gorenje

EN

USER MANUAL

TUMBLE DRYER

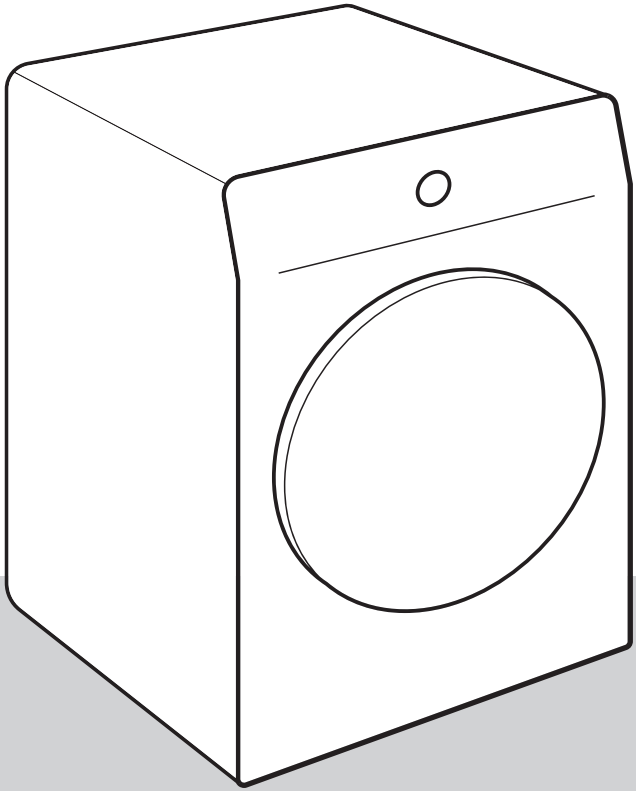

Life is complicated today. Let's make at least laundry care simple! Your new dryer uses innovative technology and the latest achievements in laundry care to help you simplify your daily household chores.
The technology offers the gentlest care for any garment, with minimum creasing. Moreover, your new dryer is also friendly to the environment as it uses power in the most economical way possible.

This dryer is intended solely for household use. Please do not use it to dry clothes that are not suitable for machine drying.

The following symbols are used throughout the manual and they have the following meanings:


INFORMATION!
Information, advice, tip, or recommendation


WARNING!
Warning – general danger


ELECTRIC SHOCK!
Warning – danger of electric shock


HOT SURFACE!
Warning – danger of hot surface


DANGER OF FIRE!
Warning – danger of fire


It is important that you carefully read the instructions.

Contents

1. SAFETY PRECAUTIONS 5
1.1 Use in accordance with regulations 6
1.2 Installation and connection 6
1.3 Proper use 8
1.4 Child safety 10
1.5 Danger of hot surface 11

2. ENVIRONMENTAL PROTECTION 13
2.1 Disposal of packaging 13
2.2 General advice 13
2.3 Disposal of the end-of-life appliance 13

3. DESCRIPTION OF THE DRYER 14
3.1 Dryer overview 14
3.2 Dimensions of the dryer 15
3.3 Opening the dryer door 16
3.4 Technical data 17
3.5 Control unit 20

4. INSTALLATION AND CONNECTION 24
4.1 Before the first installation and during subsequent transport 24
4.2 Dryer placement 28
4.3 Draining the condensate 33
4.4 Connecting the dryer to the electricity supply 34

5. BEFORE USING THE APPLIANCE FOR THE FIRST TIME 35
5.1 Before switching on the appliance for the first time 35
5.2 First connection to a Wi-Fi network 36

6. DRYING PROCESS, STEP BY STEP (1–7) 39
6.1 Sort the laundry 39
6.2 Load the laundry into the dryer 41
6.3 Switch on the dryer 42
6.4 Choose the drying program 43
6.5 Select the additional functions 48
6.6 Start the drying programme 52
6.7 Complete the drying cycle 54

7. APPLIANCE SETTINGS AND ADJUSTMENTS 55
7.1 Saving programe and selected functions 55
7.2 Additional appliance settings 56
7.3 User settings menu 57

8. CLEANING AND MAINTENANCE 58
8.1 Cleaning the dryer exterior 58
8.2 Cleaning the lint filter 60
8.3 Cleaning of the heat exchanger 62
8.4 Emptying the condensate tank 63

9. TROUBLESHOOTING AND SERVICING 64
9.1 What to do in case of problems? 64
9.2 Display Message Table 66
9.3 Service 67

9.4 Appliance repair 68
9.5 Warranty 69
9.6 Spare parts 69

10. TIPS FOR DRYING AND ECONOMIC USE YOUR DRYER 70
10.1 Tips for optimally dried laundry 70
10.2 Preventing unpleasant odours and maintaining performance 71
10.3 Recommendations for energy-efficient drying 71

11. CONSUMPTION VALUES 72

1. SAFETY PRECAUTIONS



 **Carefully read the instructions for use before using the dryer.**
Please, do not use the dryer without reading and understanding these instructions for use first.
This appliance is not intended for use by persons (including children) with reduced physical, sensory or mental capabilities, or lack of experience and knowledge, unless they have been given supervision or instruction concerning use of the appliance by a person responsible for their safety.
These instructions for use of a dryer are supplied with different types or models of dryers. Therefore, they may include descriptions of settings or equipment that are not available in your dryer.
The maximum mass of dry textile material in kilograms to be used in the appliance.
Failure to observe the instructions for use or inappropriate use of the dryer may result in damage to the laundry or the appliance, or injury to the user. Keep the instruction manual handy, near the dryer.
Instructions for use are available on our website at www.gorenje.com.

1.1 Use in accordance with regulations

Your dryer is intended solely for household use. If the dryer is used for professional, for-profit purpose or purpose exceeding normal use in a household, or if the dryer is used by a person who is not a consumer, the warranty period shall be equal to the shortest warranty period required by relevant legislation.

1.2 Installation and connection

Follow the instructions for correct installation of the Gorenje dryer and connection to the power mains (see chapter *INSTALLATION AND CONNECTION*).

All and any repairs or maintenance tasks on the dryer should only be done by trained experts. Unprofessional repair may result in an accident or major malfunction.

⚠ **WARNING!**
The dryer may only be used with the factory-installed power cord.

⚠ **ELECTRIC SHOCK!**
A damaged power cord may only be replaced by the manufacturer, a service technician, or an authorized person.

After installation, the dryer should stand still for two hours before it is connected to the power mains.

⚠ **WARNING!**
Do not connect the dryer to power mains using an external switching device such as a programme timer, or connect it to power mains that is regularly switched on and off by the power supply provider.

The dryer shall not be connected to the power mains using an extension cord.

Do not connect the tumble dryer to an electrical outlet intended for an electric shaver or a hair dryer.

In case of a defect, only use approved spare parts by authorized manufacturers.

In case of incorrect dryer connection, incorrect use, or servicing by an unauthorized person, the user shall bear the cost of any damage as such damage shall not be covered by warranty.

Always use the hoses supplied with the dryer.

Install the dryer in a room with adequate ventilation and a temperature between 15 °C and 25 °C.

At least two persons are required to install the tumble dryer on top of a washing machine.

Place the dryer on a level and stable solid (concrete) base.

The appliance must not be installed behind a lockable door, a sliding door or a door with a hinge on the opposite side to that of the tumble dryer, in such a way that a full opening of the tumble dryer door is restricted.

Never block the air exhaust (evacuation opening).

For appliances with ventilation openings in the base, a carpet must not obstruct the openings.

The air in the room where the dryer is installed may not contain dust particles.

Adequate ventilation has to be provided to avoid the back flow of gases into the room from appliances burning other fuels, including open fires.

The lint must not to be allowed to accumulate around the tumble dryer.

In the appliance enclosure or in the built-in structure, keep ventilation openings clear of obstruction.

The appliance may not be in contact with a wall or adjacent furniture.

After installation, wait for 24 hours before using the dryer. If the dryer has to be laid down on one of the sides during transport or servicing, place it with its right side, viewing from the appliance front, downwards.

1.3 Proper use

Do not dry unwashed items of laundry in the tumble dryer.

Items that have been soiled with substances such as cooking oil, acetone, alcohol, petrol, kerosene, spot removers, turpentine, waxes and wax removers should be washed in hot water with an extra amount of detergent before being dried in the tumble dryer.

Items such as foam rubber (latex foam), shower caps, waterproof textiles, rubber backed articles and clothes or pillows fitted with foam rubber pads should not be dried in the tumble dryer.

Fabric softeners, or similar products, should be used as specified by the fabric softener instructions.

⚠ **DANGER OF FIRE!**
Remove all objects from pockets such as lighters and matches.

If the condensate tube is blocked or clogged, then tumble dryer operation is stopped (see chapter *Start the drying programme/Full condensate tank*).

Before moving the dryer or before storing it in a non-heated room during the winter, the condensate tank has to be emptied.

That the lint filter has to be cleaned frequently, if applicable. Clean the dryer filters after each drying cycle. If you have removed the filters, replace them before the next drying cycle.

Do not use any solvents or cleaning agents that could damage the dryer (please observe the recommendations and warnings provided by the manufacturers of the cleaning agents).

Never add chemicals or fragrances into the condensate tank (see chapters *DESCRIPTION OF THE DRYER*; *CLEANING AND MAINTENANCE / Emptying the condensate tank*).

After the drying process, unplug the dryer power cord from the power outlet.

The dryer uses a heat pump system to heat the air.

The system consists of a compressor and a heat exchanger. When the dryer is started, compressor operation (the sound of flowing liquid) or flow of refrigerant may be louder as long as the compressor operates. This is not a sign of malfunction and it will not affect useful life of the dryer. In time and with use of the dryer this noise will become quieter.

The warranty does not cover consumables, minor deviations in colour, increased noise that results from appliance age and which does not affect the functionality of the dryer, and aesthetic defects on components, which do not affect the dryer's functionality and safety.

1.4 Child safety

⚠ **WARNING!**
Children should be supervised to ensure that they do not play with the appliance.

Children of less than 3 years should be kept away unless continuously supervised.

Prevent your children and pets from entering the dryer drum.

Before closing the dryer door and running the programme, make sure there is nothing except laundry in the drum (e.g. if a child climbed into the dryer drum and closed the door from the inside).

Activate the child lock. See chapter *APPLIANCE SETTINGS AND ADJUSTMENTS / Additional appliance settings / Child Lock*.

The dryer is made in compliance with all relevant safety standards.

This appliance can be used by children aged from 8 years and above and persons with reduced physical, sensory or mental capabilities or lack of experience and knowledge if they have been given supervision or instruction concerning use of the appliance in a safe way and understand the hazards involved.

Children shall not play with the appliance.

Cleaning and user maintenance shall not be made by children without supervision.

1.5 Danger of hot surface

⚠ HOT SURFACE!
At higher drying temperatures, the door glass will heat up. Be careful to avoid burns. Make sure children do not play near the door glass.

The back of the dryer may get very hot during operation. Wait for the dryer to cool down completely before touching its back side.

If you open the dryer door during the drying process, the clothes may be very hot and there is a risk of burning.

Never stop the drying process before it is completed; if you do interrupt the cycle for any reason, be careful when removing the laundry from the drum as it is very hot. Quickly remove the laundry from the drum and spread it to allow it to cool down as quickly as possible.

⚠ DANGER OF FIRE!
Only use the dryer to dry laundry that was washed with water. Do not dry any laundry that was washed or cleaned with flammable cleaners or substances (such as gasoline, trichloroethylene etc.) as this may result in an explosion.

The tumble dryer is **not to be used** if industrial chemicals have been used for cleaning.

The dryer is protected with an automatic switch-off system in case of overheating. This system will switch off the dryer if the temperature is too high.

If the net filter is clogged, the overheating automatic switch-off system may be activated. Clean the filter, wait for the dryer to cool down, and try running it again. If the dryer still fails to start, call a service technician.

Do not damage the refrigerant circuit.

The refrigerant R290 in this appliance is environmentally friendly yet combustible and may ignite if it comes into contact with open flames or ignition sources. Keep naked flames and ignition sources away from the appliance.

2. ENVIRONMENTAL PROTECTION

2.1 Disposal of packaging

Once you have unpacked the appliance, we advise you to recycle all packaging materials. Dispose of them in the appropriate containers or take them to a local collection center.

2.2 General advice

to ensure your appliance works as efficiently and lasts as long as possible, we recommend that you:

- observe the recommended nominal load for each drying programme (see chapter *DRYING PROCESS, STEP BY STEP (1–7)/Choose the drying program*),
- ensure that the laundry is properly spun before drying,
- clean the appliance regularly (see chapter *CLEANING AND MAINTENANCE*).

This will help protect the environment and save natural resources.

2.3 Disposal of the end-of-life appliance

DISPOSAL



Packaging is made of environmentally friendly materials that can be recycled, disposed of, or destroyed without any hazard to the environment. To this end, packaging materials are labelled appropriately.

The symbol on the product or its packaging indicates that the product should not be treated as normal household waste. Take the product to an authorized collection centre for waste electric and electronic equipment processing.

When **disposing** of the appliance at the end of its useful life, remove all power cords, and destroy the door latch and switch to prevent the door from locking or latching (child safety).

Correct **disposal** of the product will help prevent any negative effects on the environment and health of people, which could occur in case of incorrect product removal. For detailed information on removal and processing of the product, please contact the relevant municipal body in charge of waste management, your waste disposal service, or the store where you bought the product.

3. DESCRIPTION OF THE DRYER

In this chapter, you will get to know your dryer, including:
- its appearance,
- its dimensions,
- how to open the dryer door,
- the location of the technical specifications and other relevant information,
- the layout and functions of the appliance's control panel.

3.1 Dryer overview

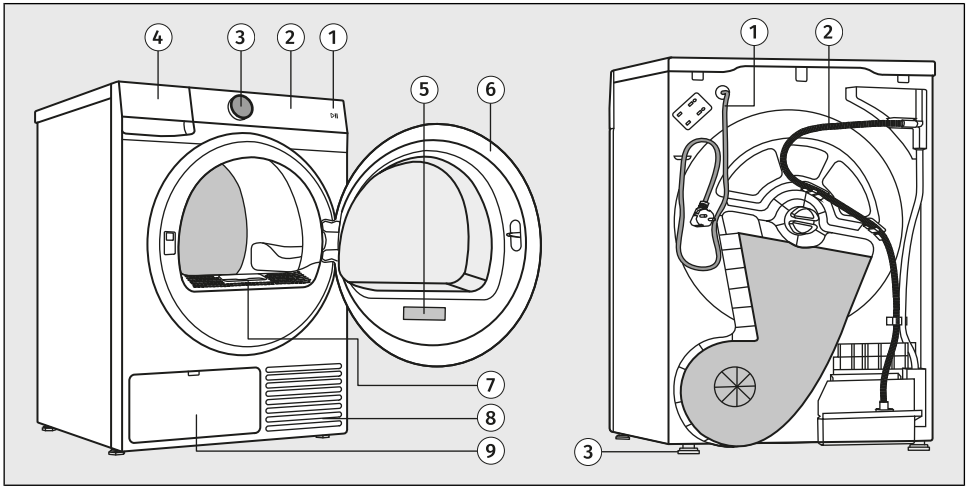

FRONT
1. Start key *Start*/*Pause*
2. Touch control unit
3. Button for switching the appliance on and off *On*/*Off* and for programme selection (hereinafter referred to as the **selector**)
4. Condense water tank
5. Rating plate
6. Door
7. Lint filter
8. Air vent
9. Heat exchanger

BACK
1. Power cord
2. Condensate discharge hose
3. Adjustable feet

3.2 Dimensions of the dryer

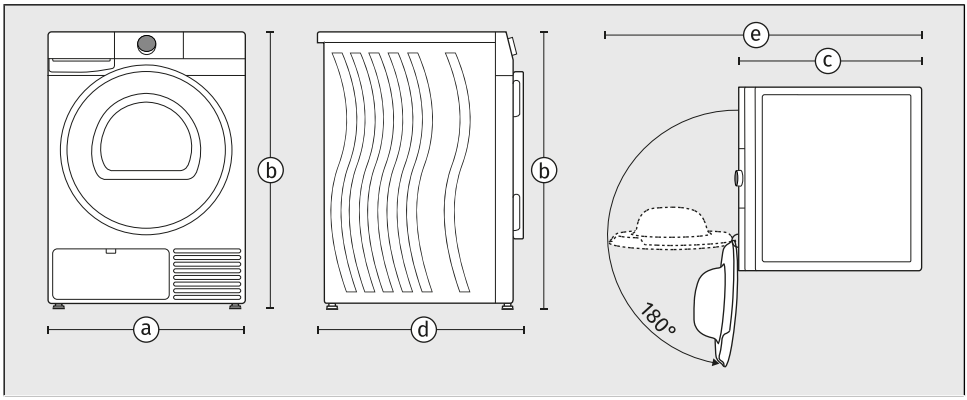

a – width of the appliance: **600 mm**
b – height of the appliance: **850 mm**
c – depth of the appliance's top surface: **625 mm**
d – depth with door closed: **655 mm**
e – depth with door open: **1110 mm**

NOTE!
The depth of your dryer Gorenje is an important specification for possible stacking with a washing machine Gorenje. (See chapter *INSTALLATION AND CONNECTION*/*Dryer placement*.)

3.3 Opening the dryer door

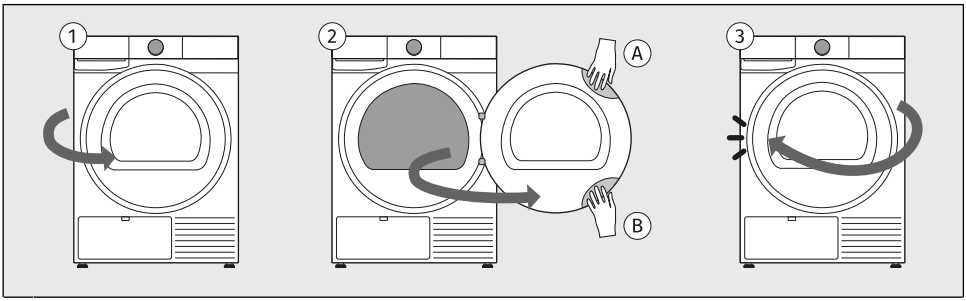

1 The dryer door is hinged on the right side of the appliance and opens from the left side.

2 Place your hand in the recess on the top left side of the door. (The recess is not visible from the front.)
When the dryer is stacked on top of the washing machine, use the recess on the bottom left side of the door to open.
Pull the door towards you.

3 Close the door in reverse order until it locks into place.

3.4 Technical data

Technical data on the rating plate

Rating plate with basic information about the dryer is located on the inner side of the dryer door (see the beginning of this chapter).

The rating plate contains various technical details about your appliance. An important element is the **QR koda**, which provides access to a website where you can find additional information about your appliance, as well as all relevant documentation, such as the user manual, declaration of conformity, product information sheet, consumption data and the energy label, and after-sales support information. You will also need the QR code to connect the appliance for remote control.

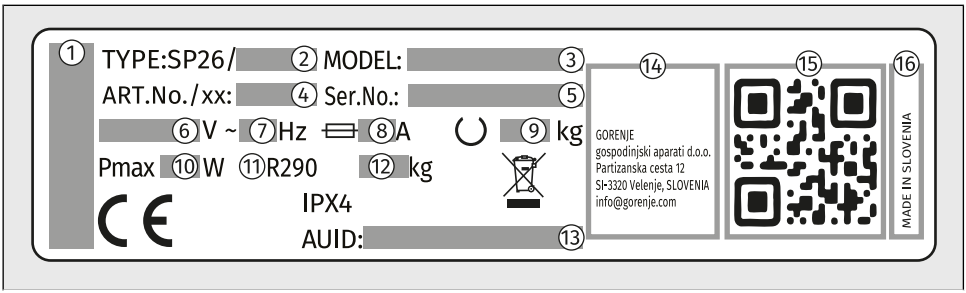

1 – brand of the appliance
2 – type designation of the appliance
3 – model designation of the appliance
4 – the article number/service index (you will need them when contacting customer service)
5 – serial number of the appliance (you will need them when contacting customer service)
6 – rated voltage (V)
7 – frequency (Hz)
8 – maximum current consumption (A)
9 – maximum rated load (kg)
10 – maximum nominal power (W)
11 – Refrigerant type
12 – Quantity of refrigerant
13 – unique AUID number
14 – manufacturer's address
15 – unique QR code (required when connecting the appliance to a Wi-Fi network)
16 – country of origin

Link to the EU EPREL database

From 1 March 2021, information on energy labelling and ecodesign requirements is available in the EU EPREL product database.

The QR code on the energy label supplied with the appliance contains a web link through which you can find your registered appliance in the EU EPREL database.
Information regarding the performance of the product can also be found in the EU EPREL database, which is accessible via the link https://eprel.ec.europa.eu where you have to enter the model and product number; both are indicated on the rating plate on the appliance. On the website www.theenergylabel.eu you can find more detailed information about the energy label.

Keep the energy label in case it is needed in the future, together with the user manual and other documents supplied with this appliance.

Compliance information

Radio equipment type	
(depending on the model)	HL3215STG HLW3215-TG HLW3215-TG01
Wi-Fi	
Operating frequency range	2.4000 GHz – 2.4835 GHz
Maximum output power	≤10 dBm/MHz (EIRP) (Antenna gain <10 dBi)
Maximum antenna gain	Gain: 0 dBi
Bluetooth	
Operating frequency range	2.400 GHz – 2.4835 GHz
Carrier output	6 dBm (≤ 10 dBm)
Emission type	F1D

Declaration of conformity

The company declares that the device with the function **Connect**Life complies with the essential requirements and other relevant provisions of Directive 2014/53/EU. The detailed Declaration of Conformity can be found at the web address https://auid.connectlife.io on the page of your device among the additional documents.

Wi-Fi Network Requirements and Recommendations

1. Access Point and Coverage

- Standard **2,4 GHz Band Wi-Fi network IEEE 802.11b/g/n** required,
- use a **stable router or access point** with adequate signal strength (minimum **–60 dBm**) at the appliance installation location,
- avoid excessive channel overlap; use non-overlapping 2,4 GHz channels (1, 6, or 11) and 20 MHz channel width,
- Wi-Fi network capacity must be dimensioned appropriately in multi-appliance installations.

2. Security and Encryption

- Network must use **WPA2-PSK (AES)** or WPA/WPA2 encryption,
- open (unencrypted) networks are not supported,
- appliance and mobile device must be connected to the **same SSID during initial setup**,
- continuous internet connection is required for operation of remote features.

3. Unsupported Network Types

- Networks with **captive portals** (browser-based login pages) or public Wi-Fi networks (hotel, guest hotspot with login, etc.),
- networks requiring **proxy servers or VPN tunnels**,
- networks with strict MAC filtering (unless appliance MAC is manually whitelisted),
- networks enforcing client-based default-deny access control (unless appliance is manually granted access).

Low standby mode

If you do not run any program or choose any settings after switching on the dryer, the display unit will be switched off after 5 minutes and switched to stand-by mode in order to save energy.

The display unit will be reactivated if you rotate the selector or press the *On/Off* button, or open the dryer door. If you do not do anything for 5 minutes after the end of a programme, the display unit will be switched off to save power.

P o = weighted power when off [W]	< 0,5
P l = weighted power when in standby [W]	< 0,5
T l = standby time [min]	5,00

INFORMATION!
Low mains voltage and different drying loads may affect the drying time; the remaining time displayed is adjusted accordingly during the drying process.

INFORMATION!
Appliance with a wireless connection uses less than 2 W of electric energy in standby mode.

INFORMATION!
When the appliance is in Remote Control mode, the symbol will remain illuminated even after it enters standby mode.

3.5 Control unit

Control panel overview

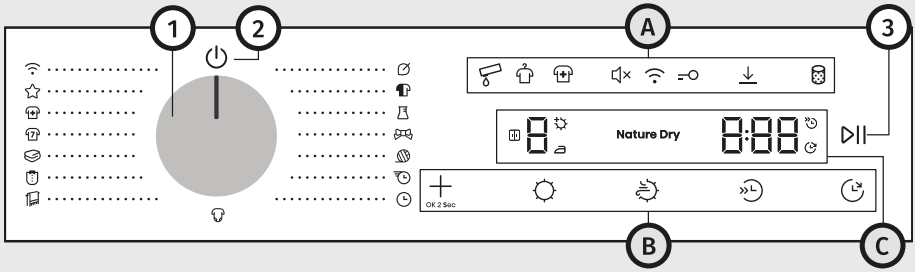

The control unit is located on the upper right part of the appliance.
With it, you will be able to control the operation of the appliance:
- switch the appliance on or off,
- select the drying programme and additional options,
- adjust additional appliance settings,
- start and stop the programme cycle,
- identify possible malfunctions and errors, and perform basic troubleshooting.

1	**Button for switching the appliance on and off and for programme selection (hereinafter referred to as the *selector*)** To select a program, rotate the selector to the desired program. See chapter *DRYING PROCESS, STEP BY STEP (1–7) / Choose the drying program*
2	**Symbol for switching the appliance on and off** To switch on the appliance, rotate the selector to any position. To switch off the appliance, rotate the selector to the position ⏻.
3	**Key *Start/Pause*** (lights up when active) To start, pause, or resume a program, press key *Start*/*Pause*.
A	**Additional settings symbols**
B	**Function keys**
C	**Display unit**

Additional settings symbols (4–11)

The symbols light up when activated. The lighting can be full or partial.

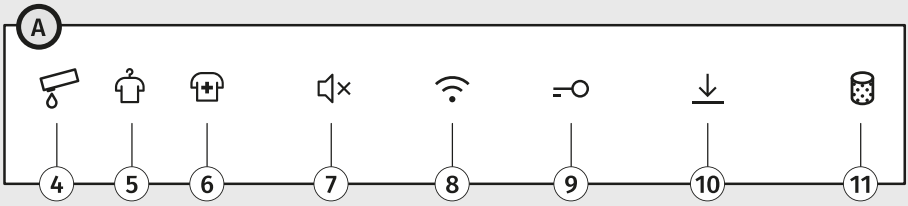

4	**Full condensate tank**
5	**Anti crease**
6	**Disinfect**
7	**Sound On/Off**
8	**Remote control**
9	**Child Lock**
10	**Settings saved**
11	**Clean the filter**

Function keys (12–16)

The function keys are finger-press-activated. Some functions can be selected by pressing two keys at the same time.

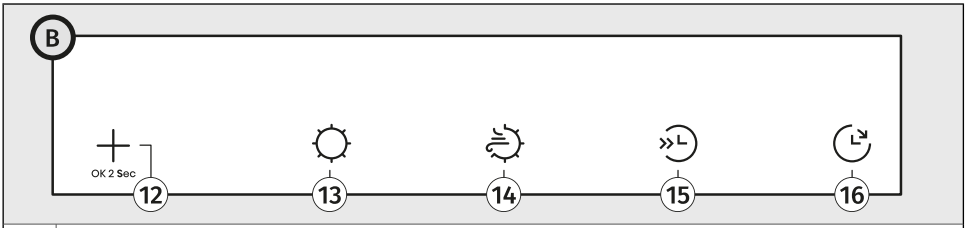

12	**Extras**
13	**Dry target**
14	**Nature dry**
15	**Half load**
16	**Delay end**

Display unit (i–iii, 17-21)

The display provides the following information:
- various settings and animations, the sound level, etc.,
- the dryness level and drying mode,
- remaining time until the end of the drying cycle,
- information about malfunctions and error messages.

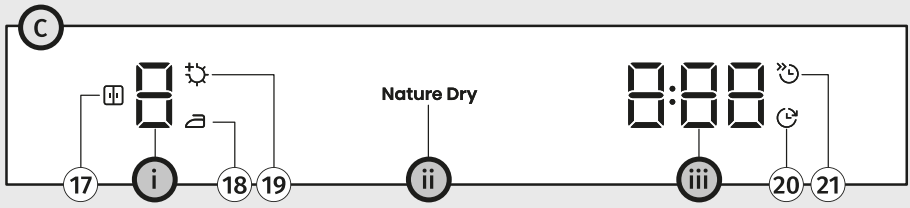

i	**Dryness level indicator**
17	Symbol for *Dry target* / *Storage* (lights up when active)
18	Symbol for *Dry target* / *Iron* (lights up when active)
19	Symbol for *Dry target* / *Extra dry* (lights up when active)
ii	**Display unit Nature dry**
iii	**Display for total drying time or delay end of drying**
20	Symbol for *Delay end* (lights up when active)
21	Symbol for *Half load* (lights up when active)

4. INSTALLATION AND CONNECTION

This chapter describes how to:
- handle the dryer before the first installation and during any subsequent transport,
- position the dryer,
- set up the condensate drainage,
- connect the appliance to the electrical network.

INFORMATION!
Remove all packaging. When removing the packaging, make sure not to damage the dryer with a sharp object.

4.1 Before the first installation and during subsequent transport

INFORMATION!
Before using the dryer for the first time, it is necessary to remove the transport protection. Keep the transport protection, as you will need it if the appliance is transported again.

INFORMATION!
After installation, let the appliance rest still for 24 hours before using it.

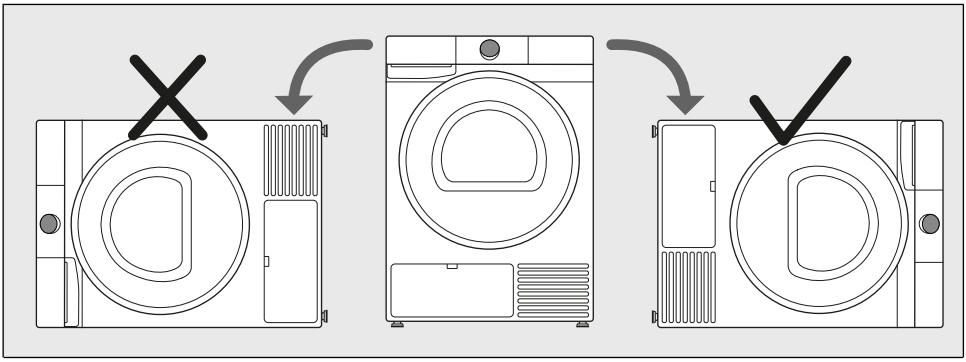

If the dryer has to be laid down on one of the sides during transport or servicing, place it with its right side, viewing from the appliance front, downwards.

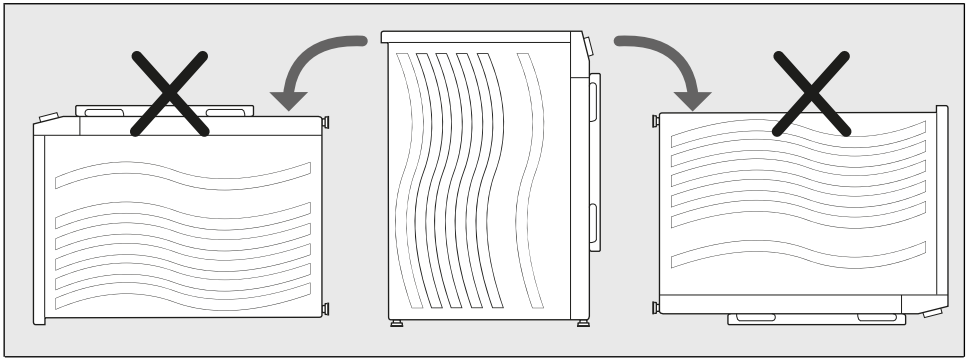

Never turn the dryer upside down or lay it on its back or front!

Remove the transport securing device

WARNING!
Before first use, make sure to remove the transport safety device to prevent damage when switching on the dryer. Warranty shall be void in cases of such damage!

Before using the appliance, remove the transport protection designed to secure the appliance during transport.

The transport protection is placed inside the drum of the dryer and secured at the top in a protective bag.

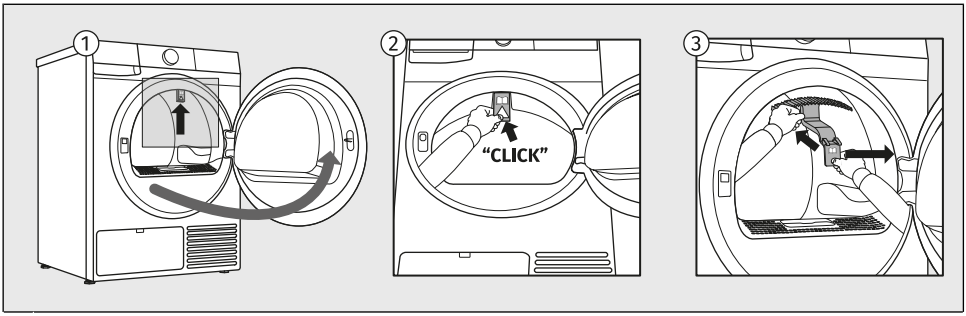

1 Open the dryer door.

2 Press the marked part of the transport protection by hand toward the inside of the appliance to release it from its position.

3 Then remove the transport protection from the appliance.

If you need to transport the appliance, reinstall the transport protectionin the door opening rim to prevent damage caused by shaking during transit. When reinstalling the transport protection, slightly lift the drum from the inside and press the protection firmly between the drumand the inner edge of the door opening.

INFORMATION!
If the transport protection is not used, the appliance may be damaged during transport, and warranty claims will not be accepted.

Moving and transport after installation

After every drying cycle, a small amount of condensed water will remain in the dryer. Switch on the dryer and choose one of the programmes, then let the appliance operate for approximately half a minute. This will pump out the remaining water and prevent damage to the dryer during transport.

INFORMATION!
Tilt the dryer to the right side when carrying or transporting it in a horizontal position.
Install the transport safety device in the dryer (see previous chapter). If the transport safety device has been lost, it can be ordered from the manufacturer.

ELECTRIC SHOCK!
After transport, the dryer should be left to stand still for at least two hours before it is connected to the power mains. The appliance should be installed and connected by a trained technician.

ELECTRIC SHOCK!
Carefully read the instructions for use before connecting the dryer. Repair or any warranty claim resulting from incorrect connection or use of the dryer shall not be covered by the warranty.

INFORMATION!
If the appliance was not transported in compliance with the instructions, the dryer should be left to stand still at least 24 hours before it is reconnected to the power mains.
Failure to do so may result in a heat pump failure which shall not be covered by the warranty.
Be careful not to damage the cooling system (see the next chapter).

4.2 Dryer placement

Selecting the room

INFORMATION!
Floor on which the dryer is placed must have a concrete base. It should be clean and dry; otherwise, the dryer may slide. Also clean the adjustable feet.

INFORMATION!
The dryer must stand level and stable on a solid base.

INFORMATION!
If the dryer is placed on an elevated stable base, the dryer has to be additionally secured against tipping.

The room in which you will install the dryer should be sufficiently ventilated, with a temperature between 15°C and 25°C. Dryer operation at a lower environment temperature may result in condensate accumulation in the dryer interior. Do not place the dryer into a place where there is danger of freezing. Frozen water in the condensate tank and pump may damage the dryer.

The dryer emits heat. Therefore, do not place it in a very small room, as the drying process may take longer due to limited amount of available air.

Lighting in the room should be sufficient to allow reading the information on the display unit on the control panel.

WARNING!
The appliance must not be installed behind a lockable door, a sliding door or a door with a hinge on the opposite side to that of the tumble dryer, in such a way that a full opening of the tumble dryer door is restricted.

WARNING!
For appliances with ventilation openings in the base, a carpet must not obstruct the openings.

Leveling the appliance

It is important to level your dryer to prevent excessive vibration or noise when the appliance is operating. This can be achieved by adjusting the dryer's feet.

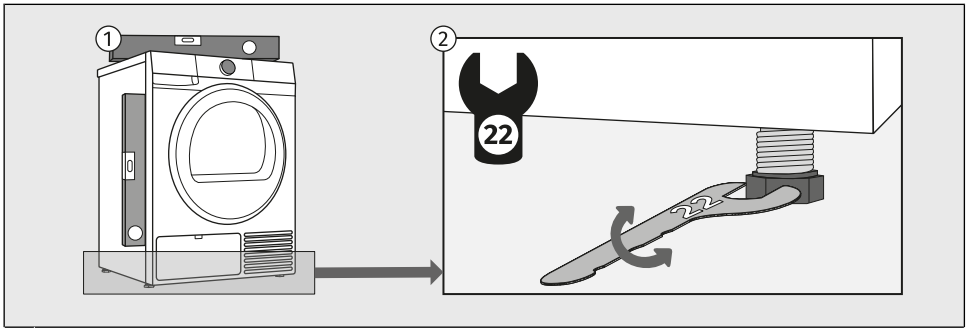

1 Use a spirit level and spanner 22. The spanner is not supplied.

2 Level the dryer in longitudinal and traverse direction by rotating the adjustable feet, which allow levelling up to +/- 1 cm.

INFORMATION!
Sometimes, unusual or louder noise may appear during appliance operation; these are mostly the result of improper installation.
Incorrect levelling of the dryer with the adjustable legs may cause vibration, appliance sliding across the room, and loud operation. Incorrect levelling of the dryer shall not be subject to warranty.

Combination of washing machine and tumble dryer installation

Freestanding installation

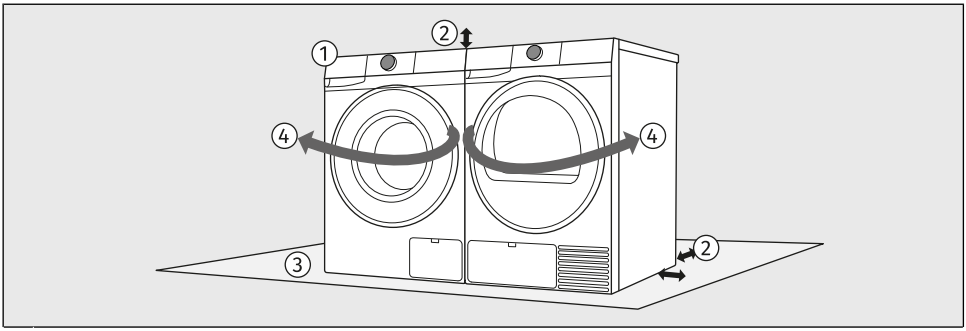

1 The washing machine and the dryer can be placed next to each other.

2 When positioning the appliance, observe the required clearances from the top and side surfaces of the washing machine and tumble dryer. (See chapter *Dryer installation clearances when installing in a room*.)

3 The surface on which the washing machine and/or dryer is placed should be clean and level.

4 Due to the door opening direction and the handling process of laundry, it is recommended to place the washing machine on the left and the tumble dryer on the right.

Stacked installation

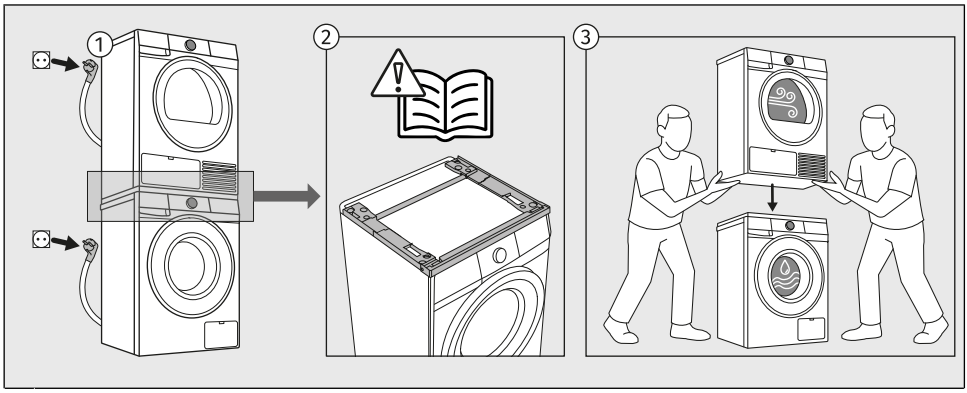

1 Certain dryers and washing machines of the Gorenje brand can be installed in a stacked configuration. In this case, a so-called Stacking Kit (*Dryer-to-washer Installation Kit*, hereinafter referred to as the *Stacking Kit*) must be used.

2 The *Stacking Kit* can be purchased from an authorised service centre. Detailed installation instructions are supplied with the *Stacking Kit*.
It is available in white (product code: 20018019 SKGUP1) or black (product code: 20018049 SKGUP1B).
For information on the compatibility of different types of washing machines and dryers for stacking, consult your retailer or check the compatibility details in the technical data sheet of the *Stacking Kit*.

3 The floor surface on which the washing machine is placed must be clean and level. The surface of the washing machine on which the *Stacking Kit* is installed must also be clean.
At least two persons are required to install the tumble dryer on top of a washing machine.
Never place the washing machine on top of the dryer!

WARNING!
When installing the washing machine and dryer in a stacked configuration, the installation instructions for the *Stacking Kit* must be strictly followed. The stacked appliances must be secured to the wall using the dedicated brackets supplied with the *Stacking Kit* to prevent tipping over and possible injury.
Certain washing machine depths are not suitable for stacking. A washing machine depth of less than 54 cm does not allow a dryer to be installed on top of the washing machine.

Dryer installation clearances when installing in a room

For safety reasons, the minimum distance between the back of the appliance and the wall must be at least 5 cm, and the distance between the appliance and any furniture above or beside it must be at least 10 cm.

When positioning the dryer, also consider other elements in the room, such as doors or windows and how they open into the space. The dryer must have sufficient clearance for the door to open. See chapter *DESCRIPTION OF THE DRYER/Technical data*.

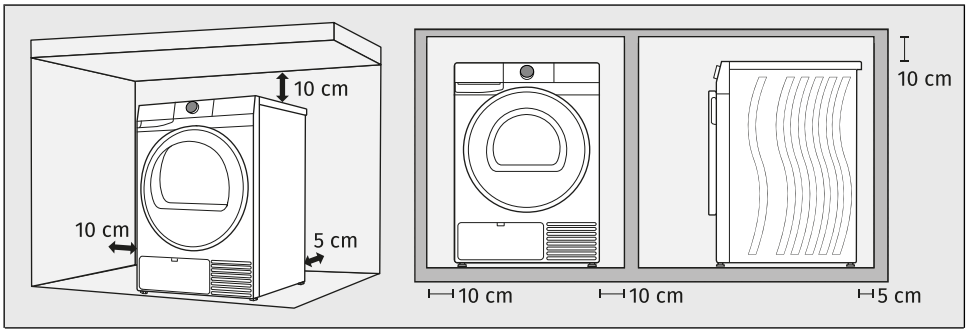

Observe the required minimum clearances as shown in the picture.

INFORMATION!
The dryer may not be in contact with a wall or adjacent furniture. For optimum dryer operation, we recommend observing the clearance from the walls as indicated in the figure. In case of failure to heed the required minimum clearance, the dryer may overheat.

INFORMATION!
Vents on the back wall and the air exhaust opening on the front side of the dryer should never be obstructed.
It is not recommended to install the dryer under a countertop.

4.3 Draining the condensate

Moisture from the laundry is extracted as humid air passes through the heat exchanger and collects in the condensate container.

During the drying process, an indicator light (symbol is lit on the display unit) warns when the condensate tank is full and needs to be emptied.

To avoid emptying the condensate tank, run the condensate discharge hose located at the back of the appliance directly into a drain.

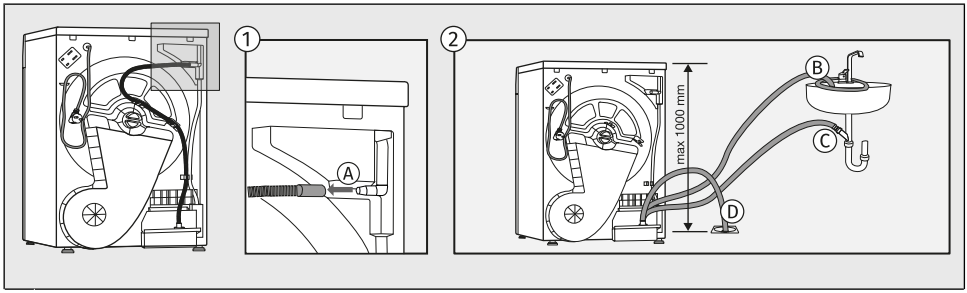

1 Remove the long ribbed hose from the connector (A).

2 The drain hose can be routed to the sink drain by attaching it to the tap (B), sink trap (C) or floor drain (D).
Then, the water is pumped directly into a washbasin, a siphon, or a floor drain.

INFORMATION!
If you decide to run the condensate drain hose into a drain, make sure the hose is securely fastened. This will prevent any water spillage which could result in unexpected damage.

WARNING!
Do not pull the drain hose, and make sure it is not under tension, clamped, or bent.
Always use the hoses supplied with the dryer.

4.4 Connecting the dryer to the electricity supply

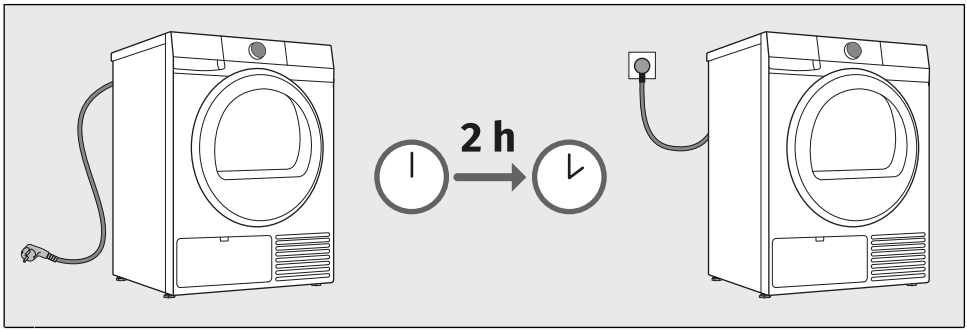

ELECTRIC SHOCK!
We recommend using over-voltage protection to protect the appliance in case of a lightning strike.

WARNING!
After installation, the dryer should stand still for two hours before it is connected to the power mains; this allows the dryer to stabilize.

Connect the dryer to a grounded power outlet. After installation, the wall outlet should be freely accessible. The outlet should be fitted with an earth contact (in compliance with the relevant regulations).

Information on your dryer is indicated on the rating plate (see chapter *DESCRIPTION OF THE DRYER/Technical data*).

WARNING!
The dryer shall not be connected to the power mains using an extension cord.

INFORMATION!
Do not connect the tumble dryer to an electrical outlet intended for an electric shaver or a hair dryer.

INFORMATION!
Any repair and maintenance pertaining to safety or performance should be done by trained experts.

INFORMATION!
A damaged power cord may only be replaced by a person authorized by the manufacturer.

5. BEFORE USING THE APPLIANCE FOR THE FIRST TIME

This chapter describes how to:
- what you need to do before you turn on your appliance for the first time,
- how to connect the appliance to a Wi-Fi network for the first time.

5.1 Before switching on the appliance for the first time

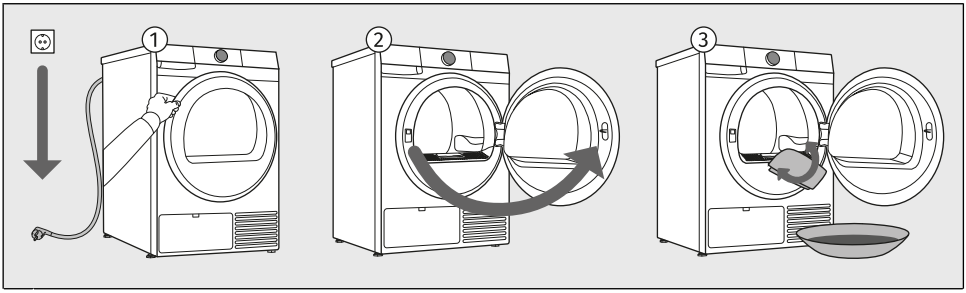

1 Disconnect the dryer from the power mains.

2 Open the door towards yourself.

3 Clean the dryer drum with a soft, damp cotton cloth and water.

WARNING!
Do not use any solvents or cleaning agents that could damage the dryer (please observe the recommendations and warnings provided by the manufacturers of the cleaning agents).

5.2 First connection to a Wi-Fi network

Application ConnectLife

ConnectLife is a smart home platform that connects people, devices and services. The **Connect**Life application includes advanced digital services and carefree solutions that allow users to monitor and control appliances, receive notifications from a smartphone, and update software (supported features may vary depending on your appliance and the region/country in which you are located).

Install the app

To connect your smart device, you need a home 2,4 GHz Wi-Fi network and a smartphone equipped with the application **Connect**Life.

You can download the **Connect**Life app for free from the Apple App Store® or Google Play™, or scan the code:

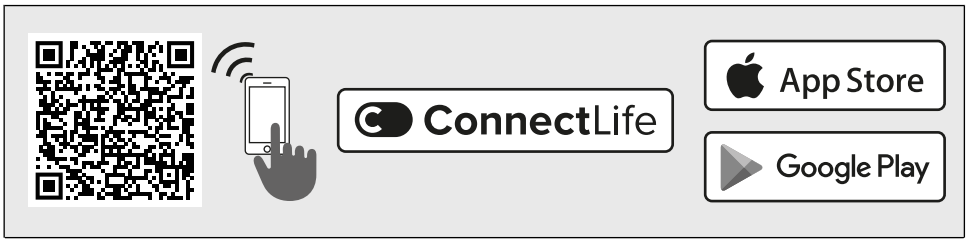

1. **Install the ConnectLife app and create an account or log in to your existing account if you already have one.**

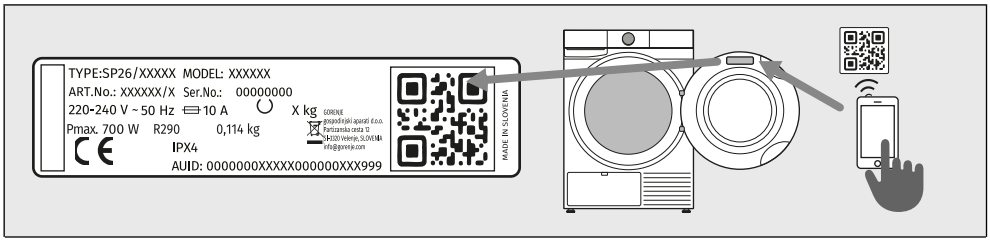

2. **In the ConnectLife app, go to the Add device menu and follow the instructions.**
Unique QR code can be found on the warranty card or on the rating plate of the appliance.
3. **After a successful connection, the appliance can be operated remotely via the application.**

How do I connect my device?

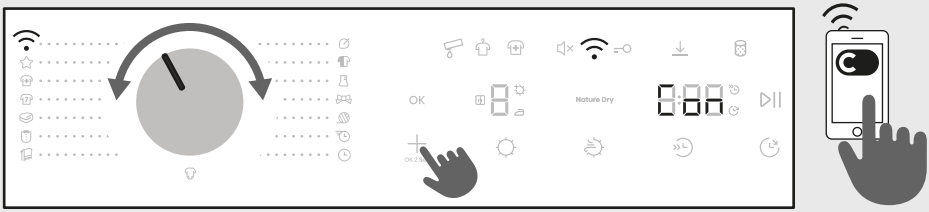

ENTER THE MENU

The appliance must be turned on; turn the selector to position ***Remote control*** .

Press and hold the + key on the device until the function you want to activate (Con / PAr / UnP / OFF) appears on the display.

To activate the desired function, release the + button while the function is displayed on the display.

CONNECTION BETWEEN THE APPLIANCE AND THE APPLICATION

Con **CONNECTION SETUP** (from 3 to 6 sec)

When you release the button, the function is activated, the countdown of 5 minute(s) begins, continue your activities in the application.

PAr **PAIRING** (from 6 to 9 sec)

When you release the button, the function is activated, the countdown of 3 minute(s) begins, continue your activities in the application.

UnP **UNPAIRING** (from 9 to 12 sec)

When you release the button, the function is activated, the countdown of 1 minute begins.
This step will remove all active users of the appliance. If you want to operate the appliance remotely again, you will need to repeat the process of adding a user PAr.

OFF **OFF** (*Off Wi-Fi*) (from 12 to 15 sec)

When you release the button, the appliance's Wi-Fi connection is switched off.
All appliance settings remain unchanged.

EXITING MENU

Exit the menu by holding down the + button for more than 15 sec.

INFORMATION!
You can also control your appliance from your phone if you are not connected to the same Wi-Fi network as your appliance (the phone only needs an active internet connection). This means you can also control your appliance when you are away from home.

INFORMATION!
You can operate the appliance with multiple devices. You can also control and monitor the operation of the appliance with any phone connected to the appliance, regardless of which user has initiated the washing cycle. The appliance can be connected to/controlled simultaneously with several **Connect**Life user accounts.

INFORMATION!
After you have started the appliance from your phone, a person located next to the appliance can take over and manually turn off or control the appliance; the app will notify you in such case. In such case, controlling the appliance remotely from your phone is no longer possible. If you wish to control the appliance from your phone again, all required steps must be repeated.

Which Wi-Fi router can be used?
Only 2,4 GHz networks are supported. If the **Connect**Life app cannot find your local network during the connection set-up process, check the following:

- your router is operating at the frequency of 2.4 GHz,
- your network is hidden, and
- your signal is strong enough.

Do you have more questions?
Please visit us at **www.connectlife.io** or contact us at **hello@connectlife.io**.

Remotely upgrading the software
Check the software update options in the app **Connect**Life.

6. DRYING PROCESS, STEP BY STEP (1–7)

This chapter describes the step-by-step laundry drying process:
step 1: sort the laundry,
step 2: load the laundry into the dryer,
step 3: switch on the dryer,
step 4: select the drying programme,
step 5: select additional functions,
step 6: start the drying programme,
step 7: complete the drying cycle.

6.1 Sort the laundry

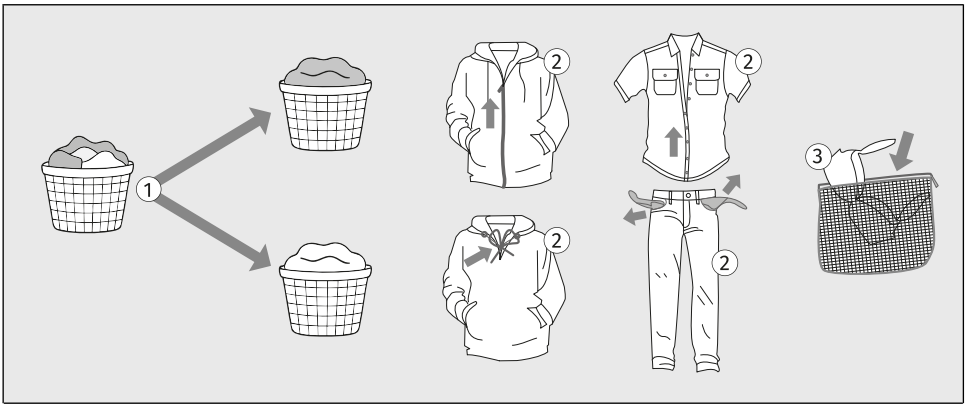

1. Sort the laundry by type and thickness of the fabric (see chapter *DRYING PROCESS, STEP BY STEP (1–7)* / *Choose the drying program*).
2. Close the buttons and zips, tie any ribbons, and turn the pockets inside out.
3. Place very sensitive clothes and small items in a special-purpose laundry washing bag. (The special-purpose laundry bag is available as an optional accessory.)

Drying laundry made of particularly delicate fabrics that may be deformed is not recommended. The following types of laundry may not be dried in the dryer as this may cause your garments to deform:

- **leather garments and other leather products,**
- **garments that are waxed or treated in any other way,**
- **garments with major wooden, plastic, or metal parts;**
- **garments with spangles;**
- **garments with metal parts subject to rusting.**

WARNING!
The manufacturer assumes no responsibility for malfunctions resulting from failure to follow these instructions, which may also affect the validity of the warranty. Service costs for damage caused by drying fabrics not recommended for tumble drying are likewise not covered.

When sorting laundry, see the table below and pay attention to the labels on the laundry.

Washing	**Drying**
The number in the basket symbol means the maximum allowed washing temperature in (°C).	The mark in the square means the drying method for the laundry.
 Normal wash	 Drying on a flat surface
 Delicate wash	 Line dry
 Very delicate wash	 Drying at a low temperature
 Hand wash only up to max. 40°C	 Drying at a high temperature
 Washing is not allowed	 Tumble drying not allowed
The line under the basket symbol indicates the level of treatment intensity: one line indicates gentle washing (less mechanical effect, lower spin speed), two lines indicate very gentle washing (e.g. wool, silk, synthetics).	If the square symbol has slanted lines, this indicates natural drying in the shade. Slanted lines can be used in combination with other symbols in the square.
Dry cleaning	**Ironing**
Dry cleaning is intended for textiles that cannot or should not be machine washed.	Steam ironing can permanently damage textiles.
 Dry cleaning with all types of solvents	 Ironing at maximum 200°C
 Dry cleaning with certain solvents (depending on the label)	 Ironing at maximum 150°C
 Professional wet cleaning	 Ironing at maximum 110°C
 Dry cleaning not allowed	 Ironing not allowed
Bleaching	
Bleaching is intended for refreshing and removing stains from textiles that are suitable for washing with bleach in a washing machine. Always follow the manufacturer's instructions.	
 Bleaching with all types of bleaching agents	 Bleaching not allowed
 Bleaching with oxygen-based bleaching agents	

6.2 Load the laundry into the dryer

Loading the dryer

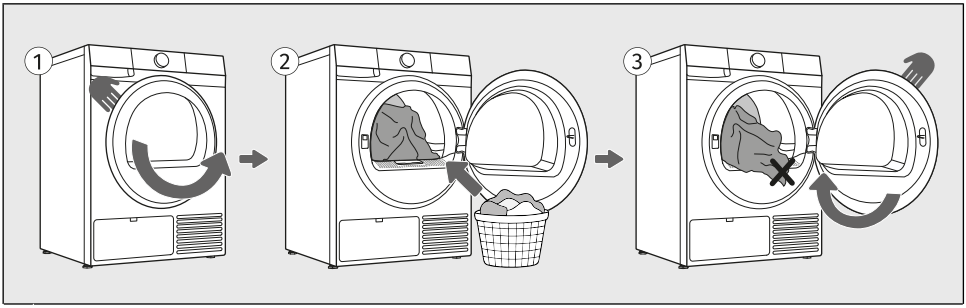

1 Open the dryer door towards you.

2 Place the laundry into the empty dryer drum. Make sure there aren't any other objects among the laundry, such as a detergent ball. Such objects could melt and cause damage to the dryer or your laundry.

3 Make sure that no garment is stuck between the door and the dryer housing. Close the dryer door.

WARNING!
The lint filter must always be inserted in its designated slot before loading or removing fabrics. This prevents any garment or other fabric from falling into the empty opening.

INFORMATION!
Do not insert laundry into the dryer if it has not been wrung or spun (recommended minimum spinning cycle: 800 rpm).

INFORMATION!
Do not overload the drum! See chapter *DRYING PROCESS, STEP BY STEP (1–7)* / *Choose the drying program* and observe the recommended nominal load for each drying programme. If the dryer drum is overloaded, the laundry will be more wrinkled and perhaps unevenly dried. When drying larger items (bedding, towels, tablecloths etc.), loosen them and then insert them into the dryer drum.

6.3 Switch on the dryer

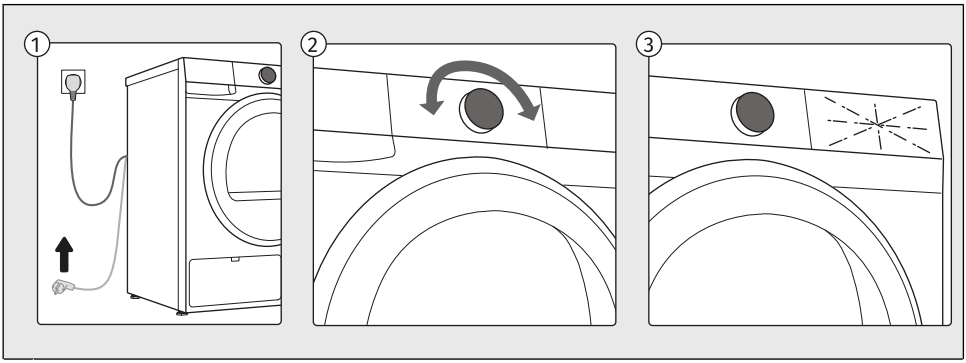

1 Connect the dryer to the power mains by plugging in the power cord.

2 To switch on the appliance, rotate the selector to any position.

3 The icons on the display light up.

6.4 Choose the drying program

Selecting a program on the control unit

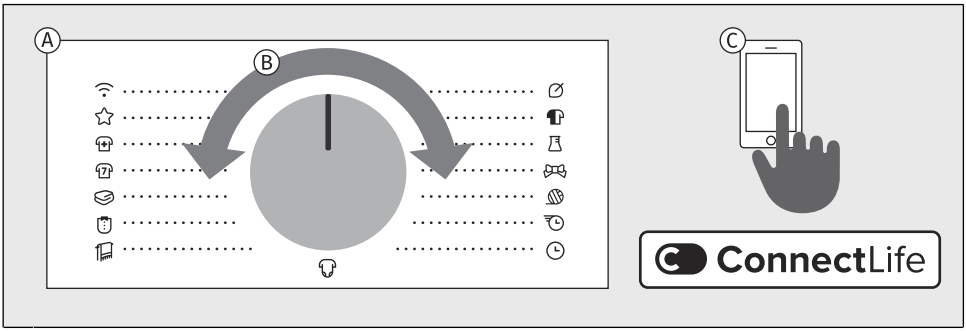

A The dryer offers drying programs indicated around the selector knob.

B Choose the drying programme by rotating the selector to the left or to the right (depending on the type and spin-dry level of the laundry).

C In addition to the programmes shown on the control panel, further programmes are available through the **Connect**Life app. Follow the instructions provided in the app.

Explanation of symbols used below:	
Maximum load	Nature Dry
Dry target	Half load
Storage - preset	Disinfect
Iron	Delay end
Extra dry	Anti crease

For detailed descriptions of the functions, see chapters *DRYING PROCESS, STEP BY STEP (1–7) / Select the additional functions*.

Drying programme selection

All programs listed on the control unit can be started on the appliance or from the app. To start a programme from the app, turn the selector knob to position *Remote control*. Close the door, then press the *Start/Pause* button. The appliance will then remain ready for app control for 24 hours. See also the following chapter.

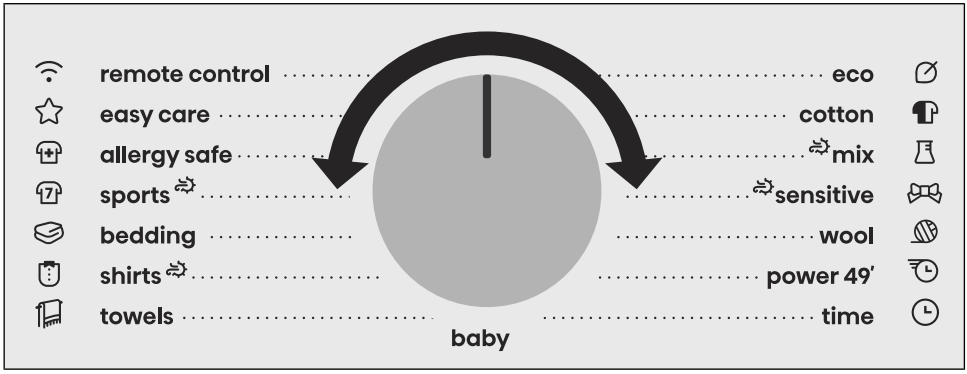

Nature Dry

The gentlest drying for delicate favourites

NatureDry is especially ideal for sensitive garments that need extra care and usually avoid the dryer. It protects colours, maintains softness, and preserves the natural feel of fabrics. By drying at just 33,8 °C (around 37 %* lower than standard drying temperatures) it gently mimics the effect of air-drying outdoors, but in half the time. Enjoy worry-free drying for your most delicate pieces.

Based on testing results from SGS laboratories. Comparison between heat pump tumble dryer on Mix program with and without NatureDry function. Measured average temperature inside laundry ***without*** *NatureDry function: 53,8 °C. Measured average temperature inside laundry* ***with*** *NatureDry function: 33,8 °C. Individual results may vary.*

Dry target

The default dryness level is medium - *Storage* (level 2).
You can also select *Iron* (level 1) or *Extra dry* (level 3).

Programs on the front panel

Program		Option of selecting additional functions
Eco*	**8 kg**	
	The Eco programme is suitable to dry wet cotton laundry, and is the most efficient programme in terms of energy consumption for drying wet cotton laundry. **The Eco programme is used to assess compliance with EU legislation on eco-design.*	

Program		Option of selecting additional functions
Cotton	**8 kg**	
	This programme is intended for drying non-delicate wet white and coloured cotton laundry.	
Mix	**4 kg**	
	The program is used for drying cotton and synthetic laundry at the same time.	
Sensitive	**1 kg**	
	Use this programme to dry highly delicate laundry made of synthetic fibres, which may be slightly moist after the drying process. We recommend using a special-purpose laundry bag.	
Wool	**2 kg**	
	This short program is intended for softening or fluffing of clothes made of wool and silk, which have to be dried thoroughly according to manufacturer's instructions.	
Power 49'	**2 kg**	
	The programme is suitable for small amounts of lightweight laundry that you want to dry quickly and efficiently. The programme duration may vary depending on the load, fabric type, and spin speed after washing.	
Time	**4 kg**	
	Use this programme for non-sensitive laundry that is still slightly moist and has to be thoroughly dried. In the time programme, remaining moisture is not detected automatically. If the laundry is still damp after the programme is complete, repeat the programme; if it is too dry and therefore creased and rough to touch, the drying time you selected was too long. You can choose the duration of the washing from 30 minut to 4h in steps of 15 minut.	
Baby	**4 kg**	
	Use this programme to dry baby clothes. Clothes dried with this programme are usually normally dry.	
Towels	**4 kg**	
	Use this programme for drying non-sensitive items (towels, kitchen cloths ...). After drying, the items will be dry and ready to be stored in the cupboard.	
Shirts	**2 kg**	
	Use this program to dry shirts and blouses. Adjusted drum rotation prevents the laundry from creasing.	

Program		Option of selecting additional functions
Bedding	**5 kg**	
	This programme is intended for drying larger textile items. At the end of the programme, the laundry will be dry and ready for storage. We recommend drying fitted sheets separately from other laundry items or together with similar pieces.	
Sports	**3 kg**	
	Use this programme for clothing with a membrane, for sportswear made of mixed materials, and breathable fabrics.	
Allergy safe	**4 kg**	
	Longer drying programme duration and overheating of the fabric results in higher drying temperature, which reduces the number of microbes and allergens on the garments. This drying programme is not suitable for delicate items and items that should not be dried in the dryer.	
Easy care	**4 kg**	
	The program is used for drying synthetic and blended textiles.	
Remote control	Use the *Remote control* programme to remotely control your appliance (using your phone). It is possible to select all programs and functions that are available for a specific program of your appliance (see sections *BEFORE USING THE APPLIANCE FOR THE FIRST TIME* / *First connection to a Wi-Fi network* and *APPLIANCE SETTINGS AND ADJUSTMENTS* / *Remote control*). In the application, you can also select additional programmes and some additional settings.	

The following washing programmes can be selected in the ConnectLife app:

Program		Option of selecting additional functions
Pillow	**2 kg**	
	Use this program to dry textiles stuffed or padded with down (pillows, duvets, jackets etc.). Dry large items separately and use the extra dry function or the time program if necessary.	
Air refresh	**2 kg**	
	This program does not use a heater. Use it to refresh your clothes. Program duration can be adjusted from 15 minutes to 4 hours (in 15-minute steps).	
Jackets / Coats	**2 kg**	

Program		Option of selecting additional functions
	This programme is intended for drying jackets and coats that are suitable for tumble drying according to the garment manufacturer's instructions.	
Jeans	4 kg	
	This programme is suitable for drying jeans and clothes with extremely thick seams.	

6.5 Select the additional functions

Choosing extra functions

Once you have selected a drying programme, you can also choose and set additional functions for certain programmes.

This is done in two or three steps:
- **selecting the function** (hereinafter referred to as **Selection**),
- **setting the function level**, if the function allows it (hereinafter referred to as **Level / Description / Display**),
- **activating the function** (hereinafter referred to as **Activation / Deactivation / Exit**).

If you do not want to select additional functions, press the *Start/Pause* button.

The individual functions are described below.

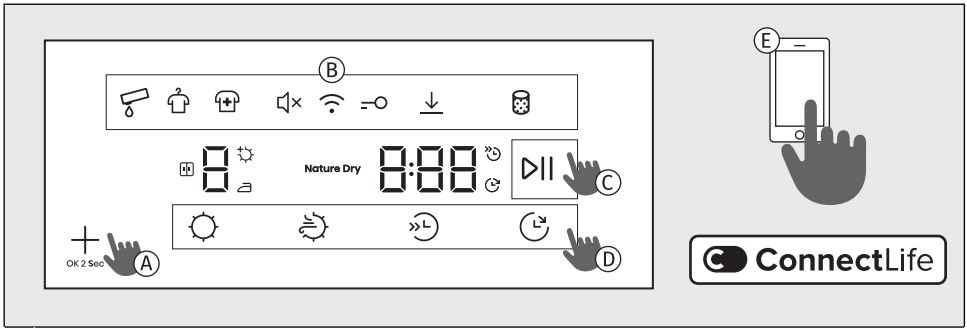

A Select additional functions by pressing the corresponding function button (see description at point **D**). Functions *Anti crease* and *Disinfect* are selected and confirmed with the + button.

B The symbol of the selected function at the top of the display will light up partially or fully. When the function is not enabled, the symbol does not light up. The function currently being selected flashes and is partially lit.
Confirm the setting by pressing and holding the + button for 2 seconds.
The symbol of the selected function lights up fully but keeps flashing. When you move to the next available function, the previously selected function stays permanently illuminated and stops flashing.
To select or set an additional function, repeat the procedure described above.

C To start the drying cycle, press the *Start/Pause* button to activate the function.

D When selecting functions directly using the buttons at the bottom of the display, additional options for will appear on the screen above the symbol.
If the function button does not allow the selected function to be set for a specific programme, the symbol flashes briefly and an acoustic signal sounds.

E You can also select additional programs in the app **Connect**Life. Follow the instructions in the app.

INFORMATION!
If you press and hold the + button for more than three seconds, you will enter the *Wi-Fi* settings (applies when *Remote control* has been selected using the selector knob.

Set of additional drying functions

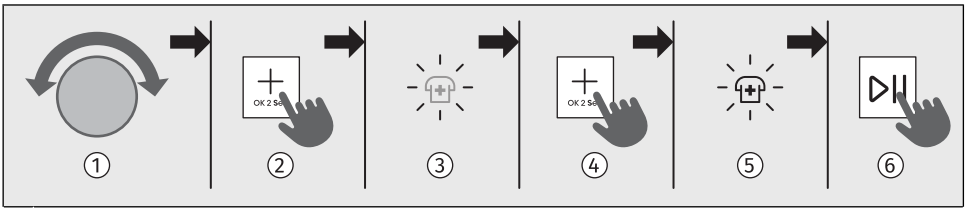

1 Use the selector knob to select the desired programme.

2 Press the + button repeatedly until the symbol of the desired function lights up and starts flashing. (Briefly pressing the + button allows you to scroll through the available functions.)

3 The symbol of the desired function flashes.

4 By pressing and holding the + button for 2 seconds, you select the function and move to the next one.

5 The symbol of the selected function is fully illuminated.

6 The function is activated by pressing the + button for 2 seconds.

Additional function options vary depending on the programme.

	Dry target **Function for selecting the drying level.**
Selection:	You can choose between different levels of dryness of the laundry and drying time. You can select it before starting the drying process. Press the button ☼. Three options are available: ▱, ▯ and ☼, which allow selecting a higher laundry dryness level and extend the drying time. The activated dryness level is highlighted. If the *Disinfect* function is selected, only the highest drying level *Extra dry* is available.
Activation:	To start drying, press *Start*/*Pause*. At the end of the program, the function is not saved, unless the same program with the same settings has been used three times in a row (then the **AdaptTech** function is activated).

	Nature Dry **Gentle drying of laundry at a lower temperature.**
Selection:	By pressing, it is possible to select drying at a lower, laundry-friendly temperature. When this function is selected, the indicator *Nature Dry* lights up. This function is intended for delicate garments that can be dried in the dryer. If the function *Nature Dry* is selected, the function *Disinfect* is not available.
Activation:	To start drying, press *Start*/*Pause*.

	Half load **Function for shorter drying time for a smaller load of laundry.**
Selection:	By pressing , you can select between normal and half load, which affects the displayed drying time. When you select a drying program, the function is only available if is highlighted. If you activate the function, the drying time shown on the display is shortened.
Activation:	To start drying, press *Start*/*Pause*.

	Delay end **Function for delaying the end of drying cycle**
Selection:	Select the desired programme and extra functions. Close the dryer door. By pressing , it is possible to set the end of drying up to 24 hours. If you press any key (except and *Start*/*Pause*) while setting the function, then the function will be reset. Therefore, before setting this function all other desired functions have to be set first. Press or hold to set the desired drying end delay period. It can be selected in 30-minute increments up to 6 hours, and then in 1 hour increments up to 24 hours. The indicator lights up on the display. The end of drying time is displayed. The countdown begins. When the countdown reaches the drying program time (e.g. 2:30), the drying program starts automatically. **Example of function setting:** **If you wish the drying programme end at 6:00 in the morning and it is now 21:00, then set the delaying the end of the drying program to 9 hours.**
Interruption:	To stop or change the drying end delay, rotate the drying programme selector knob to position for at least 1 second. You can set a new end of drying delay time the next time you switch on the dryer.
Activation:	Press *Start*/*Pause* to activate the function. The dryer starts counting down the time. When the countdown reaches the drying programme duration (e.g. 2:30), the drying programme starts automatically. If the function is active, it can be interrupted by holding down the 3 button for seconds. The drying cycle starts immediately after the interruption of the function.

	Time (timed drying) **To set the drying time on the program**
Selection:	By pressing it is possible to set the drying time. The set drying time is shown on the display. The start time is 0:30, at each press the time increases by 15 min. The maximum drying time is 4:00 h. To reset (cancel) the set time, hold position for 3 seconds.
Activation:	To start drying, press *Start*/*Pause*.

	Disinfect **For reducing microbes and allergens on clothes**
Selection:	Using the function allows you to reduce microbes and allergens on laundry, as it uses a higher drying temperature. The function must be selected before starting the drying process. Press button + to first select and confirm the function. Symbol lights up. If the function *Disinfect* is selected, the function *Nature Dry* is not available.
Activation:	To start drying, press *Start*/*Pause*.

	Anti crease **A function to loosen and reduce creasing of laundry.**
Selection:	This function prevents laundry from creasing after drying. It is enabled by default for all programmes and operates for 3 hours. It does not affect the total drying time. Press button + to first select and confirm the function. Symbol lights up. By pressing + again, you can deactivate the function. When you open the dryer door after the drying cycle is finished, the function is automatically cancelled. The function is also cancelled if you press the button *Start*/*Pause* after the program has finished.
Activation:	To start drying, press *Start*/*Pause*.

	Optimizing drying time **Using advanced technology, the dryer detects the load size and moisture level and continuously adjusts the drying time during the programme.** The time shown on the display at the start of the programme is for information only and may change during drying. The laundry will be properly dried at the end of the programme even if the load is smaller than the recommended amount.
Selection:	Automatic
Activation:	Automatic

6.6 Start the drying programme

Starting the programme

Close the dryer door and start the drying programme by pressing the *Start*/*Pause* button on the right side of the display.

If the TIME REMAINING indicator flashes three times and an audible signal sounds, this means that the dryer door is open or not properly closed. Close the dryer door and press the *Start*/*Pause*-button again to resume the drying programme.

Pausing, stopping and changing the program

Temporarily pause the drying programme by briefly pressing the *Start*/*Pause* button. The remaining drying time flashes on the display. Press the *Start*/*Pause* button again briefly to resume the programme.

Stop the drying programme by pressing and holding the *Start*/*Pause* button for 3 seconds, or turn the selector to position ⏻. The dryer will start cooling. Cooling time depends on the selected programme. To switch the appliance back on, turn the selector to the desired programme, set the functions, and start drying by pressing the *Start*/*Pause* button.

Opening the Door

The dryer door can be opened at any time, the drying cycle will be interrupted.

When the door is closed and the *Start*/*Pause* button is pressed, the drying will resume from the point at which it was interrupted.

HOT SURFACE!
The dryer door will heat up during the drying process. When opening the door during a drying programme, the laundry and the door surface may be very hot! Make sure you do not burn yourself when opening the dryer door.

Adding/removing laundry during the operating of the appliance

In order to add or remove laundry from the dryer during programme operation, proceed as follows:

1. Press the *Start*/*Pause* button or open the dryer door.
2. If you have not already done so, open the door. Add or remove laundry from the drum.
3. Close the dryer door!
4. Press the button *Start*/*Pause*.

The drying program will resume.

HOT SURFACE!
When loading the laundry, make sure you do not burn yourself when you open the dryer door.

INFORMATION!
Drying time will resume from the point at which the drying programme was interrupted.

INFORMATION!
If you increase the amount of laundry during drying, the laundry may be less efficient and unevenly dried. This may also cause friction and increased creasing.
Consequently, drying time may be longer.

Power supply failure

In case of an error or fault, the drying programme will be interrupted.

In the event of a power failure, the drying programme is interrupted. The display shows **PF**. After power is restored, press the *Start*/*Pause* button to continue drying.

The drying programme continues at the stage where it was interrupted.

Full condensate tank

When the condensate tank is full, the drying programme will pause (the sign **Full** will be lit).

Empty the condensate tank (see chapter *CLEANING AND MAINTENANCE* / *Emptying the condensate tank*).

Press the *Start*/*Pause* button to resume the drying programme from the point at which it was interrupted.

6.7 Complete the drying cycle

The dryer will indicate the end of the drying programme with an acoustic signal and **End** will appear on the display until the dryer switches into low standby mode or switches off. After 5 minutes, the **End** sign will no longer be displayed.

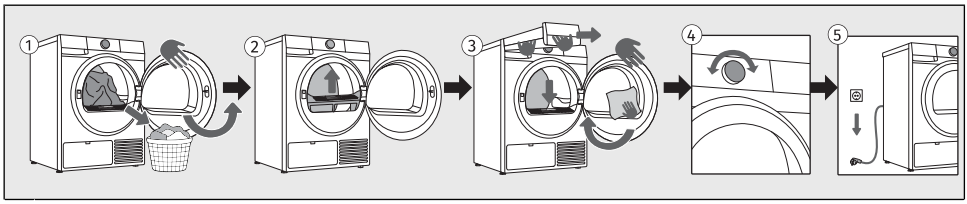

1 Open the dryer door. Take the laundry from the drum.

2 Pull out the filter from the front of the appliance housing, clean it, and reinsert it. See chapter *CLEANING AND MAINTENANCE* / *Cleaning the lint filter*.

3 Empty the condensate tank. See chapter *CLEANING AND MAINTENANCE* / *Emptying the condensate tank*.
Close the door.

4 Switch off the dryer (turn the selector to position ⏻).

5 Empty the condensate tank and unplug the power cord from the outlet.

INFORMATION!
After the end of the drying programme, immediately remove the laundry from the dryer to prevent it from creasing again.

WARNING!
The final drying cycle includes a cooling down stage without heater operation. It makes sure the laundry is of suitable temperature at the end of the program and that it can be taken from the dryer without risk of touch hot clothes.

7. APPLIANCE SETTINGS AND ADJUSTMENTS

This chapter describes:
- how to save personal settings,
- how to customise your appliance using additional settings,
- how to enter the User Settings Menu.

There are a few additional settings that can be set on the appliance. This will allow you to further customize the device to your personal use and needs.

The basic principle for selecting additional settings is similar to selecting functions. See chapter *DRYING PROCESS, STEP BY STEP (1–7) / Select the additional functions*.

7.1 Saving programe and selected functions

You can change the initial settings of each drying programme; some are saved automatically.

	Settings saved **Function to save your settings for selected programs and functions.**
Selection:	After selecting the drying program and additional functions, press the button + several times until the ↓ symbol lights up.
Activation:	Settings are saved by pressing the + button for 2 seconds. The programme is saved until you change it again using the same procedure or if you reset the personal settings to the factory settings (see the chapter below).

	**Adapt**Tech **Automatic function for storing frequently used programmes and settings.**
Activation:	When a drying programme setting is used three times in a row, this setting is stored as default and will always be suggested when you select that drying programme. If you manually save the settings on a drying program, on that program is cancelled. The programme is saved until you reset the personal settings to the factory settings (see the chapter below).

7.2 Additional appliance settings

	Child Lock (child safety) **A safety feature.**
Activation:	**As long as the child lock is activated, programme, settings, or additional functions cannot be changed.** By using this setting, you lock the display so that children cannot accidentally start or change the cycle. Press the + button repeatedly until the symbol starts flashing. Confirm the selection by pressing the + button for 2 seconds. The function can also be activated during the programme using the procedure described above. If the child lock is activated, programme or additional functions cannot be changed. It remains active even after the appliance is switched off, so you must switch it off before selecting a new programme.
Deactivation:	To switch off (deactivate) the child lock, press button 3 sec for + second. Animation 3-2-1 will start. At the end of the animation, the function turns off (is deactivated). It is possible to switch off *Child Lock* in the same way during the drying programme.

	Remote control **Function for remote control.**
Description:	To use this function, the appliance must be connected to the network, see chapter *BEFORE USING THE APPLIANCE FOR THE FIRST TIME / First connection to a Wi-Fi network*. Remote control is available for the next 24 hours, even when the appliance enters standby mode. Remote control can be cancelled by pressing the *Start/Pause* button. Continue operating the appliance in the **Connect**Life app, where you can choose from several options (selection, launch, and monitoring and stopping of the programme, amongst other additional settings, ...) Dryer operation can be paused or stopped from the app by selecting Start/Pause, *Add clothes* ... Some options can be implemented remotely in full, and some require your physical presence, such as adding laundry during the drying cycle (*Add clothes*).
Selection:	Turn the selector to *Remote control*.
Activation:	After you have loaded the laundry, close the dryer door. Continue activities in the app (select a program, additional functions and start drying).

7.3 User settings menu

To enter the User Settings menu, press + and ⟳ simultaneously and hold until the 3-2-1 animation completes (at least 3 seconds).

Press ☼ to move between the two user settings (*Sound* / *Factory reset*).

	Sound On/Off **Option to switch off or adjust the sound volume.**
Display:	The sound volume is preset to level 2. Press the ⏲ button to select the sound level or to switch the sound off. If the sound is switched off, there will be no audible signal at the end of the drying programme. Available settings: **1** = silent sound setting **2** = medium sound setting **3** = loud sound setting **0** = sound off Press the + button to save and exit.

	**Factory reset** **Delete all settings and return to the factory settings.**
Display:	The display shows **rES**. Briefly press ⏲ to restore all settings to factory defaults (your own settings and all stored programmes will be deleted). The **rES** symbol flashes twice, and the start screen appears automatically.
Exit:	If you do not want to restore to *Factory reset*, press + to exit.

8. CLEANING AND MAINTENANCE

In this chapter, you will learn everything about cleaning your appliance:
- how to clean the exterior of the dryer,
- how to clean the filter system,
- how to empty and clean the condensate container.

ELECTRIC SHOCK!
Before cleaning, make sure to switch off the dryer and disconnect it from the power mains (unplug the power cord from the outlet).

INFORMATION!
The dryer may never be operated without the filters in place or with damaged filters, as excessive amount of accumulated fibres from the fabric could cause malfunction or failure of the dryer.

8.1 Cleaning the dryer exterior

ELECTRIC SHOCK!
Danger of electric shock.
Even when the dryer is switched off, it remains under voltage for some time. Always unplug the power cord before cleaning or performing maintenance.

WARNING!
Do not use any solvents or cleaning agents that could damage the dryer (please observe the recommendations and warnings provided by the manufacturers of the cleaning agents).

WARNING!
Damage that can be caused by water.
Do not clean the dryer with a jet of water, as water could enter the dryer and damage its components.

Wipe all parts of the dryer with a soft cloth until dry.

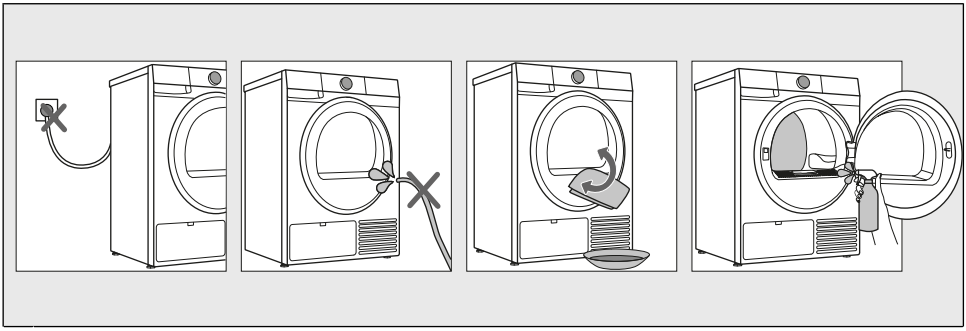

1 Before cleaning, unplug the dryer from the power mains.

2 Do not clean the dryer with a jet of water!

3 Clean the dryer exterior and display unit using a soft damp cotton cloth and water. Wipe all parts of the dryer with a soft cloth until dry.

4 Clean the drum using a soft cotton cloth and a suitable cleaning agent.

8.2 Cleaning the lint filter

INFORMATION!
Clean the lint filter after each drying cycle.

The dryer is fitted with a **filtering system** consisting of two filters (a and b), which prevent any impurities from entering the heat exchanger system.

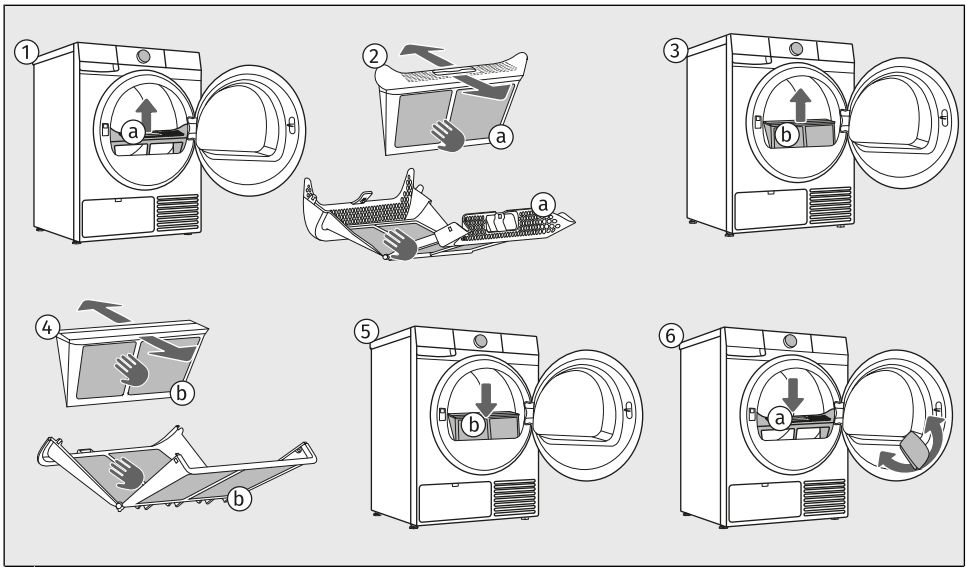

1 Pull out the lint filter (a).

2 Pull apart the lint filter with both hands (a).
Carefully remove fibers and threads from the lint filter (a) using your hand or a vacuum cleaner.
Clean the lint filter (a) after each drying cycle.

3 From the same opening of the dryer, pull out the lint filter (b). If necessary, wipe the area where it is located.

4 Pull apart the lint filter with both hands (b).
Carefully remove the layer of fibers and threads from the lint filter (b) using your hand, a cloth or a vacuum cleaner.
Clean the lint filter (b) after each drying cycle.

5 Insert back the lint filter (b) into the opening.
Make sure there are no lint residues in the opening. If necessary, vacuum them up with a vacuum cleaner.

6 Insert back the lint filter (a) that you pulled out first.
If necessary, clean the filter housing and door gasket as well.

INFORMATION!
Do not rinse the filter under water to avoid micro-plastic effluent into the groundwater!

INFORMATION!
Make sure the lint filter is correctly inserted.

INFORMATION!
Make sure you do not pinch your fingers with the filter cover.

WARNING!
Never operate the dryer without a lint filter or if the lint filter is damaged.

WARNING!
Insufficient cleaning of the filters in the dryer can lead to reduced drying efficiency, increased energy consumption, overheating of the appliance, and a higher risk of fire and mechanical damage. Regular cleaning of the filters will ensure optimal appliance performance, shorter drying times, and minimal energy consumption.

WARNING!
Do not shake the filter or hit it to remove dust and lint, because you can damage it!

8.3 Cleaning of the heat exchanger

INFORMATION!
We recommend you clean the heat exchanger at least every 3 months or more frequently in case of intensive use.

WARNING!
Do not touch the inner metal parts of the heat exchanger with bare hands. Danger of injury on sharp parts. Use appropriate protection gloves when cleaning the heat exchanger.

WARNING!
Incorrect cleaning of the metal fins of the heat exchanger can permanently damage the tumble dryer. Do not press on the metal fins with hard objects like for example the plastic tube of a vacuum cleaner.

During cleaning, some water may be spilled. It is therefore recommended to place an absorbent cloth on the floor.

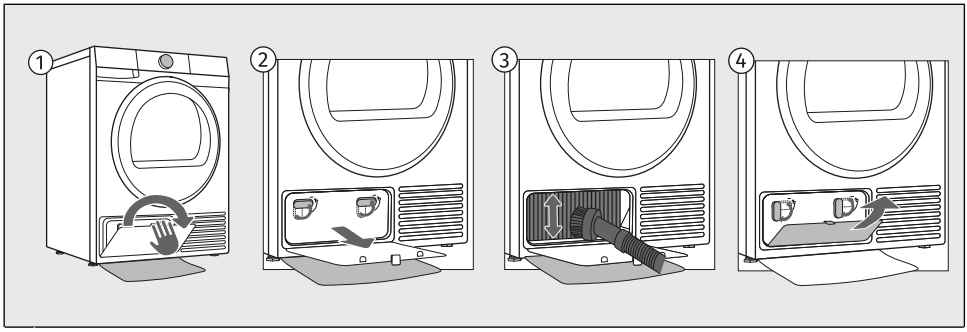

1 Open the heat exchanger's outer cover.

2 Hold the levers on the inside cover and rotate them upwards. Remove the inside cover.

3 The dust and dirt in the metal fins of the heat exchanger can be cleaned with a vacuum cleaner and a soft brush attachment.
Without pressing, gently move the brush attachment only in the direction of the metal fins from top to bottom. Too much pressure can damage or bend the metal fins of the heat exchanger.

4 Reinstall the inside cover and rotate the levers clockwise to the vertical position.
Close the outer cover.

8.4 Emptying the condensate tank

INFORMATION!
Empty the condensate tank after each drying cycle.

If the condensate tank is full, the drying programme will be paused automatically.

Symbol will light up on the display unit, indicating that the condensate tank should be emptied.

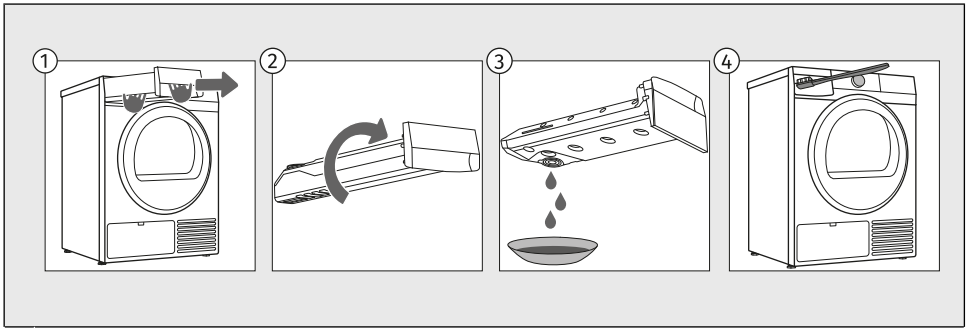

1 Pull out the condensate tank from the dryer (using both hands as shown in the figure).

2 Turn it upside down over a washbasin or sink.

3 Pour the water out of the condensate tank.

4 Also clean the dryer opening and reinsert the condensate tank.

INFORMATION!
Water from the condensate tank is not drinkable. If thoroughly filtered, it can be used for ironing.

WARNING!
Never add chemicals or fragrances into the condensate tank.

It is not necessary to empty the condensate tank if the drain hose is connected directly to a drain (see chapter *INSTALLATION AND CONNECTION* / *Draining the condensate*).

9. TROUBLESHOOTING AND SERVICING

In this chapter, you will learn:
- how to access information about the number of completed cycles,
- how to act in case of malfunctions or problems during drying,
- descriptions of warnings, alerts, and error messages displayed on the screen,
- when and how to contact the service centre,
- what to do in case of a warranty claim and what the warranty covers,
- where to order spare parts.

9.1 What to do in case of problems?

Disturbances from the environment (e.g. the power grid) may result in various error reports (see the tables below). In such case:

- Switch off the dryer and wait at least one minute.
- Switch on the dryer and repeat the drying programme.
- Most errors during operation can be resolved by the user (see the comming tables).
- If the error occurs again, call an authorized service unit.
- Repairs may only be carried out by an adequately trained person.
- Repair or any warranty claim resulting from incorrect connection or use of the dryer shall not be covered by the warranty. In such cases, the costs of repair shall be charged to the user.

GENERAL MALFUNCTIONS

The machine will not start.	**The main switch is not switched on.** Check whether the main switch is on. **There is no voltage in the power outlet.** Check the fuse. Check if the power cord plug is correctly inserted into the power outlet.
There is voltage in the outlet, but the drum does not spin and the appliance does not work.	**Open door.** Check if the door is closed properly. **The condensate tank is full.** Empty the condensate tank (see chapter *CLEANING AND MAINTENANCE/Emptying the condensate tank*). **Perhaps the *Delay end* function was set.** To cancel the start delay, press the position *Delay end* and hold for 3 seconds. **Programme was not started in accordance with the instructions.** Re-read the instructions for use again.
The appliance stops heating completely during a programme.	**The net filter may be clogged. As a result, the temperature in the dryer rises, which in turn causes overheating, and therefore heating is switched off.** Clean the lint filter (see chapter *CLEANING AND MAINTENANCE/Cleaning the lint filter*). Wait for the appliance to cool down, and try running it again..

A slight hitting noise appears.	**If the dryer is out of use for a long period of time, the support elements are under stress at the same point.** The noise will subside without any intervention.
The door opens during drying.	**Excessive load on the door (too much laundry in the drum).** Reduce the amount of laundry.
Unevenly dried laundry.	**Laundry of varying types and thickness, or excessive amount of laundry.** Make sure you have sorted the laundry by type and thickness, whether you have added a suitable amount of laundry to the drum, and whether you have selected a suitable programme (see chapter *DRYING PROCESS, STEP BY STEP (1–7) / Choose the drying program*).
Laundry not dried or drying takes too long	**Filters are not clean.** Clean the filters (see chapter *CLEANING AND MAINTENANCE/Cleaning the lint filter*). **Dryer is placed in a closed room; room that is too cold; or room that is too small and the air overheats as a result.** Make sure there is adequate supply of fresh air to the dryer; for example, open the door and/or window. Check if the temperature in the room where the dryer is installed is too high or too low. **Laundry was not sufficiently wrung or spun.** If the load is still wet after completed drying cycle, an appropriate drying programme should be run again (after cleaning filters). **Amount of laundry dried in the appliance is too large or insufficient.** Use a suitable programme or extra functions. **Laundry (such as bedding) gets tangled into large balls.** Close the buttons or zippers on the laundry before drying. Select a suitable programme (e.g. the program *Bedding*). After the drying process, loosen the laundry and select an additional drying programme (e.g. *Time*).
Sounds	**Humming sound:** compressor noise; the noise level depends on the program and the drying stage. **Buzzing sound:** the compressor is occasionally ventilated. **Pumping or liquid flowing sound:** the pump is pumping the condensate into the condensate tank. **Clicking sound:** start of automatic cleaning of the heat exchanger (compressor). **Rumbling or rattling noise:** during drying when the laundry also includes hard parts (such as buttons, zippers etc.)

INFORMATION!
In the initial drying stage or during drying, the compressor and the heat pump cause noise; this, however, does not affect the tumble dryer operation.

INFORMATION!
Noise and vibration – check if the feet are properly leveled.

9.2 Display Message Table

Warnings/information for the user, which can be indicated on the display unit, may include the following:

INFORMATION

	**Overview of the number of drying cycles performed** The number of drying cycles performed will appear on the display for 3 seconds if you unplug the power cord, wait 10 seconds and then plug the power cord back in. After 3 seconds, the appliance enters standby mode.

WARNINGS

Full	**Full condensation water tank warning** Empty the condensate tank before resuming the programme (see chapter *CLEANING AND MAINTENANCE* / *Emptying the condensate tank*).
PF	**Power supply failure warning** Drying interrupted due to power supply failure. Press the *Start*/*Pause* button to restart or resume the drying programme.
End/**AC**	**Drying cycle completed warning** After the drying programme is complete, the signs **End** and **AC** will alternate on the display unit. Two red symbols and will light up. Clean the filters and empty the condensate tank.

The following lists all the errors that the user can see on the user interface.

HEATING SYSTEM FAULT

E91 **E92** **E93**	**Temperature sensor failure**

ELECTRONICS MALFUNCTION

E00	**Control unit failure**
E02	**Communication error**
E03	**Pump error** Failure on the pump for pumping the condensate into the condensate tank
E07 **E08**	**Control unit failure** Disconnect the tumble dryer from the power supply.

CONNECTIVITY MALFUNCTIONS

	**The appliance cannot be controlled remotely** Appliance remote control is not activated or enabled. Check if the Wi-Fi symbol on the appliance is lit, and turn the selector to position Remote control .
	**The appliance will not connect to the Wi-Fi network** The appliance cannot find your Wi-Fi network. Check whether 2.4 GHz network is activated on your router and whether the Wi-Fi signal at the appliance is strong enough.
E17	**The appliance will not connect to the Wi-Fi network** The error only affects the remote control functionality. It does not affect the drying process on other programmes.

Write down the error code (e.g. E0, E1), switch off the dryer, and call the nearest authorized service (call centre).

9.3 Service

When you contact a service centre, please state your dryer's type, code/ID, model number, and serial number.

Dryer type, code, model, and serial number can be found on the rating (type) plate on the inner side of the dryer door. See chapter *DESCRIPTION OF THE DRYER/Technical data on the rating plate*.

WARNING!
In case of a failure, only use approved spare parts by authorized manufacturers.

WARNING!
Repair or any warranty claim resulting from incorrect connection or use of the dryer shall not be covered by the warranty. In such cases, the costs of repair shall be charged to the user.

9.4 Appliance repair

If you have encountered a problem that you cannot resolve, please contact your nearest service centre for professional help – details available at https://international.gorenje.com/. Our website also has information about the availability of spare parts and what you can repair yourself.

You will need to provide the details stated on the serial number plate. Include the article number and the serial number.

Please note that non-professional repairs may pose a safety risk to the user and affect the warranty.

In European Union Member States and European Economic Area States, consumers have the right to choose, at their own discretion, between an authorized repairer and an independent repairer. However, where the consumer chooses an independent repairer, the seller and/or the manufacturer shall not be liable for any product safety risks or infringements of intellectual property rights resulting from interventions carried out by the independent repairer, nor shall they be responsible for any loss of guarantee or warranty rights arising from objective or legitimate reasons attributable to improperly performed repairs.

Right to Repair

For sales contracts concluded with consumers within European Union Member States and European Economic Area States, on or after 31 July 2026, according to the Right to Repair Directive ((EU) 2024/1799), the following consumers' rights apply.

- Right to choose repair
- Extension of the legal guarantee

This information reflects the minimum level of consumer protection established by the Right to Repair Directive. EU Member States may introduce more extensive consumer rights at the national level. Where national legislation provides a higher level of protection, such national provisions shall prevail.

Additional information provided by the manufacturer is available at: https://international.gorenje.com/.

9.5 Warranty

INFORMATION!
The warranty does not cover consumables, minor deviations in colour, increased noise that results from appliance age and which does not affect the functionality of the dryer, and aesthetic defects on components, which do not affect the dryer's functionality and safety. The warranty does not cover the errors or failures resulting from disturbances from the environment (lightning strike, power grid failures, natural disasters etc.).

INFORMATION!
Report any malfunction to your local call centre or web address; all information can be found in the enclosed warranty statement. Contact details of your authorised service centre are available in the warranty statement supplied with the appliance and on the website by scanning the QR code on the rating plate.

INFORMATION!
Some simple faults described in the chapter *TROUBLESHOOTING AND SERVICING* can be fixed by the user himself by taking into account the instructions without risk to their own safety and without affecting the warranty conditions.

9.6 Spare parts

INFORMATION!
Functional spare parts for the dryer you purchased will be available for 10 years. During this time, original spare parts will be available to ensure the correct operation of your appliance. A list of spare parts and repair tips in accordance with the current Ecodesign Directive can be found by scanning the QR code located on the inside of the door of the dryer. Or on the following link: https://auid.connectlife.io.

INFORMATION!
The belt may only be replaced by a service technician authorized by the manufacturer, who can supply the original spare part with the code 907722 BELT POLY-V 7PH 1971 HUTCHINSON; 883648 BELT POLY-V 7PH 1879 HUTCHINSON (depending on the model).

10. TIPS FOR DRYING AND ECONOMIC USE YOUR DRYER

In this chapter, you will learn about:
– achieving optimally dried laundry and correct loading of the dryer,
– preventing unpleasant odours and extending the lifespan of your dryer,
– using drying programmes effectively,
– reducing energy consumption.

INFORMATION!
The most economical way of drying is to dry the recommended amount of laundry in each batch (see chapter *DRYING PROCESS, STEP BY STEP (1–7)* / *Choose the drying program*).

10.1 Tips for optimally dried laundry

INFORMATION!
Before drying, the laundry must be properly spun. A higher spin speed in the washing machine results in shorter drying times and lower energy consumption.
Do not dry unspun laundry!

Very damp or unevenly distributed laundry will prolong the drying process. Before loading the dryer, shake out the items to allow better air circulation in the drum.

Fabric softener is not necessary during washing, as laundry becomes soft and supple after tumble drying.

Sort the laundry according to fabric type and desired dryness level. Thicker items (e.g. towels) take longer to dry than thinner ones (e.g. T-shirts). For best results, avoid mixing items with very different properties.

Drying laundry made of particularly delicate fabrics that may be deformed is not recommended.

Laundry suitable for tumble drying is marked with the symbol ⊡. If the symbol is not shown, the fabric may not be heat-resistant. When the ⊠ symbol is indicated on the label, tumble drying is not permitted.

For delicate fabrics (e.g. wool, sensitive synthetics), select suitable programmes with lower temperatures or dry the items in the air.

To reduce creasing, avoid overdrying. For garments that will be ironed, select a lower dryness level.

INFORMATION!
Loading the dryer according to the capacity specified for each programme ensures better energy efficiency. Overloading may lead to uneven drying and longer programme duration.

When drying a small load or individual items, the sensor may not detect the actual moisture level in the laundry. In this case, we recommend using the (*Time*) programme to achieve sufficient dryness.

10.2 Preventing unpleasant odours and maintaining performance

INFORMATION!
After each drying cycle, remove lint from the filter. A clogged filter significantly increases energy consumption and prolongs drying time.

If the dryer is not connected directly to a drain, empty the condensate tank after each drying cycle.

Clean the heat exchanger regularly (see chapter *CLEANING AND MAINTENANCE* / *Cleaning of the heat exchanger*). Dust and lint reduce airflow and operating efficiency.

INFORMATION!
For quick refreshing of dry laundry, you can use the *Air refresh* programme without heating to remove unpleasant odours from lightly worn clothes.

10.3 Recommendations for energy-efficient drying

Remove as much moisture as possible in the washing machine. Drying laundry that has been spun at high speeds is significantly more energy-efficient.

Use automatic drying programmes whenever possible, as they adjust the duration to the load and detected moisture level, helping reduce energy consumption.

INFORMATION!
Regular maintenance (cleaning filters, emptying the condensate container) is essential to prevent extended drying times.

Avoid drying quick-drying fabrics (such as synthetics) together with heavy cotton items.

11. CONSUMPTION VALUES

INFORMATION!
The table lists the values for drying time and power consumption for drying of a test batch of laundry with various spinning rpm in the washing machine.

Explanation of symbols used below:	
Rated capacity (kg)	Programme duration (h:min)
Final moisture content (%)	Energy consumption (kWh per cycle)

Program				
Eco*	8	0 ± 3	2:46	1:69
	4		1:39	0:97
Cotton *Extra dry*	8	-3	3:12	1:77
	5,6		2:10	1:24
	4		1:43	0:92
Cotton *Storage*	8	-1	2:39	1:49
	5,6		1:57	1:06
	4		1:33	0:86
Cotton *Iron*	8	12 ± 4	1:47	1:01
	4		1:02	0:56
Easy care	4	2 ± 3	1:01	0:53
Sensitive	1	0	0:45	0:38
Mix *Extra dry*	4	-2	1:57	1:10
Mix *Storage*		0	1:35	0:88
Mix *Iron*		2	1:22	0:76

*Acoustic airborne noise emission, during the drying cycle amount to **63** dB.
*The *Eco* programme is suitable for drying wet cotton laundry and is used to assess compliance with EU legislation on eco-design 2023/2533.
The *Eco* programme is the most efficient programme in terms of energy consumption for drying wet cotton laundry.
All values in the table are provided per drying cycle.
The values provided for all programmes, except for the *Eco* programme, are for information only.

INFORMATION!
You can save energy by filling up the household tumble dryer to the maximum capacity specified for each programme.

INFORMATION!
Due to deviations in terms of type and amount of laundry, power supply oscillation, and environment temperature and humidity, the values measured at the end user may differ from the one stated in the table.

gorenje

GORENJE gospodinjski aparati, d.o.o. Address: Partizanska 12, 3320 Velenje, Slovenia
Phone: +386 (0)3 899 10 00 Fax: +386 (0)3 899 28 00 www.gorenje.com

SP26/4480D GOR en963768

963768-a7

We reserve the right to any changes and errors in the instructions for use.