Electrolux

electrolux.com/register



EN User Manual | **Oven**

COX8P08WH
EOX8P08WH
Y8POX28Z

INSTALLATION

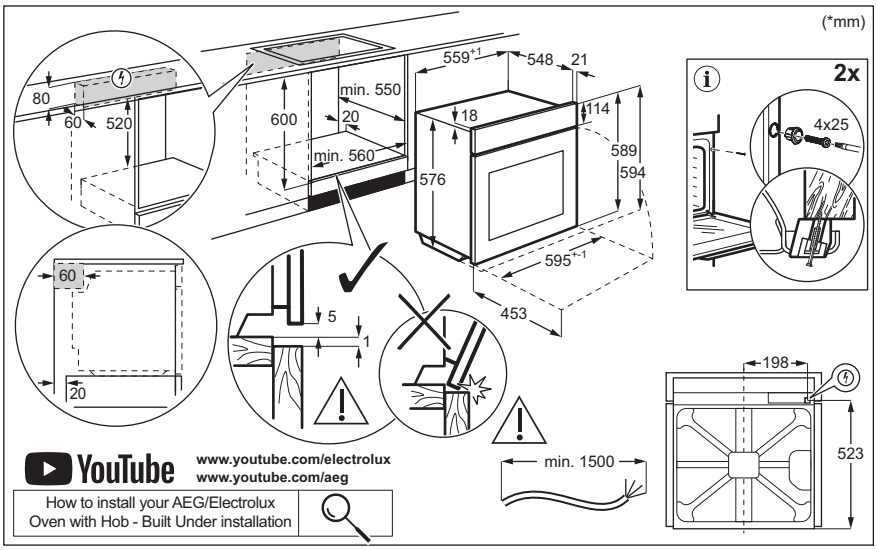

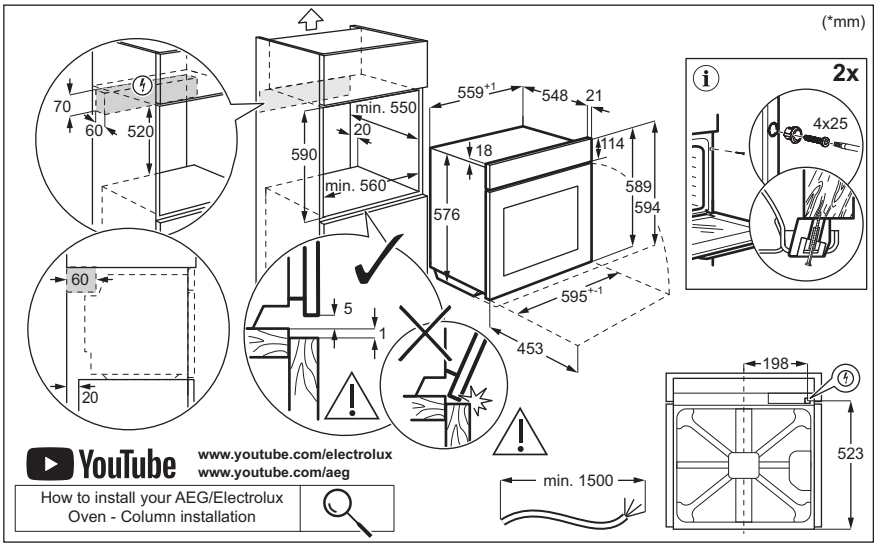

Welcome to Electrolux! Thank you for choosing our appliance.

Get usage advice, brochures, troubleshooting, service and repair information:
www.electrolux.com/support

Subject to change without notice.

CONTENTS

1. SAFETY INFORMATION....3
2. SAFETY INSTRUCTIONS....5
3. PRODUCT DESCRIPTION....8
4. CONTROL PANEL....8
5. BEFORE FIRST USE....9
6. DAILY USE....10
7. ADDITIONAL FUNCTIONS....12
8. CLOCK FUNCTIONS....13
9. USING THE ACCESSORIES....14
10. HINTS AND TIPS....15
11. CARE AND CLEANING....17
12. TROUBLESHOOTING....19
13. ENERGY EFFICIENCY....20
14. ENVIRONMENTAL CONCERNS....22

1. ⚠ SAFETY INFORMATION

Before the installation and use of the appliance, carefully read the supplied instructions. The manufacturer is not responsible for any injuries or damage that are the result of incorrect installation or usage. Always keep the instructions in a safe and accessible location for future reference.

1.1 Children and vulnerable people safety

- This appliance can be used by children aged from 8 years and above and persons with reduced physical, sensory or mental capabilities or lack of experience and knowledge if they have been given supervision or instruction concerning the use of the appliance in a safe way and understand the hazards involved. Children of less than 8 years of age and persons with very extensive and complex disabilities shall be kept away from the appliance unless continuously supervised.

- Children should be supervised to ensure that they do not play with the appliance and mobile devices with the app.
- Keep all packaging away from children and dispose of it appropriately.
- WARNING: The appliance and its accessible parts become hot during use. Keep children and pets away from the appliance when in use and when cooling down.
- If the appliance has a child safety device, it should be activated.
- Children shall not carry out cleaning and user maintenance of the appliance without supervision.

1.2 General Safety

- This appliance is for cooking purposes only.
- This appliance is designed for single household domestic use in an indoor environment.
- This appliance may be used in offices, hotel guest rooms, bed & breakfast guest rooms, farm guest houses, and other similar accommodation where such use does not exceed average domestic usage levels.
- Only a qualified person must install this appliance and replace the cable.
- Do not use the appliance before installing it in the built-in structure.
- Disconnect the appliance from the power supply before carrying out any maintenance.
- If the supply cord is damaged, it must be replaced by the manufacturer, its Authorised Service Centre or similarly qualified persons to avoid an electrical hazard.
- WARNING: Ensure that the appliance is switched off before replacing the lamp to avoid the possibility of electric shock.
- WARNING: The appliance and its accessible parts become hot during use. Care should be taken to avoid touching heating elements or the surface of the appliance cavity.
- Always use oven gloves to remove or insert accessories or ovenware.

- To remove the shelf supports first pull the front of the shelf support and then the rear end away from the side walls. Install the shelf supports in the opposite sequence.
- Do not use a steam cleaner to clean the appliance.
- Do not use harsh abrasive cleaners or sharp metal scrapers to clean the glass door since they can scratch the surface, which may result in shattering of the glass.
- Before pyrolytic cleaning, remove all accessories and excessive deposits/spills from the appliance cavity.

2. SAFETY INSTRUCTIONS

2.1 Installation

> ⚠ **WARNING!**
>
> Only a qualified person must install this appliance.

- Remove all the packaging.
- Do not install or use a damaged appliance.
- Follow the installation instructions available on our website.
- Always take care when moving the appliance as it is heavy. Always use safety gloves and enclosed footwear.
- Do not pull the appliance by the handle.
- Install the appliance in a safe and suitable place that meets installation requirements.
- Keep the minimum distance from other appliances and units.
- Before mounting the appliance, ensure it is level and that the door opens without any restraint.
- The appliance is equipped with an electric cooling system. It must be operated with the electric power supply.

2.2 Electrical connection

> ⚠ **WARNING!**
>
> Risk of fire and electric shock.

- All electrical connections should be made by a qualified electrician.
- The appliance must be earthed.
- Make sure that the parameters on the rating plate are compatible with the electrical ratings of the mains power supply.
- Always use a correctly installed shockproof socket.
- Do not use multi-plug adapters and extension cables.
- Make sure not to cause damage to the mains plug and to the mains cable. If the mains cable needs to be replaced, this must be carried out by our Authorised Service Centre.
- Do not let mains cables touch or come near the appliance door or the niche below, especially when it operates or the door is hot.
- The shock protection of live and insulated parts must be fastened in such a way that it cannot be removed without tools.
- Connect the mains plug to the mains socket only at the end of the installation. Make sure that there is access to the mains plug after the installation.
- If the mains socket is loose, do not connect the mains plug.
- Do not disconnect the appliance by pulling on the mains cable. Always pull on the mains plug.
- Use only correct isolation devices: line protecting cut-outs, fuses (screw type fuses removed from the holder), earth leakage trips and contactors.
- The electrical installation must have an isolation device which lets you disconnect the appliance from the mains at all poles. The isolation device must have a contact opening width of minimum 3 mm.

- Fully close the appliance door before you connect the mains plug to the mains socket.
- This appliance is supplied with a main plug and a main cable.

Cable types applicable for installation or replacement for Europe:
H07 RN-F, H05 RN-F, H05 RRF, H05 VV-F, H05 V2V2-F (T90), H05 BB-F, H05Z1Z1-F

For the section of the cable refer to the total power on the rating plate. You can also refer to the table:

Total power (W)	Section of the cable (mm^2)
maximum 1380	3x0.75
maximum 2300	3x1
maximum 3680	3x1.5

The earth cord (green / yellow cable) must be 2 cm longer than the brown phase and blue neutral cables.

2.3 Use

⚠ WARNING!

Risk of injury, burns and electric shock or explosion.

- Do not change the specification of the appliance.
- Make sure that the ventilation openings are not blocked.
- Do not let the appliance stay unattended during operation.
- Deactivate the appliance after each use.
- Be careful when you open the appliance door while the appliance is in operation. Hot air can be released.
- Do not operate the appliance with wet hands or when it comes in contact with water.
- Do not apply pressure on the open door.
- Do not use the appliance as a work surface or as a storage surface.
- Open the appliance door carefully. The use of ingredients with alcohol can cause a mixture of alcohol and air.
- Do not let sparks or open flames to come in contact with the appliance when you open the door.
- Always use glass and jars approved for preserving purposes.
- Do not put flammable products or items moistened with flammable products in, near or on the appliance.
- Do not share your Wi-Fi password.

⚠ WARNING!

Risk of damage to the appliance.

- To prevent damage or discolouration to the enamel:
  - do not put ovenware or other objects directly on the bottom of the appliance's cavity.
  - do not put aluminium foil directly on the bottom of cavity of the appliance.
  - do not put water directly into the hot appliance.
  - do not keep moist dishes and food in the appliance after you finish the cooking.
  - be careful when you remove or install the accessories.
- Discolouration of the enamel or stainless steel has no effect on the performance of the appliance.
- Use a deep pan for moist cakes. Fruit juices cause stains that can be permanent.
- Use only accessories supplied with this appliance or recommended by the manufacturer.
- Always cook with the appliance door closed.
- If the appliance is installed behind a furniture panel (e.g. a door) make sure the door is never closed when the appliance operates. Heat and moisture can build up behind a closed furniture panel and cause subsequent damage to the appliance, the housing unit or the floor. Do not close the furniture panel until the appliance has cooled down completely after use.

2.4 Care and cleaning

⚠ WARNING!

Risk of injury, fire, or damage to the appliance.

- Before maintenance, deactivate the appliance and disconnect the mains plug from the mains socket.
- Make sure the appliance is cold. There is the risk that the glass panels can break.
- Replace immediately the door glass panels when they are damaged. Contact the Authorised Service Centre.
- Be careful when you remove the door from the appliance, the door is heavy.
- Clean regularly the appliance to prevent the deterioration of the surface material.
- Clean the appliance with a moist soft cloth. Use only neutral detergents. Do not use abrasive products, abrasive cleaning pads, solvents or metal objects.
- If you use an oven spray, follow the safety instructions on its packaging.

2.5 Pyrolytic cleaning

⚠ WARNING!

Risk of Injury / Fires / Chemical Emissions (Fumes) in Pyrolytic Mode.

- Before carrying out the pyrolytic cleaning and initial preheating remove from the oven cavity:
  - any excess food residues, oil or grease spills / deposits.
  - any removable objects (including shelves, side rails, etc., provided with the appliance) especially any non-stick pots, pans, trays, utensils, etc.
- Read carefully all the instructions for pyrolytic cleaning.
- Keep children away from the appliance while the pyrolytic cleaning operates. The appliance becomes very hot and hot air is released from the front cooling vents.
- Pyrolytic cleaning is a high temperature operation that can release fumes from cooking residues and construction materials, as such consumers are advised to:
  - provide good ventilation during and after the pyrolytic cleaning.
  - provide good ventilation during and after the initial preheating.
- Do not spill or apply water on the oven door during and after the pyrolytic cleaning to avoid damaging the glass panels.
- Fumes released from all pyrolytic ovens / cooking residues as described are not harmful to humans, including children, or persons with medical conditions.
- Keep pets away from the appliance during and after the pyrolytic cleaning and initial preheating. Small pets (especially birds and reptiles) can be highly sensitive to temperature changes and emitted fumes.
- Non-stick surfaces on pots, pans, trays, utensils etc., can be damaged by the high temperature pyrolytic cleaning operation of all pyrolytic ovens and can be also a source for low level harmful fumes.

2.6 Internal lighting

⚠ WARNING!

Risk of electric shock.

- Concerning the lamp(s) inside this product and spare part lamps sold separately: These lamps are intended to withstand extreme physical conditions in household appliances, such as temperature, vibration, humidity, or are intended to signal information about the operational status of the appliance. They are not intended to be used in other applications and are not suitable for household room illumination.
- This product contains a light source of energy efficiency class G.
- Use only lamps with the same specifications.

2.7 Service

- To repair the appliance contact the Authorised Service Centre.
- Use original spare parts only.

2.8 Disposal

⚠ WARNING!

Risk of injury or suffocation.

- Contact your municipal authority for information on how to dispose of the appliance.
- Disconnect the appliance from the mains supply.
- Cut off the mains electrical cable close to the appliance and dispose of it.

3. PRODUCT DESCRIPTION

3.1 General overview

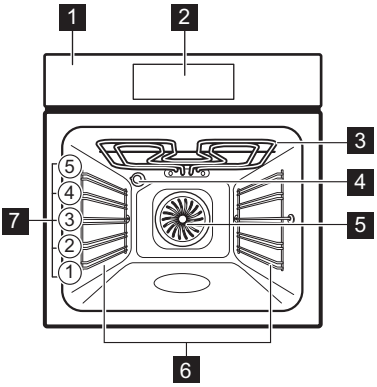

1 Control panel
2 Display
3 Heating element
4 Lamp
5 Fan
6 Shelf support, removable
7 Shelf positions

4. CONTROL PANEL

4.1 Control panel overview

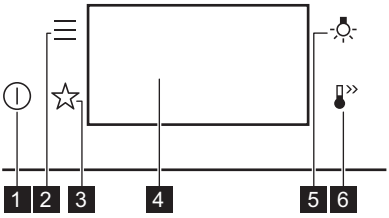

1	**ON / OFF** Press and hold to turn the appliance on and off.
2	**Menu** Lists the appliance options and setting functions.
3	**Favourites** Lists the favourite settings.
4	**Display** Shows the current settings of the appliance.
5	**Lamp switch** To turn the lamp on and off.
6	**Fast Heat Up** To turn on and off the function: Fast Heat Up.

4.2 Display

Display with key functions set.

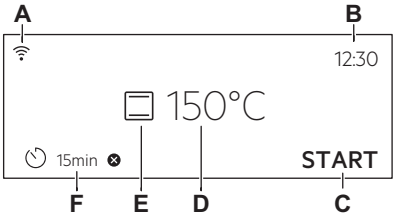

A. Wi-Fi

B. Time of Day
C. START / STOP
D. Temperature
E. Heating functions
F. Timer
G. Food Sensor (selected models only)

Display indicators	
OK	To confirm the selection / setting.
〈	To go one level back in the menu.
↩	To undo the last action.
	To turn the options on and off.
	The appliance is locked.
	The sound alarm function is activated.

Display indicators	
STOP	The sound alarm and stop cooking function is activated.
	Pop up message only is activated.
	Delayed start function is activated.
	To cancel the setting.
	Wi-Fi connection is turned on.
	Remote Operation is turned on.

ⓘ

The display shows various messages. When a message window appears, press the display to continue.

5. BEFORE FIRST USE

⚠ **WARNING!**

Refer to Safety chapters.

5.1 First connection

The display shows welcome message after the first connection.

You have to set: Language, Display Brightness, Key Tones, Buzzer Volume, Time of Day.

5.2 Wireless connection

To connect the appliance you need:
- Wireless network with the Internet connection.
- Mobile device connected to the same wireless network.

1. To download the app scan the QR code located on the back cover of the user manual. You can also download the app directly from the app store.
2. Follow the app onboarding instructions.
3. Turn on the appliance.
4. Press ☰. Select: Settings / Connections.
5. - slide or press to turn on or off: Wi-Fi.

The appliance wireless module starts within 90 sec.

ⓘ

For safety reasons, remote operation turns off automatically after 24 h. Repeat the onboarding, if needed.

Frequency	2.4 GHz WLAN
	2400 - 2483.5 MHz
Protocol	IEEE 802.11b DSSS, 802.11g/n OFDM
Max Power	EIRP < 20 dBm (100 mW)
Wi-Fi module	NIUS-50

5.3 Software licences

The software in this product contains components that are based on free and open source software. Electrolux acknowledges the contributions of the open software and robotics communities to the development project.

To access the source code of these free and open source software components whose license conditions require publishing, and to

see their full copyright information and applicable license terms, visit: http://electrolux.opensoftwarerepository.com (folder NIUS).

5.4 Initial preheating and cleaning

Preheat the empty appliance before the first use and contact with food. The appliance can emit unpleasant smell and smoke. Ventilate the room during preheating.

1. Remove all accessories and removable shelf supports from the appliance.
2. Set the function . Set the maximum temperature. Refer to Daily use. Let the appliance operate for 1 h.
3. Set the function . Set the maximum temperature. Let the appliance operate for 15 min.
4. Set the function . Set the maximum temperature. Let the appliance operate for 15 min.
5. Turn off the appliance and wait until it is cold.
6. Clean the appliance and the accessories only with a microfibre cloth, warm water and a mild detergent.
7. Put the accessories and removable shelf supports back to their initial position.

6. DAILY USE

⚠ WARNING!
Refer to Safety chapters.

6.1 Heating functions

STANDARD

	Grill To grill thin pieces of food and to toast bread.
	Turbo Grilling To roast large meat joints or poultry with bones on one shelf position. To bake gratins and to brown.
	True Fan Cooking To roast meat and bake cakes. Set a lower temperature than for Conventional Cooking as the fan distributes heat evenly in the oven interior.
	Frozen Foods Perfect for ready meals (e.g. french fries, croquettes or spring rolls).
	Conventional Cooking To bake and roast food on one shelf position.
	Hot Air and Bottom To bake pizza and other dishes that require more heat from below.
	Bottom Heat Choose this function after a cooking process to brown the food more on the bottom if needed. Use the lowest shelf level.
	Bread Baking To bake bread.
	Dough Proving To speed up the rising of the yeast dough. Cover the surface of the dough to prevent from drying.

SPECIALS

	Preserving To preserve vegetables and fruits, place canning jars in a baking tray filled with water, using heat-resistant jars with bayonet or screw caps of the same size. Use the lowest shelf position.
	Dehydrating To dry sliced fruit, vegetables and mushrooms. To allow the moisture-saturated air to escape and the fruit to dry better, it is advisable to open the oven door occasionally during the drying process.
	Plate Warming To preheat plates for serving.
	Defrost To defrost food (vegetables and fruit). The defrosting time depends on the amount and size of the frozen food.

	Au Gratin For dishes such as lasagna or potato gratin. To bake gratins and to brown.
	Slow Cooking Low temperature cooking process. It's perfect to cook delicate food (e.g., beef, veal or lamb). For a richer flavour and better browning, sear the meat before placing it in the oven.
	Keep Warm To keep food warm. Please note that some dishes may continue to cook and dry out while being kept warm. Cover the dishes if necessary.
	Moist Fan Baking This function is designed to save energy during cooking. When you use this function, the temperature inside the appliance may differ from the set temperature. The residual heat is used. The heating power may be reduced. For more information refer to Daily use, Notes on: Moist Fan Baking.
	PizzaExpert To quickly bake pizza on a heated pizza steel at high temperatures, ensuring a crispy base and a soft, airy crust. This function distributes heat evenly throughout the oven interior.

6.2 Notes on: Moist Fan Baking

This function was used to comply with the energy efficiency class and ecodesign requirements (according to EU 65/2014 and EU 66/2014). Tests according to: IEC/EN 60350-1.

The oven door should be closed during cooking so that the function is not interrupted and the oven operates with the highest energy efficiency possible.

When you use this function the lamp automatically turns off after 30 sec.

For the cooking instructions refer to Hints and tips, Moist Fan Baking. For general energy saving recommendations refer to Energy efficiency, Energy saving tips.

6.3 Setting: Heating functions

1. Turn on the appliance. The display shows the default heating function and the temperature.
2. Press the symbol of the heating function to enter the submenu.
3. Select the heating function and press OK.
4. Set the temperature. Press OK.
5. Press START.
6. STOP - press to turn off the heating function.
7. Turn off the appliance.

The lamp may turn off automatically at a temperature below 80°C during some heating functions.

6.4 Menu

Press ☰ to enter the menu.

Menu item		Description
Assisted Cooking		Lists automatic programmes.
Cleaning		Lists cleaning programmes.
Favourites		Lists the favourite settings.
Options		To set the appliance configuration.
Settings	Connections	To set the network configuration.
	Setup	To set the appliance configuration.
	Service	Shows the software version and configuration.

Submenu for: Cleaning

Submenu	Description
Pyrolytic cleaning, quick	Duration: 1 h.
Pyrolytic cleaning, normal	Duration: 1 h 30 min.
Pyrolytic cleaning, intense	Duration: 2 h 30 min.

Submenu for: Options

Submenu	Description
Light	Turns the lamp on and off.
Child Lock	Prevents accidental activation of the appliance.
Fast Heat Up	Shortens the heat up time. It is available only for some of the heating functions.
Cleaning Reminder	Turns the reminder on and off.
Digital Clock Style	Changes the format of the displayed time indication.

Submenu for: Settings

Connections

Submenu	Description
Wi-Fi	To enable and disable: Wi-Fi.
Remote Operation	To enable and disable remote operation. Option visible only after you turn on: Wi-Fi.
Auto Remote Operation	To start remote operation automatically after pressing START. Option visible only after you turn on: Wi-Fi.
Network	To check network status and the signal power of: Wi-Fi.
Forget Network	To disable current network from auto connection with the appliance.

Setup

Submenu	Description
Language	Sets the appliance language.
Display Brightness	Sets the display brightness.
Key Tones	Turns the tone of the touch fields on and off. It is not possible to mute the tone for ⏻.
Buzzer Volume	Sets the volume of key tones and signals.
Time of Day	Sets the current time and date.

Service

Submenu	Description
Demo Mode	Activation / deactivation code: 2468
Software Version	Information about software version.
Reset All Settings	Restores factory settings.

6.5 Setting: Assisted Cooking

Assisted Cooking submenu consists of a set of additional functions and programs that are designed for dedicated dishes. Each dish in this submenu is provided with a suitable setting. You can adjust the time and the temperature during cooking.

For some of the dishes you can also cook with Weight Automatic.

1. Turn on the appliance.
2. Press ☰.
3. Press ✕. Enter Assisted Cooking.
4. Choose a dish or a food type.
5. Place the food inside the appliance and press START.

When the function ends, check if the food is ready. Extend the cooking time, if needed.

7. ADDITIONAL FUNCTIONS

7.1 Favourites ☆

You can save up to 3 of your favourite settings, such as heating function and cooking time.

1. Turn on the appliance.
2. Select the preferred setting.
3. Press ☰.
4. Select: Favourites / Save current settings.
5. Press **+** to add the setting to the list of: Favourites.
6. Press OK.

- press to reset the setting.

- press to cancel the setting.

7.2 Function lock

This function prevents an accidental change of the appliance function.

1. Turn on the appliance.
2. Set a heating function.
3. , - press at the same time to turn on the function.

, - press at the same time to turn off the function.

7.3 Child Lock

This function prevents accidental activation of the appliance.

1. Turn on the appliance.
2. Press .
3. Select Options / Child Lock.
4. Press the code letters in an alphabetical order.
5. Turn off the appliance.

Child Lock is activated.
Access to: Timer, Wi-Fi and lamp is available.
The door is locked when the appliance is turned off.

To enable the use of the appliance, press the code letters in an alphabetical order.

To deactivate this function repeat the above steps.

7.4 Automatic switch-off

For safety reasons, if the heating function is active and no settings are changed, the appliance will turn off automatically after a certain period of time.

(°C)	(h)
30 - 115	12.5
120 - 195	8.5
200 - 245	5.5
250 - maximum	3

If you intend to run a heating function for a duration exceeding the automatic switch-off time, set the cooking time. Refer to Clock functions.

The Automatic switch-off does not work with the functions: Light, End time.

7.5 Cooling fan

When the appliance operates, the cooling fan turns on automatically to keep the surfaces of the appliance cool. If you turn off the appliance, the cooling fan can continue to operate until the appliance cools down.

8. CLOCK FUNCTIONS

8.1 Clock functions description

Function	Description
Timer	To set the length of cooking. Maximum is 23 h 59 min. You can set what happens when the time is up by setting the preferred: End Action.

Function	Description
End Action	Sound Alarm - when the time is up the signal sounds. You can set this function at any time, even when the appliance is turned off.
	Sound Alarm and stop cooking - when the time is up the signal sounds and the heating function turns off.
	Pop up message only - when the time is up the message appears on the display. You can set this function at any time, even when the appliance is turned off.

Function	Description
Delayed start	To postpone the start and / or end of cooking.
Time Extension	To extend the cooking time.
Uptimer	To show how long the appliance operates. Maximum is 23 h 59 min. You can turn the function on and off. This function has no effect on the operation of the appliance.

ⓘ

Some clock functions may not be available with certain cooking functions.

8.2 Setting: Time of Day

1. Turn on the appliance.
2. Press: Time of Day.
3. Set the time.
4. Press OK.

8.3 Setting: Timer

1. Choose the heating function and set the temperature.
2. Press ⏲.
3. Set the time.

You can select the preferred End action by pressing • • •.

4. Press OK. Repeat the action until the display shows the main screen.

When 10% of cooking time is left and the food does not seem to be ready, you can extend cooking time. You can also change the heating function. Press **+1min** to extend the cooking time.

8.4 Setting: Delayed start

1. Set the heating function and the temperature.
2. Press ⏲.
3. Set the cooking time.
4. Press • • •.
5. Press: Delayed start.
6. Choose the desired start time.
7. Press OK. Repeat the action until the display shows the main screen.

8.5 Setting: Uptimer

1. Press ⏲.
2. Press • • •.
3. Press: Uptimer.
4. Slide or press to show the running time on the main screen.
5. Press OK. Repeat the action until the display shows the main screen.

8.6 Changing timer settings

You can change the set time during cooking at any time.

1. Press ⏲.
2. Set the timer value.
3. Press OK.

9. USING THE ACCESSORIES

⚠ **WARNING!**

Refer to Safety chapters.

9.1 Inserting accessories

Accessories available depending on model. Scan the QR code to check how to use accessories supplied with your appliance. You can order optional accessories separately. For more information, please contact your local supplier.

A small indentation at the top increases safety and provides tilt protection. The

indentations are also anti-tip devices. The rim around the shelf prevents cookware from slipping off the shelf.

Insert the accessory (wire shelf / tray) between the guide bars of the shelf support. Make sure that the shelf touches the back of the oven interior and the feet point down.

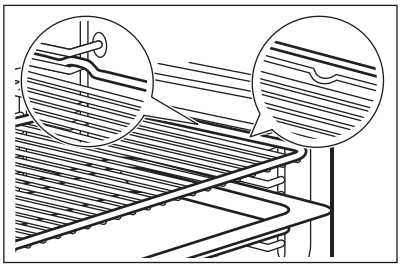

If your tray has a slope, position it towards the back of the oven interior.

If there is an inscription on the accessory, make sure it is facing you.

If you are using a tray with holes place the tray / pan underneath, to collect dripping liquids.

10. HINTS AND TIPS

10.1 Cooking recommendations

The temperature and cooking times in the tables are for guidance only. They depend on the recipes, quality and quantity of the ingredients used.

Your appliance may bake or roast differently than your previous appliance. The hints below show recommended settings for temperature, cooking time and shelf position for specific types of food.

Count the shelf positions from the bottom of the oven floor.

If you cannot find the settings for a specific recipe, look for a similar one.

For energy saving tips refer to Energy efficiency.

Symbols used in the tables:

	Food type
	Heating function
°C	Temperature
	Accessory
	Shelf position
	Cooking time (min)

10.2 Moist Fan Baking - recommended accessories

Use dark and non-reflective tins and containers. They have better heat absorption than light colour and reflective dishes.

- **Pizza pan** - dark, non-reflective, diameter 28 cm
- **Baking dish** - dark, non-reflective, diameter 26 cm
- **Ramekins** - ceramic, diameter 8 cm, height 5 cm
- **Flan base tin** - dark, non-reflective, diameter 28 cm

10.3 Moist Fan Baking

For the best results follow suggestions listed in the table below.

	°C			
Sweet rolls, 16 pieces	180	2	20 - 30	**1)**
Rolls, 9 pieces	180	2	30 - 40	**1)**

	°C			
Pizza, frozen, 0.35 kg	220	2	10 - 15	**2)**
Swiss Roll	170	2	25 - 35	**1)**
Brownie	175	3	25 - 30	**1)**
Soufflè, 6 pieces	200	3	25 - 30	**3)**
Sponge flan base	180	2	15 - 25	**4)**
Victoria sandwich	170	2	40 - 50	**5)**
Poached fish, 0.3 kg	180	3	20 - 25	**1)**
Whole fish, 0.2 kg	180	3	25 - 35	**1)**
Fish fillet, 0.3 kg	180	3	25 - 30	**6)**
Poached meat, 0.25 kg	200	3	35 - 45	**1)**
Shashlik, 0.5 kg	200	3	25 - 30	**1)**
Cookies, 16 pieces	180	2	20 - 30	**1)**
Macaroons, 24 pieces	180	2	25 - 35	**1)**

	°C			
Muffins, 12 pieces	170	2	30 - 40	**1)**
Savory pastry, 20 pieces	180	2	25 - 30	**1)**
Short crust biscuits, 20 pieces	150	2	25 - 35	**1)**
Tartlets, 8 pieces	170	2	20 - 30	**1)**
Vegetables, poached, 0.4 kg	180	3	35 - 45	**1)**
Vegetarian omelette	200	3	25 - 30	**6)**
Mediterranean vegetables, 0.7 kg	180	4	25 - 30	**1)**

1) Use baking tray or dripping pan.
2) Use wire shelf.
3) Use ceramic ramekins on wire shelf.
4) Use flan base tin on wire shelf.
5) Use baking dish on wire shelf.
6) Use pizza pan on wire shelf.

10.4 Information for test institutes

Tests according to IEC 60350-1.

				°C	
Small cakes, 20 per tray	Conventional Cooking	Baking tray	3	170	20 - 35
Small cakes, 20 per tray	True Fan Cooking	Baking tray	3	150 - 160	20 - 35
Small cakes, 20 per tray	True Fan Cooking	Baking tray	2 and 4	150 - 160	20 - 35
Apple pie, 2 tins Ø20 cm	Conventional Cooking	Wire shelf	2	180	70 - 90
Apple pie, 2 tins Ø20 cm	True Fan Cooking	Wire shelf	2	160	70 - 90
Fatless sponge cake, cake mould Ø26 cm **1)**	Conventional Cooking	Wire shelf	2	170	40 - 50
Fatless sponge cake, cake mould Ø26 cm **1)**	True Fan Cooking	Wire shelf	2	160	40 - 50
Fatless sponge cake, cake mould Ø26 cm **1)**	True Fan Cooking	Wire shelf	2 and 4	160	40 - 60
Shortbread	True Fan Cooking	Baking tray	3	140 - 150	20 - 40
Shortbread	True Fan Cooking	Baking tray	2 and 4	140 - 150	25 - 45
Shortbread	Conventional Cooking	Baking tray	3	140 - 150	25 - 45

Toast[1)]	Grill	Wire shelf	4	max.	1 - 5

1) Preheat the appliance for 10 minutes.

11. CARE AND CLEANING

⚠ WARNING!
Refer to Safety chapters.

11.1 Notes on cleaning

Cleaning agents

- Clean the front of the appliance only with a microfibre cloth with warm water and a mild detergent.
- Use a cleaning solution to clean metal surfaces.
- Clean stains with a mild detergent.

Everyday use

- Clean the interior of the appliance after each use. Fat accumulation or other residue may cause fire.
- Moisture can condense in the appliance or on the door glass panels. To decrease the condensation, let the appliance work for 10 minutes before cooking. Do not store food in the appliance for longer than 20 minutes. Dry the interior of the appliance only with a microfibre cloth after each use.

Accessories

- Clean all accessories after each use and let them dry. Use only a microfibre cloth with warm water and a mild detergent. Do not clean the accessories in a dishwasher.
- Do not clean the non-stick accessories using abrasive cleaner or sharp-edged objects.

11.2 Removing the shelf supports

Remove the shelf supports to clean the appliance.

1. Turn off the appliance and wait until it is cold.
2. Pull the front of the shelf support away from the side wall.
3. Pull the rear end of the shelf support away from the side wall and remove it.

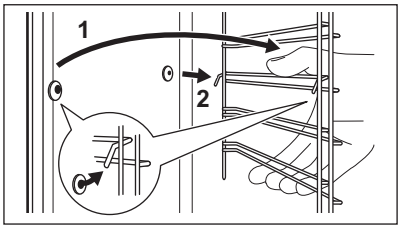

4. Put the shelf supports back to the initial position. Repeat the steps in the reverse order.

If the telescopic runners are supplied, its retaining pins must point to the front.

11.3 Pyrolytic Cleaning

Use it to clean the appliance and burn off the residues.

⚠ WARNING!
There is a risk of burns.

⚠ CAUTION!
If there are other appliances installed in the same cabinet, do not use them at the same time as this function. It can cause damage to the oven.

Do not start the function if you did not fully close the oven door.

1. Make sure the appliance is cold.
2. Remove all accessories.
3. Clean the oven interior and the inner door glass with warm water, a soft cloth and a mild detergent.
4. Turn on the appliance.
5. Press ☰ / Cleaning.
6. Select the cleaning mode.

When the cleaning starts, the oven door is locked and the lamp is off. The cooling fan works at a higher speed.

STOP - press to stop the cleaning before it is completed.
Do not use the appliance until the door lock symbol disappears from the display.

7. When the cleaning ends, turn off the appliance and wait until it is cold.
8. Clean the oven interior with a soft cloth. Remove the residue from the bottom of the oven.

11.4 Cleaning Reminder

When the reminder appears, cleaning is recommended.

Use the function: Pyrolytic Cleaning.

11.5 Removing and installing door

You can remove the oven door and the internal glass panels to clean them. Read the whole "Removing and installing door" instruction before you remove the glass panels.

⚠ CAUTION!

Do not use the appliance without the glass panels.

1. Open the door fully and hold both hinges.

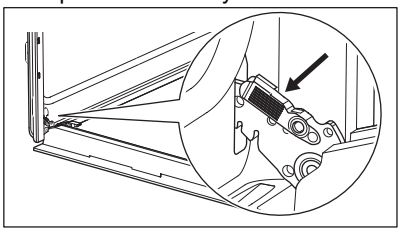

2. Lift and pull the latches until they click.

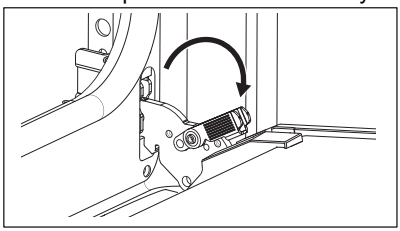

3. Close the oven door halfway to the first opening position. Then lift and pull to remove the door from its seat.

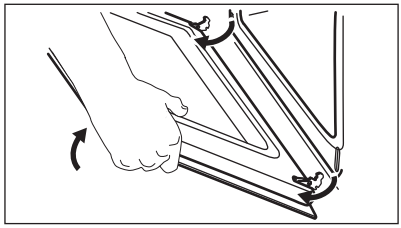

4. Put the door on a soft cloth on a stable surface.
5. Hold the door trim **A** on the top edge of the door at the two sides and push inwards to release the clip seal.

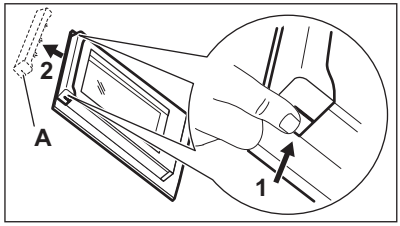

6. Pull the door trim to the front to remove it.
7. Hold the door glass panels on their top edge one by one and pull them up out of the guide. Make sure the glass slides out of the supports completely.

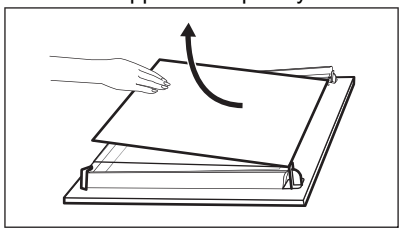

8. Clean the glass panels with water and soap. Dry the glass panels carefully. Do not clean the glass panels in the dishwasher.
9. After cleaning, install the glass panels and the oven door. Make sure that you put the glass panels back in the correct sequence. Check for the symbol / printing on the side of the glass panel. If the door is installed correctly, you will hear a click when closing the latches.

ⓘ

The printing zone **B** (if present) must face the oven interior.

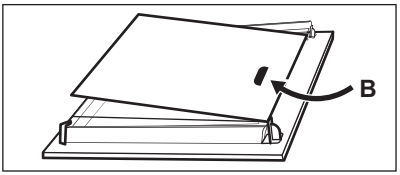

11.6 Replacing the lamp

⚠ WARNING!

Risk of electric shock.
The lamp can be hot.

1. Turn off the appliance and wait until it is cold.
2. Disconnect the appliance from the mains.
3. Place the cloth on the oven floor.

⚠ CAUTION!

Always hold the halogen lamp with a cloth to prevent grease residue from burning on the lamp.

Back lamp

1. Turn the glass cover to remove it.
2. Clean the glass cover.
3. Replace the lamp with a suitable 300°C heat-resistant lamp.
4. Install the glass cover.

12. TROUBLESHOOTING

⚠ WARNING!

Refer to Safety chapters.

12.1 What to do if...

Problem description	Cause and remedy
You cannot activate or operate the appliance.	The appliance is not connected to an electrical supply or it is connected incorrectly.
The appliance does not heat up.	The clock is not set. To set the clock refer to Clock functions.
	The door is not closed correctly.
	The fuse is blown. Make sure the fuse is the cause of the problem. If the problem recurs, contact a qualified electrician.
	Child Lock is activated.
The lamp is turned off.	The lamp is burnt out. Replace the lamp. For details refer to Care and cleaning.
ⓘ Power cut always stops cleaning. Repeat cleaning if it's interrupted by power failure.	
Trouble with wireless network signal.	Check if your mobile device is connected to the wireless network. Check your wireless network and router. Restart the router.
New router installed or router configuration changed.	To configure appliance and mobile device again, refer to Before first use, Wireless connection.
The wireless network signal is weak.	Move router as close to the appliance as possible.

Problem description	Cause and remedy
The wireless signal is disrupted by microwave oven placed near the appliance.	Turn off the microwave oven. Avoid using microwave oven and the Remote operation of the appliance at the same time. Microwaves disrupt WiFi signal.
PizzaExpert function stops and an initial message appears on the display.	You changed the temperature during the preheating phase. Press Next on the first message, then press Start to resume preheating with the newly set temperature.

12.2 Error codes

When the software error occurs, the display shows error message. You will find the list of problems in the table below. When the following error message continues to appear on the display, it means a faulty subsystem may have been disabled. In such a case contact your dealer or an Authorized Service Centre.

Code and description	Remedy
F102 - the door is not fully closed or the door lock is broken.	Close the door. Turn the appliance off and on.
F240, F439 - the touch fields on the display do not work properly.	Clean the surface of the display. Make sure there is no dirt on the touch fields.
F601 - there is a problem with Wi-Fi signal.	Check your network connection. Refer to Before first use, Wireless connection.
F604 - the first connection to Wi-Fi failed.	Turn the appliance off and on and try again. Refer to Before first use, Wireless connection.
F908 - the appliance system cannot connect with the control panel.	Turn the appliance off and on.
F602, F603 - Wi-Fi is not available. **1)**	Turn the appliance off and on.

1) If one of these errors occurs, the rest of the appliance functions will continue to work as usual.

12.3 Service data

If you cannot find a solution to the problem yourself, contact your dealer or an Authorised Service Centre.

The necessary data for the service centre is on the rating plate. The rating plate is located on the front frame of the appliance. It is visible when you open the door. Do not remove the rating plate from the appliance.

We recommend that you write the data here:

Model (MOD.) :
Product number (PNC):
Serial number (S.N.):

13. ENERGY EFFICIENCY

13.1 Product Information Sheet and Product Information according to (EU) No 65/2014 and (EU) No 66/2014

Supplier's name	Electrolux

Model identification	COX8P08WH 949288111 EOX8P08WH 949288110 Y8POX28Z 949288118	
Energy Efficiency Index	61.2	
Energy efficiency class	A++	
Energy consumption with a standard load, conventional mode	0.93 kWh/cycle	
Energy consumption with a standard load, fan-forced mode	0.52 kWh/cycle	
Number of cavities	1	
Heat source	Electricity	
Volume	72 l	
Type of oven	Built-In Oven	
Mass	COX8P08WH	36.4 kg
	EOX8P08WH	36.4 kg
	Y8POX28Z	37.3 kg

Appliance tested according to: EN IEC 60350-1.

13.2 Information requirements according to (EU) No 2023/826

Power consumption in standby	0.8 W
Power consumption in network standby	2.0 W
Maximum time needed for the equipment to automatically reach the applicable low power mode	20 min

Appliance tested according to: EN 50564, EN 63474.

For guidance on how to activate and deactivate the wireless network connection, refer to Before first use.

13.3 Energy saving tips

Following tips below will help you save energy when using your appliance.

Make sure that the appliance door is closed when the appliance operates. Do not open the appliance door too often during cooking. Keep the door gasket clean and make sure it is well fixed in its position.

Use metal cookware and dark, non-reflective tins and containers to improve energy saving.

Do not preheat the appliance before cooking unless specifically recommended.

Keep breaks between baking as short as possible when you prepare a few dishes at one time.

Cooking with fan
When possible, use the cooking functions with fan to save energy.

Residual heat
When the cooking duration is longer than 30 min, reduce the appliance temperature to minimum 3 - 10 min before the end of cooking. The residual heat inside the appliance will continue to cook.

Use the residual heat to keep the food warm or warm up other dishes.

When you turn off the appliance, the display shows the residual heat or temperature.

If a programme with Duration is activated and the cooking time is longer than 30 min, the heating elements automatically turn off earlier in some appliance functions.

Keep food warm
Choose the lowest possible temperature setting to use residual heat and keep the food warm. The residual heat indicator or temperature appears on the display.

Cooking with the lamp off
Turn off the lamp during cooking. Turn it on only when you need it.

Moist Fan Baking
Function designed to save energy during cooking.

When you use this function the lamp automatically turns off after 30 sec. You may turn on the lamp again but this action will reduce the expected energy savings.

Wi-Fi
When possible, turn off the Wi-Fi to save energy.

14. ENVIRONMENTAL CONCERNS

Recycle materials with the symbol . Put the packaging in relevant containers to recycle it. Help protect the environment and human health by recycling waste of electrical and electronic appliances. Do not dispose of appliances marked with the symbol with the household waste. Return the product to your local recycling facility or contact your municipal office.

electrolux.com

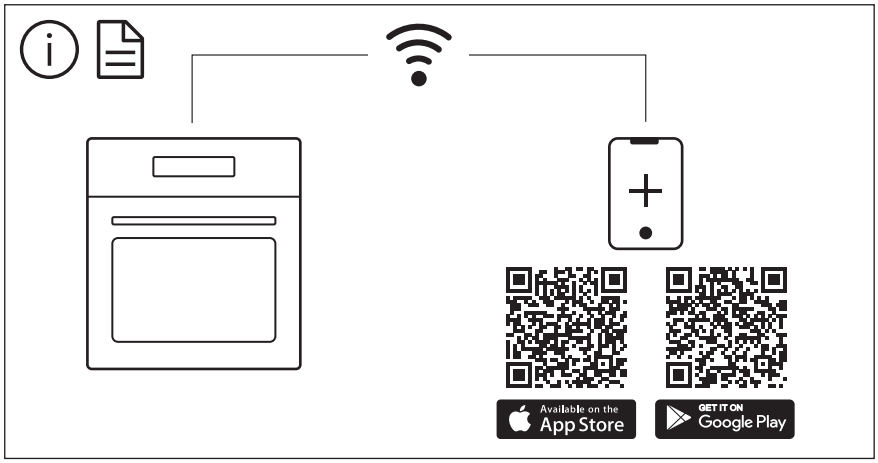

701131886-B-162026