AEG

aeg.com/register

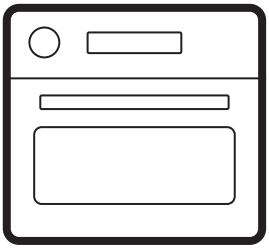

PCQ10B0T0
TK9NK82XDT

INSTALLATION

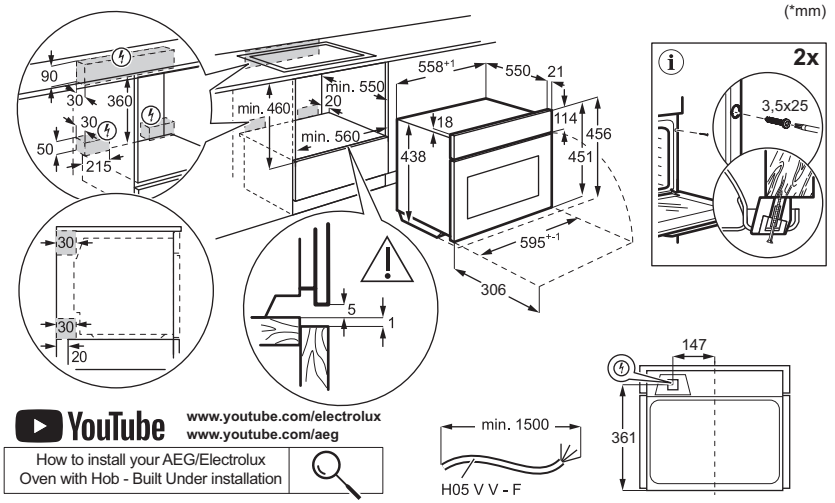

YouTube www.youtube.com/electrolux www.youtube.com/aeg

How to install your AEG/Electrolux Oven with Hob - Built Under installation

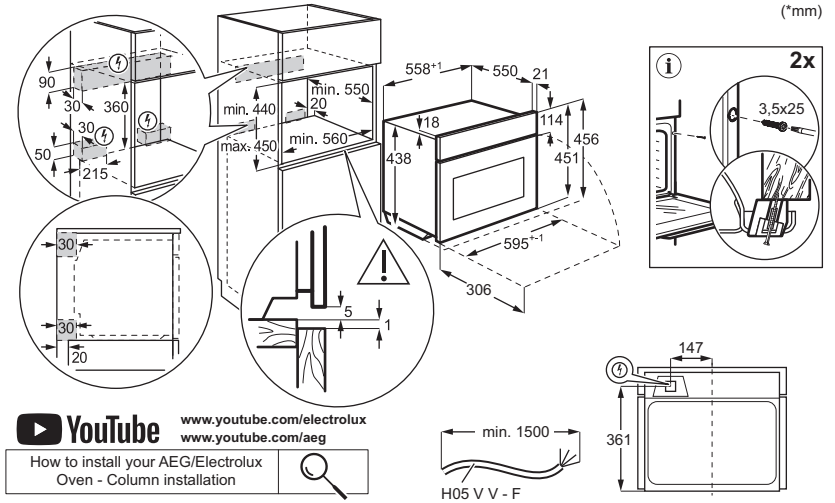

YouTube www.youtube.com/electrolux www.youtube.com/aeg

How to install your AEG/Electrolux Oven - Column installation

ENGLISH

1. SAFETY INFORMATION..... 3
2. SAFETY INSTRUCTIONS..... 6
3. PRODUCT DESCRIPTION..... 8
4. BEFORE FIRST USE..... 8
5. DAILY USE..... 9
6. HINTS AND TIPS..... 12
7. CARE AND CLEANING..... 15
8. TROUBLESHOOTING..... 15
9. ENERGY EFFICIENCY..... 16
10. ENVIRONMENTAL CONCERNS..... 16

Subject to change without notice.

1. ⚠ SAFETY INFORMATION

Before the installation and use of the appliance read the supplied instructions carefully. The manufacturer is not responsible for any injuries or damage that result from incorrect installation or usage. Always keep the instructions in a safe and accessible location for future reference.

1.1 Children and vulnerable people safety

- This appliance can be used by children aged from 8 years and above and persons with reduced physical, sensory or mental capabilities or lack of experience and knowledge if they have been given supervision or instruction concerning the use of the appliance in a safe way and understand the hazards involved. Children of less than 8 years of age and persons with very extensive and complex disabilities shall be kept away from the appliance unless continuously supervised.
- Children should be supervised to ensure that they do not play with the appliance and mobile devices with the app.
- Keep packaging away from children and dispose of it properly.
- WARNING: The appliance and its accessible parts become hot during use. Keep children and pets away during use and cooling.
- Activate the child safety device, if available.
- Children must not clean or maintain the appliance without supervision.

1.2 General Safety

- This appliance is for cooking purposes only.
- This appliance is designed for single household do-

mestic use in an indoor environment.
- This appliance may be used in offices, hotel guest rooms, bed & breakfast guest rooms, farm guest houses, and other similar accommodation where such use does not exceed average domestic usage levels.
- Do not use the appliance before installing it in the built-in structure.
- Disconnect the appliance from the power supply before carrying out any maintenance.
- If the supply cord is damaged, it must be replaced by the manufacturer, its authorised service centre or similarly qualified persons to avoid an electrical hazard.
- WARNING: Ensure that the appliance is switched off before replacing the lamp to avoid the possibility of electric shock.
- WARNING: The appliance and its accessible parts become hot during use. Care should be taken to avoid touching heating elements or the surface of the appliance cavity.
- Always use oven gloves to remove or insert accessories or ovenware.
- Use only the food sensor (core temperature sensor) recommended for this appliance.
- Do not install the appliance behind a decorative door in order to avoid overheating.
- WARNING: If the door or door seals are damaged, do not operate the appliance until repaired by a qualified person.
- WARNING: Only a qualified person should perform service or repair operations involving the removal of covers protecting against microwave energy exposure.
- WARNING: Liquids and other foods must not be heated in sealed containers since they are liable to explode.
- Use only utensils suitable for microwave ovens.
- Do not activate the microwave function when the appliance is empty to avoid electric arcing.
- Metallic containers for food and beverages are not allowed during microwave cooking. This requirement is not applicable if the man-

ufacturer specifies size and shape of metallic containers suitable for microwave cooking.
- Observe the appliance when heating food in plastic or paper containers to prevent ignition.
- The appliance is intended for heating food and beverages. Drying of food or clothing and heating of warming pads, slippers, sponges, damp cloth and similar may lead to risk of injury, ignition or fire.
- If smoke is emitted, switch off or unplug the appliance and keep the door closed in order to stifle any flames.
- Microwave heating of beverages can result in delayed eruptive boiling. Care must be taken when handling the container.
- Stir or shake the contents of feeding bottles and baby food jars and check the temperature before consumption to avoid burns.
- Do not heat eggs in their shells or whole hard-boiled eggs as they may explode, even after microwave heating has ended.
- To remove the shelf supports first pull the front of the shelf support and then the rear end away from the side walls. Install the shelf supports in the opposite sequence.
- Clean the appliance regularly and remove any food deposits.
- Do not use a steam cleaner to clean the appliance.
- Do not use harsh abrasive cleaners or sharp metal scrapers to clean the glass door since they can scratch the surface, which may result in shattering of the glass.
- Failure to maintain the appliance in a clean condition could lead to deterioration of the surface that could adversely affect the life of the appliance and possibly result in a hazardous situation.

2. SAFETY INSTRUCTIONS

2.1 Installation

⚠ WARNING!
Only a qualified person must install this appliance.

- Remove all the packaging.
- Do not install or use a damaged appliance.
- Follow the installation instructions available on our website.
- Be careful when moving the appliance, as it is heavy. Use safety gloves and enclosed footwear.
- Do not pull the appliance by the handle.
- Install the appliance in a safe and suitable location that meets installation requirements.
- Keep the minimum distance from other appliances and units.
- Before mounting the appliance, ensure it is level and that the door opens without any restraint.
- The appliance is equipped with an electric cooling system. It must be operated with the electric power supply.

2.2 Electrical connection

⚠ WARNING!
Risk of fire and electric shock.

- All electrical connections should be made by a qualified electrician.
- Make sure the parameters on the rating plate are compatible with the electrical ratings of the mains power supply.
- The appliance must be earthed. Always use a correctly installed shockproof socket.
- Do not use multi-plug adapters and extension cables.
- Avoid damaging the mains plug and cable. If replacement is needed, it must be done by our Authorized Service Centre.
- Do not let mains cables touch or come near the appliance door or the niche below, especially when it operates or the door is hot.
- Shock protection of live and insulated parts must be fastened securely and should not be removable without tools.
- Connect the mains plug to the socket only at the end of installation. Ensure access to the mains plug after installation.
- If the mains socket is loose, do not connect the mains plug.
- Do not disconnect the appliance by pulling on the mains cable. Always pull on the mains plug.
- Use only correct isolation devices: line protecting cut-outs, fuses (screw type fuses removed from the holder), earth leakage trips and contactors.
- The electrical installation must have an isolation device that disconnects the appliance from the mains at all poles, with a contact opening width of at least 3 mm.
- This appliance is supplied with a main plug and a main cable.

2.3 Use

⚠ WARNING!
Risk of injury, burns and electric shock or explosion.

- Do not modify this appliance.
- Ensure ventilation openings are not blocked.
- Do not let the appliance stay unattended during operation.
- Turn off the appliance after each use.
- Be careful when opening the appliance door during operation, as hot air and flammable mixtures from alcohol ingredients can be released.
- Do not operate the appliance with wet hands or when it comes in contact with water.
- Do not apply pressure on the open door.
- Do not use the appliance as a work surface or as a storage surface.
- Keep sparks and open flames away from the appliance when the door is open.
- Do not place flammable products near the appliance.
- Do not share your Wi-Fi password.
- Do not use microwave function to preheat the appliance.

⚠ WARNING!
Risk of damage to the appliance.

- To prevent damage or discoloration to the enamel:

  - do not place aluminum foil directly on the cavity bottom.
  - do not put water directly into the hot appliance.
  - do not leave moist dishes and food in the appliance after cooking.
  - be careful when removing or installing accessories.
- Enamel or stainless steel discoloration does not affect performance of the appliance.
- Use a deep pan for moist cakes, as fruit juices can cause permanent stains.
- Use only accessories supplied with this appliance or recommended by the manufacturer.
- Always cook with the appliance door closed.
- Ensure that the food sensor is not trapped by the appliance door.
- If the appliance is installed behind a furniture panel, do not close the panel during use or until the appliance is fully cooled to prevent heat and moisture damage.
- Concerning the lamp(s) inside this product and spare part lamps sold separately: These lamps are intended to withstand extreme physical conditions in household appliances, such as temperature, vibration, humidity, or are intended to signal information about the operational status of the appliance. They are not intended to be used in other applications and are not suitable for household room illumination.
- This product contains a light source of energy efficiency class G.
- Use only lamps with the same specifications.
- To repair the appliance contact the Authorised Service Centre. Use original spare parts only.

2.4 Care and cleaning

⚠ WARNING!
Risk of injury, fire, or damage to the appliance.

- Turn off and unplug the appliance before maintenance.
- Ensure the appliance is cold to avoid glass breakage. If the door glass panels are damaged, contact the authorized service centre for replacement.
- Clean and dry the appliance, its cavity, and accessories after each use to prevent steam condensation, corrosion, and surface deterioration.
- Check the product regularly for signs of deterioration that may make it unsuitable for food contact, such as cracks, blisters, delamination, shrinkage, stickiness, corrosion, or other visible changes in texture or appearance. Follow cleaning and care instructions to prevent deterioration.
- Fat and food remaining in the appliance can cause fire and electrical arcing when the microwave function operates.
- Use a microfibre cloth, warm water, and neutral detergents for cleaning the appliance and accessories. Do not use abrasive products, pads, solvents, sharp-edged or metal objects.
- Follow safety instructions on packaging when using an oven spray.

2.5 Disposal

⚠ WARNING!
Risk of injury or suffocation.

- Contact your municipal authority for information on how to dispose of the appliance.
- Disconnect the appliance from the mains, then cut off and dispose of the electrical cable.

3. PRODUCT DESCRIPTION

3.1 General overview

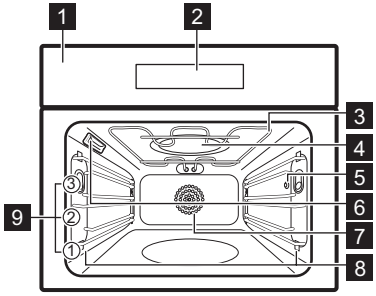

1 Control panel
2 Display
3 Heating element
4 Microwave generator
5 Socket for the food sensor
6 Lamp
7 Fan
8 Shelf support, removable
9 Shelf positions

3.2 Control panel

The display is fully interactive and scrollable. It is divided into clearly defined sections that provide access to various cooking functions and dishes. It also shows the current operating status. You can swipe across the screen to navigate left or right.

Display indicators

	Press and hold to turn the appliance on and off.
	To access key functions and settings.
	To access Dishes submenu with dedicated cooking programmes.
	To save current settings in: Favourites.
	To access microwave functions.
	To turn the options on and off.
	The appliance is locked.
	Delayed start function is activated.
	Wi-Fi connection is turned on.
	Remote Operation is turned on.

4. BEFORE FIRST USE

4.1 Wireless connection

To connect the appliance you need:

- Wireless network with the Internet connection.
- Mobile device connected to the same wireless network.

1. Scan the QR code on the back cover of the user manual to download the app, or download it directly from the app store.
2. Follow the app onboarding instructions.
3. Turn on the appliance.
4. Press menu and select: Settings / Connections.
5. Press to turn on or off: Wi-Fi.

The appliance wireless module starts within 90 sec.

For safety reasons, remote operation turns off automatically after 24 h. Repeat the onboarding, if needed.

Frequency	**2.4 GHz WLAN :** 2400 - 2483.5 MHz
	5 GHz WLAN : 5150 - 5725 MHz
	Bluetooth: 2400 - 2483.5 MHz

Max Power	**2.4 GHz WLAN :** EIRP < 20 dBm (100 mW)
	5 GHz WLAN : EIRP < 23 dBm (200 mW)
	Bluetooth: EIRP < 12 dBm (16 mW)
Protocol	**2.4 GHz WLAN :** IEEE 802.11 b/g/n/ax **5 GHz WLAN :** IEEE 802.11 a/n/ac/ax **Bluetooth**: Low Energy (LE)

Restrictions and requirements in BE, BG, CZ, DK, DE, EE, IE, EL, ES, FR, HR, IT, CY, LV, LT, LU, HU, MT, NL, AT, PL, PT, RO, SI, SK, FI, SE, IS, LI, NO, CH, TR, and UK(NI): This appliance is for indoor use only.

ⓘ When the appliance is connected to the app, it may receive important software updates. These updates can introduce new features, refine existing functions and icons, address potential issues, and enhance overall software performance.
After the update, it is not possible to restore the previous software version.

4.2 Software licences

The software in this product contains components that are based on free and open source software. AEG acknowledges the contributions of the open software and robotics communities to the development project.

To access the source code of these free and open source software components whose license conditions require publishing, and to see their full copyright information and applicable license terms, visit: http://aeg.opensoftwarerepository.com (folder DS8).

4.3 Initial preheating and cleaning

Preheat the empty appliance before the first use. The appliance can emit unpleasant smell and smoke. Ventilate the room.

1. Remove all accessories and shelf supports.
2. Enter the menu and select the cooking function.
3. The display shows a pop-up message to start the preheating process.
4. Confirm to start and follow the instructions on the display.
5. Turn off the appliance and let it cool down.
6. Clean the oven interior with a microfiber cloth, warm water, and mild detergent. Replace accessories and shelf supports.

5. DAILY USE

5.1 Cooking functions

Standard cooking functions for typical baking needs, including top and bottom heating, grilling, fan cooking and more. You can prepare your dishes in a traditional manner. For more information see the description in the display.

1. Enter the menu and select the cooking function.
2. The display shows available settings.
3. Start cooking and follow the instructions on the display.

5.2 Microwave

Microwave energy heats food quickly, enabling efficient reheating, melting, and defrosting.

1. Remove all accessories, except the wire shelf.
2. Press Microwave on the main display.
3. Set the microwave time and power.
4. Confirm to start cooking.
5. ■ - press to turn off the function.

If you open the door, the function stops. To start it again, press ▶.

5.3 Microwave Combination Functions

Microwave combination functions combine standard heating functions with microwave boost to shorten cooking time and improve cooking results.

1. Remove all accessories, except the wire shelf.
2. Select the microwave combination function.
3. The display shows available settings. Set the temperature and the microwave power.
4. Start cooking and follow the instruction on the display.

Food Sensor - you can plug the sensor at any time before or during cooking. Refer to Using the accessories, Food Sensor.

5. ■ - press to turn off the heating function.

5.4 Preheating options

The appliance includes several preheating options to ensure optimal cooking results.

- Standard - basic preheating without speed or energy optimisation.
- Smart - helps optimize energy use during heat up of the oven compared to Fast.
- Fast - faster preheating with slightly higher energy consumption.

5.5 Favourites

You can save your favourite dishes. This allows the oven to automatically recognise them during future use. The camera will detect the dish and suggest the saved program.

To save a setting, select the preferred option and press ♡.

5.6 Timer

To set the cooking time. Maximum is 23 h 59 min.

1. Choose the cooking function and set the temperature.
2. Press and set the time.

You can set a delayed start or specify the cooking end time by pressing .

End Action

Sound Alarm - set a countdown. When the timer ends, the signal sounds.
Sound Alarm and stop cooking - set a countdown. When the timer ends, the signal sounds and the cooking stops.
Pop up message only - when the time is up the message appears on the display.

Some clock functions may not be available with certain cooking functions.

Press +5 min to extend the cooking time.

Delayed start

You can postpone the start and / or end of cooking. Not available for microwave functions.

1. Choose the cooking function and adjust the settings.
2. Press: Delayed start.
3. Scroll to set desired start time and confirm.

5.7 Child lock

This function prevents accidental operation of the appliance.

1. Open the options menu located at the top right of the screen: .
2. Select: Child lock .
3. Confirm the setting to activate it.

The lock remains on until changed.

To temporarily unlock, tap the screen and enter the numbers sequentially from low to high.

If there is no interaction for 30 sec, the Child lock will reactivate automatically.

To fully deactivate, return to the options menu and select Child lock again.

5.8 Dishes

Assisted cooking suggests settings for different dishes, including step-by-step instructions, temperature, and cook time. You can change the settings during cooking if needed. You can choose your preferred cooking method, add the food sensor or use the camera. The availability of each option depends on the selected dish.

1. Enter the menu and select .
2. Choose a food type and dish and follow the steps on screen.

When the function ends, check if the food is ready. Extend the cooking time if needed.

5.9 Accessories

Accessories available depending on model. Scan the QR code to check how to use accessories supplied with your appliance. You can order optional accessories separately. For more information, please contact your local supplier.

Use only suitable cookware and material. Refer to Hints and tips chapter, Microwave suitable cookware and materials.

Insert the accessory (wire shelf / tray) between the guide bars of the shelf support. Make sure that the shelf touches the back of the oven interior and the feet point down. A small indentation at the top increases safety and provides tilt protection. The rim around the shelf prevents cookware from slipping off the shelf.

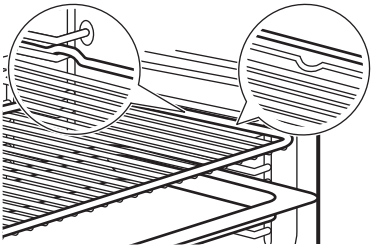

If your tray has a slope, position it towards the back of the oven interior.

If your wire shelf has a step, position it towards the front of the oven interior.

If there is an inscription on the accessory, make sure it is facing you.

If you are using a tray with holes, place the tray / pan underneath to collect dripping liquids.

5.10 Food Sensor

It measures the temperature inside the food. You can use it with standard and microwave combi cooking functions.

There are two temperatures to be set:

- °C - the oven temperature. It should be at least 25°C higher than the food sensor temperature.
- - the food sensor temperature.

1. Select a cooking function from the menu: Functions or a dish from the menu: Dishes.
2. Set the oven temperature and cooking time if needed.
3. Insert the tip of the food sensor into the centre of the thickest part of the meat or fish. For casseroles, place the tip of the food sensor exactly in the centre, stabilized in a solid ingredient. Make sure the tip does not touch the bottom of the baking dish.

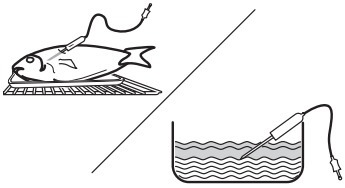

4. Plug the food sensor into the socket located inside the appliance. Refer to Product description.
5. Confirm to start cooking.

The display shows the symbol and the current food sensor temperature.

6. When the food reaches the set temperature, the signal sounds. Check if the food is ready. Extend the cooking time if needed.
7. - press to turn off the cooking function.
8. Unplug the food sensor and remove the dish from the appliance.

5.11 Mechanical door lock

To lock the door: pull the door lock forward until it locks.

To unlock the door: push the door lock back into the panel.

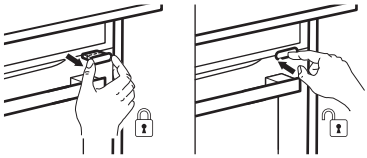

You can open the door when the door lock is locked.

1. Push the door lock slightly.
2. Open the door by pulling it with the handle.

When you close the door make sure that the door lock remains locked.

6. HINTS AND TIPS

6.1 Cooking recommendations

The temperature and cooking times in the tables are for guidance only. They depend on the recipes, quality and quantity of the ingredients used. If you cannot find the settings for a specific recipe, look for a similar one.

Cooking and baking processes are only suitable on one level.

Count the shelf positions from the bottom of the oven floor.

Symbols used in the tables:

	Food type
	Cooking function
°C	Temperature
POWER	Microwave power (W)
	Shelf position
	Cooking time (min)
	Additional information

6.2 Moist Fan Baking

		°C		
Pasta gratin	1	200	45 - 60	1)
Potato gratin	1	180	80 - 100	1)
Moussaka	1	180	75 - 90	1)
Lasagne	1	180	70 - 90	1)
Cannelloni	1	200	65 - 80	1)
Bread pudding	1	190	60 - 80	1)
Rice pudding	1	180	80 - 100	1)
Apple Cake	1	160	100 - 120	1)
White bread	1	200	80 - 100	2)

1) Use wire shelf.
2) Use baking tray with the slope towards the back of the oven interior.

6.3 Information for test institutes

Baking on one level

Tests according to EN 60350-1, IEC 60350-1.

		°C		
Small cakes, 20 per tray				
	2	150	18 - 28	1)2)
	2	150	18 - 28	1)2)
Fatless sponge cake				
	1	170	25 - 35	3)2)
	1	170	28 - 38	3)2)
Short bread				
	2	140	28 - 38	1)2)
	2	140	25 - 35	1)2)
Apple pie				
	1	170	65 - 75	3)4)
	1	170	57 - 67	3)4)
Toast				
	2	230	7 - 12	3)2)5)

1) Use the baking tray with the slope towards the back of the oven interior. It must touch the fan cover.
2) Preheat the appliance until set temperature is reached using the setting: Preheat / Standard. Do not use: Preheat / Fast and Smart. Refer to Daily use, Preheating options.
3) Use wire shelf.
4) 2 tins placed diagonally (Ø 20 cm). The right one to be positioned more in the front than the left one.
5) According to: IEC 60350-1:2016 and IEC 60350-1:2023.

Microwave and microwave combi functions

Tests according to EN 60705, IEC 60705.

		POWER	°C		
Sponge cake					
	1	500	-	8 - 10	1)2)
Meatloaf					
	1	300	-	30 - 35	1)2)3)

Egg custard					
	1	400	-	18 - 23	1)4)
Defrosting minced meat (500 g)					
	1	200	-	7 - 8	1)5)
Cake					
	1	200	170	22 - 27	1)4)
Potato gratin					
	1	200	180	35 - 40	1)6)
Chicken (1100 g)					
	1	200 / -	200	30 / 18 - 23	1)7)

1) Use wire shelf. It must touch the fan cover.
2) Turn container around by 1/2, halfway through the cooking time.
3) Use MW suitable clingfilm during cooking. Prick the clingfilm several times before cooking.
4) Do not turn the food during the cooking process.
5) Turn the meat upside down over the longest side, one time after 1/3 and a second time after 2/3 of the elapsed cooking time.
6) Turn container clockwise by 1/4, halfway through the cooking time.
7) Place a plate at the bottom of the oven. Place chicken directly on wire shelf with breast side down. After 30 min, turn the chicken upside down and change the heating function to: Hot air & Top.

Additional recipes

Meringues					
	2	-	100	90 - 180	1)2)3)
	2	-	100	90 - 180	1)2)3)
Scones					
	3	-	200	11 - 13	1)3)
	3	-	190	10 - 12	1)3)
Chicken					
	1	-	200	65 - 75	1)4)

Popcorn					
	-	700	-	3 - 4	5)6)
Plated meals, chilled (1 portion)					
	1	500	-	7 - 9	7)8)9)
Liquids in baby bottles					
	-	1000	-	0.5	10)
Lasagne, frozen (400 g)					
	1	100	210	23 - 28	7)11)
Lasagne, frozen (600 g)					
	1	200	190	48 - 53	7)11)
Pizza, frozen					
	1	200	210	12 - 16	7)11)

1) Use baking tray with the slope towards the back of the oven interior.
2) Use baking paper.
3) Preheat the appliance until set temperature is reached using the setting: Preheat / Standard. Do not use: Preheat / Fast and Smart. Refer to Daily use, Preheating options.
4) Place chicken with breast side down. Turn it upside down halfway through the cooking time.
5) Use flat ceramic plate on the cavity bottom.
6) The bag should be taken out of the appliance when the kernels stop popping.
7) Use wire shelf. It must touch the fan cover.
8) Cover the food with a microwavable plastic lid.
9) Turn container around by 1/2, halfway through the cooking time.
10) Position the bottle in the centre of the cavity bottom without using any accessories.
11) Do not turn the food during the cooking process.

6.4 Microwave recommendations

Place the food in the centre of the wire shelf. Use first shelf position.

Turn or stir food halfway through cooking.

Stir liquid dishes occasionally and before serving.

When heating liquids, place a spoon in the cup to improve heat distribution and prevent overboiling. The spoon must not touch the oven interior to avoid sparking.

Do not cover food when using Microwave combi functions. Refer to Daily use.

Do not use Microwave or Microwave Combi functions without food inside the appliance.

Microwave cooking

Cover food when cooking or reheating. To keep a crust, cook without a cover.

Do not set the power or time too high to avoid drying, burning or fire.

Do not cook eggs or snails in shells; they can burst. Pierce the yolk of a fried egg before reheating.

Pierce food with skin or peel several times before cooking.

Cut vegetables into similar-sized pieces.

After cooking, let food stand for a few minutes for even heat distribution.

Microwave defrosting

Place the frozen, unwrapped food on a small upturned plate with a container below it, or on a defrosting rack or plastic sieve so liquids can drain

Remove defrosted pieces as they thaw.

To cook fruit and vegetables without defrosting, use a higher microwave power.

Turning improves results. For sensitive foods like meat, turn them upside down twice during defrosting.

6.5 Microwave suitable cookware and materials

For the microwave use only suitable cookware and materials. Use below table as a reference.

Check the cookware / material / food container specification before use.

For other specific microwave cookware not listed in this table, follow manufacturer instructions.

Cookware / Material			
Ovenproof glass and porcelain with no metal parts	✓	✓	✓
Non-ovenproof glass and porcelain without metal decorations	✓	✗	✗
Ovenproof/frost-proof glass and glass-ceramic	✓	✓	✓
Ovenproof ceramic and earthenware without quartz or metal components or metal-containing glazes	✓	✓	✓
Ceramic, porcelain and earthenware with unglazed bottom or with small holes, e.g. on handles	✗	✗	✗
Heat-resistant plastic up to 200°C	✓	✓	✗
Cardboard, paper only	✓	✗	✗
Clingfilm	✓	✗	✗
Microwave clingfilm	✓	✓	✗
Metal roasting dishes (e.g., enamel, cast iron)	✗	✗	✗
Baking tins, black lacquer or silicon-coated	✗	✗	✗
Baking tray	✗	✗	✗
Wire shelf	✓	✓	✓

6.6 Power settings

Below data is for guidance only.

800 - 1000 W

- Heating up liquids

600 - 700 W

- Simmering rice
- Cooking vegetables
- Popcorn

400 - 500 W

- Heating one-plate meals
- Simmering stews
- Defrosting and heating ready frozen meals

300 W

- Cooking / Heating delicate food
- Heating baby food
- Continuing cooking

100 - 200 W

- Defrosting bread, fruit, cakes, pastries, cheese, butter, meat and fish
- Melting chocolate and butter

7. CARE AND CLEANING

7.1 Notes on cleaning

- Use a cleaning solution for metal surfaces.
- Use a special oven cleaner for stubborn stains.
- Use the liquid descaler recommended by the manufacturer to remove limestone residue.
- Do not store food in the appliance for longer than 20 minutes.
- Do not clean the accessories in a dishwasher.

7.2 Removing the shelf supports

1. Make sure the appliance is cold.
2. Carefully pull the shelf supports up and out of the front catch.
3. Pull the supports out of the rear catch.
4. Put the shelf supports back to the initial position. Repeat the steps in the reverse order.

If the telescopic runners are supplied, their retaining pins must point to the front.

7.3 Replacing the lamp

Only service is allowed to replace the lamp. Contact your Authorised Service Centre.

8. TROUBLESHOOTING

If you cannot find a solution to the problem yourself, contact your dealer or an Authorised Service Centre. Service details are on the rating plate, located on the front frame. It is visible when you open the door. Do not remove the rating plate.

If the display shows an error code that is not indicated below, turn the house fuse off and on to restart the appliance. If the error code recurs contact an Authorised Service Centre.

You cannot activate or operate the appliance. - The appliance is not connected to an electrical supply or it is connected incorrectly.

The appliance does not heat up.

- Child lock is activated.
- Automatic switch-off is activated.
- Demo Mode is activated - deactivation code: 2468.

The lamp does not work. - The lamp is burnt out. Replace the lamp.

The lamp is turned off. - Moist Fan Baking is activated.

Trouble with wireless network signal (selected models only). - Check if your mobile device is connected to the wireless network. Check your wireless network and router. Restart the router.

New router installed or router configuration changed (selected models only). - Configure appliance and mobile device again.

The wireless network signal is weak (selected models only). - Move router as close to the appliance as possible.

The wireless signal is disrupted by microwave oven placed near the appliance (selected models only). - Turn off the microwave oven. Avoid using microwave oven and the Remote operation of the appliance at the same time. Microwaves disrupt Wi-Fi signal.

F111 - Food Sensor is not correctly inserted into the socket. Fully plug Food Sensor into the socket.

F240 - the touch fields on the display do not work properly. Clean the surface of the display. Make sure there is no dirt on the touch fields.

F601 - there is a problem with Wi-Fi signal. Check your network connection. Refer to Before first use, Wireless connection.

F604 - the first connection to Wi-Fi failed. Turn the appliance off and on and try again. Refer to Before first use, Wireless connection.

F908 - the appliance system cannot connect with the control panel. Turn the appliance off and on.

F131 - the temperature of magnetron sensor is too high. [1] Turn the appliance off and wait until it cools down. Turn the appliance on again.

[1] If one of these errors occurs, the rest of the appliance functions will continue to work as usual.

F603 - Wi-Fi is not available. [1] Turn the appliance off and on.

9. ENERGY EFFICIENCY

9.1 Information requirements according to (EU) No 2023/826

Power consumption in standby	0.8 W
Power consumption in network standby	2.0 W
Maximum time needed for the equipment to automatically reach the applicable low power mode	20 min

Appliance tested according to: EN 50564, EN 63474.

For guidance on how to activate and deactivate the wireless network connection, refer to Before first use.

9.2 Optimization tips

- Keep the door closed during cooking and avoid opening it often.
- Keep the door gasket clean and make sure it is well fixed in its position.
- Use metal or dark, non-reflective cookware (only when you use a non-microwave function).
- Skip preheating unless needed.
- Minimize breaks between baking multiple dishes.
- When possible, use the cooking functions with fan (selected models only).
- Use residual heat to keep food warm. Reduce the appliance temperature to minimum 3 - 10 min before the end of cooking.
- Turn off the lamp during cooking unless needed.
- When possible, turn off the Wi-Fi. Refer to Before first use.
- Automatic switch-off - for safety reasons, if the cooking function is active and no settings are changed, the appliance will turn off automatically after a certain period of time. To operate a cooking function longer, set the cooking time.
  - 12.5 h: 30-115 °C
  - 8.5 h: 120-195 °C
  - 5.5 h: 200-245 °C
  - 3 h: 250-maximum °C

10. ENVIRONMENTAL CONCERNS

Recycle materials with the symbol ♺. Put the packaging in relevant containers to recycle it. Help protect the environment and human health by recycling waste of electrical and electronic appliances. Do not dispose of appliances marked with the symbol ⍁ with the household waste. Return the product to your local recycling facility or contact your municipal office.

[1] If one of these errors occurs, the rest of the appliance functions will continue to work as usual.