ThinkPad P1 Gen 7 Linux
User Guide



Read this first

Before using this documentation and the product it supports, ensure that you read and understand the following:

- *Safety and Warranty Guide*
- *Setup Guide*
- *Generic Safety and Compliance Notices*

Second Edition (June 2025)

© Copyright Lenovo 2024, 2025.

LIMITED AND RESTRICTED RIGHTS NOTICE: If data or software is delivered pursuant to a General Services Administration “GSA” contract, use, reproduction, or disclosure is subject to restrictions set forth in Contract No. GS-35F-05925.

Contents

About this documentation iii

Chapter 1. Meet your computer 1

Front 1
Left and right 3
Bottom 5
USB connectors 6

Chapter 2. Get started with your computer 7

Get started with your desktop 7
- Launch an app 7
- Launch settings 7
- Get support 7

Manage networks 7
- Connect to Wi-Fi networks 8
- Airplane mode 8

Interact with your computer 8
- Use the camera 8
- Use the keyboard shortcuts 8
- Use the TrackPoint pointing device 9
- Use the Haptic Touchpad 10
- Use the touch gestures 11
- Use the multi-touch screen (for selected models) 12
- Connect to an external display 13

Chapter 3. Explore your computer . . 15

Use the Intelligent Cooling feature 15
Use the P-to-P 2.0 charging function 15
Set the power plan 16
Connect to a Bluetooth-enabled device 16
Enabling Nvidia proprietary drivers in Fedora (for selected models) 16

Chapter 4. Secure your computer and information 17

Lock the computer 17
Use the fingerprint reader (for selected models) . . 17
Use passwords 18
- Password types 18
- Set, change, or remove a password 19

Use Power Loss Protection function (for selected models) 20
USB-C Restricted Mode 20

Chapter 5. Configure advanced settings 23

UEFI BIOS 23
- What is UEFI BIOS 23
- Enter the UEFI BIOS menu 23
- Navigate in the UEFI BIOS interface 23
- Change the startup sequence 23
- Detect memory retraining 24
- Set the system date and time 24
- Recover the UEFI BIOS 24
- Update UEFI BIOS 24

Chapter 6. CRU replacement 27

CRU list 27
Before you replace any CRU 27
- Disable Fast Startup 27
- Disable the built-in battery 27

Replace a CRU 28
- Base cover assembly 28
- Built-in battery 29
- CAMM2 top cover 32
- CAMM2 memory module 36
- CAMM2 connector 38
- M.2 solid-state-drive and M.2 solid-state drive bracket 40
- Speaker assembly 42

Chapter 7. Help and support 45

Frequently asked questions 45
Error messages 46
Self-help resources 47
- Access product documentation 47
- Visit the Lenovo support Web site 47
- Access the Lenovo Limited Warranty 47
- Access Linux distributions 47
- Get support information 47
- Access open-source information 48

Call Lenovo 48
- Before you contact Lenovo 48
- Lenovo Customer Support Center 49

Purchase additional services 50

Appendix A. Compliance information 51

Appendix B. Accessibility features . . 53

Appendix C. Notices and trademarks 55

© Copyright Lenovo 2024, 2025

About this documentation

- Illustrations in this documentation might look different from your product.
- Depending on the model, some optional accessories, features, software programs, and user interface instructions might not be applicable to your computer.
- Documentation content is subject to change without notice. To get the latest documentation, go to https://pcsupport.lenovo.com.

© Copyright Lenovo 2024, 2025

Chapter 1. Meet your computer

Front

Have a quick glance at the front view of your computer.



Item	Description	Item	Description
	Webcam privacy shutter*		Microphone*
	Infrared camera*		Touch screen*
	Power button with fingerprint reader		TrackPoint® pointing stick

© Copyright Lenovo 2024, 2025

Item	Description	Item	Description
	NFC (near field communication) label*		Haptic Touchpad
	TrackPoint Three Buttons		

* for selected models

 **Webcam privacy shutter**

Slide the webcam privacy shutter to cover or uncover the camera lens. It is designed to protect your privacy.

Left and right

Have a quick glance at ports on both sides of your computer.

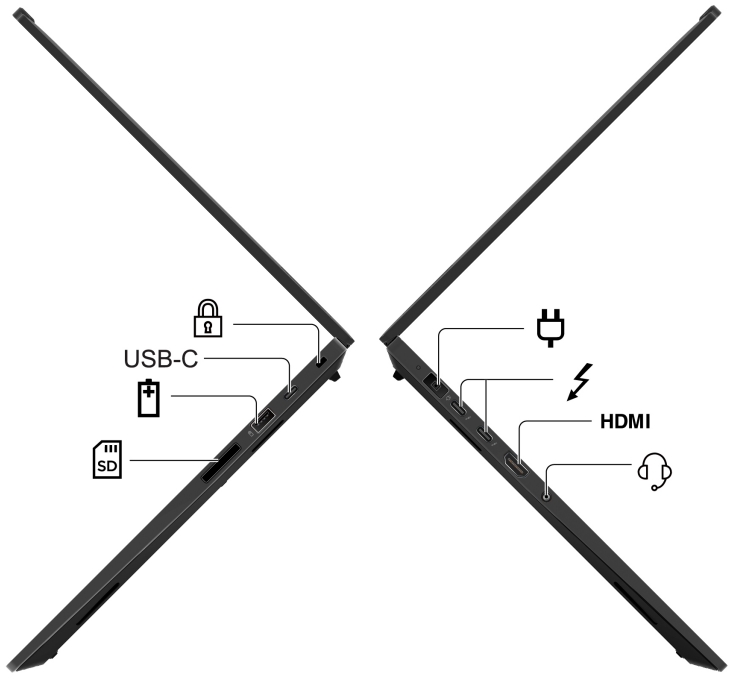

Item	Description	Item	Description
	Power connector		USB-C® connector (Thunderbolt™ 4)
HDMI	HDMI™ connector		Audio connector
SD	SD card reader		USB-A connector (USB 5Gbps, Always On USB)
USB-C	USB-C connector (USB 10Gbps)		Security-lock slot

Statement on USB transfer rate

Depending on many factors such as the processing capability of the host and peripheral devices, file attributes, and other factors related to system configuration and operating environments, the actual transfer rate using the various USB connectors on this device will vary and will be slower than the data rate listed in the connector name or below for each corresponding device.

USB device	Data rate (Gbps)
Thunderbolt 3	40
Thunderbolt 4	40

Bottom

Have a quick glance at the bottom part of your computer.

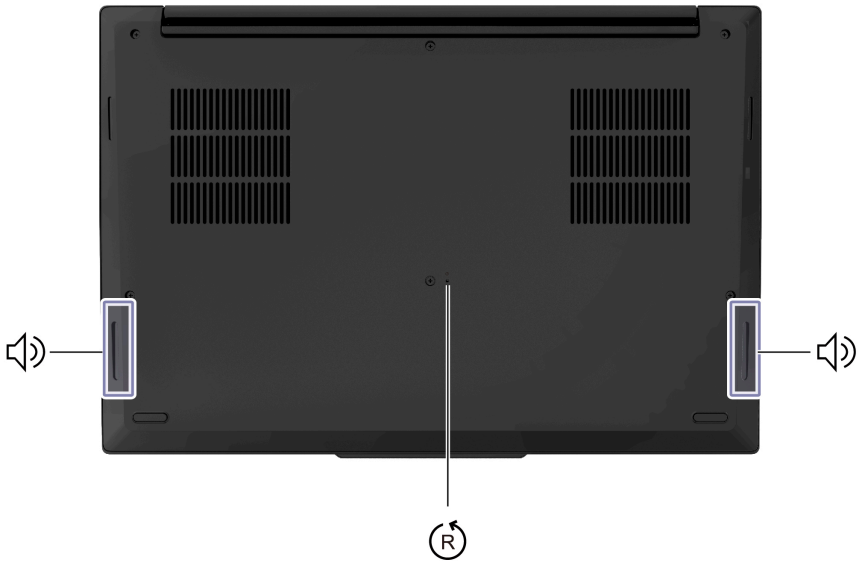

Item	Description	Item	Description
	Speaker		Emergency-reset hole

Emergency-reset hole

Emergency-reset hole can help you to recover computer when the computer stops responding and you cannot turn it off by pressing the power button. Do the following to reset your computer:

1. Disconnect your computer from ac power.
2. Insert a straightened paper clip into the hole to cut off power supply temporarily.
3. Connect your computer to ac power and then turn on your computer.

Note: If your computer is still no response, you can call Lenovo Customer Support Center to get further help.

CAUTION:
When the computer is operating, it should be placed on a hard and flat surface with its bottom area not in contact with user's bare skin. Under normal operating conditions, the temperature of the bottom surface will remain within an acceptable range as defined in *IEC 62368-1*, but such temperatures can still be high enough to cause discomfort or harm to the user if directly touched for over one minute at a time. As such, it is recommended that users avoid prolonged direct contact with the bottom of the computer.

USB connectors

Get to know more USB specifications.

Note: Depending on the model, some USB connectors might not be available on your computer.

Connector name	Description
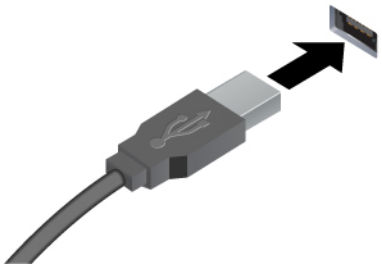 • USB-A connector (Hi-Speed USB) • USB-A connector (USB 5Gbps) • USB-A connector (USB 10Gbps)	Connect USB-compatible devices, such as a USB keyboard, USB mouse, USB storage device, or USB printer.
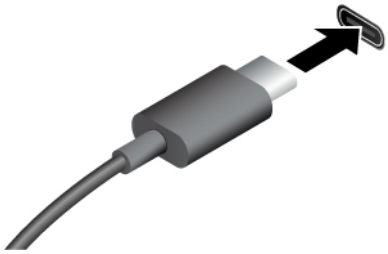 • USB-C connector (USB 5Gbps) • USB-C connector (USB 10Gbps) • USB-C connector (Thunderbolt 3) • USB-C connector (Thunderbolt 4) • USB-C connector (USB4 40Gbps) • USB-C connector (DP Alt mode DP 2.1)	• Charge USB-C compatible devices with the output voltage and current of 5 V and 3 A. • Connect to an external display: – USB-C to VGA: up to 1920 x 1200 pixels, 60 Hz – USB-C to DP: up to 5120 x 3200 pixels, 60 Hz • Connect to USB-C accessories to help expand your computer functionality. To purchase USB-C accessories, go to https://www.lenovo.com/accessories.

Chapter 2. Get started with your computer

Get started with your desktop

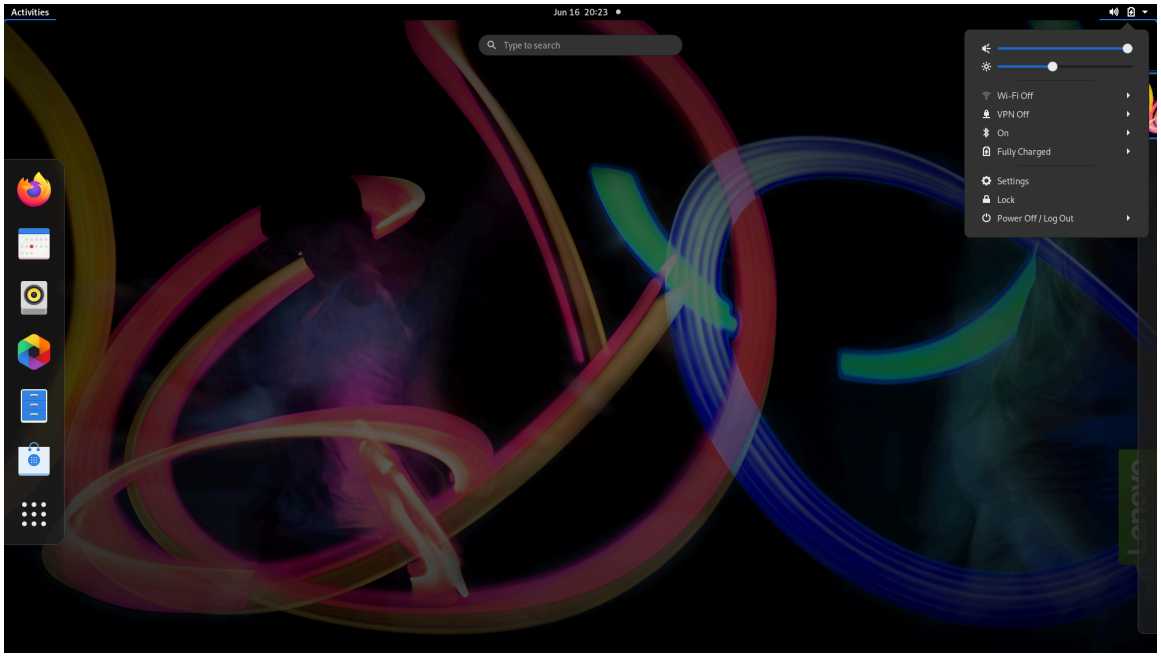

Launch an app

- Use the super key (with the Windows logo) or open the Activities menu on the top left and type in the name of the application you want to launch.
- Click the "show application" menu (For the Fedora operating system, you can see the menu after opening Activities menu) on the lower left and type in the name of the application you want to launch.

Launch settings

Select the system menu arrow on the top right and click on **Settings**.

Get support

Select the system menu arrow on the top right and click on **Settings**.

- For the Ubuntu operating system, see the Ubuntu documentation site at https://help.ubuntu.com/lts/ubuntu-help/index.html.
- For the Fedora operating system, see the Fedora project wiki at https://fedoraproject.org/wiki/Fedora_Project_Wiki.
- The Gnome desktop is installed by default and is designed to be simple and easy to use. Details on using Gnome are available by launching the Help application or online at https://help.gnome.org/users/.

Manage networks

Your computer helps you connect to the world through a wired network.

© Copyright Lenovo 2024, 2025

Connect to Wi-Fi networks

Step 1. Click the system menu arrow on the top right. A list of available wireless networks is displayed.

Step 2. Select a network available for connection. Provide required information, if needed.

Airplane mode

When the Airplane mode is enabled, all wireless features are disabled.

To enable or disable the Airplane mode:

Step 1. Use the system menu drop down (top right) and choose **Settings**.

Step 2. Click the Wi-Fi option.

Step 3. Turn on or turn off the **Airplane mode** switch.

Interact with your computer

Your computer provides you various ways to navigate the screen.

Use the camera

- Take pictures or record videos by using the **Cheese** application. The indicator next to the camera is on when the camera is in use.
- If you use other apps that support photographing, video chatting, and video conference, the camera starts automatically when you enable the camera-required feature from the app.

Note: IR function is currently limited in Linux. Make sure the regular camera mode is selected if you see gray lines.

Use the keyboard shortcuts

Keyboard shortcuts are keys or combinations of keys that provide a quick way to perform particular functions. They help you work more efficiently.

The following tables introduce the functions of keyboard shortcuts.

FnLock and function keys

Key / Key combination	Function description
Fn + FnLock	Switch between the special and standard functions of the function keys (F1–F12). Function keys provide two sets of functions: special function and standard function. Icons on the key denote the special function, such as 🔇 and 🔉−. Characters on the key denote the standard function, such as F1 and F2. LED indicator on Esc key indicates which function of the function keys is enabled: • When the indicator is off, the special function is enabled. • When the indicator is on, the standard function is enabled.
🔇	Mute / Unmute (Speakers).
🔉−	Decrease volume.
🔊+	Increase volume.
🎤	Enable / Disable the microphone.

Key / Key combination	Function description
☼−	Decrease screen brightness.
☼+	Increase screen brightness.
	Select and set up display devices.
PrtSc	Open Snipping Tool.
☆	Open bookmarks in your browser.

Other general keyboard shortcuts

Key / Key combination	Function description
Fn +	Open the context menu of the current active app.
Fn +	Adjust the keyboard backlight.
Fn + <	Go to beginning.
Fn + >	Go to end.
Fn + 4	Enter sleep mode.
Fn + B	Break operation.
Fn + K	Scroll contents.
Fn + P	Pause operation.
Fn + S	Send system request.

Use the TrackPoint pointing device

The TrackPoint pointing device enables you to perform all the functions of a traditional mouse, such as pointing, clicking, and scrolling.

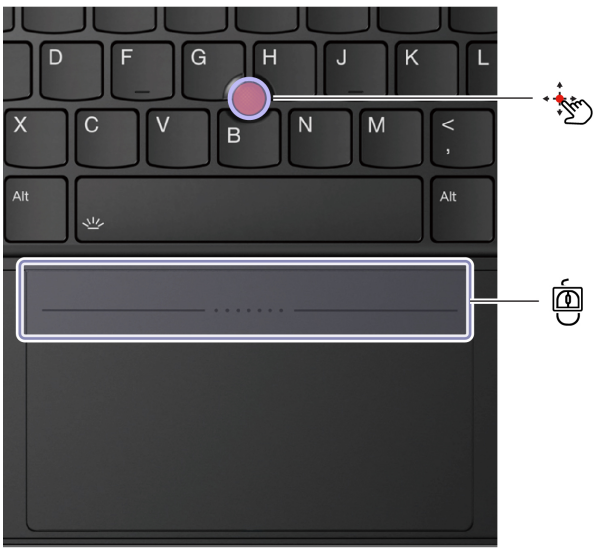

TrackPoint pointing stick

Use your finger to apply pressure to the pointing-stick nonslip cap (hereafter referred to as the red cap) in any direction parallel to the keyboard. The pointer on the screen moves accordingly. The higher the pressure applied, the faster the pointer moves.

TrackPoint Three Buttons

TrackPoint left button and TrackPoint right button correspond to the left and right buttons on a traditional mouse. Press and hold the TrackPoint center button while using your finger to applying pressure to the pointing stick in the vertical or horizontal direction. Then, you can scroll through the document, Web site, or apps.

Press Ctrl + TrackPoint center button + TrackPoint pointing stick at the same time to zoom in or zoom out.

Replace the pointing-stick nonslip cap

Note: Ensure that the new cap has grooves a.



Use the Haptic Touchpad

You can use the Haptic Touchpad to perform all the pointing, clicking, and scrolling functions of a traditional mouse. It is ideal for you to use for occasions with high portability requirements, for example, business trips.

- When TrackPoint Three Buttons are enabled



- When TrackPoint Three Buttons are disabled



Item	Description	Item	Description
	Left-click zone		Right-click zone

Use the touch gestures

Illustration	Description
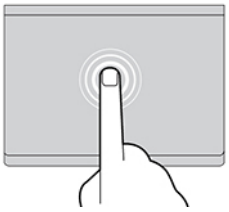	**Tap** Tap anywhere on the Trackpad with one finger to select or open an item.
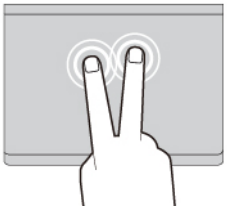	**Two-finger tap** Tap anywhere on the Trackpad with two fingers to display a shortcut menu.
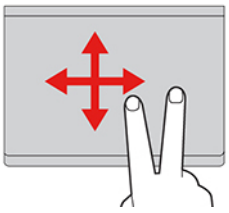	**Two-finger scroll** Put two fingers on the Trackpad and move them in the vertical or horizontal direction. This action enables you to scroll through the document, Web site, or apps.

Illustration	Description
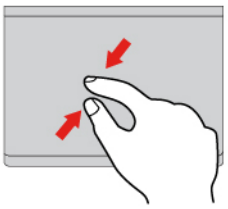	**Two-finger zoom out** Put two fingers on the Trackpad and move them closer together to zoom out.
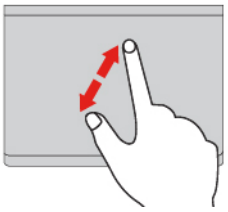	**Two-finger zoom in** Put two fingers on the Trackpad and move them farther apart to zoom in.

Notes:
- When using two or more fingers, ensure that you position your fingers slightly apart.
- Some gestures are not available if the last action was done from the TrackPoint pointing device.
- Some gestures are only available when you are using certain apps.
- If the Trackpad surface is stained with oil, turn off the computer first. Then, gently wipe the Trackpad surface with a soft and lint-free cloth moistened with lukewarm water or computer cleaner.

For more gestures, see the help information of the pointing device.

Use the multi-touch screen (for selected models)

If your computer display supports the multi-touch function, you can navigate the screen with simple touch gestures.

Note: Some gestures might not be available depending on the app you use.

Illustration	Description
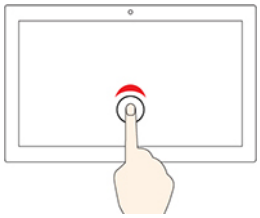	**Tap once** • From the **Start** menu: Open an app or item. • From the desktop: Select an app or item. • In an open app: Perform an action such as **Copy**, **Save**, and **Delete**, depending on the app.
	**Tap twice quickly** Open an app or item from the desktop.

Illustration	Description
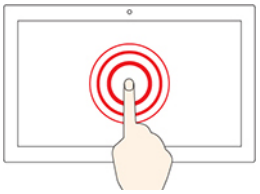	**Tap and hold** Open a shortcut menu.
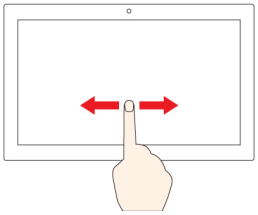	**Slide** Scroll through items, such as lists, pages, and photos.
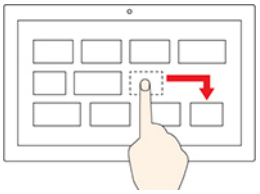	**Drag an item to the location you want** Move an object.
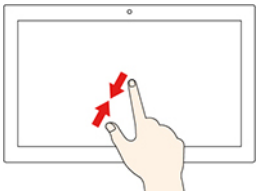	**Move two fingers closer together** Zoom out.
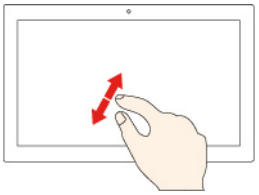	**Move two fingers farther apart** Zoom in.

Tips

- Turn off the computer before cleaning the multi-touch screen.
- Use a dry, soft, and lint-free cloth or a piece of absorbent cotton to remove fingerprints or dust from the multi-touch screen. Do not apply solvents to the cloth.
- The multi-touch screen is a glass panel covered with a plastic film. Do not apply pressure or place any metallic object on the screen, which might damage the touch panel or cause it to malfunction.
- Do not use fingernails, gloved fingers, or inanimate objects for input on the screen.
- Regularly calibrate the accuracy of the finger input to avoid a discrepancy.

Connect to an external display

Connect your computer to a projector or a monitor to give presentations or expand your workspace.

Connect to a wired display

Step 1. Connect the external display to an appropriate video connector on your computer.

Step 2. Connect the external display to an electrical outlet.

Step 3. Turn on the external display.

If your computer cannot detect the external display, right-click a blank area on the desktop, and then click **Display settings**.

Set the display mode

Press F7 or Fn + F7 and then select a display mode of your preference.

Change display settings

Step 1. Right-click a blank area on the desktop and select **Display settings**.

Step 2. Select the display that you want to configure.

Step 3. Change display settings of your preference.

You can change the settings for both the computer display and the external display. For example, you can define which one is the main display and which one is the secondary display. You also can change the resolution and orientation.

Note: If you set a higher resolution for the computer display than the external display, only part of the screen can be displayed on the external display.

Chapter 3. Explore your computer

Use the Intelligent Cooling feature

The Intelligent Cooling feature enables your computer to work in the following three modes:

- Power Saver mode: the quietest fan speed
- Balanced mode: balanced performance and fan speed
- Performance mode: the highest performance and normal fan speed

Your computer starts up in balanced mode by default, do the following to switch to the preferred mode:

- Press Fn+L to switch to power saver mode.
- Press Fn+M to switch to balanced mode.
- Press Fn+H to switch to performance mode.

Use the P-to-P 2.0 charging function

The USB-C connector on the computer features the Lenovo-unique P-to-P 2.0 charging function. When no ac power is available, this feature enables one computer to supply power to another computer through a USB-C to USB-C cable. When ac power is available for only one computer, this feature enables both computers to get charged by ac power.

Before using the function, ensure that:

- The selected connectors support the P-to-P 2.0 charging function and power delivery function.
- **Always On USB** and **Charge in Battery Mode** are enabled in UEFI BIOS of both computers, so that the function works even when the computers are off or in hibernation mode. To enable **Always On USB** and **Charge in Battery Mode**:
  1. Enter the UEFI BIOS menu. See “Enter the UEFI BIOS menu” on page 23.
  2. Click **Config → USB** to enable **Always On USB** and **Charge in Battery Mode**.

Step 1. Enter the UEFI BIOS menu. See “Enter the UEFI BIOS menu” on page 23.

Step 2. Click **Config → USB** to enable **Always On USB** and **Charge in Battery Mode**.

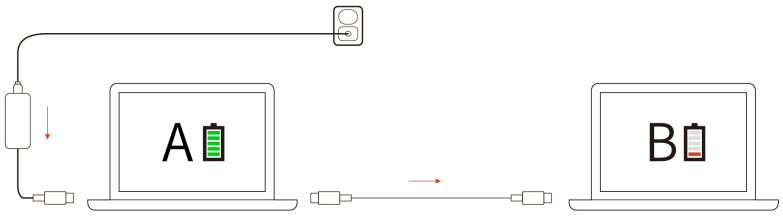

Note: The actual charging speed using the Lenovo-unique P-to-P 2.0 charging function varies depending on many factors, such as the remaining battery power of the computers, the wattage of the ac power adapter, and whether you are using the computers.

© Copyright Lenovo 2024, 2025

Set the power plan

For ENERGY STAR® compliant computers, the following power plan takes effect when your computers have been idle for a specified duration:

- Turn off the display: After 5 minutes
- Put the computer to sleep: After 20 minutes

Follow the instructions to reset the power plan to achieve the best balance between performance and power saving.

Step 1. Click on the battery symbol in the system menu drop down box and select **Power Settings**.

Step 2. Choose or customize a power plan of your preference.

Connect to a Bluetooth-enabled device

You can connect all types of Bluetooth-enabled devices to your computer, such as a keyboard, a mouse, a smartphone, or speakers. To ensure the connection is successful, place the devices 10 meters (33 feet), at most, from the computer.

Step 1. Turn on Bluetooth on the computer.

   a. Click the system menu drop down (top right) and choose **Settings**.

   b. Choose the Bluetooth menu and enable Bluetooth with the toggle button at the top.

Step 2. Any discoverable devices will be shown in the **Devices** list.

Step 3. Select a Bluetooth device, and then follow the on-screen instructions.

Your Bluetooth-enabled device and computer will automatically connect the next time if the two devices are in range of each other with Bluetooth turned on. You can use Bluetooth for data transfer or remote control and communication.

Enabling Nvidia proprietary drivers in Fedora (for selected models)

Your computer might come with an Nvidia card. The Nvidia proprietary drivers that will enable you to take advantage of performance benefits and new graphics functionality are not installed by default with Fedora.

Follow the instructions to enable the proprietary drivers.

Step 1. Launch the **Software** utility.

Step 2. From the top right selection box choose Software Repositories.

Step 3. Enable third party repositories.

Step 4. Enable **RPM Fusion for Fedora → Nonfree → Nvidia Driver** and close the Software Repositories window.

Step 5. Go to the updates tab and click on the curved arrow on the top left to refresh the software cache. Reboot the machine and launch the Software utility again.

Step 6. Select **Add-ons** on the bottom right and choose the **Hardware Drivers** tab.

Step 7. Select **NVIDIA Linux Graphics Driver**.

Step 8. Select **Install** and wait for the installation to complete. This can take a few minutes.

Step 9. Reboot and confirm Nvidia drivers are running using the **nvidia-settings** utility.

Chapter 4. Secure your computer and information

Lock the computer

Lock your computer to a desk, table, or other fixtures through a compatible security cable lock.

Note: The slot supports cable locks that conform to the Kensington NanoSaver® lock standards using Cleat™ locking technology. You are responsible for evaluating, selecting, and implementing the locking device and security feature. Lenovo is not responsible for the locking device and security feature. You can purchase the cable locks at https://smartfind.lenovo.com.

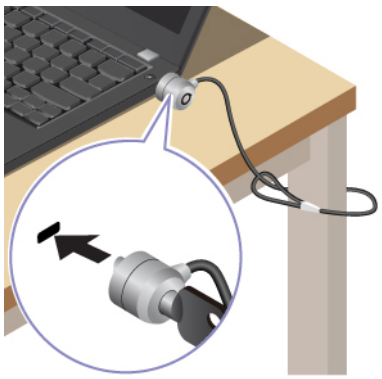

Use the fingerprint reader (for selected models)

If your computer comes with a fingerprint reader, you can use it to enroll your fingerprints. After enrollment, you can tap your finger on the fingerprint reader to log in to the system.

Enroll your fingerprints

Open the system menu and then click **Settings** → **Users** → **Fingerprint Login**. Then, follow the on-screen instructions to finish the enrollment.

During the enrollment, the fingerprints are associated with the user password automatically. It is recommended that you enroll more than one fingerprint in case of any injuries to your fingers.

Log in with your fingerprint

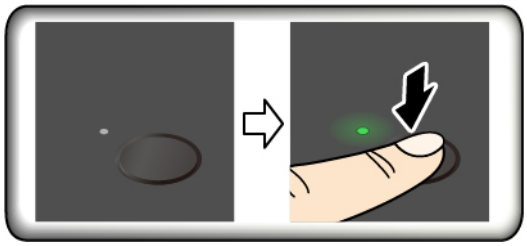

Maintain the fingerprint reader

To ensure that the fingerprint reader works correctly, do not:

- Scratch the surface of the reader with anything hard or sharp.
- Use or touch the reader with a wet, dirty, wrinkled, or injured finger.

© Copyright Lenovo 2024, 2025

Use passwords

This section introduces types of passwords in UEFI (Unified Extensible Firmware Interface) BIOS (Basic Input/Output System) and how to set, change, and remove a password.

Password types

You can set a power-on password, supervisor password, system management password, or NVMe password in UEFI BIOS to prevent unauthorized access to your computer.

However, you are not prompted to enter any UEFI BIOS password when your computer resumes from sleep mode.

Power-on password

If you set a power-on password, a window is displayed on the screen when you turn on the computer. Enter the correct password to use the computer.

Supervisor password

The supervisor password protects the system information stored in UEFI BIOS. When entering the UEFI BIOS menu, enter the correct supervisor password in the window prompted. You also can press Enter to skip the password prompt. However, you cannot change most of the system configuration options in UEFI BIOS.

If you have set both the supervisor password and power-on password, you can use the supervisor password to access your computer when you turn it on. The supervisor password overrides the power-on password.

NVMe passwords

The NVMe password prevents unauthorized access to the data on the storage drive. When an NVMe password is set, you are prompted to type a correct password each time you try to access the storage drive.

- **Single Password**

  When a Single NVMe password is set, the user must enter the user NVMe password to access files and applications on the storage drive.
- **Dual Password (User+Admin)**

  The admin NVMe password is set and used by a system administrator. It enables the administrator to access any storage drive in a system or any computer connected in the same network. The administrator can also assign a user NVMe password for each computer in the network. The user of the computer can change the user NVMe password as desired, but only the administrator can remove the user NVMe password.

When prompted to enter an NVMe password, press F1 to switch between the admin NVMe password and user NVMe password.

Notes: The NVMe password is not available in the following situations:

- A Trusted Computing Group (TCG) Opal-compliant storage drive and a TCG Opal management software program are installed in the computer, and the TCG Opal management software program is activated.
- An eDrive storage drive is installed in the computer preinstalled with the Windows operating system.

System management password

The system management password can also protect the system information stored in UEFI BIOS like a supervisor password, but it has lower authority by default. The system management password can be set

through the UEFI BIOS menu or through Windows Management Instrumentation (WMI) with the Lenovo client-management interface.

You can enable the system management password to have the same authority as the supervisor password to control security-related features. To customize the authority of the system management password through the UEFI BIOS menu:

Step 1. Restart the computer. When the logo screen is displayed, press F1 to enter the UEFI BIOS menu.

Step 2. Select **Security → Password → System Management Password Access Control**.

Step 3. Follow the on-screen instructions.

If you have set both the supervisor password and the system management password, the supervisor password overrides the system management password. If you have set both the system management password and the power-on password, the system management password overrides the power-on password.

Set, change, or remove a password

Follow the instructions to set, change or remove a password.

Before you start, print these instructions.

Step 1. Restart the computer. When the logo screen is displayed, press F1 to enter the UEFI BIOS menu.

Step 2. Select **Security → Password** by using the arrow keys.

Step 3. Select the password type. Then, follow the on-screen instructions to set, change, or remove a password.

You should record all your passwords and store them in a safe place. If you forget any of your passwords, any potential repair actions required are not covered under warranty.

What to do if you forget your power-on password

Follow the instructions to remove the power-on password if you forget your power-on password.

If you have set a supervisor password or a system management password and remember it:

Step 1. Restart the computer. When the logo screen is displayed, immediately press F1.

Step 2. Type the supervisor password or the system management password to enter the UEFI BIOS menu.

Step 3. Select **Security → Password → Power-On Password** by using the arrow keys.

Step 4. Type the current supervisor password or the system management password in the **Enter Current Password** field. Then, leave the **Enter New Password** field blank, and press Enter twice.

Step 5. In the Changes have been saved window, press Enter.

Step 6. Press F10 to save changes and exit the UEFI BIOS menu.

If you have not set a supervisor password or a system management password, contact a Lenovo-authorized service provider to have the power-on password removed.

What to do if you forget your system management password

Follow the instructions to remove the system management password if you forget your system management password.

If you have set a supervisor password and remember it:

Step 1. Restart the computer. When the logo screen is displayed, immediately press F1.

Step 2. Type the supervisor password to enter the UEFI BIOS menu.

Step 3. Select **Security → Password → System Management Password** by using the arrow keys.

Step 4. Type the current supervisor password in the **Enter Current Password** field. Then, leave the **Enter New Password** field blank, and press Enter twice.

Step 5. In the Changes have been saved window, press Enter.

Step 6. Press F10 to save changes and exit the UEFI BIOS menu.

If you have not set a supervisor password, contact a Lenovo-authorized service provider to have the system management password removed.

What to do if you forget your NVMe password

Follow the instructions to remove the NVMe password if you forget your NVMe password.

If you forget your NVMe password (Single password) or both user and admin NVMe passwords (Dual password), Lenovo cannot reset your passwords or recover data from the storage drive. You can contact a Lenovo-authorized service provider to have the storage drive replaced. A fee will be charged for parts and service. If the storage drive is a CRU (Customer Replaceable Unit), you can also contact Lenovo to purchase a new storage drive to replace the old one by yourself. To check whether the storage drive is a CRU and the relevant replacement procedure, see “CRU list” on page 27.

What to do if you forget your supervisor password

There is no service procedure to remove the password. You can contact a Lenovo-authorized service provider to have the system board replaced. A fee will be charged for parts and service.

Use Power Loss Protection function (for selected models)

For models shipped with an NVMe (Non-Volatile Memory express) M.2 solid-state drive, the M.2 solid-state drive features the Lenovo-unique PLP (Power Loss Protection) function to avoid data loss or damage. On very rare occasions, your computer is not responding and you might have to shut down your computer by pressing and holding the power button for about seven seconds. In this case, the PLP function enables key data of your computer to be saved timely. However, there is no guarantee that all data is saved in any situation. To check the type of your M.2 solid-state drive:

Step 1. Restart the computer. When the logo screen is displayed, press F10 to enter the Lenovo diagnostics window.

Step 2. On the TOOLS tab, select **SYSTEM INFORMATION → STORAGE** using the arrow keys.

Step 3. Locate the **Device Type** section to check the information.

USB-C Restricted Mode

USB-C Restricted Mode is a security feature that allows you to disable data transfer through USB-C connectors while the charge function of the USB-C connectors is kept. It helps prevent data from being copied from the computer to USB storage devices connected to the computer. By enabling this feature, you can use public USB charging stations, such as those found in cafes and hotel lobbies, without worrying about data leakage from the USB-C connector.

Notes:

- Before using this feature, ensure that the remaining battery power is not less than 5%. Otherwise, this feature can not be enabled.
- This feature can be enabled or disabled by key combinations only when the computer is turned on.

To enable or disable this feature, press Fn + U, and then press Fn + S.

After this feature is enabled, the LED indicator blinks briefly when a USB device is connected.

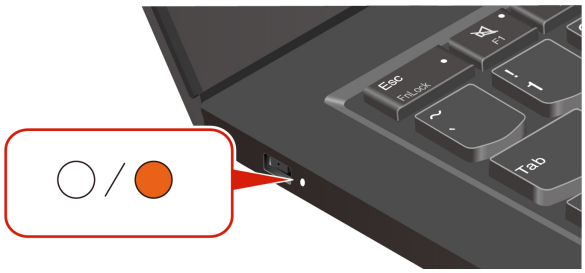

Chapter 5. Configure advanced settings

UEFI BIOS

This section introduces what is UEFI BIOS and the operations you can perform in UEFI BIOS.

What is UEFI BIOS

UEFI BIOS is the first program that the computer runs when the computer is turned on. UEFI BIOS initializes the hardware components and loads the operating system and other programs. Your computer comes with a setup program with which you can change UEFI BIOS settings.

Enter the UEFI BIOS menu

Restart the computer. When the logo screen is displayed, press F1 to enter the UEFI BIOS menu.

Note: If you have set the supervisor password, enter the correct password when prompted. You also can press Enter to skip the password prompt and enter the UEFI BIOS menu. However, you cannot change the system configurations that are protected by the supervisor password.

Navigate in the UEFI BIOS interface

Attention: The default configurations are already optimized for you in **boldface**. Improper change of the configurations might cause unexpected results.

You can navigate in the UEFI BIOS interface by pressing the following keys:

Key	Description
F1	Display the General Help screen.
F9	Restore to the default settings.
F10	Save your configuration and exit.
F5	Change to a lower value.
F6	Change to a higher value.
↑ ↓	Locate an item.
← →	Select a tab.
Esc	Exit the submenu and return to the parent menu.
Enter	Enter the selected tab or submenu.

Change the startup sequence

1. Restart the computer. When the logo screen is displayed, press F1.
2. Select **Startup → Boot**. Then, press Enter. The default device order list is displayed.

   Note: No bootable device is displayed if the computer cannot start from any devices or the operating system cannot be found.
3. Set the startup sequence as desired.
4. Press F10 to save the changes and exit.

© Copyright Lenovo 2024, 2025

To change the startup sequence temporarily:

1. Restart the computer. When the logo screen is displayed, press F12.
2. Select the device that you want the computer to start from and press Enter.

Detect memory retraining

Memory retraining is a process to initialize the memory module and run diagnostic tests for the memory module in your computer. The memory retraining might occur during POST if any of the following situations is detected:

- Memory module replacement
- Total Memory Encryption setting change in UEFI BIOS
- UEFI BIOS update (Memory Reference Code [MRC] change)

When memory retraining occurs, the screen might be blank. You might see the LED indicators on Esc, F1, and F4 blinking sequentially to indicate the progress. Do not press the power button to interrupt the process. Wait a few minutes until the logo screen is displayed.

Set the system date and time

1. Restart the computer. When the logo screen is displayed, press F1.
2. Select **Date/Time** and set the system date and time as desired.
3. Press F10 to save changes and exit.

Recover the UEFI BIOS

If the UEFI BIOS is corrupted or maliciously attacked, it can self-recover and restore your computer from the last uncorrupted and secure backup. This function protects your computer data.

During the UEFI BIOS self-recovery, the screen might be blank. You can check the progress based on blinking modes of the LED indicators on Esc, F1, and F4. For details, refer to the following table.

Note: Do not press the power button to interrupt the progress. Wait a few minutes until the logo screen is displayed.

Blinking modes	Self-recovery progress
LED indicator on Esc blinks	0% to 32%
LED indicators on Esc and F1 blink simultaneously	33% to 65%
LED indicators on Esc, F1 and F4 blink simultaneously	66% to 100%

Update UEFI BIOS

When you install a new program, device driver, or hardware component, you might need to update UEFI BIOS.

Download and install the latest UEFI BIOS update package by one of the following methods:

- Use the fwupdmgr or software utility to check LVFS for firmware updates.
- Go to https://pcsupport.lenovo.com and select the entry for your computer. Then, follow the on-screen instructions to download and install the latest UEFI BIOS update package.

Note: During the UEFI BIOS update process, Memory Reference Code (MRC) change might cause memory retraining. Memory retraining is a process to initialize the memory module and run diagnostic tests for the memory module in your computer. When memory retraining occurs, the screen might be blank. You might see the LED indicators on Esc, F1, and F4 blinking sequentially to indicate the progress. Do not press the power button to interrupt the process. Wait a few minutes until the logo screen is displayed.

To know more about UEFI BIOS, visit Knowledge Base of your computer at https://pcsupport.lenovo.com.

Chapter 6. CRU replacement

This section provides instructions on how to replace Customer Replaceable Units (CRUs).

CRU list

The following is a list of CRUs of your computer.

Self-service CRUs

- ac power adapter*
- Base cover assembly
- M.2 solid state drive
- M.2 solid-state drive bracket
- Power cord*
- Speaker assembly

Optional-service CRUs

- Built-in battery
- CAMM2 top cover
- CAMM2 memory module
- CAMM2 connector

* for selected models

Note: Replacement of any parts not listed above should be done by a qualified repair technician or by ensuring that you carefully follow all instructions provided by Lenovo. You can also find Lenovo-authorized repair facilities by going to https://support.lenovo.com/partnerlocator for more information.

Before you replace any CRU

Before replacing any CRU, ensure that you disable Fast Startup first and then disable the built-in battery.

Disable Fast Startup

Follow the instructions to disable Fast Startup.

Step 1. Go to **Control Panel** and view by Large icons or Small icons.
Step 2. Click **Power Options**, and then click **Choose what the power buttons do** on the left pane.
Step 3. Click **Change settings that are currently unavailable** at the top.
Step 4. If prompted by User Account Control (UAC), click **Yes**.
Step 5. Clear the **Turn on fast startup** check box, and then click **Save changes**.

Disable the built-in battery

Follow the instructions to disable the built-in battery.

Step 1. Restart your computer. When the logo screen is displayed, immediately press F1 to enter the UEFI BIOS menu.

© Copyright Lenovo 2024, 2025

Step 2. Select **Config → Power**. The **Power** submenu is displayed.

Step 3. Select **Disable Built-in Battery** and press Enter.

Step 4. Select **Yes** in the Setup Confirmation window.

The built-in battery is disabled and the computer turns off automatically.

Wait three to five minutes to let the computer cool.

Note: If your computer cannot enter the UEFI BIOS menu, you cannot disable the built-in battery. To ensure safety when you replace a CRU, it is recommended to do the following:

- For the built-in battery connected to the system board with cables: Disconnect the battery cables.
- For the CRUable built-in battery connected to the system board with comb connectors: Remove the battery. For the removal procedure, refer to the built-in battery replacement instructions in this documentation.
- For the non-CRUable built-in battery connected to the system board with comb connectors: Call Lenovo Customer Support Center for help.

To check whether the built-in battery on your computer is a CRU, see the CRU list in Chapter 6 “CRU replacement” on page 27.

Replace a CRU

Follow the instructions to replace a CRU.

Base cover assembly

Follow the instructions to replace the base cover assembly.

Before you start, read *Generic Safety and Compliance Notices* and print the following instructions.

Notes: Do not remove the base cover assembly in the following situations. Otherwise, there might be a risk of short circuits.

- When your computer has the removable battery installed
- When your computer is connected to ac power

For access, do the following:

1. Disable Fast Start up and the built-in battery. See “Before you replace any CRU” on page 27.
2. Turn off the computer and disconnect the computer from ac power and all connected cables.
3. Close the computer display and turn over the computer.

Step 1. Remove the base cover as shown below.

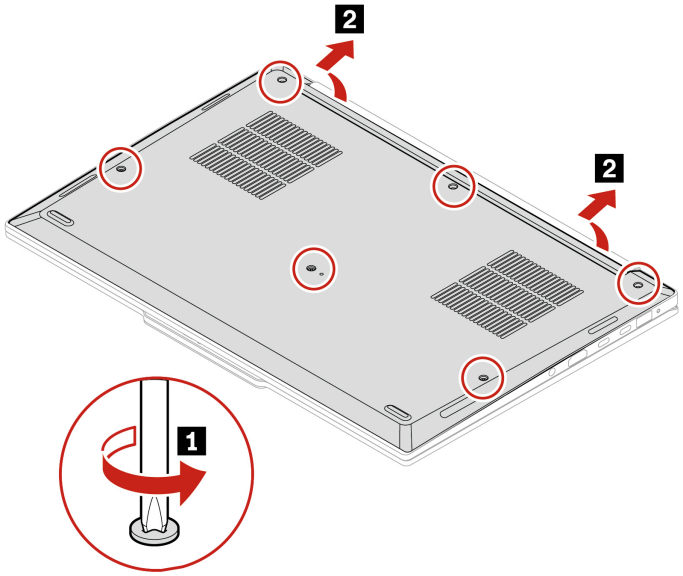

Step 2. Install the base cover as shown below.

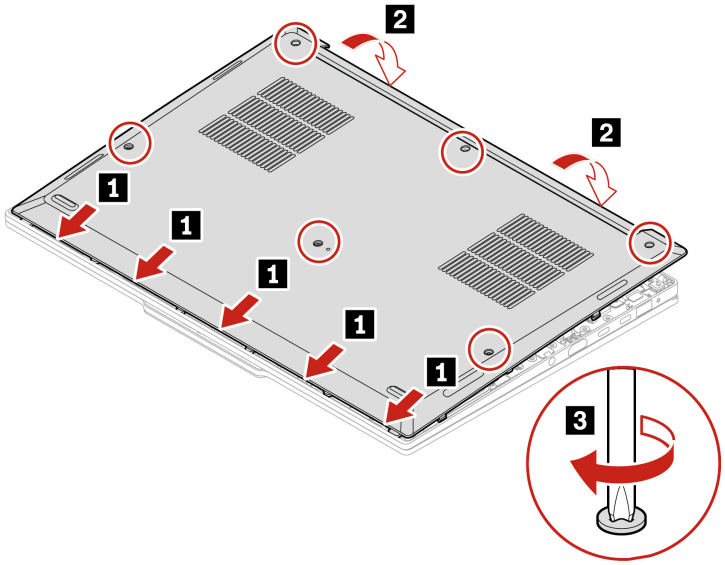

If the computer does not start up after you reinstall the base cover assembly, disconnect the ac power adapter and then reconnect it to the computer.

Built-in battery

Follow the instructions to replace the built-in battery.

Before you start, read *Generic Safety and Compliance Notices*.

CAUTION:

Use only the Lenovo-authorized battery specified for the computer. Any other battery could ignite or explode.

Batteries supplied by Lenovo for use with your product have been tested for compatibility and should only be replaced with approved parts. A battery other than the one specified by Lenovo, or a disassembled or modified battery may not be covered by warranty.

Battery abuse or mishandling can cause overheat, liquid leakage, or an explosion. To avoid possible injury:

- **Do not open, disassemble or service any battery unless you are competent to do so and ensure that you carefully follow all instructions provided by Lenovo.**
- **Do not crush or puncture the battery.**
- **Do not short-circuit the battery, or expose it to water or other liquids.**
- **Keep the battery away from children.**
- **Keep the battery away from fire.**
- **Stop using the battery if it is damaged, or if you notice any discharge or the buildup of foreign materials on the battery leads.**
- **Store the rechargeable batteries or products containing the rechargeable batteries at room temperature, charged to approximately 30 to 50% of capacity. We recommend that the batteries be charged about once per year to prevent overdischarge.**
- **Do not put the battery in trash that is disposed of in landfills. When disposing of the battery, comply with local ordinances or regulations.**
- **If the battery is incorrectly replaced, there is danger of an explosion. The battery contains a small amount of harmful substances.**

Lenovo recommends you use a qualified repair technician or ensure that you carefully follow all instructions provided by Lenovo. The Lenovo-authorized repair facilities or technicians recycle Lenovo batteries according to local laws and regulations. Please do not dispose of your battery with your household waste. For recycling information go to https://www.lenovo.com/recycling.

Attention: Lenovo has no responsibility for the performance or safety of unauthorized batteries, and provides no warranties for failures or damage arising out of their use.

The Vantage app provides an automatic battery diagnostic test that determines if the built-in battery is defective. A built-in battery should not be replaced unless this diagnostic test shows that the battery is defective. The only exception to this is if the built-in battery is physically damaged or a customer is reporting a possible safety issue.

If the Vantage app is not installed on the computer, the customer should download and install the program to diagnose the built-in battery, before replacing a non-physically damaged built-in battery. Note that the replacement of a physically damaged built-in battery is not covered by the warranty.

For access, do the following:

1. Disable Fast Start up and the built-in battery. See “Before you replace any CRU” on page 27.
2. Turn off the computer and disconnect the computer from ac power and all connected cables.
3. Close the computer display and turn over the computer.
4. Remove the base cover assembly. See “Base cover assembly” on page 28.

You can scan the QR code on the battery to view the battery replacement video.

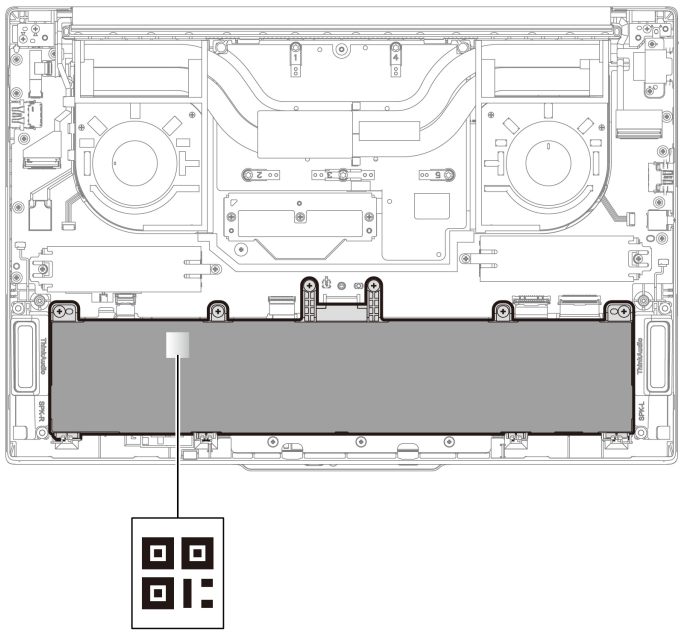

Step 1. Remove the built-in battery as shown below.

a. Loosen the six captive screws.

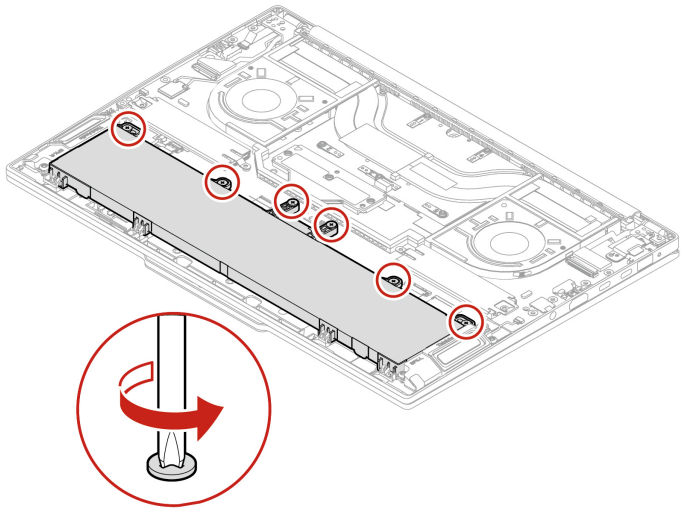

b. Remove the battery as shown below.

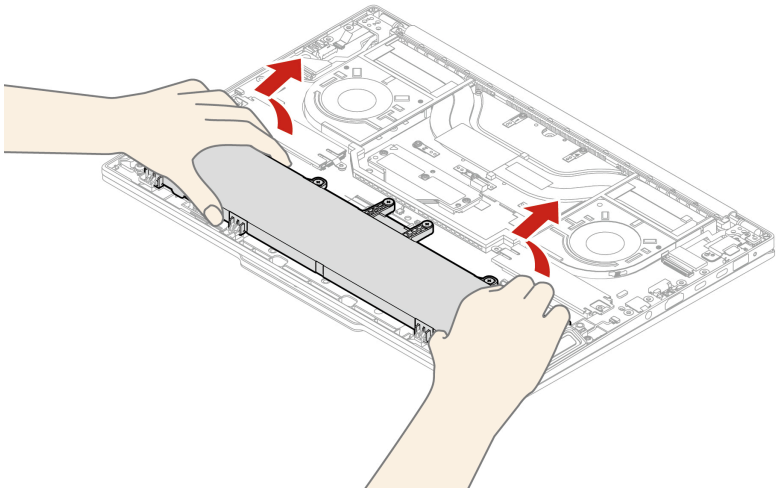

Step 2. Before installing the built-in battery, thoroughly check the battery compartment and ensure that there are no foreign or sharp objects that could cause damage to the battery.

Step 3. Install the built-in battery in reverse order.

When installing:

- Ensure that the connector is attached firmly.
- Ensure that the base cover assembly is secured in place. Otherwise, the battery connection might fail.

CAMM2 top cover

Follow the instructions to replace the CAMM2 top cover.

Before you start, read *Generic Safety and Compliance Notices* and print the following instructions.

For access, do the following:

1. Disable Fast Start up and the built-in battery. See “Before you replace any CRU” on page 27.
2. Turn off the computer and disconnect the computer from ac power and all connected cables.
3. Close the computer display and turn over the computer.
4. Remove the base cover assembly. See “Base cover assembly” on page 28.

Part location

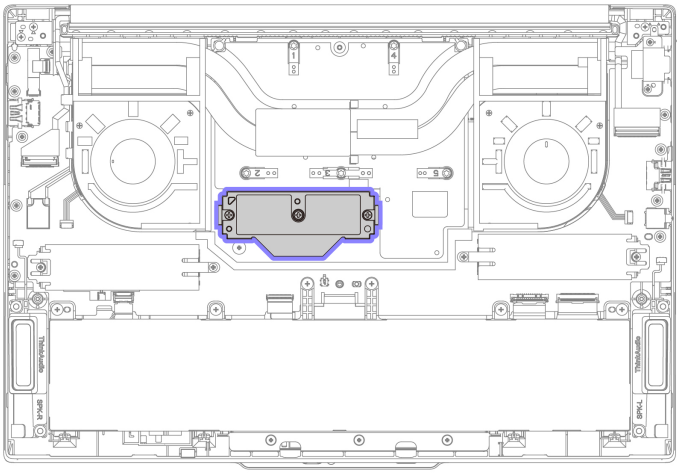

You can scan the QR code on the top cover to view the replacement video.

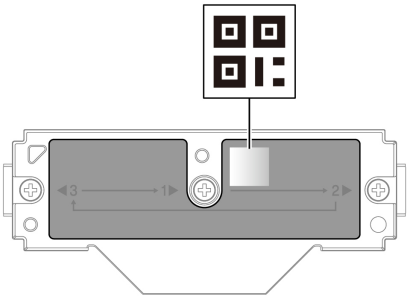

Step 1. Remove the top cover as shown below. Ensure you loosen screws in alphabetical order.

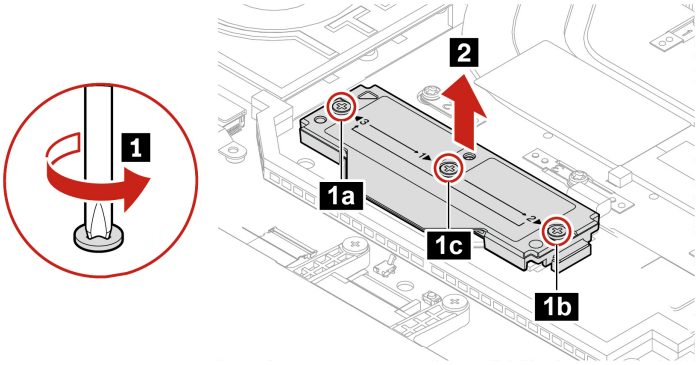

Note: When removing the top cover, ensure you lift it vertically as shown below.

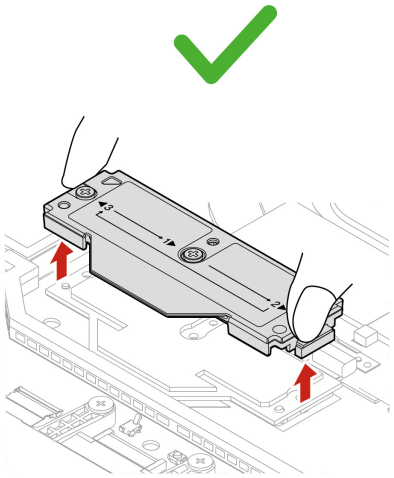

Step 2. Install the top cover as shown below.

Note: Before installing, ensure the memory module compartment is free of dust or contaminants.

a. Place the top cover on the CAMM2 memory module.

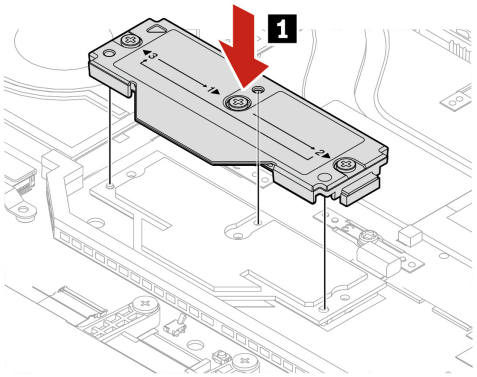

b. Tighten the three captive screws twice in the order as shown below. To prevent screws from loosing, ensure you tighten screws twice.

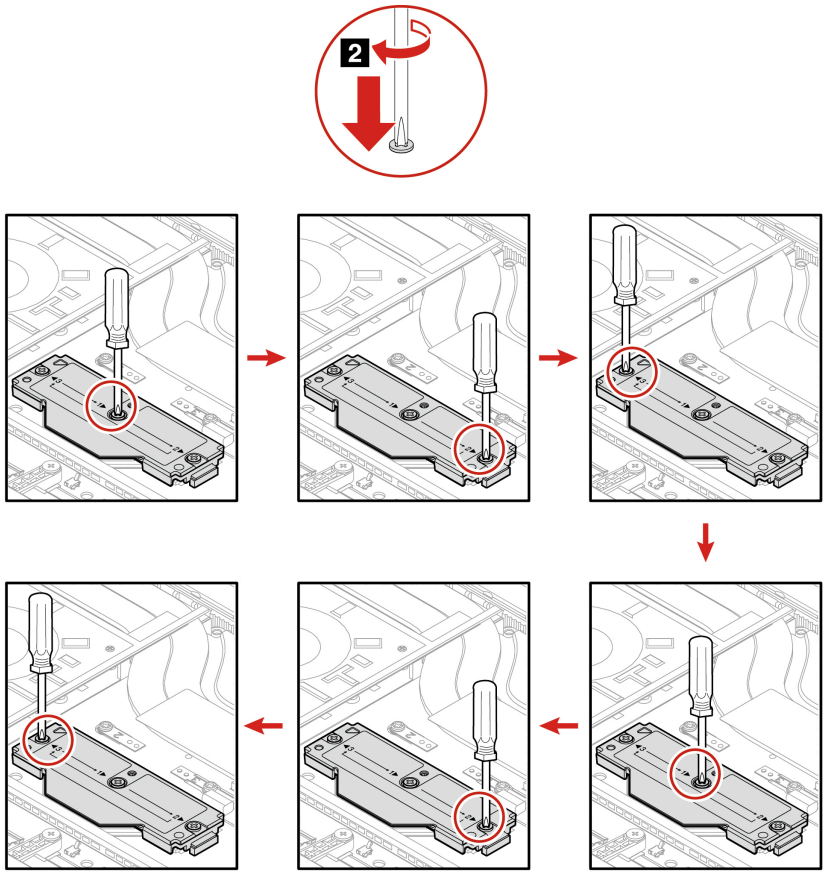

Notes: When tightening the screws:

- Use the correct type of Phillips-head screwdriver (#PH1).
- Press down the screwdriver with your palm to prevent the screwdriver from coming off. Otherwise, it might cause screw stripping.

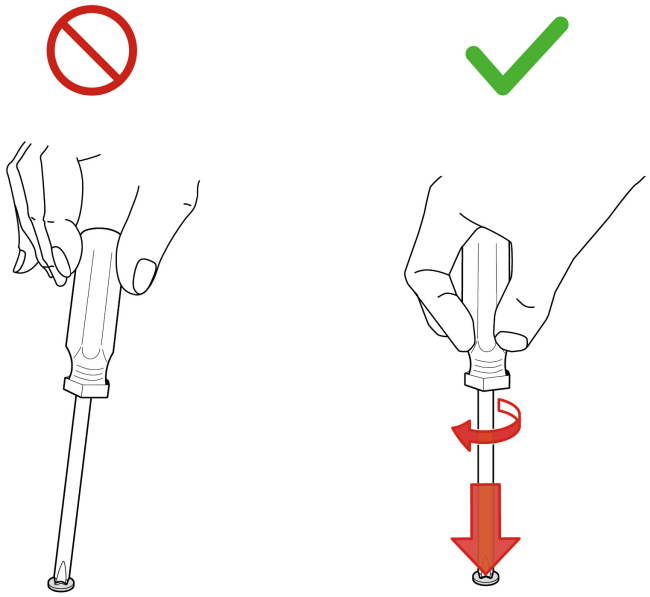

Troubleshooting

- Memory module replacement might cause memory retraining. For details, see “Detect memory retraining” on page 24.
- If the computer does not start up after replacement, check whether the three captive screws of the top cover are tightened firmly. If not, tighten screws firmly. Boot failure might not occur immediately after the replacement if screws are not tightened correctly.

CAMM2 memory module

Follow the instructions to replace the CAMM2 memory module.

Before you start, read *Generic Safety and Compliance Notices* and print the following instructions.

Attention: Do not touch the contact area of the memory module. Touch only the edge of the memory module.

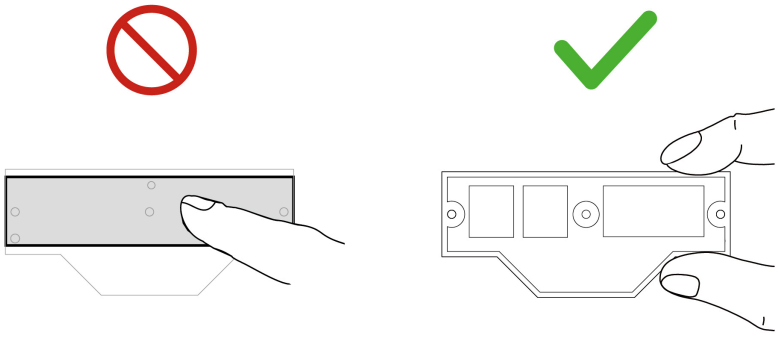

For access, do the following:

1. Disable Fast Start up and the built-in battery. See “Before you replace any CRU” on page 27.
2. Turn off the computer and disconnect the computer from ac power and all connected cables.
3. Close the computer display and turn over the computer.
4. Remove the base cover assembly. See “Base cover assembly” on page 28.
5. Remove the CAMM2 top cover. See “CAMM2 top cover” on page 32.

Part location

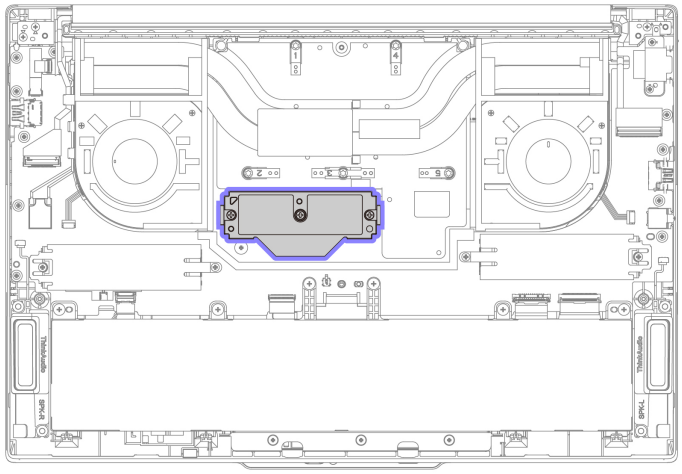

Step 1. Remove the memory module as shown below.

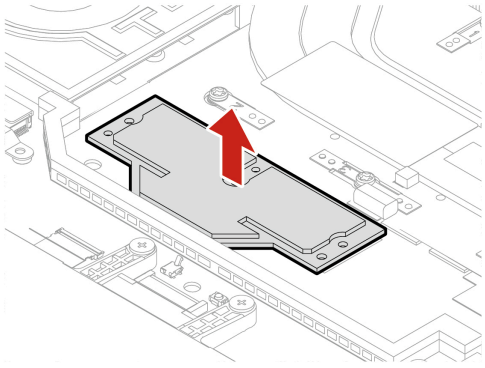

Step 2. Install the memory module as shown below.

Note: Before installing, ensure the memory module compartment is free of dust or contaminants.

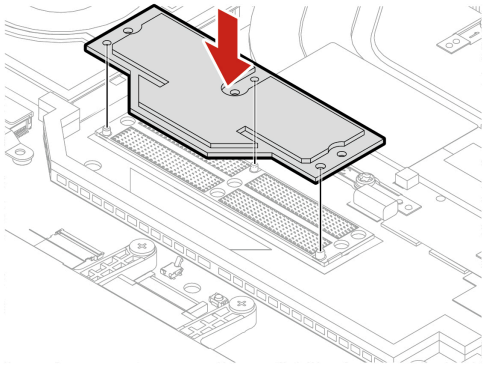

Troubleshooting

- Memory module replacement might cause memory retraining. For details, see “Detect memory retraining” on page 24.
- If the computer does not start up after replacement, check whether the three captive screws of the top cover are tightened firmly. If not, tighten screws firmly. Boot failure might not occur immediately after the replacement if screws are not tightened correctly.

CAMM2 connector

Follow the instructions to replace the CAMM2 memory module.

Before you start, read *Generic Safety and Compliance Notices* and print the following instructions.

Attention:

- Do not touch the pin area of the connector.
- Do not touch the touch pad area of the system board.

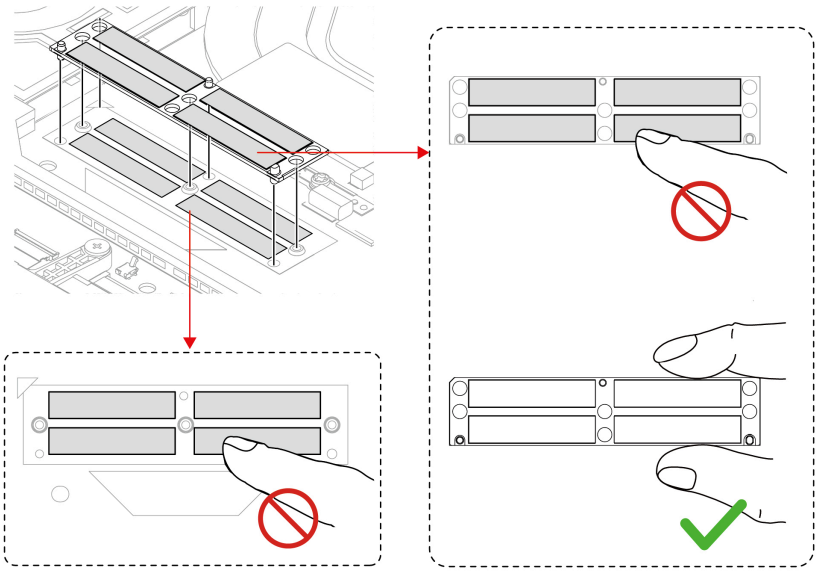

For access, do the following:

1. Disable Fast Start up and the built-in battery. See “Before you replace any CRU” on page 27.

2. Turn off the computer and disconnect the computer from ac power and all connected cables.
3. Close the computer display and turn over the computer.
4. Remove the base cover assembly. See “Base cover assembly” on page 28.
5. Remove the CAMM2 top cover. See “CAMM2 top cover” on page 32.
6. Remove the CAMM2 memory module. See “CAMM2 memory module” on page 36.

Part location

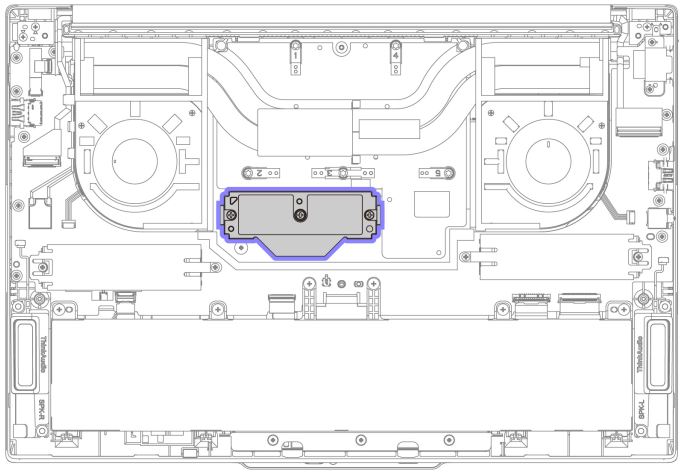

Step 1. Remove the connector as shown below.

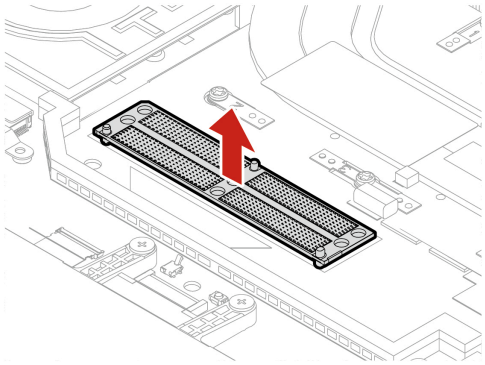

Step 2. Install the connector as shown below.

Notes:

- Before installing, ensure the memory module compartment is free of dust or contaminants.
- The connector has direction. Ensure that the cut-off corner is aligned with the marking on the system board.

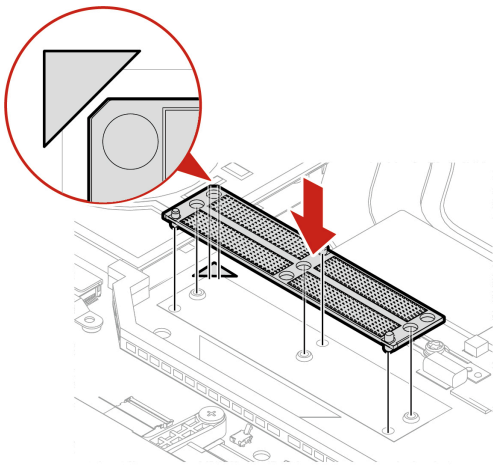

Troubleshooting

- Memory module replacement might cause memory retraining. For details, see “Detect memory retraining” on page 24.
- If the computer does not start up after replacement, check whether the three captive screws of the top cover are tightened firmly. If not, tighten screws firmly. Boot failure might not occur immediately after the replacement if screws are not tightened correctly.

M.2 solid-state-drive and M.2 solid-state drive bracket

Follow the instructions to replace the M.2 solid-state-drive and M.2 solid-state drive bracket.

Before you start, read *Generic Safety and Compliance Notices* and print the following instructions.

Attention: The M.2 solid-state drive is sensitive. Inappropriate handling might cause damage and permanent loss of data.

When handling the M.2 solid-state drive, observe the following guidelines:

- Replace the M.2 solid-state drive only for repair. The M.2 solid-state drive is not designed for frequent changes or replacement.
- Before replacing the M.2 solid-state drive, make a backup copy of all the data that you want to keep.
- Do not apply pressure to the M.2 solid-state drive.
- Do not touch the contact edge or circuit board of the M.2 solid-state drive. Otherwise, the M.2 solid-state drive might get damaged.
- Do not subject the M.2 solid-state drive to physical shocks or vibration. Put the M.2 solid-state drive on a soft material, such as cloth, to absorb physical shocks.

Depending on the model, your computer might have two M.2-solid-state-drive slots. When you configure the M.2-solid-state-drive slot in the UEFI BIOS menu, ensure that you select the correct menu item.

- Slot a: **NVMe0**
- Slot b: **NVMe1**

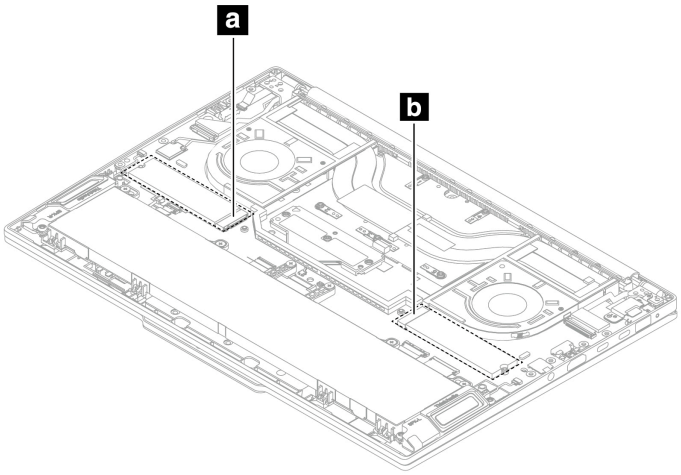

Special notices for M.2 solid-state-drive thermal pad

Before you replace a M.2 solid-state drive, observe the following tips to ensure you use the proper thermal pad:

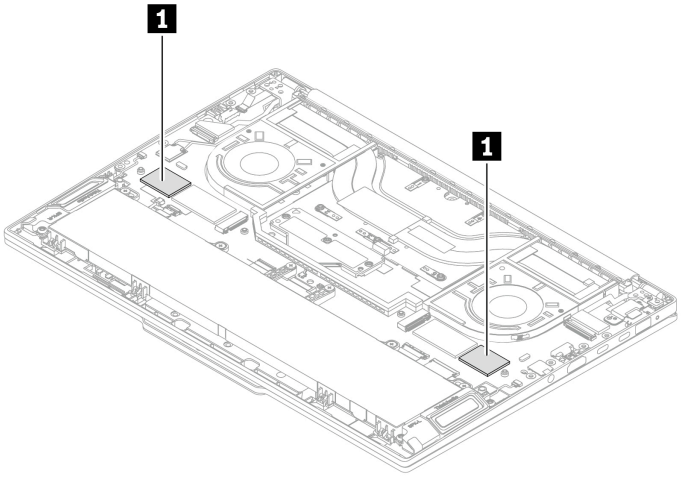

- To replace a single-sided M.2 solid-state drive with a dual-sided M.2 solid-state drive, ensure that you replace the thick thermal pad (thickness: 2.25 mm) with a thin thermal pad (thickness: 0.8 mm) in section 1 (the section far from the M.2 solid-state drive slot).
- To replace a dual-sided M.2 solid-state drive with a single-sided M.2 solid-state drive, ensure that you replace the thin thermal pad (thickness: 0.8 mm) with a thick thermal pad (thickness: 2.25 mm) in section 1 (the section far from the M.2 solid-state drive slot).
- For dual-sided M.2 solid-state drive, ensure that you use a thin thermal pad (thickness: 0.8 mm) in section 1.

- For single-sided M.2 solid-state drive, ensure that you use a thick thermal pad (thickness: 2.25 mm) in section 1.

For access, do the following:

1. Disable Fast Start up and the built-in battery. See “Before you replace any CRU” on page 27.
2. Turn off the computer and disconnect the computer from ac power and all connected cables.
3. Close the computer display and turn over the computer.
4. Remove the base cover assembly. See “Base cover assembly” on page 28.

Note: For Lenovo supported M.2 solid-state drive Gen 4, only 4 TB models are dual-sided. Other models are single-sided.

Step 1. Remove the M.2 solid-state-drive and M.2 solid-state drive bracket as shown below.

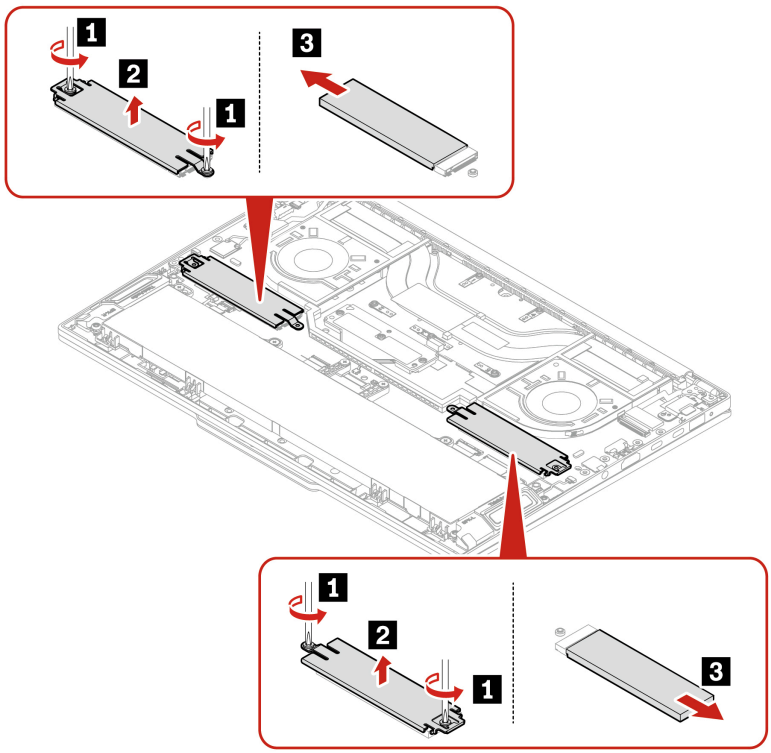

Step 2. Install the M.2 solid-state-drive and M.2 solid-state drive bracket in reverse order.

Speaker assembly

Follow the instructions to replace the speaker assembly.

Before you start, read *Generic Safety and Compliance Notices* and print the following instructions.

For access, do the following:

1. Disable Fast Start up and the built-in battery. See “Before you replace any CRU” on page 27.
2. Turn off the computer and disconnect the computer from ac power and all connected cables.
3. Close the computer display and turn over the computer.

4. Remove the base cover assembly. See “Base cover assembly” on page 28.

Step 1. Remove the speaker assembly as shown below.

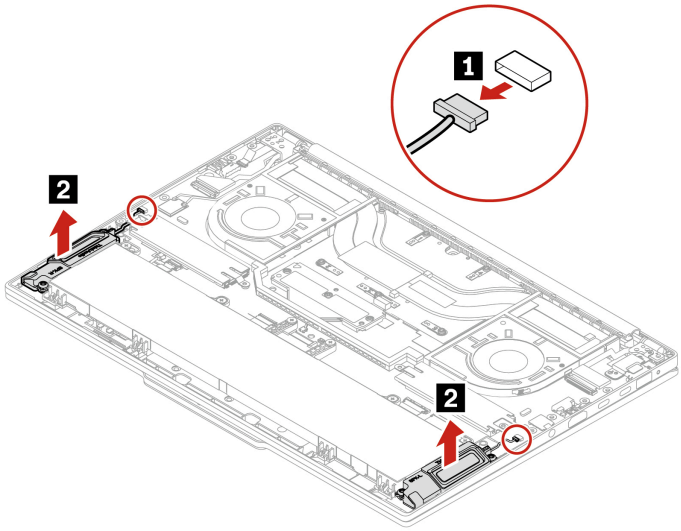

Step 2. Install the speaker assembly in reverse order.

Chapter 7. Help and support

Frequently asked questions

Question	Solution
How do I access **Settings**?	Open the system menu drop down (top right) and click **Settings**.
How do I turn off my computer?	From the system menu (top right) click ⏻, and then click **Power Off**.
What do I do if my computer stops responding.	1. Press and hold the power button until the computer turns off. Then, restart the computer. 2. If step 1 does not work: • For models with an emergency reset hole: Insert a straightened paper clip into the emergency reset hole to cut off power supply temporarily. Then, restart the computer with ac power connected. • For models without an emergency reset hole: – For models with the removable battery, remove the removable battery and disconnect all power sources. Then, reconnect to ac power and restart the computer. – For models with the built-in battery, disconnect all power sources. Press and hold the power button for about seven seconds. Then, reconnect to ac power and restart the computer.
What do I do if I spill liquid on the computer?	1. Carefully unplug the ac power adapter and turn off the computer immediately. The more quickly you stop the current from passing through the computer the more likely you will reduce damage from short circuits. **Attention:** Although you might lose some data or work by turning off the computer immediately, leaving the computer on might make your computer unusable. 2. Do not try to drain out the liquid by turning over the computer. If your computer has keyboard drainage holes on the bottom, the liquid will be drained out through the holes. 3. Wait until you are certain that all the liquid is dry before turning on your computer.
How do I enter the UEFI BIOS menu?	Restart the computer. When the logo screen is displayed, press F1 to enter the UEFI BIOS menu.
How do I disable my Haptic Touchpad?	1. Open the system menu, and then click **Settings → Mouse & Touchpad**. 2. In the Touchpad section, turn off the **Touchpad** control.
Where can I get the latest device drivers and UEFI BIOS?	Use the Software application to check for updates. It should notify when new firmware is available on LVFS (https://fwupd.org/).

© Copyright Lenovo 2024, 2025

Error messages

If you see a message that is not included in the following table, record the error message first, then shut down the computer and call Lenovo for help. See “Lenovo Customer Support Center” on page 49.

Message	Solution
0190: Critical low-battery error	The computer turned off because the battery power is low. Connect the ac power adapter to the computer and charge the batteries.
0191: System Security - Invalid remote change requested	The system configuration change has failed. Confirm the operation and try again.
0199: System Security - Security password retry count exceeded.	This message is displayed when you enter a wrong supervisor password more than three times. Confirm the supervisor password and try again.
0271: Check Date and Time settings.	The date or the time is not set in the computer. Enter the UEFI BIOS menu and set the date and time.
210x/211x: Detection/Read error on HDDx/SSDx	The storage drive is not working. Reinstall the storage drive. If the problem still exists, replace the storage drive.
Error: The non-volatile system UEFI variable storage is nearly full.	**Note:** This error indicates that the operating system or programs cannot create, modify, or delete data in the non-volatile system UEFI variable storage due to insufficient storage space after POST. The non-volatile system UEFI variable storage is used by the UEFI BIOS and by the operating system or programs. This error occurs when the operating system or programs store large amounts of data in the variable storage. All data needed for POST, such as UEFI BIOS setup settings, chipset, or platform configuration data, are stored in a separate UEFI variable storage. Press F1 after the error message is displayed to enter the UEFI BIOS menu. A dialog asks for confirmation to clean up the storage. If you select “Yes”, all data that were created by the operating system or programs will be deleted except global variables defined by the Unified Extensible Firmware Interface Specification. If you select “No”, all data will be kept, but the operating system or programs will not be able to create, modify, or delete data in the storage. If this error happens at a service center, Lenovo authorized service personnel will clean up the non-volatile system UEFI variable storage using the preceding solution.
Fan error. Press ESC to startup with limited performance	The thermal fan might not work correctly. After the error message is displayed, press ESC within five seconds to start up the computer with limited performance. Otherwise, the computer will shut down immediately. If the problem still exists when you starts up next time, have your computer serviced.

Self-help resources

Use the following self-help resources to learn more about the computer and troubleshoot problems.

Access product documentation

- *Safety and Warranty Guide*
- *Setup Guide*
- This *User Guide*
- *Regulatory Notice*

Visit the Lenovo support Web site

https://pcsupport.lenovo.com

- Drivers and software
- Diagnostic solutions
- Product and service warranty
- Product and parts details
- Knowledge base and frequently asked questions

Access the Lenovo Limited Warranty

This product is covered by the terms of the Lenovo Limited Warranty (LLW), version L505-0010-02 08/2011. You can view the LLW in a number of languages from the following Web site. Read the Lenovo Limited Warranty at:

https://www.lenovo.com/warranty/llw_02

The LLW also is preinstalled on the computer. To access the LLW, go to /opt/Lenovo

If you cannot view the LLW either from the Web site or from your computer, contact your local Lenovo office or reseller to obtain a printed version of the LLW.

Access Linux distributions

Linux is an open-source operating system, and popular Linux distributions include Ubuntu and Fedora.

To learn more about the Ubuntu operating system, go to:

https://www.ubuntu.com

To learn more about the Fedora operating system, go to:

https://getfedora.org/

Get support information

If you need help, service, technical assistance, or more information about the Linux operating system or other applications, contact the provider of the Linux operating system or the provider of the application. If you need the service and support for hardware components shipped with your computer, contact Lenovo.

To access the latest *User Guide* and *Safety and Warranty Guide*, go to:

https://pcsupport.lenovo.com

Access open-source information

This device includes software made publicly available by Lenovo, including software licensed under the General Public License and/or the Lesser General Public License (the open source software).

You may obtain a copy of the corresponding source code for any such open source software licensed under the General Public License and/or the Lesser General Public License (or any other license requiring us to make a written offer to provide corresponding source code to you) from Lenovo for a period of three years without charge except for the cost of media, shipping, and handling, upon written request to Lenovo. This offer is valid to anyone in receipt of this Device.

You may send your request in writing to the address below accompanied by a check or money order for $15 to:

Lenovo Legal Department
Attn: Open Source Team / Source Code Requests
8001 Development Dr.
Morrisville, NC 27560

Please include the version of the OS and the version of the Linux Kernel pre-shipped on this Device as part of your request. Be sure to provide a return address.

The open source software is distributed in hope it will be useful, but WITHOUT ANY WARRANTY; without even the implied warranty of MERCHANTABILITY or FITNESS FOR A PARTICULAR PURPOSE. See for example the GNU General Public License and/or the Lesser General Public License for more information.

To view additional information regarding licenses, acknowledgments and required copyright notices for the open source software shipped on your Device, go to `/usr/share/licences/*`.

Call Lenovo

If you have tried to correct the problem yourself and still need help, you can call Lenovo Customer Support Center.

Before you contact Lenovo

Prepare the needed information before you contact Lenovo.

1. Record the problem symptoms and details:
   - What is the problem? Is it continuous or intermittent?
   - Any error message or error code?
   - What operating system are you using? Which version?
   - Which software applications were running at the time of the problem?
   - Can the problem be reproduced? If so, how?
2. Record the system information:
   - Product name.
   - Machine type and serial number (shown as below illustration)

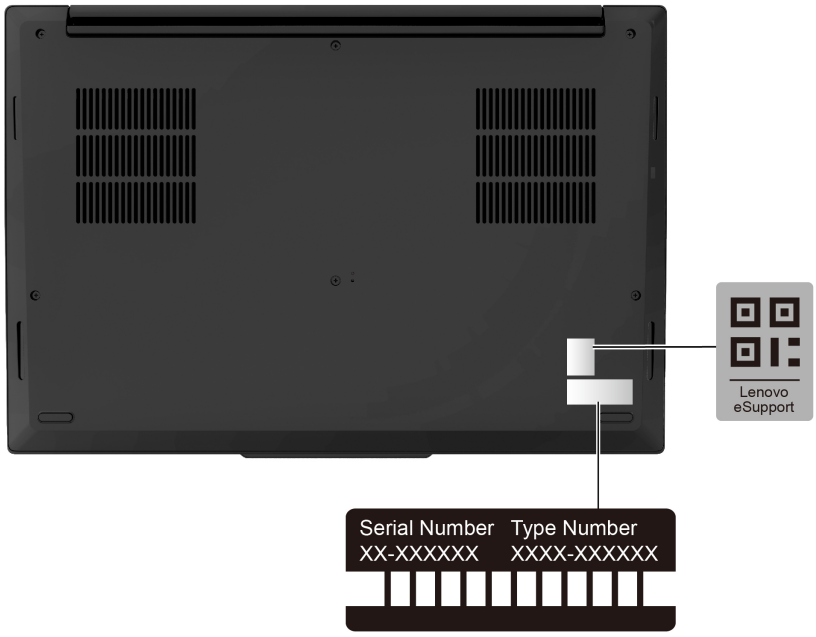

Lenovo Customer Support Center

During the warranty period, you can call Lenovo Customer Support Center for help.

Telephone numbers

For a list of the Lenovo Support phone numbers for your country or region, go to https://pcsupport.lenovo.com/supportphonelist for the latest phone numbers.

Note: Phone numbers are subject to change without notice. If the number for your country or region is not provided, contact your Lenovo reseller or Lenovo marketing representative.

Services available during the warranty period

- Problem determination - Trained personnel are available to assist you with determining if you have a hardware problem and deciding what action is necessary to fix the problem.
- Lenovo hardware repair - If the problem is determined to be caused by Lenovo hardware under warranty, trained service personnel are available to provide the applicable level of service.
- Engineering change management - Occasionally, there might be changes that are required after a product has been sold. Lenovo or your reseller, if authorized by Lenovo, will make selected Engineering Changes (ECs) that apply to your hardware available.

Services not covered

- Replacement or use of parts not manufactured for or by Lenovo or nonwarranted parts
- Identification of software problem sources
- Configuration of UEFI BIOS as part of an installation or upgrade
- Changes, modifications, or upgrades to device drivers
- Installation and maintenance of network operating systems (NOS)
- Installation and maintenance of programs

For the terms and conditions of the Lenovo Limited Warranty that apply to your Lenovo hardware product, go to:

- https://www.lenovo.com/warranty/llw_02
- https://pcsupport.lenovo.com/warrantylookup

Purchase additional services

During and after the warranty period, you can purchase additional services from Lenovo at https://pcsupport.lenovo.com/warrantyupgrade.

Service availability and service name might vary by country or region.

Appendix A. Compliance information

For compliance information, refer to *Regulatory Notice* at https://pcsupport.lenovo.com and *Generic Safety and Compliance Notices* at https://pcsupport.lenovo.com/docs/generic_notices.

Certification-related information

This section provides certification-related information, such as product name and machine type.

Table 1. Product information

Product name	Compliance ID	Machine type(s)
ThinkPad P1 Gen 7	• TP00158A • TP00158A0[1] • TP00158A1[1]	21KV and 21KW

[1] for India only

Further compliance information related to your product is available at https://www.lenovo.com/compliance.

Table 2. Korean Minimum Energy Performance Standard (MEPS) value

Energy efficiency labeling	Energy efficiency information
Computer type	C
Annual power consumption (kWh)	10
Power consumption in sleep mode (W)	1.2
Power consumption in off mode (W)	0.4

Locate the UltraConnect wireless antennas

Your computer has an UltraConnect™ wireless antenna system. You can enable wireless communication wherever you are.

© Copyright Lenovo 2024, 2025

The following illustration shows the antenna locations on your computer:



1 Wireless LAN antenna (auxiliary)
2 Wireless LAN antenna (main)

Operating environment

Maximum altitude (without pressurization)

3048 m (10 000 ft)

Temperature

- Operating: 5°C to 35°C (41°F to 95°F)
- Storage and transportation in original shipping packaging: -20°C to 60°C (-4°F to 140°F)
- Storage without packaging: 5°C to 43°C (41°F to 109°F)

Note: When you charge the battery, its temperature must be no lower than 10°C (50°F).

Relative humidity

- Operating: 8% to 95% at wet-bulb temperature 23°C (73°F)
- Storage and transportation: 5% to 95% at wet-bulb temperature 27°C (81°F)

Appendix B. Accessibility features

Lenovo is committed to making information technology accessible to everyone, including individuals with hearing, vision, mobility, cognitive, or speech disabilities. To get the most up-to-date and detailed accessibility features information for the product, go to https://support.lenovo.com/docs/product_accessibility_features.

© Copyright Lenovo 2024, 2025

Appendix C. Notices and trademarks

Notices

Lenovo may not offer the products, services, or features discussed in this document in all countries. Consult your local Lenovo representative for information on the products and services currently available in your area. Any reference to a Lenovo product, program, or service is not intended to state or imply that only that Lenovo product, program, or service may be used. Any functionally equivalent product, program, or service that does not infringe any Lenovo intellectual property right may be used instead. However, it is the user's responsibility to evaluate and verify the operation of any other product, program, or service.

Lenovo may have patents or pending patent programs covering subject matter described in this document. The furnishing of this document does not give you any license to these patents. You can send license inquiries, in writing, to:

Lenovo (United States), Inc.
8001 Development Drive
Morrisville, NC 27560
U.S.A.
Attention: Lenovo Director of Licensing

LENOVO PROVIDES THIS PUBLICATION "AS IS" WITHOUT WARRANTY OF ANY KIND, EITHER EXPRESS OR IMPLIED, INCLUDING, BUT NOT LIMITED TO, THE IMPLIED WARRANTIES OF NON-INFRINGEMENT, MERCHANTABILITY OR FITNESS FOR A PARTICULAR PURPOSE. Some jurisdictions do not allow disclaimer of express or implied warranties in certain transactions, therefore, this statement may not apply to you.

Changes are made periodically to the information herein; these changes will be incorporated in new editions of the publication. To provide better service, Lenovo reserves the right to improve and/or modify the products and software programs described in the manuals included with your computer, and the content of the manual, at any time without additional notice.

The software interface and function and hardware configuration described in the manuals included with your computer might not match exactly the actual configuration of the computer that you purchase. For the configuration of the product, refer to the related contract (if any) or product packing list, or consult the distributor for the product sales. Lenovo may use or distribute any of the information you supply in any way it believes appropriate without incurring any obligation to you.

The products described in this document are not intended for use in implantation or other life support applications where malfunction may result in injury or death to persons. The information contained in this document does not affect or change Lenovo product specifications or warranties. Nothing in this document shall operate as an express or implied license or indemnity under the intellectual property rights of Lenovo or third parties. All information contained in this document was obtained in specific environments and is presented as an illustration. The result obtained in other operating environments may vary.

Lenovo may use or distribute any of the information you supply in any way it believes appropriate without incurring any obligation to you.

Any references in this publication to non-Lenovo Web sites are provided for convenience only and do not in any manner serve as an endorsement of those Web sites. The materials at those Web sites are not part of the materials for this Lenovo product, and use of those Web sites is at your own risk.

© Copyright Lenovo 2024, 2025

Any performance data contained herein was determined in a controlled environment. Therefore, the result obtained in other operating environments may vary significantly. Some measurements may have been made on development-level systems and there is no guarantee that these measurements will be the same on generally available systems. Furthermore, some measurements may have been estimated through extrapolation. Actual results may vary. Users of this document should verify the applicable data for their specific environment.

This document is copyrighted by Lenovo and is not covered by any open source license, including any Linux agreement(s) which may accompany software included with this product. Lenovo may update this document at any time without notice.

For the latest information or any questions or comments, contact or visit the Lenovo Web site:

https://support.lenovo.com

Trademarks

Lenovo, Lenovo logo, ThinkPad, ThinkPad logo, and TrackPoint are trademarks of Lenovo. Thunderbolt is the trademark of Intel Corporation or its subsidiaries in the U.S. and/or other countries. Linux is the registered trademark of Linus Torvalds in the U.S. and other countries. Ubuntu is a registered trademark of Canonical Ltd. “Fedora” is a registered trademark of Red Hat, Inc. Microsoft, and Windows are trademarks of the Microsoft group of companies. The terms HDMI and HDMI High-Definition Multimedia Interface are trademarks or registered trademarks of HDMI Licensing LLC in the United States and other countries. Wi-Fi, Wi-Fi Alliance, and Miracast are registered trademarks of Wi-Fi Alliance. USB-C®is the registered trademark of USB Implementers Forum. All other trademarks are the property of their respective owners.


Lenovo