ROUND FLOOR GROMMETS



KoldLok® Round Floor Grommets are designed to seal openings in new and existing raised floor cutouts to block bypass airflow and maximize cooling system efficiency. Based on measurements at multiple data centers, on average 60% of valuable conditioned air is not reaching the air intake of IT equipment due to unsealed floor openings. This lost air, known as bypass airflow, contributes to IT equipment hot spots, cooling unit inefficiencies, and increasing infrastructure costs. KoldLok products specifically address bypass airflow and its detrimental effects on data center cooling.

Part No.	Overall Size	Max cutout size sealed	Usable cable area	Product height above floor	Hole cut diameter
GLKL40001CP	5.61" x 1.9"	4.125"	9.6 sq."	.4"	4"
GLKL40003CP	7.56" x 1.9"	6.125"	22.55 sq."	.4"	6"

Each product comes in a case pack of 10

FEATURES

- The split feature of the KoldLok Round 4" and 6" allows product installation or removal without disturbing cables
- Contain no loose or partially fastened parts, which can become separated or fall through the raised floor
- Satisfy NFPA 75 Section 5-4.4 requirement by self-dressing the raw metal edges of raised floor tile cable cutouts
- KoldLok products are compliant with directive 2002/95/EC of the European Parliament and the Council on the Restriction of the Use of Certain Hazardous Substances in Electrical and Electric Equipment (RoHS)

GREAT LAKES
DATA RACKS & CABINETS

4193 Route 6N • Edinboro, PA 16412 | 1.866.879.4522
View the complete Great Lakes product line at GreatCabinets.com
©2020 Great Lakes Data Racks & Cabinets. All rights reserved.

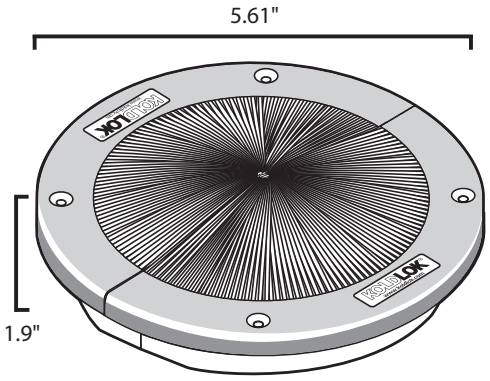

Round 4" Floor Grommet

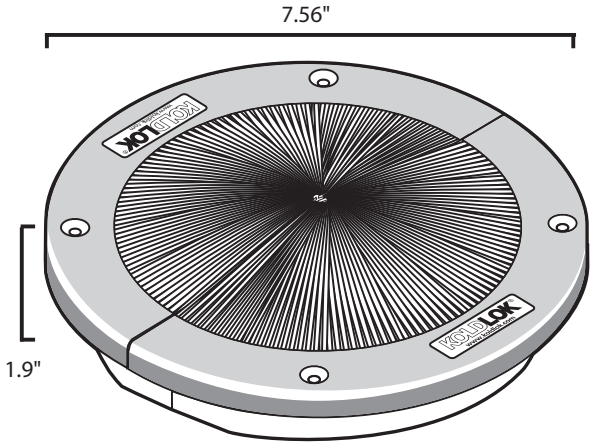

Round 6" Floor Grommet

BENEFITS

- Supports increasing cabinet density
- Increases existing cooling unit capacity
- Reduces the need to purchase additional cooling units
- Improves IT equipment reliability and extends equipment life
- Increases static pressure under the raised floor
- Improves volume of conditioned air delivery through perforated tiles and floor grates
- Compliance with best practices for all raised floor cooling configurations (Hot and Cold Aisle, Hot Aisle Containment, Cold Aisle Containment)
- Simple, installation saves time and labor and requires no downtime. Round grommets enable hole saw installation which reduces cutting time by over 50%
- Durable ABS frame and Hybrid Brush sealing surface can be used for years

HYBRID BRUSH TECHNOLOGY (HBT)

- Flexible and highly efficient sealing membrane
- An optional safety cover is available to ensure greater safety before rack and cable installation
- Effective bypass airflow sealing with four ½ inch cables penetrating the Grommet at a static pressure of 0.50 inches of water column
- HBT automatically seals around cables with no additional maintenance or monitoring required.
- Patented design is a more effective method of sealing air flow than using brushes or filament materials alone. The best sealing round grommet available.

PATENTED HBT SEALING SYSTEM

US Patent No. RE41863. Hybrid Brush Technology (HBT) design using thermoplastic elastomer creates a more effective seal than any other grommet. Tear lines minimize leakage in unused areas of the grommet when only a small number of penetrants are being used.

FLOOR MOUNTING SYSTEM

Four (4) self-drilling screws are provided for installation.

GROMMET FRAME

The frame is molded from durable ABS.

FINISH

Black

GREAT LAKES
DATA RACKS & CABINETS

4193 Route 6N • Edinboro, PA 16412 | 1.866.879.4522
View the complete Great Lakes product line at GreatCabinets.com
©2020 Great Lakes Data Racks & Cabinets. All rights reserved.