■ Images are for reference only. Products are subject to change without notice.
■ Please read the instruction manual carefully before use and keep it for future reference.

EN

TCL

RP312BWE0	RP350BWE0
RP312BWD0	RP350BWD0
RP312BWC0	RP350BWC0
RP312BBE0	RP350BBE0
RP312BBD0	RP350BBD0
RP312BBC0	RP350BBC0
RP312BLE0	RP350BLE0
RP312BLD0	RP350BLD0
RP312BLC0	RP350BLC0

USER MANUAL

REFRIGERATOR

PLEASE READ ALL INSTRUCTIONS BEFORE USING THIS APPLIANCE

Contents

EN

Thank you for purchasing a TCL refrigerator. We hope you enjoy using your new TCL refrigerator. We are committed to providing you with excellent service.

Safety Instructions ---- 2

Product Introduction ---- 5

Handling and placement ---- 6

Product Features ---- 7

Preparations prior to use ---- 7

Operation keys ---- 8-14

Care and maintenance ---- 14

Failure analysis ---- 15

Non-failure situations ---- 15

Technical parameter and Packing list ---- 16-18

Safe recovery instructions ---- 19

1.This appliance is not intended for use by persons (including children) with reduced physical, sensory or mental capabilities, or lack of experience and knowledge, unless they have been given supervision or instruction concerning the use of the appliance by a person responsible for their safety.Children should be supervised to ensure that they do not play with the appliance.

2.If the supply cord is damaged, it must be replaced by the manufacturer, its service agent or similarly qualified persons in order to avoid a hazard.

3.This appliance can be used by children aged from 8 years and above and persons with reduced physical, sensory or mental capabilities or lack of experience and knowledge if they have been given supervision or instruction concerning use of the appliance in a safe way and understand the hazards involved. Children shall not play with the appliance. Cleaning and user maintenance shall not be performed by children without supervision.

4.WARNING: Keep ventilation openings, in the appliance enclosure or in the built-in structure, clear of obstruction.

5.WARNING: Do not use mechanical devices or other means to accelerate the defrosting process, other than those recommended by the manufacturer.

6.WARNING: Do not damage the refrigerant circuit.

7.WARNING: Do not use electrical appliances inside the food storage compartments of the appliance, unless they are of the type recommended by the manufacturer.

8.Do not store explosive substances such as aerosol cans with a flammable propellant in this appliance.

9.This appliance is intended to be used in household and similar applications such as

— Staff kitchen areas in shops, offices and other working environments;

— Farm houses and by clients in hotels, motels and other residential-type environments;

— Bed and breakfast-type environments;

— Catering and similar non-retail applications.

10.This product contains a light source of energy efficiency class F for light source ERP, tested with (without) light cover.

1.Warning

Warning: No barrier should be placed around the appliance or within the built-in structure to ensure free ventilation.

Warning: It is forbidden to speed up the defrosting process using any mechanical equipment or by any method other than that recommended by the manufacturer.

Warning: Do not damage the refrigerant circuit.

Warning: Do not use any electrical appliances inside the food chamber of the appliance unless they are of the type recommended by the manufacturer.

Warning: Do not place liquid beverages or food contained in glass containers in the freezing chamber to prevent breakage and shattering.

Warning: If the refrigerator is powered off, it should be powered on again 5 minutes later to prevent damage to the compressor.

Warning: If any live part, abnormal noise, smell, smoke, or other abnormalities are noticed during use, it is essential to immediately power off the appliance and promptly contact the after-sales service department of the company.

Warning: Avoid placing your finger or hand under the refrigerator, especially at the rear bottom, as sharp objects may cause injury.

Warning: Children must not play or climb on the refrigerator. Parents must supervise children to prevent potential danger.

Warning: Avoid placing your hand between the doors to open or close them to prevent jamming your fingers. Always use the door handle to open or close the door.

For refrigerating appliances with climate class

Depending on the climate class, This refrigerating appliance is intended to be used at ambient ambient temperature range as specified the following specified table.

The climate class can be found on the rating plate. The product may not operate properly at temperatures outside of the specific range.

You can find the climate class on the label inside your refrigerator.

Applicable temperature range

The refrigerator is designed to operate normaly in the temperature range specified by its class rating.

Class	symbol	Ambient Temperature range (°C)
Extended Temperate	SN	+10 to +32
Temperate	N	+16 to +32
Subtropical	ST	+16 to +38
Tropical	T	+16 to +43

NOTE

The cooling performance and power consumption of the refrigerator may be affected by the ambient temperature, the door-opening frequency, and the location of the refrigerator, We recommend adjusting the temperature settings as appropriate.



Warning: Risk of fire / flammable materials

Warning: When positioning the appliance, ensure the supply cord is not trapped or damaged.

Warning: Avoid placing multiple portable socket outlets or power supplies at the rear of the appliance.

Children aged from 3 to 8 years are not permitted to load and unload refrigerating appliances.

Prolonged door opening can lead to a significant increase in temperature within the appliance compartments.

Regularly clean surfaces that come into contact with food and accessible drainage systems.

Clean water tanks if they have not been used for 48 hours; flush the water system connected to a water supply if water has not been drawn for 5 days.

Store raw meat and fish in suitable containers in the refrigerator to prevent contact with or dripping onto other food.

Two-star frozen-food compartments are suitable for storing pre-frozen food, making ice-cream, and producing ice cubes.

One-, two-, and three-star compartments are not suitable for freezing fresh food.

If the refrigerating appliance is left empty for extended periods, switch it off, defrost, clean, dry , and leave the door open to prevent mould development within the appliance.

2. Cautions

Cautions: The power supply for this product must match the power supply stated on the nameplate, and a standard independent 3-hole socket rated at 10A or higher grounded must be used.

Avoid sharing one socket among multiple appliances to prevent overheating and potential fire hazards.

Cautions: Avoid pulling the power cord by hand. Always hold and unplug the power connector from the socket to disconnect the power supply.

Do not touch the power cord or connector with wet hands to prevent the risk of electric shock.

Cautions: Do not allow the power cord to be squeezed by the refrigerator or any heavy load, and avoid extreme bending of the power cord.

Damage or peeling of the power cord may lead to fire or electric shock hazards.

If the power cord is broken or cut, please contact the after-sales service department immediately for assistance.

Cautions: Do not store any flammable or explosive materials, corrosive acids, or alkaline substances in the refrigerator.

Cautions: Do not use the refrigerator in rainy conditions or under direct sunlight.

Cautions: Do not place containers with fluids on the refrigerator, as breakage or overturning of the container may compromise the electrical insulation of the refrigerator, leading to electric shock or fire hazards.

Cautions: The refrigerator must not be disassembled or modified without permission. Repairs to the refrigerator must be carried out by a specialist.

Cautions: In the event of a leakage of any flammable gas such as coal gas, first, close the leaking valve, then open the window for ventilation. Do not unplug the refrigerator connector immediately to avoid the risk of fire or explosion due to electric sparks.

Cautions: Refrigerating appliances, especially refrigerator-freezers Type I, may not operate consistently if used for an extended period below the cold end of the temperature range for which the appliance is designed. This may result in defrosting of contents or the temperature becoming too warm in the frozen food compartment.

Cautions: Effervescent drinks should not be stored in food freezer compartments or cabinets, or in low-temperature compartments or cabinets. Additionally, some products , such as iced water, should not be consumed when excessively cold.

Cautions: Do not exceed the storage times recommended by food manufacturers for any kind of food.

Cautions: Take precautions to prevent an undue rise in the temperature of frozen food while defrosting the refrigerating appliance. You can use various materials to wrap the food and prevent an undue rise in temperature.

Cautions: The rise in temperature of frozen food during manual defrosting, maintenance, or cleaning may reduce its storage life.

Cautions: Ensure proper care for frozen food storage during extended periods when the refrigerating appliance is not running, such as during a power outage or refrigeration system failure.

Cautions: Steps to take when temporarily or permanently switching off the refrigerating appliance include emptying, cleaning, and drying it, and propping the door(s) or lid(s) ajar.

EN

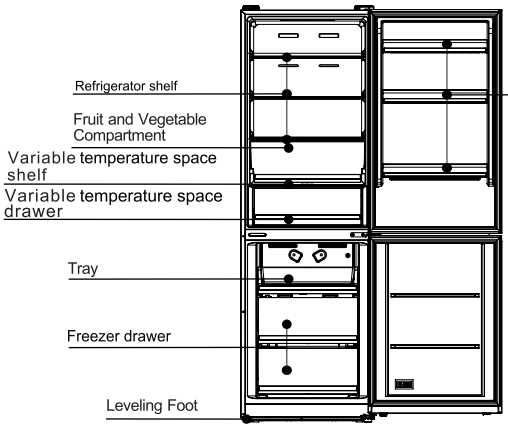

Applicable model:

RP312BWE0
RP312BWD0
RP312BWC0
RP312BBE0
RP312BBD0
RP312BBC0
RP312BLE0
RP312BLD0
RP312BLC0

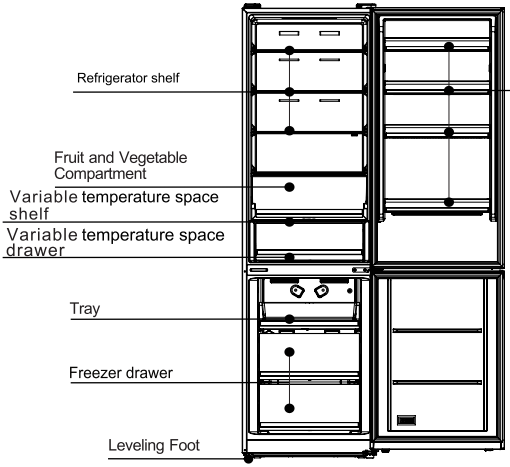

Applicable model:

RP350BWE0
RP350BWD0
RP350BWC0
RP350BBE0
RP350BBD0
RP350BBC0
RP350BLE0
RP350BLD0
RP350BLC0

Some features and accessories of the refrigerator you purchased may not be completely consistent with this legend, please refer to the packing list.

Friendly reminder:
If your product is an improved version of the product, it may differ slightly from the instructions provided. However, rest assured that its performance and usage method remain unchanged. You can confidently proceed with its usage.

Handling and placement

EN

A certain amount of space should be left around the refrigerator, shown in the figure.

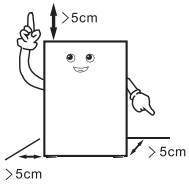

While handling, avoid contact between the refrigerator door side and handling tools.

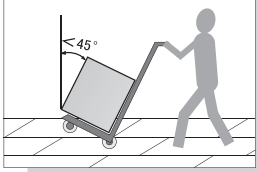

Position the refrigerator in a dry, well-ventilated area, away from direct sunlight and heat sources.

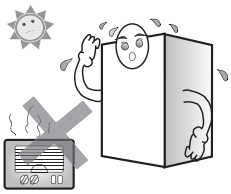

Place the refrigerator on a flat and stable surface. If the ground is uneven, adjust the leveling legs to ensure stability.

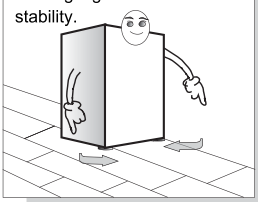

Avoid placing the refrigerator in excessively cold environments where freezing may occur.



Removing the foam base aids in bottom heat dissipation and reduces the risk of fire.

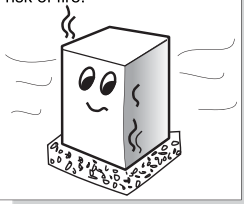

***Friendly reminder*:**

--When handling the refrigerator, at least two persons are required: one to lift the top of the rear part, and the other to handle the bottom. If one part alone is clamped, it can be dangerous and may cause accidents.

--When moving the refrigerator, the lower runner may damage and scratch the floor. If you need to move the refrigerator over a long distance, use adhesive tape to secure the internal accessories to prevent them from getting damaged by crashing into each other.

--Place the refrigerator in a position with minimal vibration or where it is least exposed to vibration. For users in areas prone to earthquakes, ensure the refrigerator is fixed against a wall or pole to prevent accidents.

--Leave sufficient clearance around the refrigerator. If the clearance is too small or if goods are placed on top or too close to the sides, or if items are pasted onto the sides, it can affect the refrigerator's heat dissipation, leading to unnecessary electricity wastage and potential damage to walls and other items. Contact between the back of the refrigerator and the wall can also cause vibration and noise.

--Adjust the front part and adjusting leg of the refrigerator to level it. An unlevel refrigerator can cause vibration and noise.

Product Features

- **Intelligent frost-free refrigerator**
  The internationally renowned compressor and latest frost-free technology are adopted to achieve energy conservation, efficiency and superior performance.
- **Temperature control is intelligent and accurate to keep fresh for a longer time**
  The microcomputer control system is used to set and control the temperatures of Refrigerating Chamber, Variable-temperature Chamber and Freezing Chamber respectively, which makes the temperature adjustment more accurate and keeps fresh for a longer time.
  Some models feature fully intelligent control, requiring no manual adjustment or user intervention.
- **Extra large LED display, touch buttons**
  LED display screen respectively displays the set temperature and functional status of the Refrigerating Chamber, Variable-Temperature Chamber and the Freezing Chamber. At the same time, touch buttons are adopted with fashionable and clear appearance and convenient operation.
- **Intelligent temperature control**
  Under the condition of intelligent temperature control, the refrigerator can automatically adjust the temperature according to the change of ambient temperature, achieving the ideal refrigeration effect without manual adjustment.
- **The Variable-temperature Chamber with large capacity**
  The temperature regulation of Variable-temperature Chamber can achieve -1 → 4 → 3 → 2 → 1 → 0 →-1 (°C) → ... Switch function.
- **Quick Refrigerating and Quick Freezing function**
  Quick Refrigerating function drops the temperature of the Refrigerating Chamber to 2°C quickly, which makes the fresh-keeping effect better and makes it easier to have iced drinks;
  Quick Freezing function can freeze the food in the Freezing Chamber to below -18°C in the shortest time, and keep fresh more scientifically.
- **Alarm warning function**
  This refrigerator is equipped with fault prompt and alarm function when the refrigeration door is not closed properly, which is convenient for users to use and maintain.

Preparations prior to use

1. Remove all packing assemblies such as case fixing tape etc., especially the foam base.
2. Use warm wet cloth to clean both interior and exterior of the refrigerator, (neutral detergent can be added in warm water).
3. After leveling and cleaning the refrigerator, stand it for about 2 hours before plugging the power plug for powering on, and cool the refrigerator for 2 to 3 hours before storing foods.

1. Remove fixing tape

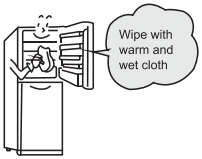

In hot summer, 24 hours are needed to fully freeze the food. Check the refrigerating condition on the second day.

2. Connect to power

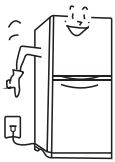

3. Store food after connecting to power for 2-3 hours

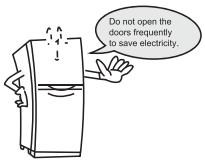

The plastics deodorant will disappear. automatically after freezing for a while.

Operation keys

EN

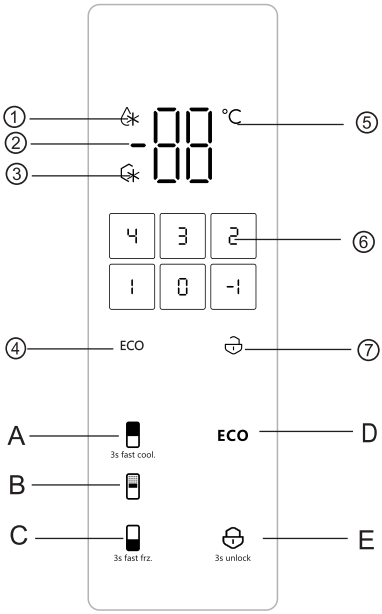

1. Operation buttons

Button A… Refrigerating temperature control button

Button B… Variable temperature control button

Button C… Freezing control button

Button D… ECO button

Button E… Lock/unlock button

2. Display screen

①…Quick Refrigerating mode

②…Temperature display

③…Quick Freezing mode

④…ECO mode

⑤…Temperature icon

⑥…Variable Temperature Choices

⑦…Unlocking display

3. Display

Power-on each time, display fully for 3 seconds with the startup ring, and then enter the normal operation display (the set temperatures of the Refrigerating Chamber, the Variable-temperature Chamber and the Freezing Chamber are 5/4/-18°C respectively for the first time).

Temperature display area: When there is no fault, the set temperature of the refrigerating chamber is displayed circularly every 3 seconds; When there is a fault, the fault code is cycled to display after locking. When the temperature is set, the indicating area of the refrigerating chamber is lit and the rest areas are extinguished.

Display control: Under normal circumstances, in the locked state, the display screen goes out if there is no door opening action and button-free operation after 30 seconds;

Every time there is a door opening action or a button operation, the display screen restores normal display;

When a fault “visible fault code” occurs, the display screen lights up, and goes out after 60 seconds.

4. Lock and unlock

In the unlocked state, press and hold the lock/unlock button continuously for 3 seconds to enter the locked state, and the unlock icon goes out;

In the locked state, press and hold the lock/unlock button continuously for 3 seconds to enter the unlocked state, and the unlock icon lights up.

After 30 seconds of button-free operation, it automatically enters the locked state.

The following 5~8 functions must be carried out in the unlocked state.
If the operation is in the locked state, the “Unlock” icon flashes for 3 seconds, and a beep prompt is given at the same time.

5. Temperature and function setting of Refrigerating Chamber

If 2~8 °C is not displayed in the indicating area of refrigerator room, press the refrigeration button once first.

Press the refrigeration button to adjust the temperature of the Refrigerating chamber, and the temperature rises by 1°C every time the refrigeration button is pressed; When the temperature reaches 8°C, press the refrigeration button again, cycle the temperature to 2°C, and so on.

Press the refrigeration button for 3 seconds to set the Quick Refrigerating mode, and then the Quick Refrigerating icon lights up. At this time, the refrigeration display shows 2°C; In Quick Refrigerating mode, press the refrigeration button for 3 seconds to exit the Quick Refrigerating mode, and Refrigerating Chamber setting will be restored to the choice before setting the Quick Refrigerating mode.

The setting is going to take effect after locking.

6. Setting of the temperature and function of Variable-temperature Chamber

Press the variable temperature button to adjust the temperature of the variable-temperature chamber. Each time you press the variable temperature button,

The choice is as -1 → 4 → 3 → 2 → 1 → 0 →-1 (°C) → … Temperature cycling; The setting is going to take effect after locking.

7. Setting of the temperature and function of Freezing Chamber

If -16~-24°C is not displayed in the indicated area of refrigeration room, press the freeze button once first.

Press the Freezing button to adjust the temperature of the Freezing chamber, and the temperature drops by 1°C every time the Freezing button is pressed; After the temperature reaches -24°C, press the freeze button one more time, cycle the temperature to -16°C, and so on.

Press the Freezing button for 3 seconds to set the Quick Freezing mode, and then the Quick Freezing icon lights up. At this time, the Freezing display shows -26°C; Press the Freezing button for 3 seconds to exit the Quick Freezing mode, and restore the Freezing Chamber setting to the choice before setting the Quick Freezing mode,

The setting is going to take effect after locking.

8. ECO mode

Press the “ECO” button and switch to the “ECO” mode immediately. The refrigeration is set to 5°C, the freeze is set to-18°C, and the variable temperature maintains the original choice; In the ECO mode, press the “ECO” button again, and you will exit the smart mode immediately.

9. Display control function

After 60 seconds of operation, the back light automatically goes out; When the back light goes out, press any button to restore the back light.

10. Power-off memory

When the power is cut off, the current operating state is saved, and after the power is supplied, it still works according to the setting before the power is cut off.

11. Door opening alarm

If the door of Refrigerating Chamber is not closed entirely or opened for more than 120 seconds, a beep alarm will be issued, and the alarm will stop after closing the door.

12. Fault prompt

When the following fault prompts appear on the display screen, the refrigerator is out of order. The refrigerator may still run partially if a fault occurs , but it should be contacted for maintenance as soon as possible to realize the optimal operation of the refrigerator.

Prompt	E1	E2	E3
Fault	Refrigeration temperature sensor circuit	Freeze temperature sensor circuit	Variable temperature sensor circuit
Prompt	E4	E5	E6
Fault	Freezing and defrosting sensor	Ambient temperature sensor	Communication circuit

EN

Reversible door operation

List of tools to be provided by users			
	Cross screwdriver		Putty knife Straight screwdriver
	5/16” socket spanner		Masking paper tape

1) Remove articles from the door body.

2) Remove the upper hinge cover, hinge cover decorative cap and upper hinge, and disconnect the signal lines (1, 2 signal line terminals) on the top right side of the refrigerator.

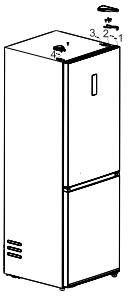

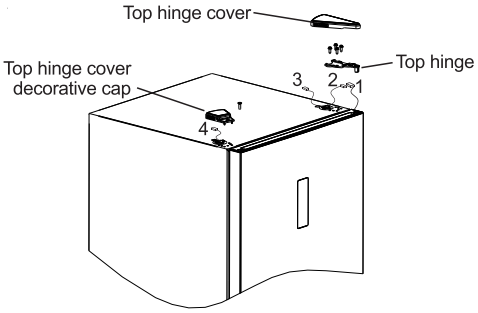

3) Remove the refrigeration door body (pay attention to the small parts such as shaft sleeve and stop on the door, make sure they are not to be lost); Remove the middle hinge, and remove the hinge hole decorative cap on the other side.

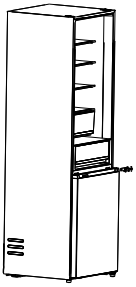

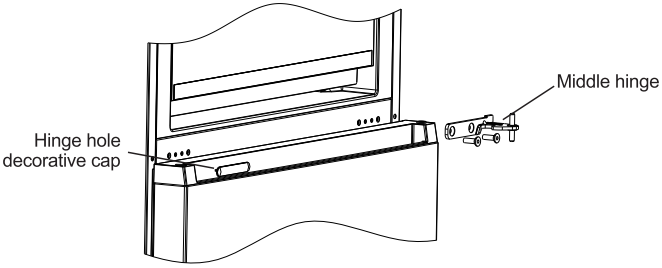

4) Remove the freezer door body (pay attention to the small parts such as shaft sleeve and stop on the door, make sure they are not to be lost);
Remove the lower hinge and leveling foot. Remove the lower hinge stop and the hinge shaft and install them on the other side of the hinge, and install the modified lower hinge on the other side of the refrigerator; The leveling foot is installed on the original hinge side.

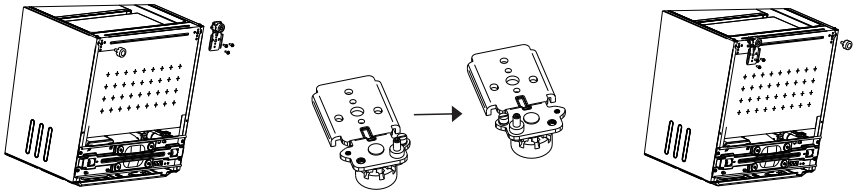

5) Refrigeration door replacement:

Remove the upper end cap plate and the end cover hole plug of the refrigeration door, install the upper shaft sleeve and the door body signal line on the other side and cover the upper end cap plate; Then install the end cap hole plug on the other side of the upper end cap:

Remove the door self-lock component, door holder and shaft sleeve of the refrigeration door, install the self-lock on the left side of the lower end cap of the refrigeration door, and replace the door holder and shaft sleeve with the left side of the lower end cap of the refrigeration door.

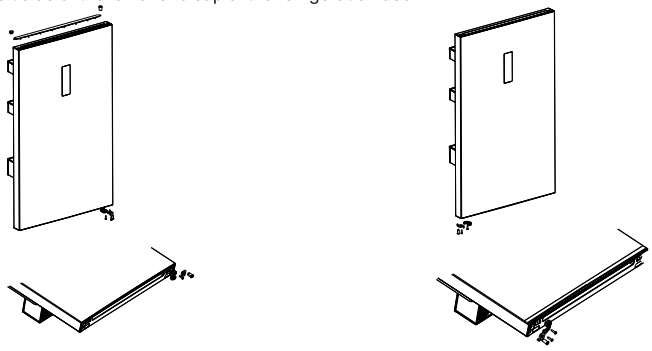

6) Replacement of freezer door:

Remove the shaft sleeve of the upper end cap of the freezer door, and install them at the left and right interchangeably.

Remove the freeze door self-lock component, door holder and shaft sleeve, install the self-lock on the left side of the lower end cap of the freeze door, and replace the door holder and shaft sleeve with the left side of the lower end cap of the freeze door.



7) Install the replaced refrigeration door on the lower hinge, then install the middle hinge, and cover the hinge hole decorative cap.

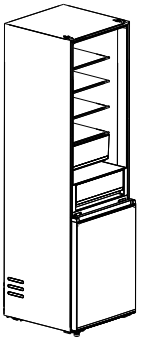

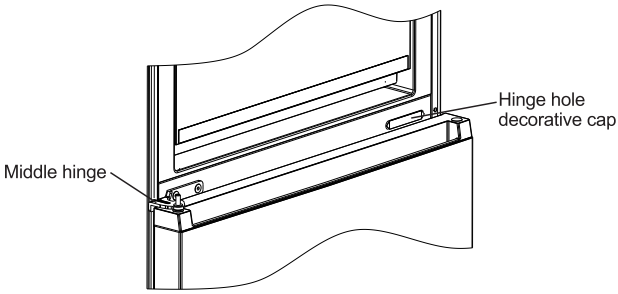

8) Place the refrigeration door body on the middle hinge and install the upper hinge; Connect the refrigerator top signal 4 with the door body signal line 1. Finally, the hinge cover is installed at the left hinge; The hinge cover decorative cap is installed at the top of the right side.

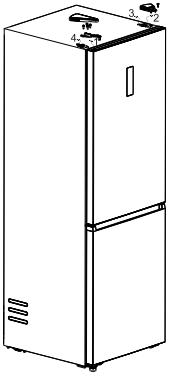

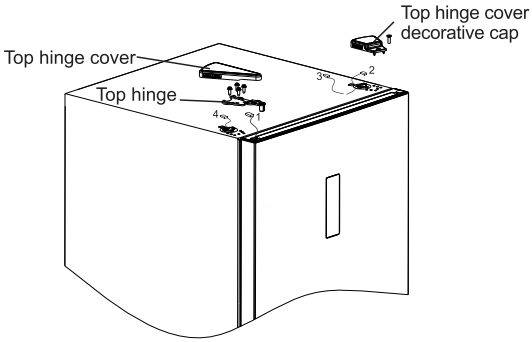

(The above pictures are for reference only, and the actual configuration is subject to the purchased physical objects or the seller's statement)

Operation keys

Place the bottle frame horizontally above the bulges on both sides of the door body, observe that the grooves on both sides of the bottle frame should be aligned with the bulges on both sides of the door, and then use a little force to clamp the bottle frame into the bulges on both sides.

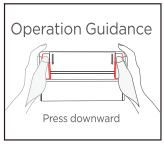

Disassembly and assembly method of accessory

--Glass shelf in the refrigerating chamber:
Pull the shelf outwardly and upwardly in a slight way to take out.
--Fruit and vegetable box: for storing vegetables and fruits. It can be taken out by pulling outwardly.
--Drawer in the freezing chamber: storing foods to be preserved for long-term, such as meat and fish. It can be taken out by pulling outwardly and lifting upwardly.
Kindly tips: It is recommended to put into the large piece of meat after being cut into small pieces, to avoid difficult cutting after being frozen. The quick-freezing foods shall be distributed uniformly and stored together after being frozen.
--Bottle pedestal at the refrigerating door: storing eggs, various bottled drinks and other sundries. It can be taken out by being lifted up slightly.

Note: when disassembling the bottle pedestal in the refrigerating door, avoid pulling it out forcibly to prevent damage to the refrigerator.

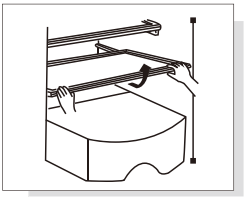

Take out by pulling upwardly and outwardly in a slight way

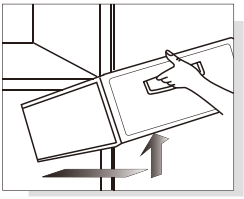

Remove by gently pulling it outward and upward.

Changing the Light

Any replacement or maintenance of the LED lamps is intended to be made by the manufacturer, itsservice agent or similar qualified person.

Care and Maintenance

It is recommended to perform refrigerator maintenance once a month.

Use a damp cloth or neutral detergent (cleanser essence) towipe away any oil contamination and dirt. After cleaning,ensure to thoroughly wipe off any residue of the detergent.

--Do not use alkaline detergent, soap powder, gasoline and alcohol, talcum powder etc.; otherwise the coats or plastics may be damaged;
--Regularly clean the refrigerator body and clear the ground dusts to keep the refrigerator clean.
Inspections after maintenance:

Check for any damages to the power line and plug.Look for dust on the power plug.Feel for abnormal heat on the plug.Check if the socket is loose.Ensure that the plug is fully inserted.

Note:

If the power line andplug are damaged and there is dust present, there is a risk of electric shock or fire.

After unplugging the plug, wait 5 minutes before re-plugging it; Do not put your hands under the refrigerator to avoid getting hurt.

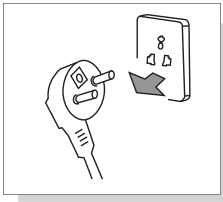

Unplug the refrigerator plug before cleaning



Please use neutral detergent

Failure analysis

EN

The following items shall be inspected before occurring failures which require maintenance:

Failures:Refrigerator does not work,The refrigeration effect is poor

Causes:
1.Check the connection of the power supply.
2.Check whether the refrigerator is exposed to direct sunlight or if there is a heat source nearby.
3.Check whether there is adequate heat dissipation space around the refrigerator.

1.Ensure the power supply is properly connected.2.Move the refrigerator to a location without direct sunlight or heat sources nearby.3.Leave adequate space between the refrigerator and the wall for proper heat dissipation.

Failures:Foods in refrigerating chamber are frozen

Causes:1. Check whether the setting temperature is too low. 2. Additionally, rearrange foods with high water content to the door side of the glass shelf.

Remedies:1.Adjust the temperature settings accordingly to ensure they are adequately increased.
2.Rearrange foods with high water content to the door side of the glass shelf.

Failures:There is abnormal sound in refrigerator

Causes:1. Check whether the bottom of refrigerator is stable. 2. Check whether the refrigerator is too close to the wall. 3. Check whether the refrigerator touches other objects.
Remedies:1. Adjust the bottom adjusting leg to stabilize the refrigerator. 2. Leave sufficient space around refrigerator. 3. Remove the obstacles.

Failures:There is abnormal odor in refrigerator

Causes:1. Check whether the foods are sealed for storage. 2. Check whether the refrigerator is clean. 3. Check whether the foods have been stored for too long.
Remedies:1. Sealed foods for storage. 2. Regularly clean the refrigerator. 3.Do not store foods for too long.

Non-failures

Phenomenon:The surface between the refrigerating chamber and freezing chamber feels warm or hot on two sides and the spacing part.

Cause:The refrigerator pipes (such as condenser and anti-fog pipes) are located on two sides and the front part of the refrigerator for heat dissipation and to prevent condensation.

Phenomenon:The refrigerator door is too tight and not easy to open.

Cause:When the refrigerator door is closed and immediately reopened, hot air enters the refrigerator and contracts, creating a pressure difference. This makes it difficult to open the door immediately, but it becomes easier after some time.

Phenomenon:Water ripples are observed in the refrigerator.

Cause:The sound of water ripples can occur when the compressor starts or stops, as well as when water is produced during the defrosting process.

Phenomenon:There is a humming sound in the refrigerator.

Cause:The compressor running produces this sound. If the refrigerator is not leveled, the sound may be louder. Additionally, the shrinkage and swelling of the case, especially when it's cold or the door is opened, can also contribute to this sound.

Phenomenon:Condensation or frosting is observed on the freezing chamber door surface or food surface.

Cause:High temperature or humidity around the refrigerator; prolonged opening of the door; foods with high water content that are not sealed or tightly wrapped.

Phenomenon:Condensation is present on the built-in light surface.

Cause:The light generates heat when illuminated, and if the door is left open for an extended period, a temperature difference occurs, leading to condensation on the light case.

Phenomenon:Condensation and water mist are present on the refrigerator body.

Cause:High humidity around the refrigerator causes moisture in the air to accumulate in the case, resulting in condensation.

Model	RP312BWE0	RP312BWD0	RP312BWC0	RP312BBE0	RP312BBD0	RP312BBC0
Climate type	SN/N/ST/T	SN/N/ST/T	SN/N/ST/T	SN/N/ST/T	SN/N/ST/T	SN/N/ST/T
Electric shock resistance star	I	I	I	I	I	I
Sign	****	****	****	****	****	****
Total volume	312L	312L	312L	312L	312L	312L
Storage volume of fridge	178L	178L	178L	178L	178L	178L
Variable temperature volume	32L	32L	32L	32L	32L	32L
Storage volume of freezer	102L	102L	102L	102L	102L	102L
Power type	230V~/50Hz	230V~/50Hz	230V~/50Hz	230V~/50Hz	230V~/50Hz	230V~/50Hz
Rated current	1.2A	1.2A	1.2A	1.2A	1.2A	1.2A
Freezing capacity	7kg/24h	7kg/24h	7kg/24h	7kg/24h	7kg/24h	7kg/24h
Power consumption	254kwh/year	203kwh/year	162kwh/year	254kwh/year	203kwh/year	162kwh/year
Lamp power	1.2W	1.2W	1.2W	1.2W	1.2W	1.2W
Weight	56kg	67kg	72kg	56kg	67kg	72kg
Dimension (WxDxHmm)	595x600x1850	595x600x1850	595x600x1850	595x600x1850	595x600x1850	595x600x1850
Refrigerant and charge amount	R600a,63g	R600a,63g	R600a,63g	R600a,63g	R600a,63g	R600a,63g
Noise level (dB(A) re 1 pW)	39	39	39	39	39	39

Model	RP312BLE0	RP312BLD0	RP312BLC0			
Climate type	SN/N/ST/T	SN/N/ST/T	SN/N/ST/T			
Electric shock resistance star	I	I	I			
Sign	****	****	****			
Total volume	312L	312L	312L			
Storage volume of fridge	178L	178L	178L			
Variable temperature volume	32L	32L	32L			
Storage volume of freezer	102L	102L	102L			
Power type	230V~/50Hz	230V~/50Hz	230V~/50Hz			
Rated current	1.2A	1.2A	1.2A			
Freezing capacity	7kg/24h	7kg/24h	7kg/24h			
Power consumption	254kwh/year	203kwh/year	162kwh/year			
Lamp power	1.2W	1.2W	1.2W			
Weight	56kg	67kg	72kg			
Dimension (WxDxHmm)	595x600x1850	595x600x1850	595x600x1850			
Refrigerant and charge amount	R600a,63g	R600a,63g	R600a,63g			
Noise level (dB(A) re 1 pW)	39	39	39			

Model	RP350BWE0	RP350BWD0	RP350BWC0	RP350BBE0	RP350BBD0	RP350BBC0
Climate type	SN/N/ST/T	SN/N/ST/T	SN/N/ST/T	SN/N/ST/T	SN/N/ST/T	SN/N/ST/T
Electric shock resistance star	I	I	I	I	I	I
Sign	****	****	****	****	****	****
Total volume	350L	350L	350L	350L	350L	350L
Storage volume of fridge	216L	216L	216L	216L	216L	216L
Variable temperature volume	32L	32L	32L	32L	32L	32L
Storage volume of freezer	102L	102L	102L	102L	102L	102L
Power type	230V~/50Hz	230V~/50Hz	230V~/50Hz	230V~/50Hz	230V~/50Hz	230V~/50Hz
Rated current	1.2A	1.2A	1.2A	1.2A	1.2A	1.2A
Freezing capacity	7kg/24h	7kg/24h	7kg/24h	7kg/24h	7kg/24h	7kg/24h
Power consumption	259kwh/year	207kwh/year	166kwh/year	259kwh/year	207kwh/year	166kwh/year
Lamp power	1.2W	1.2W	1.2W	1.2W	1.2W	1.2W
Weight	62kg	71kg	76kg	62kg	71kg	76kg
Dimension (WxDxHmm)	595x600x2010	595x600x2010	595x600x2010	595x600x2010	595x600x2010	595x600x2010
Refrigerant and charge amount	R600a,63g	R600a,63g	R600a,63g	R600a,63g	R600a,63g	R600a,63g
Noise level (dB(A) re 1 pW)	39	39	39	39	39	39

Model	RP350BLE0	RP350BLD0	RP350BLC0			
Climate type	SN/N/ST/T	SN/N/ST/T	SN/N/ST/T			
Electric shock resistance star	I	I	I			
Sign	****	****	****			
Total volume	350L	350L	350L			
Storage volume of fridge	216L	216L	216L			
Variable temperature volume	32L	32L	32L			
Storage volume of freezer	102L	102L	102L			
Power type	230V~/50Hz	230V~/50Hz	230V~/50Hz			
Rated current	1.2A	1.2A	1.2A			
Freezing capacity	7kg/24h	7kg/24h	7kg/24h			
Power consumption	259kwh/year	207kwh/year	166kwh/year			
Lamp power	1.2W	1.2W	1.2W			
Weight	62kg	71kg	76kg			
Dimension (WxDxHmm)	595x600x2010	595x600x2010	595x600x2010			
Refrigerant and charge amount	R600a,63g	R600a,63g	R600a,63g			
Noise level (dB(A) re 1 pW)	39	39	39			

Model / Annex	RP312BWE0	RP312BWD0	RP312BWC0	RP312BBE0	RP312BBD0	RP312BBC0	RP312BLE0	RP312BLD0	RP312BLC0
Refrigerator shelf	3	3	3	3	3	3	3	3	3
Variable temperature space drawer	1	1	1	1	1	1	1	1	1
Variable temperature space shelf	1	1	1	1	1	1	1	1	1
Fruit and Vegetable Compartment	1	1	1	1	1	1	1	1	1
Freezer drawer	3	3	3	3	3	3	3	3	3
Tray	0	0	0	0	0	0	0	0	0
Egg box	1	1	1	1	1	1	1	1	1
Bottle rack	3	3	3	3	3	3	3	3	3
Operating instruction	1	1	1	1	1	1	1	1	1

Model / Annex	RP350BWE0	RP350BWD0	RP350BWC0	RP350BBE0	RP350BBD0	RP350BBC0	RP350BLE0	RP350BLD0	RP350BLC0
Refrigerator shelf	4	4	4	4	4	4	4	4	4
Variable temperature space drawer	1	1	1	1	1	1	1	1	1
Variable temperature space shelf	1	1	1	1	1	1	1	1	1
Fruit and Vegetable Compartment	1	1	1	1	1	1	1	1	1
Freezer drawer	3	3	3	3	3	3	3	3	3
Tray	0	0	0	0	0	0	0	0	0
Egg box	1	1	1	1	1	1	1	1	1
Bottle rack	4	4	4	4	4	4	4	4	4
Operating instruction	1	1	1	1	1	1	1	1	1

The product has multiple configurations, please refer to the actual product for details.

EN

Disposal

Old appliances still have some surplus value. An environmentally friendly approach will ensure that valuable raw materials are recycled.

The refrigerants used in your equipment and insulation materials require special handling procedures. Make sure there is no pipe damage on the back of the equipment before handling.

Up-to-date information on the options for disposing of old equipment and packaging from old equipment can be obtained from the local municipal office.

Correct Disposal of this product.	
	This marking indicates that this product should not be disposed with other household wastes throughout the EU. To prevent possible harm to the environment or human health from uncontrolled waste disposal, recycle it responsibly to promote the sustainable reuse of material resources. To retum your used device, please use the return and ollection systems or contact the retailer where the product was purchased. They can take this product for environmental safe recycing.

Table 1 Climate classes

Class	Symbol	Ambient temperature ranges℃
Extended temperate	SN	+ 10 to + 32
Temperate	N	+ 16 to + 32
Subtropical	ST	+ 16 to + 38
Tropical	T	+ 16 to + 43

Extended temperate:'this refrigerating appliance is intended to be used at ambient temperatures ranging from 10 °C to 32 °C';

temperate: 'this refrigerating appliance is intended to be used at ambient temperatures ranging from 16 °C to 32 °C';

Subtropical: 'this refrigerating appliance is intended to be used at ambient temperatures ranging from16°C to 38°C';

Tropical: 'this refrigerating appliance is intended to be used at ambient temperatures ranging from16°C to 43°C';

Dear customer

If you need customer service, please check warranty card for further information.

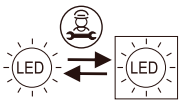

Replaceable (LED only) light source by a professional