Linux User Guide



ThinkStation P8

Read this first

Before using this documentation and the product it supports, ensure that you read and understand the following:

- *Safety and Warranty Guide*
- *Generic Safety and Compliance Notices*
- *Setup Guide*

Sixth Edition (August 2026)

© Copyright Lenovo 2026.

LIMITED AND RESTRICTED RIGHTS NOTICE: If data or software is delivered pursuant to a General Services Administration “GSA” contract, use, reproduction, or disclosure is subject to restrictions set forth in Contract No. GS-35F-05925.

Contents

Discover your Lenovo computer iii

Chapter 1. Overview 1

Front 1
Left 4
Top 5
Rear 6
USB specifications 7
Platform specifications 7

Chapter 2. Get started 11

Initial setup 11
Connect to external displays 11
Rack-mounted chassis 12
Get started with Ubuntu Desktop (22.04 LTS) . . . 12
Get started with Ubuntu Desktop (24.04 LTS) . . . 12
Set the power plan 13
Security solutions 13
- Use physical locks 13
- Use BIOS security solutions 15
- UEFI BIOS passwords 16

Chapter 3. Explore your computer . . 18

Expansion modules 18
Cooling system 20
UEFI BIOS 21
- Enter the UEFI BIOS menu 21
- Navigate the UEFI BIOS menu 21
- Map UEFI BIOS USB ports to physical connectors 22
- Update UEFI BIOS 22

ThinkStation DASH support 23
- Enable DASH in BIOS 23
- Enable DASH in the Operating System (OS) . . 24

Chapter 4. CRU replacement 25

Before CRU replacement 25
- What is CRU 25
- CRU list 25
- System board illustration 28
- Prerequisites for hardware replacement . . . 30

ThinkStation logo badge 31
Computer ID badge 31
Top cover 32
Wi-Fi antenna cover 33
Keys for side cover and M.2 SSD storage box . . . 34
Side cover 35
Power supply assembly 38
Storage drives 38
- Optional internal storage drive cage 39
- HDD in optional internal storage drive cage . . 39
- HDD in the internal storage drive cage 40
- U.2 or U.3 SSD in the internal storage drive cage 41
- M.2 SSD bracket in internal storage drive cage 43
- Device in the front-access storage bay 44
- M.2 SSD storage box in NVMe storage tray . . 45
- M.2 SSD in M.2 SSD storage box 46
- On-board M.2 SSD 47
- On-board M.2 SSD holder 50
- M.2 SSD in a PCIe adapter 51
- U.2 or U.3 SSD in a PCIe adapter 55

PCIe cards 57
- NVLINK retainer 57
- NVLINK bridge 58
- Super capacitor module 58
- PCIe card bracket 59
- Half-length PCIe card 60
- Full-length PCIe card 61
- PCIe card installation rule 64
- Cable connection 65

Fans 67
- Front fan 67
- Rear fan 67
- Upper PCIe fan 68
- Lower PCIe fan and internal storage drive fan 69
- Front-access storage fan 69
- Memory fan and air duct 70
- Top-venting thermal fan 70

Top-venting air duct 71
Memory module 72
Front panel I/O assembly 73
ThinkStation LED and holder 74
Internal speaker 75

Chapter 5. Help and support 76

Find your serial number 76
Lenovo diagnostic tools 76
Call Lenovo 76
- Before you contact Lenovo 76
- Lenovo Customer Support Center 77

Self-help resources 77

© Copyright Lenovo 2026

Purchase accessories or additional services . . . 78
Accessibility features. 78
Certification-related information 78
Compliance information 78
Supplemental information about the Ubuntu operating system 78

Appendix A. Important notice for Quebec consumers 81

Appendix B. Notice for USB connector name update 82

Appendix C. Notices and trademarks 83

Discover your Lenovo computer

Thank you for choosing a Lenovo® computer! We are dedicated to delivering the best solution to you.

Before starting your tour, please read the following information:

- Illustrations in this documentation might look different from your product.
- Depending on the model, some optional accessories, features, software programs, and user interface instructions might not be applicable to your computer.
- Documentation content is subject to change without notice. Lenovo makes constant improvements to the documentation of your computer, including this *User Guide*. To get the latest documentation, go to:
  - For computers purchased in mainland China: https://iknow.lenovo.com.cn
  - For computers purchased outside mainland China: https://support.lenovo.com/documentation

© Copyright Lenovo 2026

Chapter 1. Overview

Front

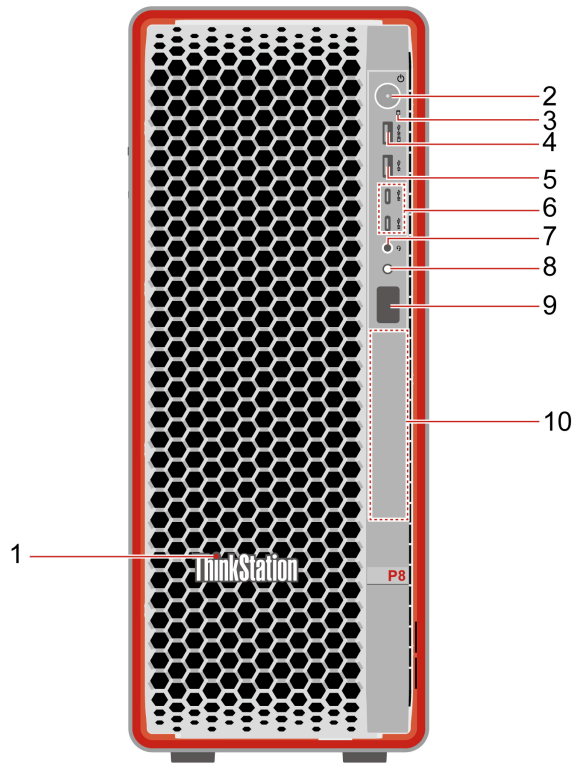

Item	Description	Item	Description
1	ThinkStation® LED	2	Power button with indicator
3	Storage indicator	4	USB-A connector (USB 10Gbps, Always On USB)*
5	USB-A connector (USB 10Gbps)*	6	USB-C® connectors (USB 10Gbps)*
7	Headset connector	8	Diagnostic panel button
9	Diagnostic panel	10	Front-access storage bay

* for selected models

Note: For more information about the USB connector name update, see Appendix B “Notice for USB connector name update” on page 82.

Statement on USB transfer rate

Depending on many factors such as the processing capability of the host and peripheral devices, file attributes, and other factors related to system configuration and operating environments, the actual transfer rate using the various USB connectors on this device will vary and will be slower than the data rate listed in the connector name or below for each corresponding device.

© Copyright Lenovo 2026

USB device	Data rate (Gbit/s)
Thunderbolt™ 3	40
Thunderbolt 4	40

Power indicator

Show the system status of your computer.

- **On:** The computer is starting up or working.
- **Off:** The computer is off or in hibernation mode.
- **Blinking slowly:** The computer is in sleep mode.

Storage indicator

The storage indicator blinks when a storage drive is under reading or writing.

Always On USB feature

A USB connector with a battery icon supports the Always On USB feature. With the Always On USB feature enabled, the connector can charge a USB-compatible device when the computer is in sleep mode (S3), in hibernate mode (S4), or even off (S5).

To enable the Always On USB feature, do the following:

1. Turn on or restart the computer. When the logo screen is displayed, press F1 or Fn+F1 to enter the UEFI BIOS menu.
2. Click **Devices → USB Setup → USB Charging Port in S4/S5** to enable the Always On USB feature.

Diagnostic panel and diagnostic panel button

On supported models, the diagnostic panel and its control button interface with the ThinkStation Diagnostics application to enable real-time hardware monitoring. The system automatically detects faults and displays corresponding error codes on the panel.

Computer status	Diagnostic panel behavior	Diagnostic panel button function
No event	Off by default.	**Short press:** Turn on or turn off the diagnostic panel. The date and time will be displayed on the panel when it is turned on. The panel will turn off automatically if idle for three minutes.
Single event occurs	An error code and a QR code are automatically displayed.	**Long press (about 3 seconds):** Clear the event.
Multiple events occur	A list of error codes is automatically displayed.	**Short press:** Select an error event and check the corresponding QR code of the selected event. **Long press (about 3 seconds):** Clear the selected event.

To decode the error code, scan the QR code or go to https://www.thinkworkstationsoftware.com/?view=codes.

The diagnostic panel behavior can be changed in the UEFI BIOS as follows.

1. Turn on or restart the computer. When the logo screen is displayed, press F1 or Fn+F1 to enter the UEFI BIOS menu.
2. Go to **Advanced → Diagnostics**. Choose to show only the Diagnostic Error Code or both it and the BIOS POST Code. Adjust other settings if needed.

Front-access storage bay

Depending on your computer model, one of the following devices is installed in the front-access storage bay.

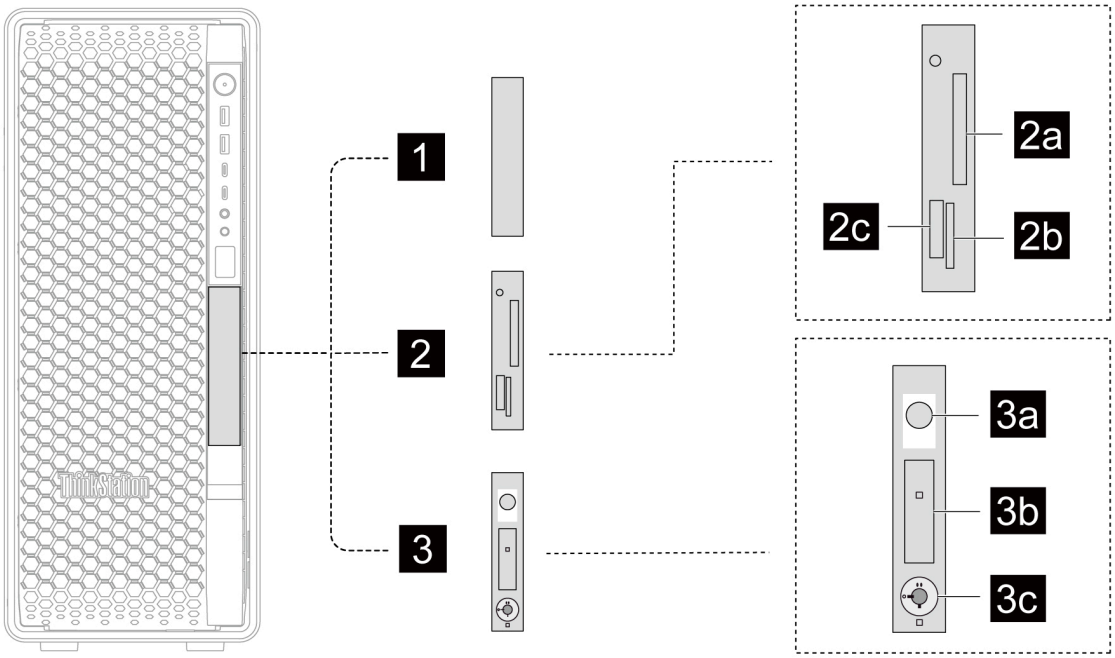

Name	Description
1 Blank bezel*	A dummy storage tray.
2 Media card reader*	The media card reader with three card slots supports the following types of cards. • 2a: CompactFlash™ Type I, CompactFlash™ Type II, Microdrive • 2b: SD™(Secure Digital), SDHC™(SD High Capacity), SDXC™(SD Extended Capacity), SD UHS-II (SD Ultra High Speed II), MultiMediaCard™ • 2c: Memory Stick™, Memory Stick Duo™, Memory Stick PRO™, Memory Stick PRO Duo™, Memory Stick PRO-HG Duo™, Memory Stick XC Duo, Memory Stick XC-HG Duo **Note:** Some models equipped with a media card reader may not support Memory Stick PRO-HG Duo or Memory Stick XC-HG cards.
3 NVMe storage tray*	The NVMe storage tray consists of the following parts. • 3a Eject button of M.2 SSD (solid-state drive) storage box • 3b M.2 SSD storage box • 3c Lock for M.2 SSD storage box **Note:** The M.2 SSD storage box is hot-swappable when NVMe RAID mode is disabled and the operating system of your computer does not reside on the M.2 SSD inside.

* for selected models

Related topics

- “USB specifications” on page 7

- “Use physical locks” on page 13
- “Use ThinkStation diagnostic tool” on page

Left

- Type-1

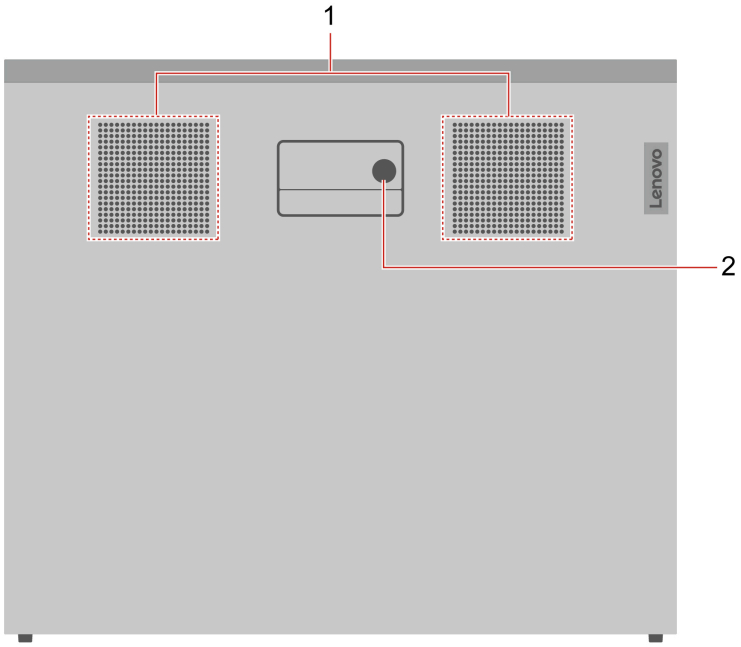

- Type-2

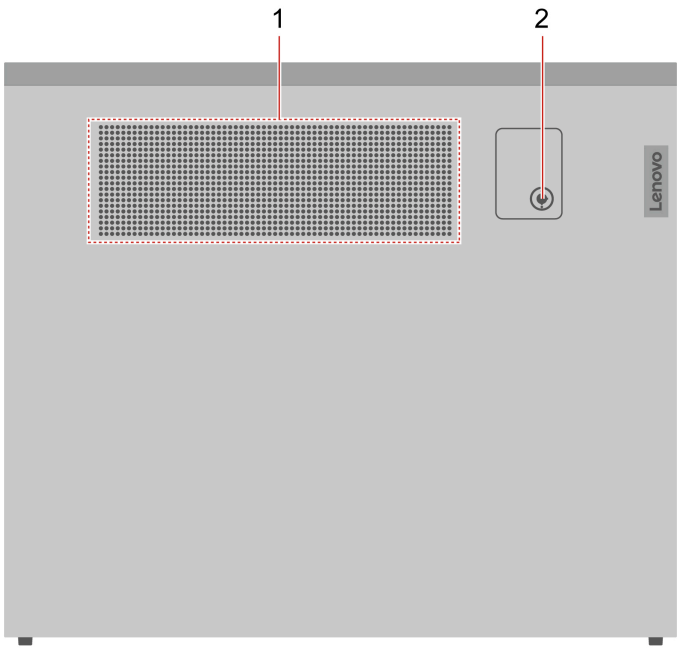

Item	Description	Item	Description
1	Side air vents*	2	Lock for side cover*

* for selected models

Side ventilation notice

Pay attention to the following ventilation requirements when using your computer.

- To ensure heat dissipation, do not block air vents or place any objects within 4.5 cm (1.8 inches) or 1 rack unit from the left side cover.
- For rack-mounted systems, a rack spacer is recommended in the gap above the system.
- Do not install internal-exhausting graphics cards (such as GeForce RTX 40X0) on systems without side ventilation on the left side cover.

Related topics

“Use physical locks” on page 13

Top

- Type-1



- Type-2

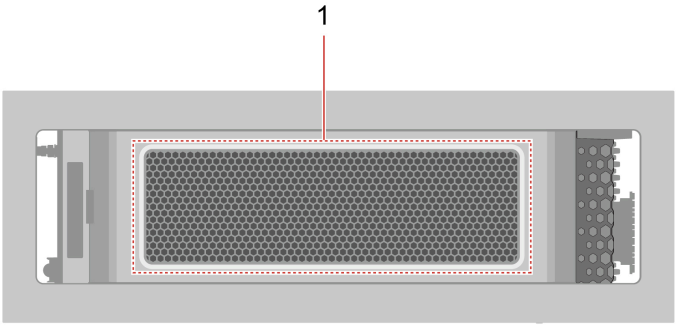

Item	Description
1	Top air vents*

* for selected models

Rear

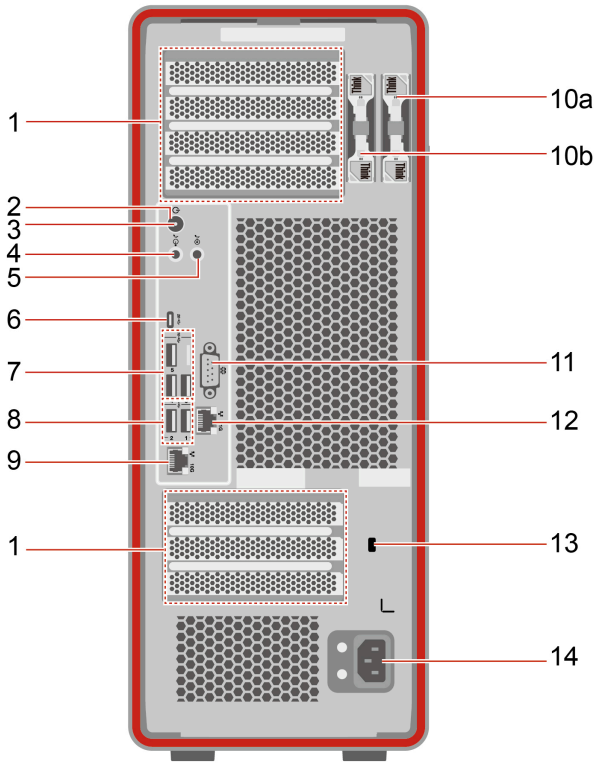

Item	Description	Item	Description
1	PCIe card areas	2	Power button
3	Power indicator	4	Audio line-out connector
5	Audio line-in connector	6	USB-C connector (USB 20Gbps)
7	USB-A connectors (USB 10Gbps)	8	USB-A connectors (Hi-Speed USB)
9	Ethernet connector (10G)	10a	Key-nest for side cover
10b	Key-nest for M.2 SSD storage box	11	Serial connector*
12	Ethernet connector (1G)	13	Security-lock slot
14	Power cord connector		

* for selected models

Serial connector

Connect an external modem, a serial printer, or other devices that use a serial connector.

PCIe card areas

The video output connectors in PCIe areas might be HDMI™ connectors, DisplayPort™ connectors, or Mini DisplayPort™connectors.

Related topics

- “USB specifications” on page 7
- “Connect to external displays” on page 11
- “Use physical locks” on page 13

USB specifications

Note: Depending on the model, some USB connectors might not be available on your computer.

Connector name	Description
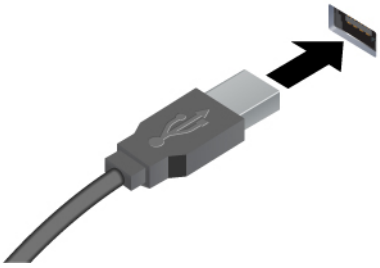 • USB-A connector (Hi-Speed USB) • 10 USB-A connector (USB 10Gbps)	Connect USB-A compatible devices, such as a USB-A keyboard, USB-A mouse, USB-A storage device, or USB-A printer.
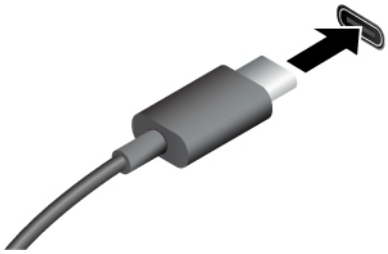 • 10 USB-C connector (USB 10Gbps) • 20 USB-C connector (USB4 20Gbps)	• Charge USB-C compatible devices with the output voltage and current of 5 V and 3 A. • • Connect to USB-C accessories to help expand your computer functionality. To purchase USB-C accessories, go to https://www.lenovo.com/accessories.

Platform specifications

Specification	Description
Dimensions	• Width: 175 mm (7 inches) • Height (with feet): 441 mm (18 inches) • Depth: 508 mm (20 inches)
Weight (without packaging)	Maximum configuration as shipped: 23 kg (51 lb)

Specification	Description
Hardware configuration	• For Ubuntu 22.04: 1. Open the system menu from the top-right corner and click **Settings**. 2. Click **About**. • For Ubuntu 24.04: 1. Open the system menu from the top-right corner and click ⚙. 2. Click **System → About**.
Power supply	• 1000-watt 92% power supply • 1400-watt 92% power supply
Electrical input	• Input voltage: From 100 V ac to 240 V ac • Input frequency: 50/60 Hz
Microprocessor	• For Ubuntu 22.04: To view the microprocessor information of your computer, enter **Settings** and click **About**. • For Ubuntu 24.04: To view the CPU information of your computer: 1. Open the system menu from the top-right corner and click ⚙. 2. Click **System → About**.
Memory module	• Supported memory module quantity: 1, 2, 4, 6, or 8 • Supported memory module type: – DDR5-4800 (double data rate 5 at 4800 MT/s) ECC (error correction code) RDIMM (registered dual inline memory module) (16 GB, 32 GB, or 64 GB) – DDR5-4800 ECC 3DS (3D stacking) RDIMM (128 GB) – DDR5-5600 ECC RDIMM (16 GB, 32 GB, or 64 GB) – DDR5-6400 ECC RDIMM (16 GB, 32 GB, 64 GB, or 128 GB) **Note:** See “System memory speed” on page 9 for more details.
Storage device	• 3.5-inch HDD (hard disk drive)* • M.2 SSD (solid-state drive)* • U.2 or U.3 SSD* **Note:** Type `Disks` in the search box and use the **Disks** application to view the storage drive capacity of your computer. The storage drive capacity indicated by the system is less than the nominal capacity.
Video features	• Four PCIe x16 slots on the system board for installing graphics cards • Up to 16 external displays can be connected when four four-port graphics cards are installed

Specification	Description
Expansion	• Internal storage drive cages* • Optional internal storage drive cage* • On-board M.2 SSD slots • PCIe slots • Memory slots • Front-access storage bay* **Note:** For detailed expansion rules, see “Expansion modules” on page 18.
Network features	• Bluetooth* • Ethernet LAN • Wireless LAN*

* for selected models

Operating environment

- Maximum altitude (without pressurization):
  - Operating: From 0 m (0 ft) to 3048 m (10 000 ft)
  - Storage: From 0 m (0 ft) to 12192 m (40 000 ft)
- Temperature:
  - Operating: From 10 °C (50 °F) to 35 °C (95 °F)
  - Storage: From -40 °C (-40 °F) to 60 °C (140 °F)
- Relative humidity:
  - Operating: 20%-80% (non-condensing)
  - Storage: 10%-90% (non-condensing)

System memory speed

Your computer can come with the following types of memory modules and will run up to the following speed:

Memory module type	Memory module speed
DDR5-4800 ECC RDIMM / DDR5-4800 ECC 3DS RDIMM	4800 MT/s
DDR5-5600 ECC RDIMM	5600 MT/s
DDR5-6400 ECC RDIMM	6400 MT/s

To avoid unexpected frequency reduction, ensure that you install memory modules in a right way:

- Installed memory module quantity: 1 pc, 2 pcs, 4 pcs, 6 pcs, or 8 pcs
- Install memory modules of the same type, the same capacity, and the same DRAM densities.
- Install memory modules in the order shown in the following illustration.

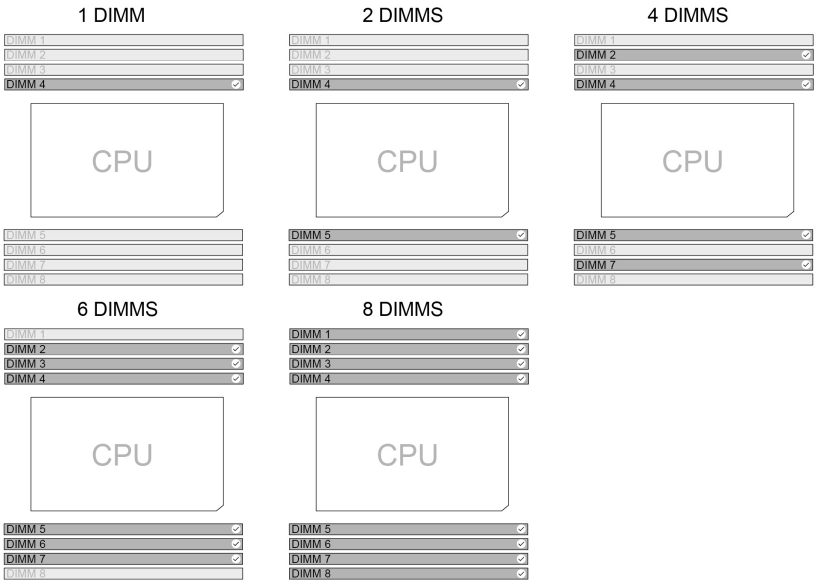

Notes:

- The actual system memory speed depends on the microprocessor model. For example, your computer comes with 4800 MT/s memory modules, but the microprocessor only supports up to 4400 MT/s memory modules. Then the system memory speed will be no faster than 4400 MT/s. For microprocessor models supported in your computer, contact the Lenovo Customer Support Center.
- If you install memory modules of different speed, the actual system memory speeds will be set to the lowest speed of all the memory modules.

Chapter 2. Get started

Initial setup

Ensure to follow the ventilation requirements in “Side ventilation notice” on page 5.

Step 1. Connect the cables of external displays and other necessary devices to appropriate connectors on the computer.

Step 2. Connect the power cord to the power cord connector on the computer and then connect it to a properly-grounded electrical outlet.

Step 3. Press the power button to turn on the computer.

Step 4. Follow the on-screen instructions to complete the setup procedures.

Step 5. Connect to a wired or wireless network.

- Wired network: Connect Ethernet cable of local network to the Ethernet connector on the computer.

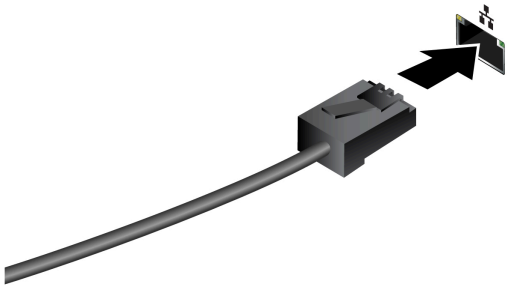

- Wireless network: If your computer includes a wireless LAN module, you can connect your computer to Wi-Fi®networks.
  - For Ubuntu 22.04:
    1. Open the system menu from the top-right corner and expand the Wi-Fi section of the menu.
    2. Click **Select Network**. A list of available wireless networks is displayed.
    3. Select a network available for connection. Provide required information, if needed.
  - For Ubuntu 24.04:
    1. Open the system menu from the top-right corner and turn on the Wi-Fi by clicking **Wi-Fi** button.
    2. Click **>** to expand the Wi-Fi section of the menu. A list of available wireless networks is displayed. Click **All Networks** to see extra options.
    3. Select an available network for connection. Provide required information if needed.

Connect to external displays

Your computer has four PCIe x16 slots for installing graphics cards. You can connect to up to 16 wired displays when four four-port graphics cards are installed.

Before you start, configure graphics cards if necessary.

- Ensure to install graphics cards into PCIe x16 slots and follow “PCIe card installation rule” on page 64.

© Copyright Lenovo 2026

- Installation requirements may vary by graphics card type. See graphics card documentation for details.

To connect to an external display, do the following.

1. Connect one end of the display cable or adapter to the HDMI, Mini DisplayPort, DisplayPort, or other video output connectors on your computer.
2. Connect the other end of the cable or adapter to the external display.

Rack-mounted chassis

Your computer offers flexibility for both desktop and data center environments. With an easy-to-attach sliding rail kit, you can install the computer into a rack. You can buy the rail kit from Lenovo. It will come with a guide to help you install your computer into a rack.

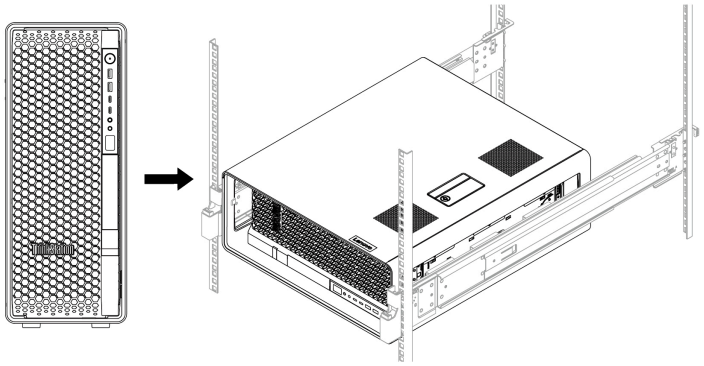

Get started with Ubuntu Desktop (22.04 LTS)

Learn the basics of Ubuntu and start working with it right away. For more information about Ubuntu, see the Ubuntu documentation site at: https://help.ubuntu.com/lts/ubuntu-help/index.html.

The Gnome desktop is installed by default and is designed to be simple and easy to use. Details on using Gnome are available by launching the Help application or online at https://help.gnome.org/.

Launch an app

- Press the Super key (with the Windows logo) or open the Activities menu on the top left and type in the name of the application you want to launch.
- Click the **Show Applications** button on the lower left, and select the application you want to launch.

Launch settings

Open the system menu from the top-right corner and click **Settings**.

Get started with Ubuntu Desktop (24.04 LTS)

Learn the basics of Ubuntu and start working with it right away. For more information about Ubuntu, see the Ubuntu documentation site at: https://help.ubuntu.com/lts/ubuntu-help/index.html.

The Gnome desktop is installed by default and is designed to be simple and easy to use. Details on using Gnome are available by launching the Help application or online at https://help.gnome.org/.

Launch an app

- Press the Super key (with the Windows logo) or open the Activities menu on the top left and type in the name of the application you want to launch.
- Click the **Show Apps** button on the lower left, and select the application you want to launch.

Launch settings

Open the system menu from the top-right corner and click ⚙.

Set the power plan

For ENERGY STAR® compliant computers, the following power plan takes effect when your computers have been idle for a specified duration:

- Turn off the display: After 5 minutes
- Put the computer to sleep: After 20 minutes

To awaken the computer from Sleep mode, press any key on your keyboard.

To set the power plan:

1. Go to **Settings → Power**.
2. Choose or customize a power plan of your preference.

Security solutions

Lenovo values your information security. Your computer can be secured by physical locks, software solutions, and BIOS solutions. They can protect your computer from harm, theft, or unauthorized use.

Use physical locks

You can secure your computer and information by the following physical locks.

Locks for side cover and M.2 SSD storage box

- **Function of locks**
  - Locks for side cover and M.2 SSD storage box prevent unauthorized access to the inside of your computer chassis or storage drive.
  - The M.2 SSD storage box(2) in the NVMe storage tray is hot-swappable when NVMe RAID mode is disabled and the operating system of your computer does not reside on the M.2 SSD inside. It means you can replace the M.2 SSD inside without even turning off your computer. Locking the M.2 SSD storage box can prevent unexpected removal.

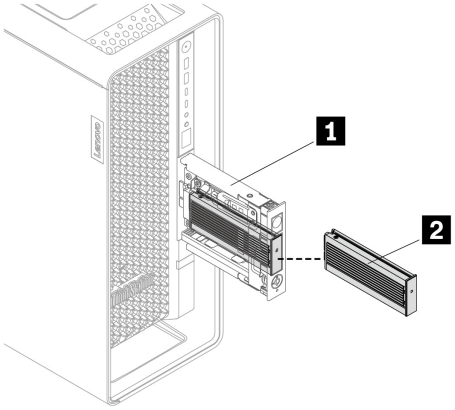

- **Keys to locks**
  - The keys are attached to the rear panel. For security, store the keys in a secure place when you are not using them.

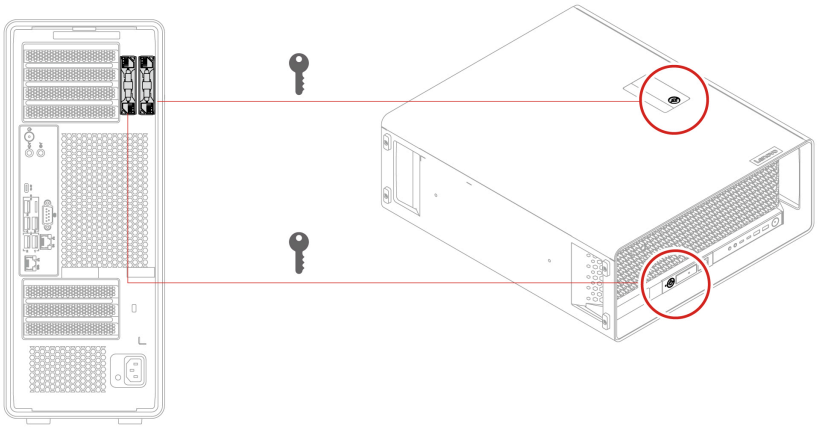

  - Keys carved with xx, such as **00**, **01**, **02**, or **03** can unlock the locks carved with the same numbers.
  - To unlock, turn the key clockwise to the position with a circle mark on the lock. To lock, turn the key counterclockwise.

Security lock

Lock your computer to a desk, table, or other fixtures through a security lock.

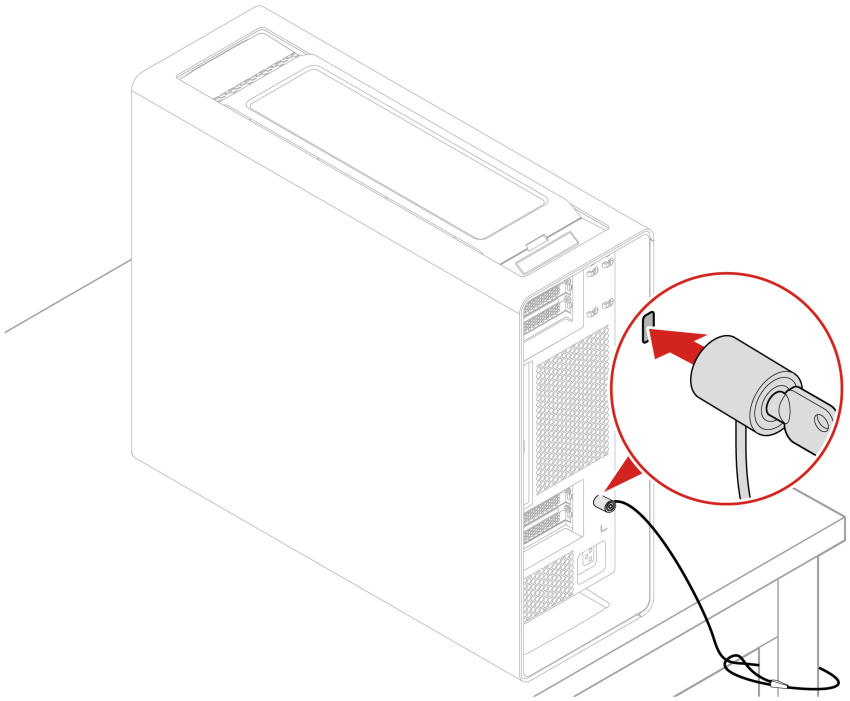

Note: You can purchase such a security lock from Lenovo if needed. But Lenovo makes no comments, judgments, or warranties about the function, quality, or performance of locking device produced by a third party.

Use BIOS security solutions

This section provides BIOS solutions to secure your computer and information.

Cover presence switch

The cover presence switch prevents the computer from logging in to the operating system when the computer cover is not properly installed or closed.

To enable or disable the cover presence switch on the system board:

1. Restart the computer. When the logo screen is displayed, press F1 or Fn+F1.
2. Select **Security → Cover Tamper Detected** and press Enter.
3. Select **Enabled** or **Disabled** and press Enter.
4. Press F10 or Fn+F10 to save the changes and exit.

If the cover presence switch is enabled and the computer cover is not correctly installed or closed, an error message will be displayed when you turn on the computer. To bypass the error message and log in to the operating system:

1. Properly install or close the computer cover.
2. Enter the BIOS menu, save and then exit.

Smart USB Protection

The Smart USB Protection function is a security function that helps prevent data from being copied from the computer to USB storage devices connected to the computer. You can set the Smart USB Protection function to one of the following modes:

- **Disabled** (default setting): You can use the USB storage devices without limitation.
- **Read Only**: You cannot copy data from the computer to the USB storage devices. However, you can access data on the USB storage devices.
- **No Access**: You cannot access the USB storage devices from the computer.

To configure the Smart USB Protection function:

1. Restart the computer. When the logo screen is displayed, press F1 or Fn+F1.
2. Select **Security → Smart USB Protection** and press Enter.
3. Select the desired setting and press Enter.
4. Press F10 or Fn+F10 to save the changes and exit.

Absolute Persistence (for computers with Windows operating system and purchased outside mainland China)

Absolute Persistence technology is embedded in BIOS. It detects changes that happen on the hardware, software, or the call-in location. It keeps you always knowing what condition the computer is in. To activate the technology, you have to purchase a subscription to Absolute.

Wipe user data before disposal or reuse

Before you recycle, dispose of, or reuse the computer, it is recommended that all user data stored on the system be removed. For detailed instructions, see https://support.lenovo.com/documentation/FS10189.

UEFI BIOS passwords

You can set passwords in UEFI (Unified Extensible Firmware Interface) BIOS (Basic Input/Output System) to strengthen the security of your computer.

Password types

You can set a power-on password, supervisor password, system management password, or hard disk password in UEFI BIOS to prevent unauthorized access to your computer. However, you are not prompted to enter any UEFI BIOS password when your computer resumes from sleep mode.

- Power-on password

  When a power-on password is set, you are prompted to enter a valid password each time the computer is turned on.

- Supervisor password

  Setting a supervisor password deters unauthorized users from changing configuration settings. If you are responsible for maintaining the configuration settings of several computers, you might want to set a supervisor password.

  When a supervisor password is set, you are prompted to enter a valid password each time you try to enter the BIOS menu.

  If both the power-on password and supervisor password are set, you can enter either password. However, you must use your supervisor password to change any configuration settings.

- Hard disk password (for selected models)

Setting a hard disk password prevents unauthorized access to the data on the storage drive. When a hard disk password is set, you are prompted to enter a valid password each time you try to access the storage drive.

Note: After you set a hard disk password, your data on the storage drive is protected even if the storage drive is removed from one computer and installed in another.

- System management password (for selected models)

  You can enable the system management password to have the same authority as the supervisor password to control security related features. To customize the authority of the system management password through the UEFI BIOS menu:

  1. Restart the computer. When the logo screen is displayed, press F1 or Fn+F1.
  2. Select **Security → System Management Password Access Control**.
  3. Follow the on-screen instructions.

  If you have set both the supervisor password and the system management password, the supervisor password overrides the system management password.

Set, change, and remove a password

Before you start, print these instructions.

1. Restart the computer. When the logo screen is displayed, press F1 or Fn+F1.
2. Select **Security**.
3. Depending on the password type, select **Set Supervisor Password**, **Set Power-On Password**, **Set System Management Password**, or **Hard Disk Password** and press Enter.
4. Follow the on-screen instructions to set, change, or remove a password.
5. Press F10 or Fn+F10 to save the changes and exit.

You should record your passwords and store them in a safe place. If you forget the passwords, contact a Lenovo-authorized service provider.

Note: If the hard disk password is forgotten, Lenovo cannot remove the password or recover data from the storage drive.

Chapter 3. Explore your computer

Expansion modules

You can enhance your computer capacity and performance by adding various devices to the expansion modules. The topic provides some details about the expansion modules available on this product.

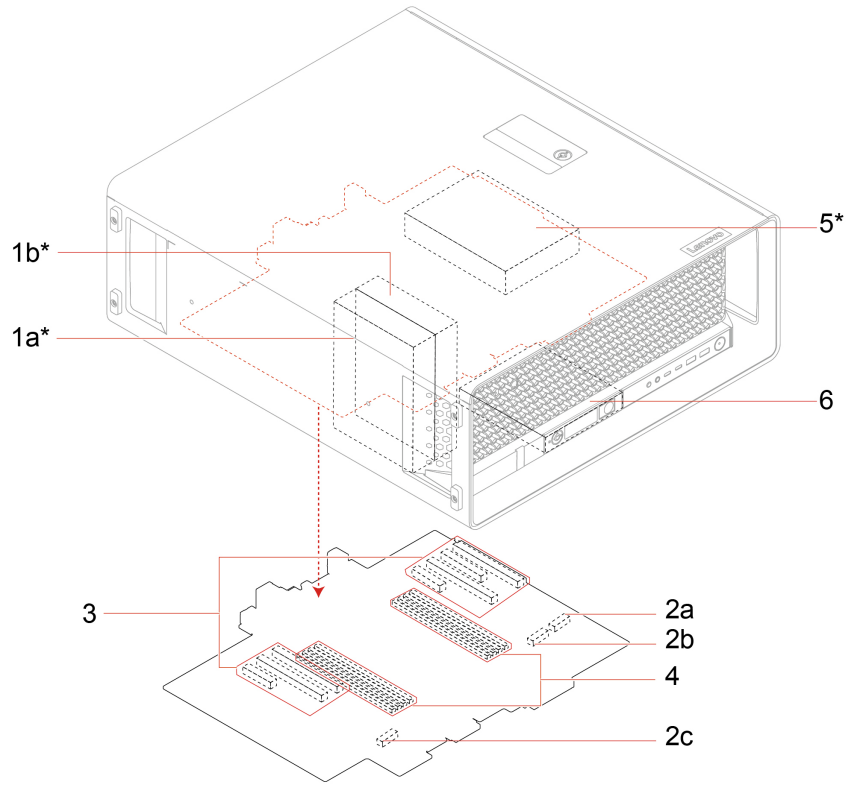

* for selected models

Location	Name	Description
1a, 1b	Internal storage drive cages*	• Each internal storage drive cage can support the following storage drives: – Up to one 3.5-inch HDD – Up to two M.2 SSD (Up to Gen 4) – Up to one U.2 or U.3 SSD (Up to Gen 5) • The storage drives installed in 1a and 1b should be the same. • Installation priority: 1a is the first and 1b is the second.
2a, 2b, 2c	On-board M.2 SSD slots	• Bus maximum generation: Gen 5 • Supported type: M.2 2280/22110 SSD **Note:** To install an M.2 22110 SSD, you need to buy a corresponding SSD heat sink kit from Lenovo. • Installation priority: 2a is the first, 2b is the second, and 2c is the third.

© Copyright Lenovo 2026

Location	Name	Description
3	PCIe slots	PCIe slot types and PCIe card installation priority are as follows. 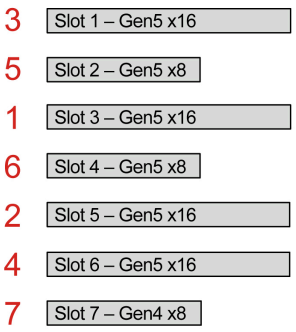 **Note:** See “PCIe card installation rule” on page 64 for more details.
4	Memory slots	• Supported memory module quantity: 1, 2, 4, 6, or 8 • Supported memory module type: – DDR5-4800 (double data rate 5 at 4800 MT/s) ECC (error correction code) RDIMM (registered dual inline memory module) (16 GB, 32 GB, or 64 GB) – DDR5-4800 ECC 3DS (3D stacking) RDIMM (128 GB) – DDR5-5600 ECC RDIMM (16 GB, 32 GB, or 64 GB) – DDR5-6400 ECC RDIMM (16 GB, 32 GB, 64 GB, or 128 GB) • Install memory modules of the same type, the same capacity, and the same DRAM densities. • Install memory modules in the order shown in the following illustration. 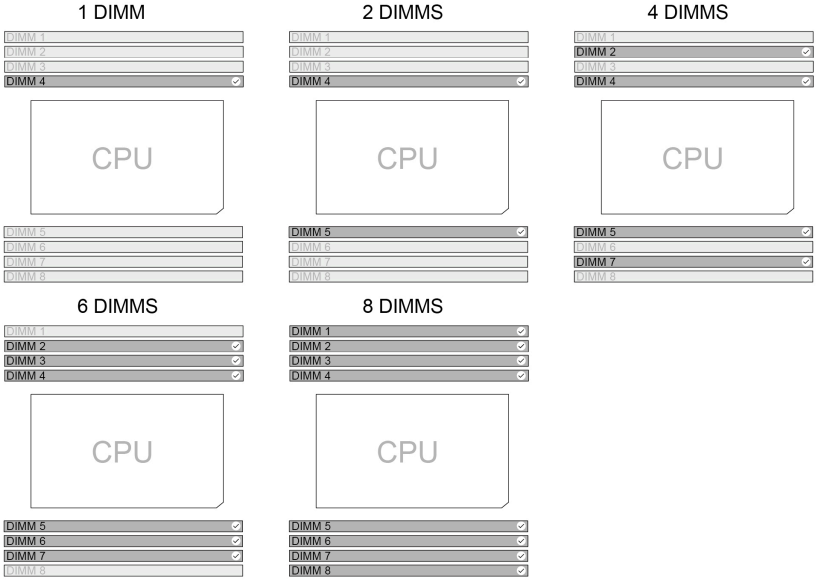

Location	Name	Description
5	Optional internal storage drive cage*	The optional internal storage drive cage can support a 3.5-inch HDD when: • 1a and 1b are both occupied with 3.5-inch HDDs, and • the computer is not installed with NVIDIA Quadro SYNC II, GeForce 40X0, GeForce 50X0, or RTX Pro 6000 BW graphics card.
6	Front-access storage bay	Depending on your computer model, one of the following devices can be installed in the front-access storage bay. • Blank bezel • Media card reader • NVMe storage tray (1) with an M.2 SSD storage box (2) inside: Support one M.2 SSD (Gen 4) 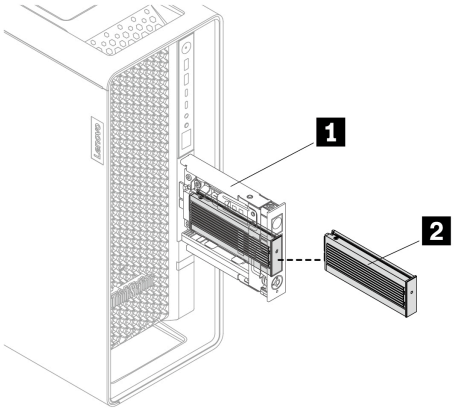 **Note:** The M.2 SSD storage box in the NVMe storage tray is hot-swappable when NVMe RAID mode is disabled and the operating system of your computer does not reside on the M.2 SSD inside.

Cooling system

The cooling system of your computer allows for unobstructed airflow. Illustrations and descriptions of the fans and heat sinks are as follows:

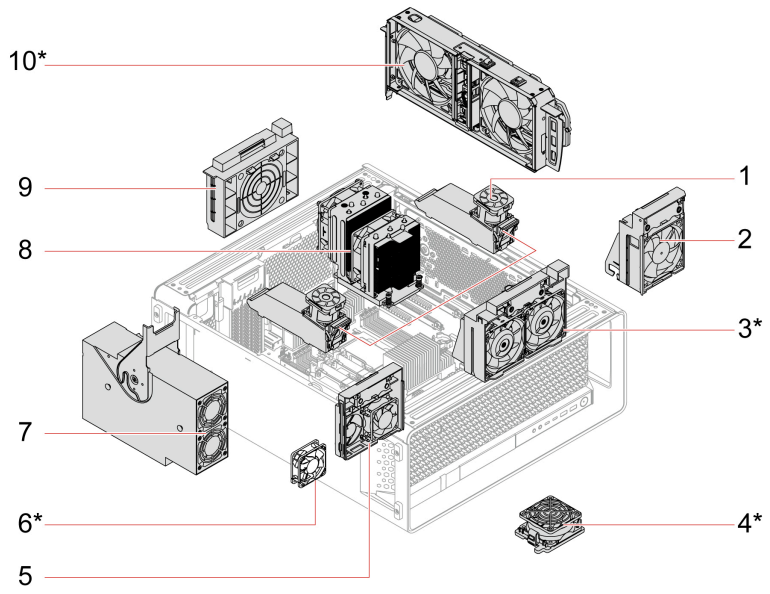

* for selected models

Item	Description	Item	Description
1	Memory fans and air ducts	2	Upper PCIe fan
3	Front fan*	4	Front-access storage fan*
5	Lower PCIe fan	6	Internal storage drive fan*
7	Power supply assembly fan	8	Microprocessor heat sink
9	Rear fan	10	Top-venting thermal fan*

Note: To replace the fans and heat sinks, see “Fans” on page 67.

UEFI BIOS

UEFI BIOS is the first program that the computer runs. When the computer turns on, the UEFI BIOS performs a self test to make sure that various devices in the computer are functioning properly.

Enter the UEFI BIOS menu

Turn on or restart the computer. When the logo screen is displayed, press F1 or Fn+F1 to enter the UEFI BIOS menu.

Note: If you have set UEFI BIOS passwords, enter the correct passwords when prompted. You also can select **No** or press Esc to skip the password prompt and enter the UEFI BIOS menu. However, you cannot change the system configurations that are protected by passwords.

Navigate the UEFI BIOS menu

Follow the on-screen instructions to navigate in the UEFI BIOS menu.

The table below introduces the available settings of the UEFI BIOS menu. You can follow the on-screen instruction to navigate in the UEFI BIOS menu.

Note: The UEFI BIOS menu might vary depending on system configurations.

Menu	Introduction
Main	This category provides the general product-related and firmware information including system summary, machine type, product serial number, UUID number, etc.
Devices	This category introduces how to configure various devices such as USB ports and audio controllers.
Advanced	This category provides advanced information about the computer such as the CPU features.
Power	This category introduces power and thermal management solutions.
Security	This category introduces various passwords, locks, and software to protect your computer.
Startup	This category introduces how to set the boot priority order.
Exit	This category introduces how to exit as you prefer.

You can go to Lenovo BIOS Simulator Center https://download.lenovo.com/bsco/index.html to explore the detailed settings by your product name.

Note: The Lenovo BIOS Simulator Center makes periodic updates of the settings. The UEFI BIOS simulator interface and description of settings might be different from that on your actual user interface.

Map UEFI BIOS USB ports to physical connectors

In the UEFI BIOS menu (**Devices → USB Setup**):

- **Front USB ports** follow the same top-to-bottom order as the connectors on the machine's front panel.
- **Rear USB ports** are numbered to match the connectors marked with the same numbers on the machine's rear panel.

Update UEFI BIOS

When you install a new program, device driver, or hardware component, you might need to update UEFI BIOS. You can update the BIOS from your operating system or a flash update disc (supported only on selected models).

Download and install the latest UEFI BIOS update package by one of the following methods:

- Using the built-in software update service:
  - For Ubuntu operating system, Ubuntu software update will check the LVFS site for any firmware updates and notify you when updates are available.
  - For IGEL operating system (for selected models), update, downgrade, or reinstall the UEFI BIOS using the IGEL Universal Management Suite (UMS). See Universal Firmware Update in the IGEL UMS.
- From the Lenovo Support Web site:
  1. Go to https://pcsupport.lenovo.com.
  2. Download the flash BIOS update driver for the operating system version or the ISO image version (used to create a flash update disc). Then, download the installation instructions for the flash BIOS update driver you have downloaded.
  3. Print the installation instructions and follow the instructions to update the BIOS.

ThinkStation DASH support

DASH (desktop and mobile architecture for system hardware) is a set of specifications developed by DMTF, which aims to provide open standards based web service management for desktop and mobile client systems.

Profile list

Profile	Requirement
Base Desktop and Mobile	Mandatory
Profile Registration	Mandatory
Role Based Authorization	Mandatory
Simple Identity Management	Mandatory
Boot Control	Optional
CPU	Optional
Indicators	Optional
Physical Asset	Optional
Power State Management	Optional
Sensors	Optional
Software Inventory	Optional
System Memory	Optional
BIOS Management	Optional
DHCP Client	Optional
DNS Client	Optional
Ethernet Port	Optional
Host LAN Network Port	Optional
IP Interface	Optional
OS Status	Optional
Software Update	Optional
Text Console Redirection	Optional
USB Redirection	Optional
Record Log	Optional
SSH	Optional
Computer system	Optional

Note: KVM Redirection supports remote management in OS only, not in BIOS setup.

Enable DASH in BIOS

Step 1. Turn on or restart the computer. When the logo screen is displayed, press F1 or Fn+F1 to enter the BIOS menu.

Step 2. Select **Advanced → DASH Configuration → DASH Support → Enabled** and press Enter.

Step 3. Press F10 to save and exit. Reboot the system to make the change take effect.

Step 4. Re-enter the BIOS menu.

Step 5. Configure DASH username and password as follows.

a. Go to **Devices → Realtek PCIe GBE Family Controller → RealManage Setup → RealManage Setup → Setup RealManage Configuration → Security Configuration**.

b. Modify the username and password.

c. Select **Save RealManage Configuration**.

d. Press F10 to save and exit. Reboot the system to make the change take effect.

Note: Some system may have an existing username and password by default. You can use the following account to login or modify DASH.

Username: `Administrator`

Password: `Password`

Enable DASH in the Operating System (OS)

Step 1. Go to https://www.pcsupport.lenovo.com/ and enter your product name in the search box.

Step 2. Select **Drivers & Software → Select Drivers**, and download tools as follows.

- **For Windows**:
  1. Go to **Networking: LAN (Ethernet)** and select a Realtek LAN Driver that fit your scenario for download.
  2. Return to the previous menu. Go to **Software and Utilities** and select a Client Tool that fit your scenario for download.
- **For Linux**:

  Go to **Networking: LAN (Ethernet)** and select the RTL8111EPP Linux Driver for download.

Step 3. Install the tools that you have downloaded.

Step 4. Configure the DASH user ID and password with the following command in OS.

DASHConfigRT -xf:*config.xml*

Notes:

- You can modify *config.xml* to the DASH user ID and password you need.
- Refer to the DASH configuration guide in your product package for more details.

Chapter 4. CRU replacement

Before CRU replacement

Before replacing the hardware of your computer, read this section first. You will get to know what CRU is, the CRU list, system board connectors, and prerequisites for CRU replacement.

What is CRU

Customer Replaceable Units (CRUs) are parts that can be replaced by the customer. Lenovo computers contain the following types of CRUs:

- **Self-service CRUs:** Refer to parts that can be replaced easily by customers themselves or by trained service technicians at an additional cost.
- **Optional-service CRUs:** Refer to parts that can be replaced by customers with a greater skill level. Trained service technicians can also provide service to replace the parts under the type of warranty designated for the customer's machine.

If you intend on installing the CRU, Lenovo will ship the CRU to you. CRU information and replacement instructions are shipped with your product and are available from Lenovo at any time upon request. You might be required to return the defective part that is replaced by the CRU. When return is required: (1) return instructions, a prepaid shipping label, and a container will be included with the replacement CRU; and (2) you might be charged for the replacement CRU if Lenovo does not receive the defective CRU within thirty (30) days of your receipt of the replacement CRU. For full details, see the Lenovo Limited Warranty documentation at:
https://www.lenovo.com/warranty/llw_02

CRU list

The following is the CRU list of your computer.

© Copyright Lenovo 2026

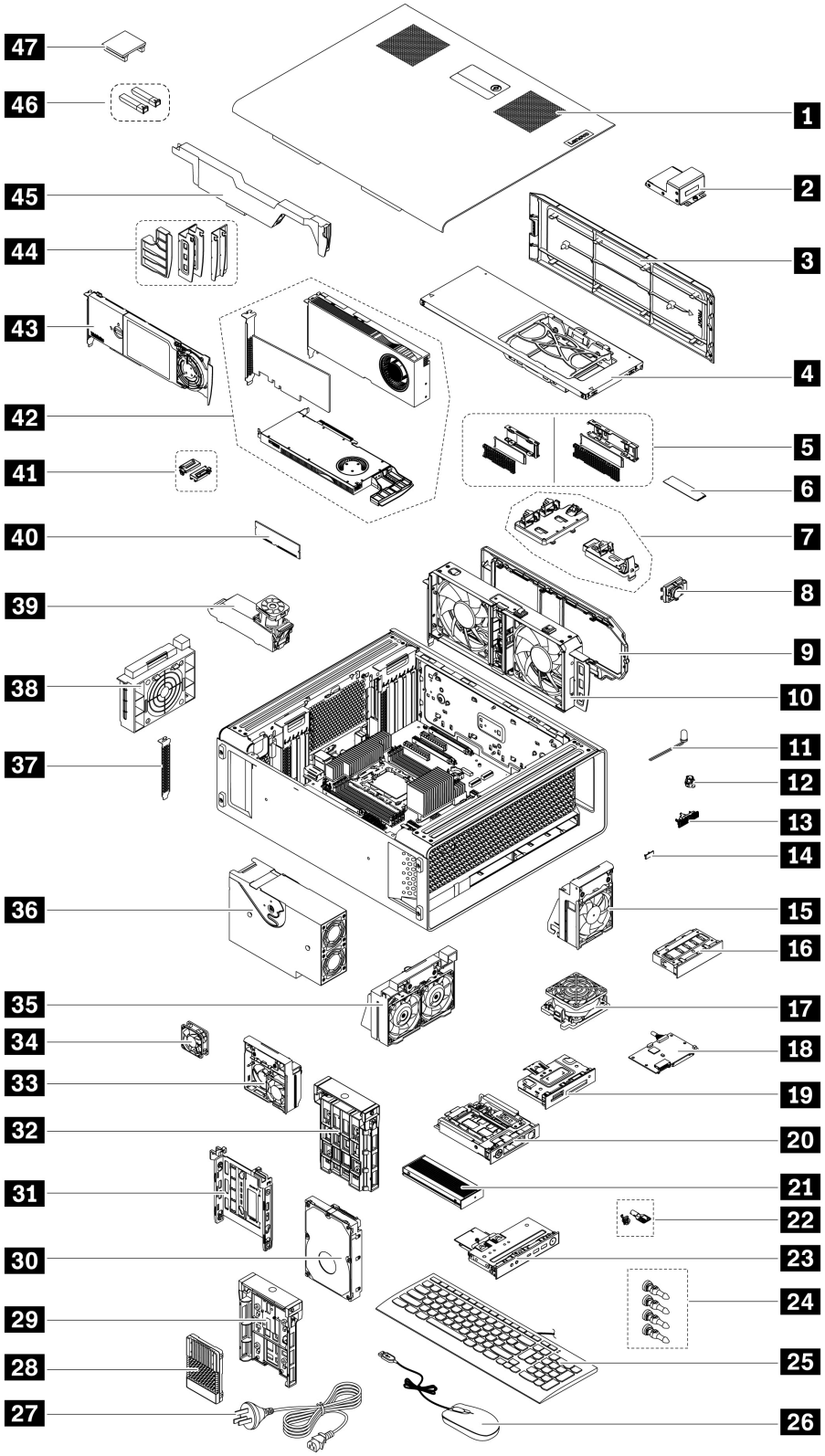
47
46
45
44
43
42
41
40
39
38
37
36
35
34
33
32
31
30
29
28
27
1
2
3
4
5
6
7
8
9
10
11
12
13
14
15
16
17
18
19
20
21
22
23
24
25
26

Number	Description	Self-service CRU	Optional-service CRU
1	Side cover	O	
2	NVLINK retainer*	O	
3	Top cover	O	
4	Optional internal storage drive cage*	O	
5	M.2 SSD heat sink kit	O	
6	M.2 SSD	O	
7	M.2 SSD holder	O	
8	Internal speaker		O
9	Top-venting air duct*	O	
10	Top-venting thermal fan*	O	
11	ThinkStation LED	O	
12	ThinkStation LED holder	O	
13	ThinkStation Logo badge	O	
14	Computer ID badge	O	
15	Upper PCIe fan	O	
16	Blank bezel*	O	
17	Front-access storage fan*	O	
18	PCBA of media card reader*		O
19	Media card reader*		O
20	NVMe storage tray*	O	
21	M.2 SSD storage box*	O	
22	Locks and keys for side cover and M.2 SSD storage box	O	
23	Front panel I/O assembly		O
24	Fan grommets*	O	
25	Keyboard*	O	
26	Mouse*	O	
27	Power cord*	O	
28	U.2 or U.3 SSD*	O	
29	U.2 or U.3 SSD bracket*	O	
30	HDD*	O	
31	HDD bracket*	O	
32	M.2 SSD bracket*	O	
33	Lower PCIe fan	O	
34	Internal storage drive fan*	O	
35	Front fan*	O	

Number	Description	Self-service CRU	Optional-service CRU
36	Power supply assembly	O	
37	PCIe bracket*	O	
38	Rear fan	O	
39	Memory fan and air duct	O	
40	Memory module	O	
41	Wi-Fi antenna cover*	O	
42	PCIe card*		O
43	M.2/U.2/U.3 SSD PCIe adapter*		O
44	Customized PCIe card extender*	O	
45	Super capacitor module*	O	
46	Fiber modules for NVIDIA ConnectX-6 Ethernet Adapter*		O
47	NVLINK bridge*		O

* for selected models

System board illustration

Note: The system board might look slightly different from the illustration.

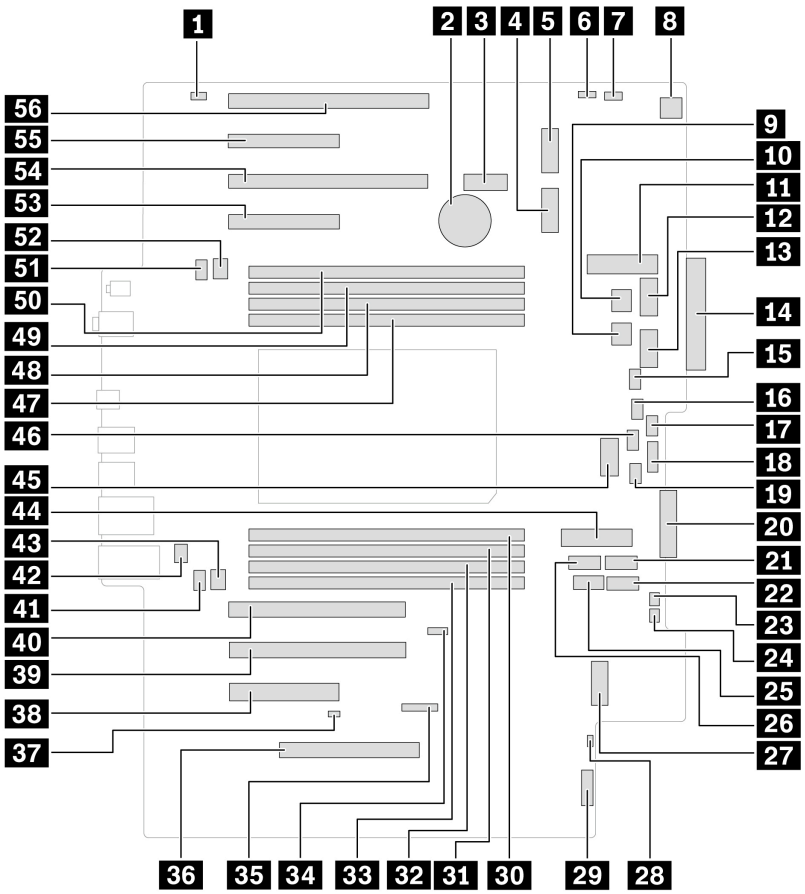

Item	Description	Item	Description
1	Internal speaker connector	2	Coin-cell battery
3	Wi-Fi socket	4	M.2 SSD slot 2
5	M.2 SSD slot 1	6	Clear CMOS hardware jumper
7	Cover presence switch (intrusion switch) connector	8	Upper PCIe (slot1–4) fan connector
9	Internal storage drive cage power connector 1	10	Internal storage drive cage power connector 2
11	Internal storage drive cage slot 1	12	Graphics card power connector 1
13	Graphics card power connector 3	14	Front-panel I/O connector
15	Front fan connector	16	Front-access storage fan connector
17	Internal storage drive fan connector	18	Internal USB-A 2.0 connector
19	CPU fan connector 1	20	Front-access storage bay connector
21	SATA 3 connector	22	SATA 2 connector
23	Flex I2C connector	24	ThinkStation LED connector
25	Internal USB-A 3.2 Gen 2 connector	26	SATA 1 connector
27	M.2 SSD slot 3	28	RAID LED cable connector
29	TCM connector	30	Memory slot 5 (DIMM 5)

Item	Description	Item	Description
31	Memory slot 6 (DIMM 6)	32	Memory slot 7 (DIMM 7)
33	Memory slot 8 (DIMM 8)	34	Clear CMOS and BBR (Boot Block Recovery) software jumper
35	BMC card connector	36	Power supply connector
37	USB4 power connector	38	PCIe slot 7 - Gen 4 x 8
39	PCIe slot 6 - Gen 5 x 16	40	PCIe slot 5 - Gen 5 x 16
41	CPU fan connector 2	42	Serial port (COM) connector
43	Memory fan 2 connector	44	Internal storage drive cage slot 2
45	Graphics card power connector 2	46	Lower PCIe (slot 5–7) fan connector
47	Memory slot 4 (DIMM 4)	48	Memory slot 3 (DIMM 3)
49	Memory slot 2 (DIMM 2)	50	Memory slot 1 (DIMM 1)
51	Memory fan 1 connector	52	Rear fan connector
53	PCIe slot 4 - Gen 5 x 8	54	PCIe slot 3 - Gen 5 x 16
55	PCIe slot 2 - Gen 5 x 8	56	PCIe slot 1 - Gen 5 x 16

Prerequisites for hardware replacement

General prerequisites

Read *Generic Safety and Compliance Notices*.

Prerequisites for opening computer cover

- 

  During operation, some components become hot enough to burn the skin. Before you open the computer cover, remove any media from the drives, turn off the computer and connected devices, disconnect power, remove all cables and locking devices, and wait approximately 10 minutes until the computer is cool.
- Before reaching parts with cables, record the cable routing for future reference and then disconnect its cable from the system board.

Prerequisites for storage drive replacement

Attention: The internal storage drive is sensitive. Inappropriate handling might cause damage and loss of data. When handling the internal storage drive, observe the following guidelines:

- Replace the internal storage drive only for repair. The internal storage drive is not designed for frequent changes or replacement.
- Before replacing the internal storage drive, make backup copy of all the data that you want to keep.
- Do not touch the contact edge of the internal storage drive. Otherwise, the internal storage drive might get damaged.
- Do not apply pressure to the internal storage drive.

- Do not make the internal storage drive subject to physical shocks or vibration. Put the internal storage drive on soft material, such as a cloth, to absorb physical shocks.

Prerequisites for hot-swappable M.2 SSD storage box replacement

For some computer models, an NVMe storage tray might be installed in the front-access storage bay. The M.2 SSD storage box(2) in the NVMe storage tray(1) can be hot-swappable, which means you can replace the M.2 SSD inside without even turning off your computer.

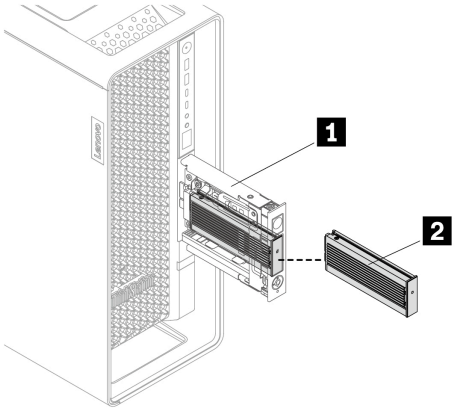

Attention: To avoid damage and loss of data, observe the following guidelines before replacing the hot-swappable M.2 SSD storage box:

- Ensure that NVMe RAID mode is disabled.
- Ensure that the operating system of your computer does not reside on the M.2 SSD inside the hot-swappable M.2 SSD storage box.
- Lock the M.2 SSD storage box to prevent unexpected removal. The keys are attached to the rear of the computer. For security, store the keys in a secure place.

ThinkStation logo badge

Before you start, ensure that you have read “Prerequisites for hardware replacement” on page 30.

Removal steps

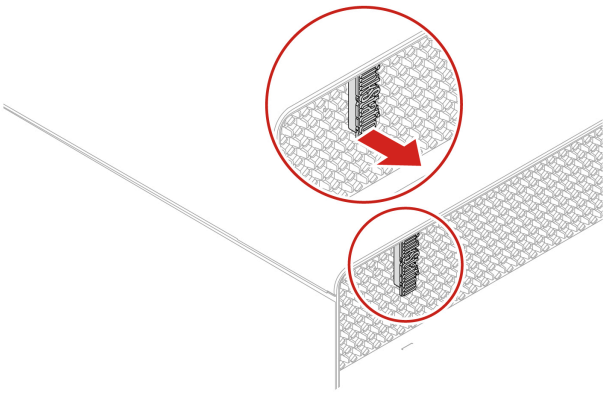

Computer ID badge

Before you start, ensure that you have read “Prerequisites for hardware replacement” on page 30.

Removal steps

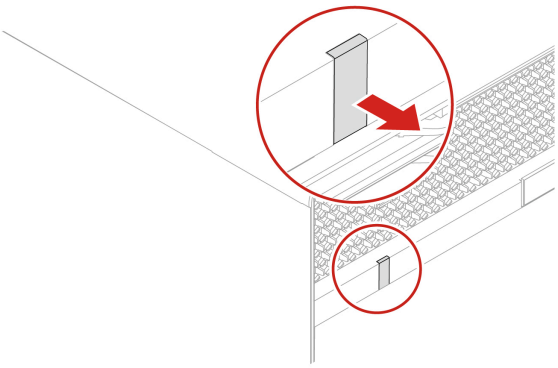

Top cover

Before you start, ensure that you have read “Prerequisites for hardware replacement” on page 30.

Removal steps

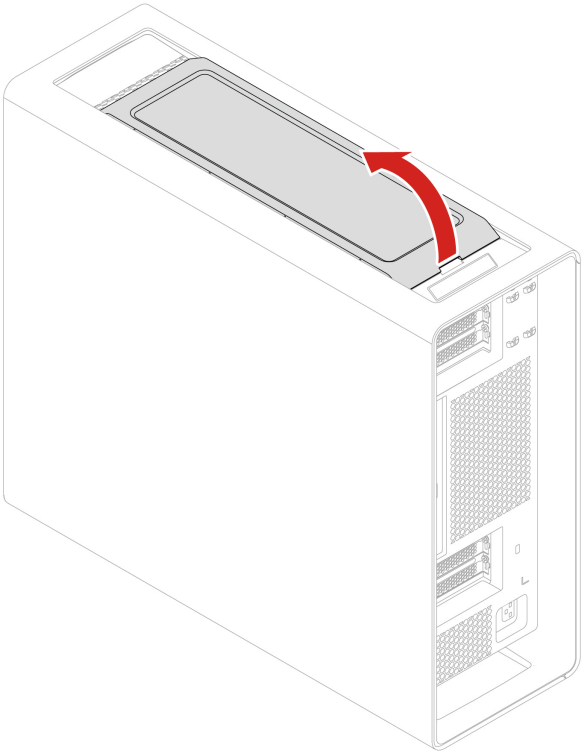

Installation steps

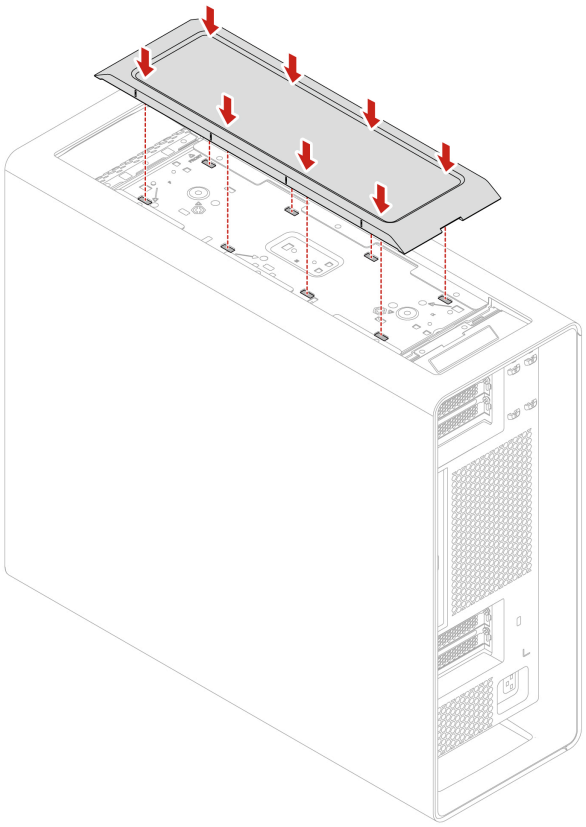

Wi-Fi antenna cover

Before you start, ensure that you have read “Prerequisites for hardware replacement” on page 30.

Removal steps

1. Remove the “Top cover” on page 32.
2. Remove the Wi-Fi antenna cover.

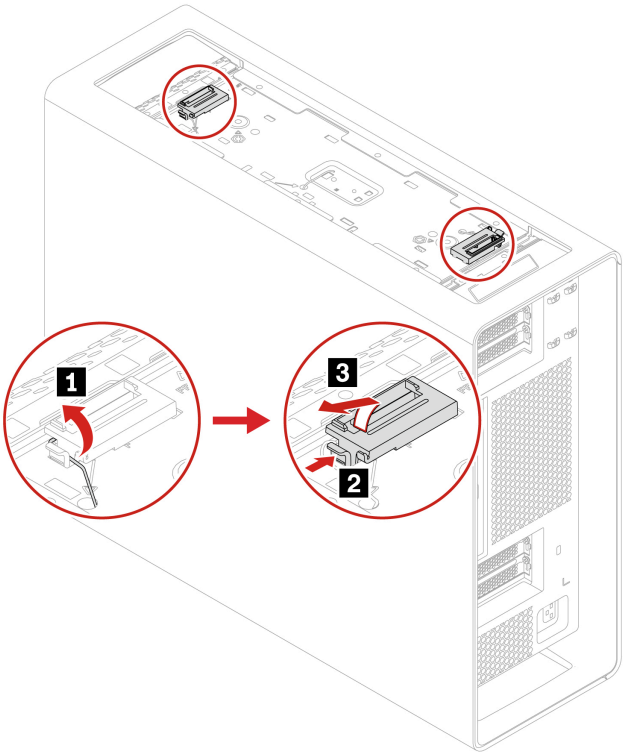

Keys for side cover and M.2 SSD storage box

Before you start, ensure that you have read “Prerequisites for hardware replacement” on page 30.

Removal steps

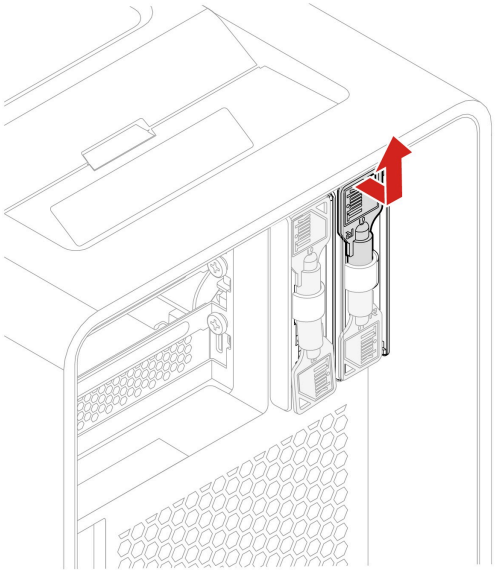

Side cover

Before you start, ensure that you have read “Prerequisites for hardware replacement” on page 30.

Removal steps

1. Lay the computer on its side for easier access to the side cover.
2. Remove the side cover.
   - Type-1

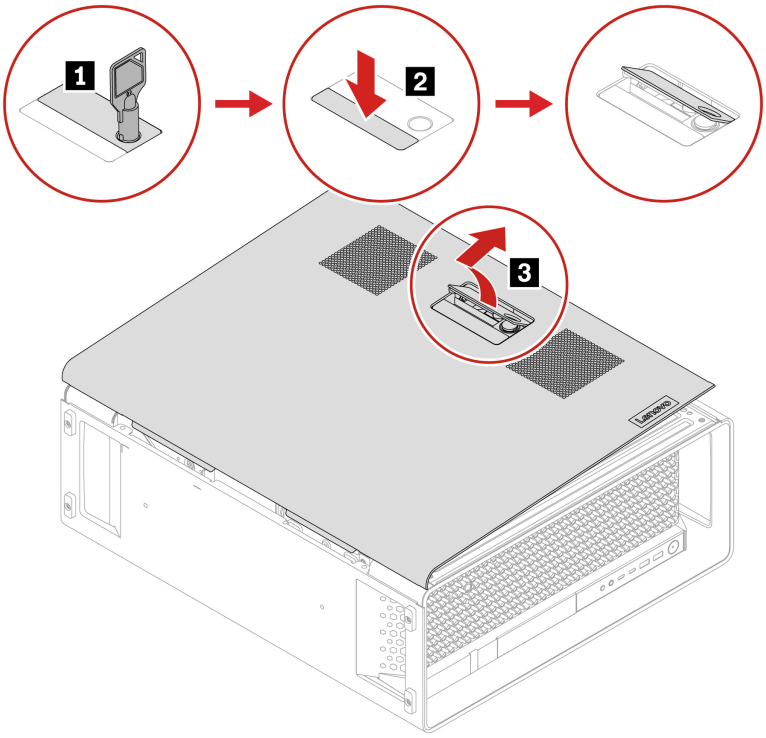

   - Type-2

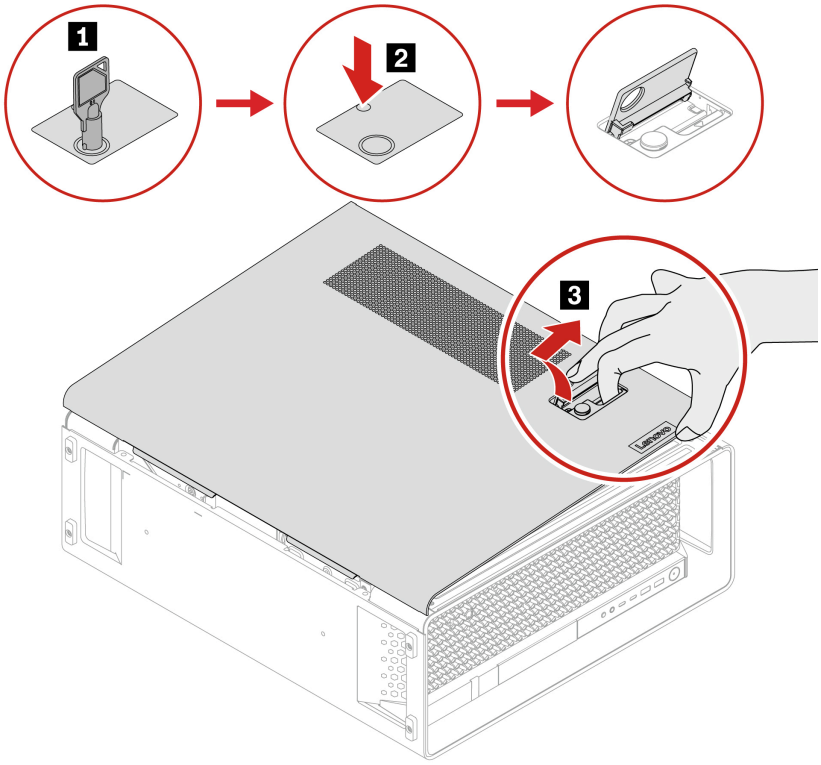

Notes:

- The lock for side cover and the unlocking step are for selected models.
- The key is attached at the rear of the computer. Keys carved with xx, such as 00, 01, 02, or 03 can unlock the locks carved with the same numbers.

Installation steps

- Type-1

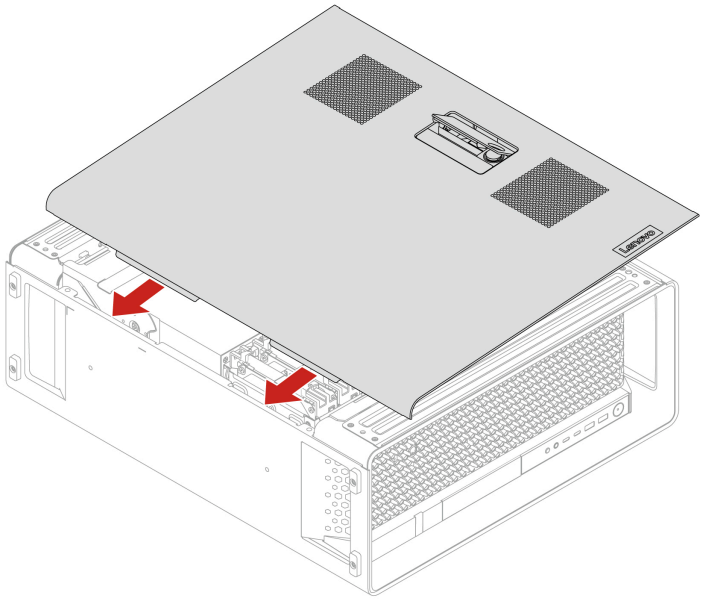

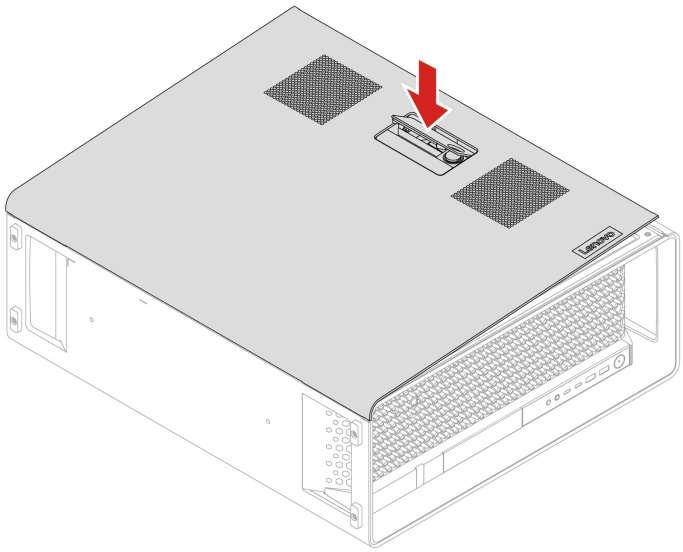

- Type-2

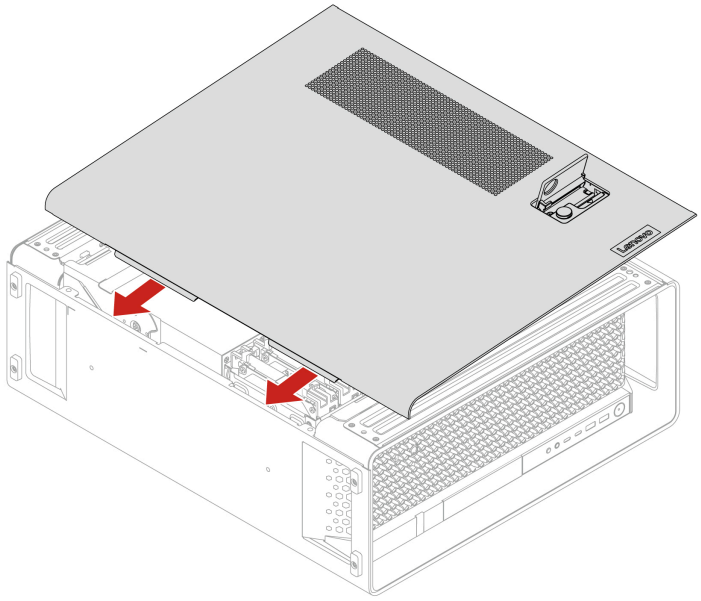

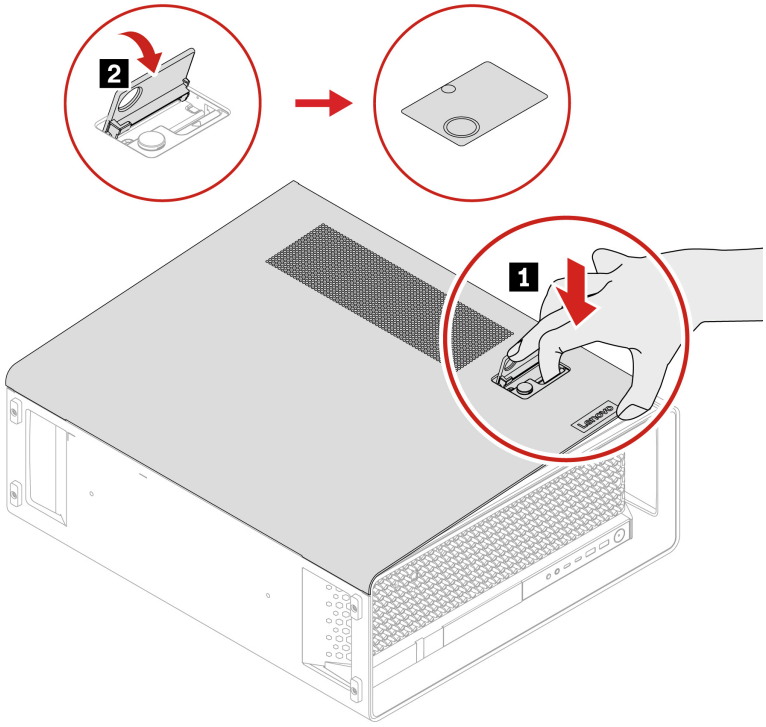

Power supply assembly

Before you start, ensure that you have read “Prerequisites for hardware replacement” on page 30.

Removal steps

1. Remove the “Side cover” on page 35.
2. Remove the power supply assembly.

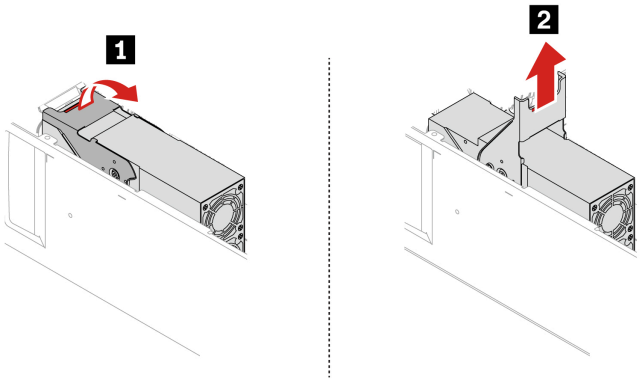

Storage drives

By reading this section, you will learn to replace storage drives in your computer. For their types, locations, and rules, see “Expansion modules” on page 18.

Optional internal storage drive cage

Before you start, ensure that you have read “Prerequisites for hardware replacement” on page 30.

Removal steps

1. Remove the “Side cover” on page 35.
2. Remove the optional internal storage drive cage.

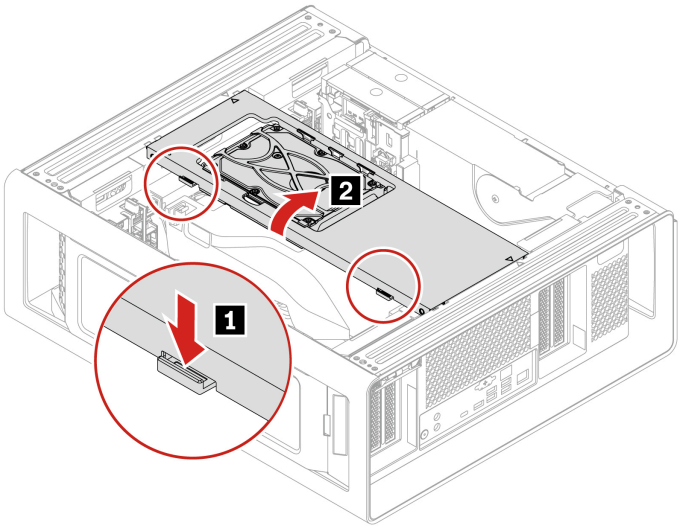

HDD in optional internal storage drive cage

Before you start, ensure that you have read “Prerequisites for hardware replacement” on page 30.

Removal steps

1. Remove the following parts, if any:
   a. “Side cover” on page 35
   b. “Optional internal storage drive cage” on page 39
2. Remove the HDD with its bracket from the optional internal storage drive cage.

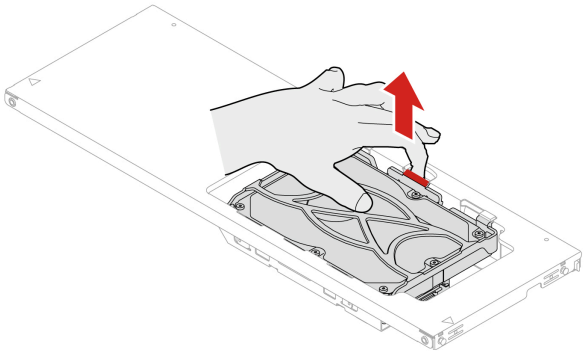

3. Remove the HDD from its bracket.

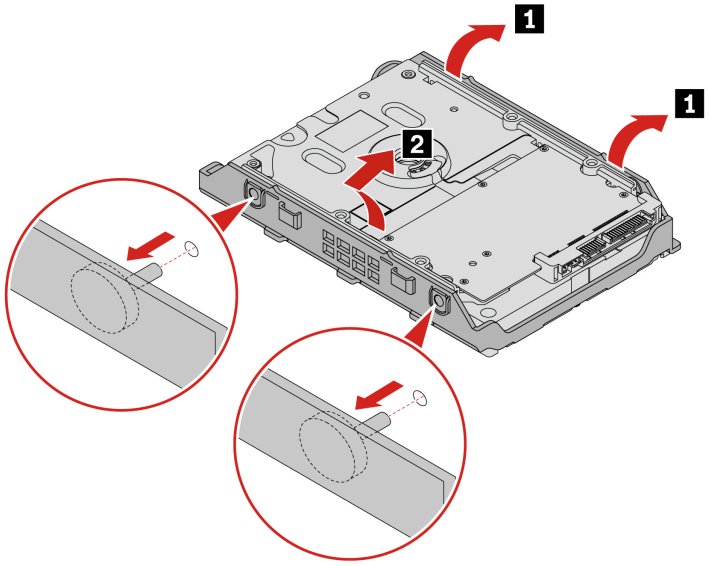

Note: When the computer is installed with NVIDIA Quadro SYNC II card or GeForce 40X0 graphics card, do not install 3.5-inch HDD in the optional internal storage drive cage.

HDD in the internal storage drive cage

Before you start, ensure that you have read “Prerequisites for hardware replacement” on page 30.

Removal steps

1. Remove the “Side cover” on page 35.
2. Remove the HDD with its bracket from the internal storage drive cage.

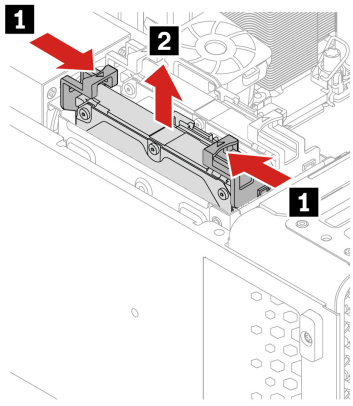

3. Remove the HDD from its bracket.

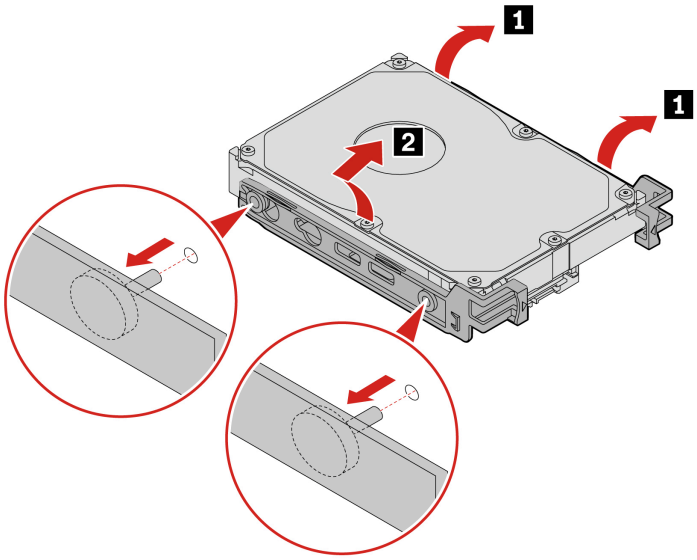

U.2 or U.3 SSD in the internal storage drive cage

Before you start, ensure that you have read “Prerequisites for hardware replacement” on page 30.

Removal steps

1. Remove the “Side cover” on page 35.
2. Remove the U.2 or U.3 SSD with its bracket from the internal storage drive cage.

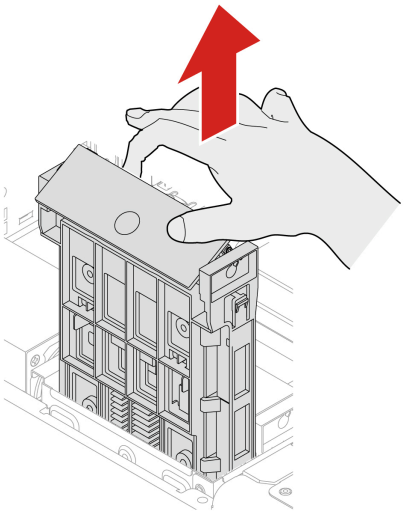

3. Remove the U.2 or U.3 SSD from its bracket.

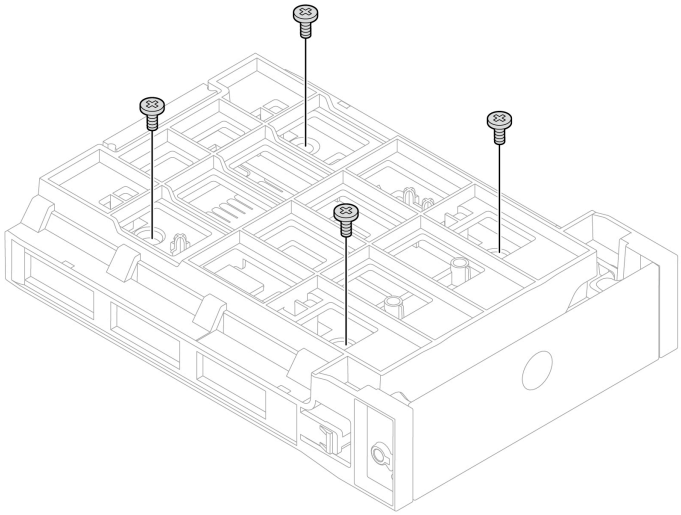

Screw specification	Quantity	Torque
M3 x 3.75 mm, Zn coated, black	4	5.0 ± 0.5 lb/in

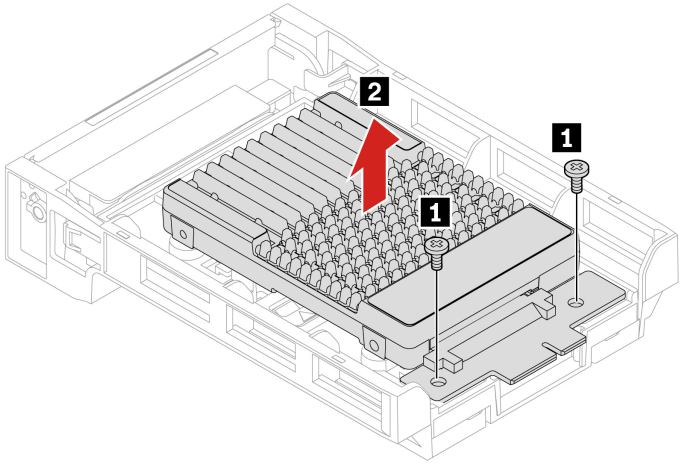

Screw specification	Quantity	Torque
M3 x 2 mm, Zn coated, blue	2	5.0 ± 0.5 lb/in

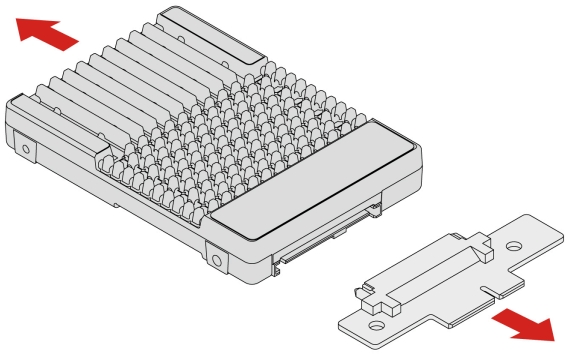

M.2 SSD bracket in internal storage drive cage

Before you start, ensure that you have read “Prerequisites for hardware replacement” on page 30.

Removal steps

1. Remove the “Side cover” on page 35.
2. Remove the M.2 SSD bracket from the chassis.

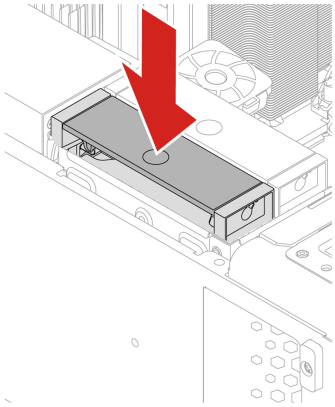

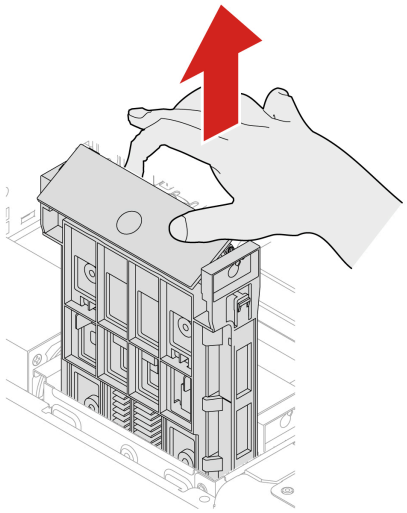

Device in the front-access storage bay

Before you start, ensure that you have read “Prerequisites for hardware replacement” on page 30.

Removal steps

1. Remove the following parts if any:
   a. “Side cover” on page 35
   b. “Optional internal storage drive cage” on page 39
   c. “Front fan” on page 67
   d. “Front-access storage fan” on page 69
2. Remove the device in the front-access storage bay, which can be an NVMe storage tray, a media card reader, or a blank bezel.
   - NVMe storage tray / media card reader:

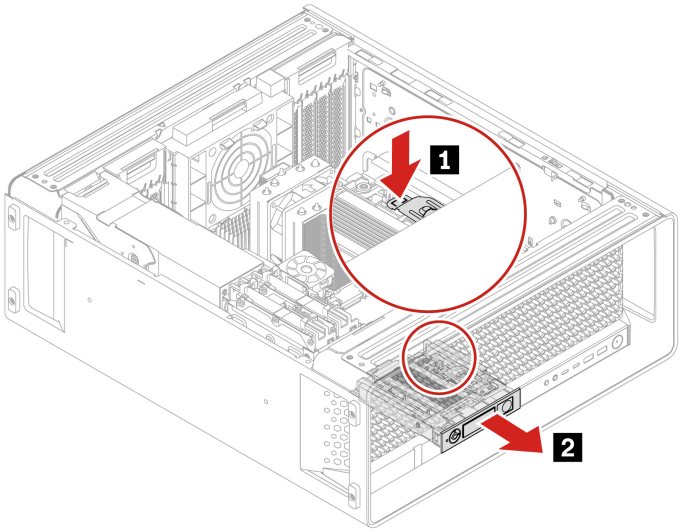

PCBA of media card reader:

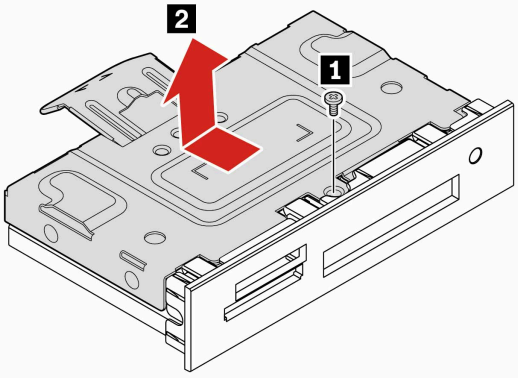

Screw specification	Quantity	Torque
M3 x 4 mm, Zn coated, blue	1	3.0 ± 0.5 lb/in

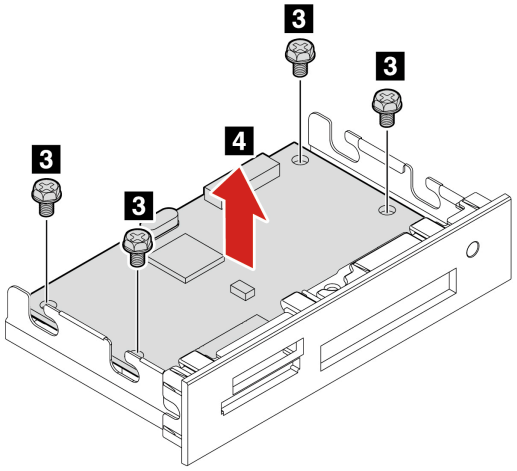

Screw specification	Quantity	Torque
M3 x 5 mm, Ni coated, black	4	5.0 ± 0.5 lb/in

- Blank bezel:

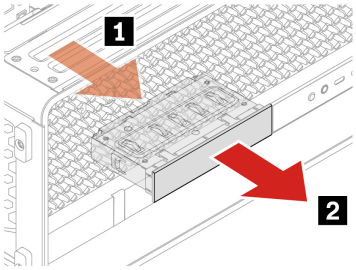

M.2 SSD storage box in NVMe storage tray

Before you start, ensure that you have read “Prerequisites for hardware replacement” on page 30.

Notes:

- 1 NVMe storage tray
- 2 M.2 SSD storage box

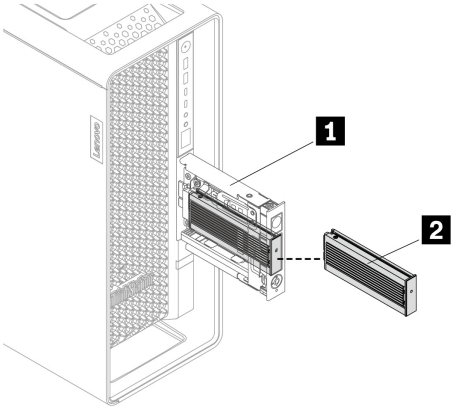

Removal steps

Remove the M.2 SSD storage box.

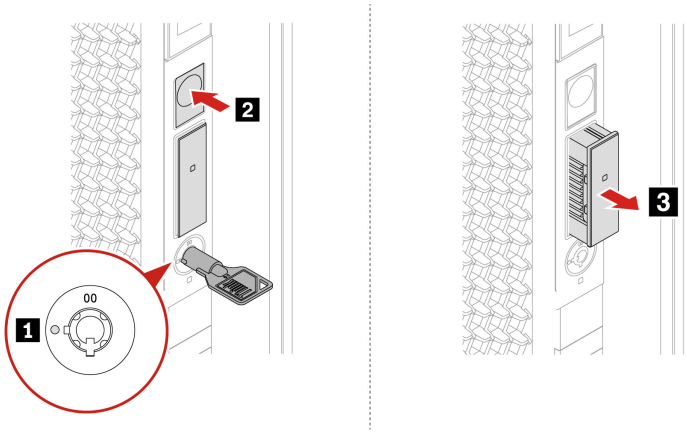

Notes:

- The lock for M.2 SSD storage box and the unlocking step are for selected models.
- The key is attached at the rear of the computer. Keys carved with xx, such as 00, 01, 02, or 03 can unlock the locks carved with the same numbers.

M.2 SSD in M.2 SSD storage box

Before you start, ensure that you have read “Prerequisites for hardware replacement” on page 30.

Removal steps

1. Remove the “M.2 SSD storage box in NVMe storage tray” on page 45.
2. Remove the M.2 SSD heatsink kit.

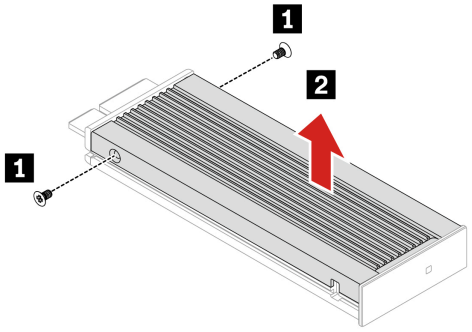

Screw specification	Quantity	Torque
M2 x 3.6 mm, Zn coated, blue	2	1.5± 0.2 lb/in

3. Remove the M.2 SSD.

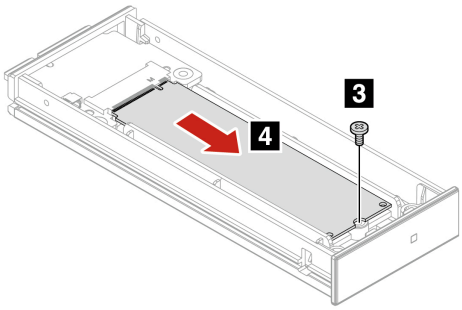

Screw specification	Quantity	Torque
M2 x 4.5 mm, Zn coated, black	1	1.5± 0.2 lb/in

On-board M.2 SSD

Before you start, ensure that you have read “Prerequisites for hardware replacement” on page 30.

Install the on-board M.2 SSDs in the following order.

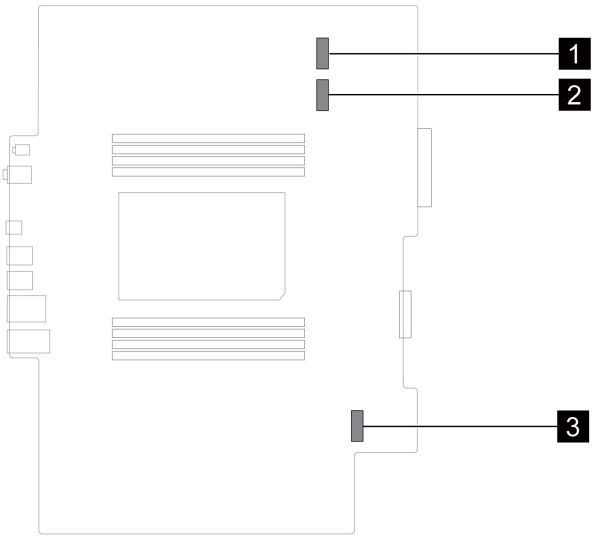

Removal steps

1. Remove the following parts if any:
   a. “Side cover” on page 35
   b. “Optional internal storage drive cage” on page 39
2. Remove the M.2 SSD with its heatsink kit.

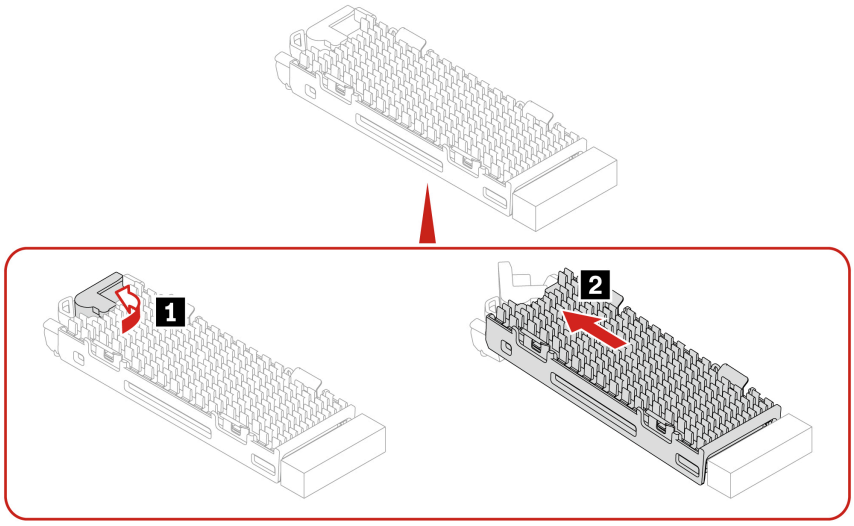

3. Remove the M.2 SSD from its heatsink kit.

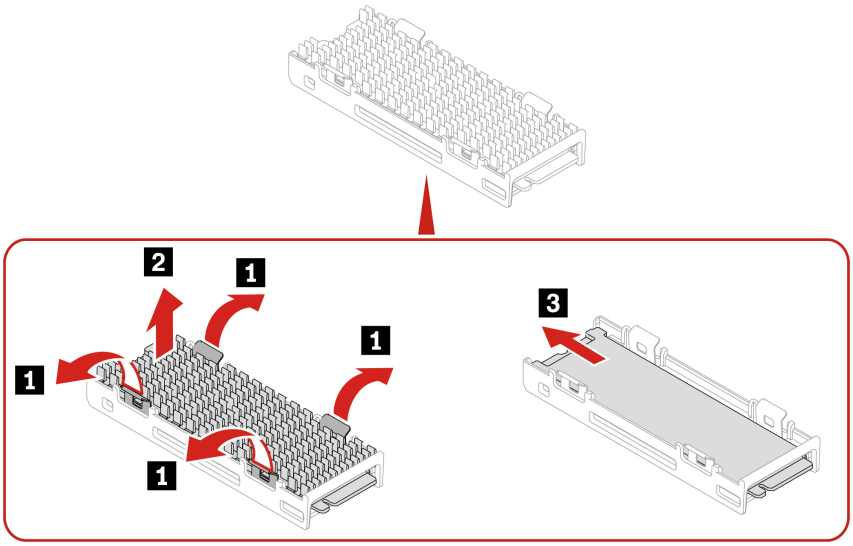

Installation steps

1. Install the M.2 SSD to its heatsink kit.

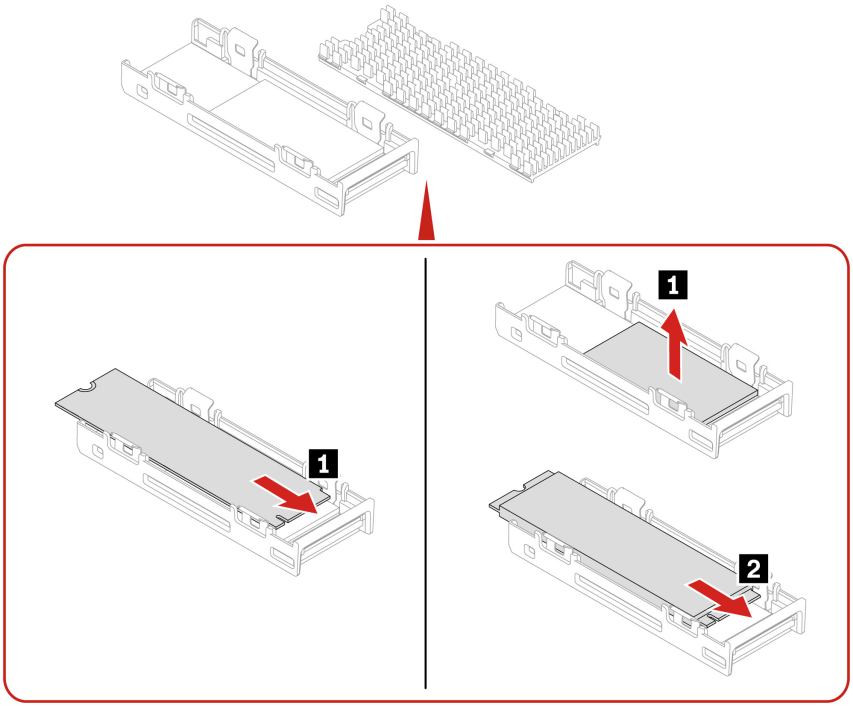

2. Install the M.2 SSD with its heatsink kit.

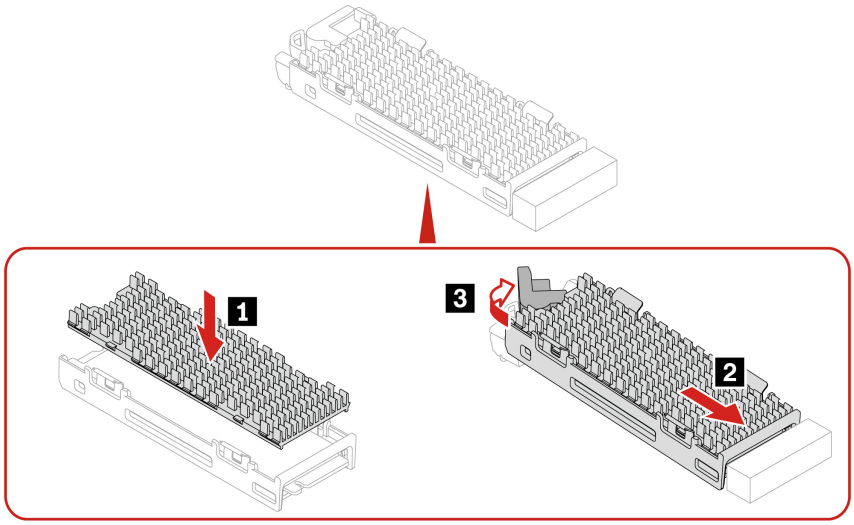

On-board M.2 SSD holder

Before you start, ensure that you have read “Prerequisites for hardware replacement” on page 30.

Replacement steps

1. Remove the following parts if any:
   a. “Side cover” on page 35
   b. “Optional internal storage drive cage” on page 39
   c. “Front fan” on page 67
   d. “Lower PCIe fan and internal storage drive fan” on page 69
   e. “On-board M.2 SSD” on page 47
2. Replace the on-board M.2 SSD holder.
   - Type 1

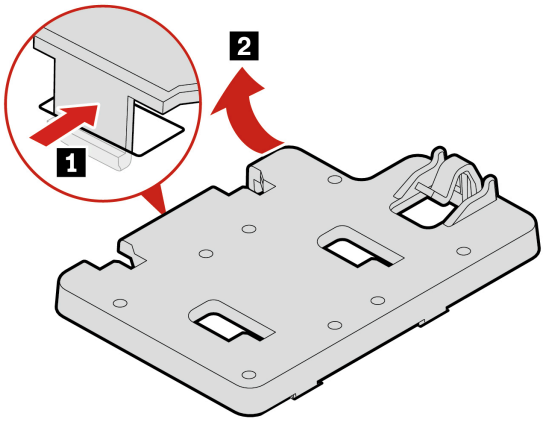

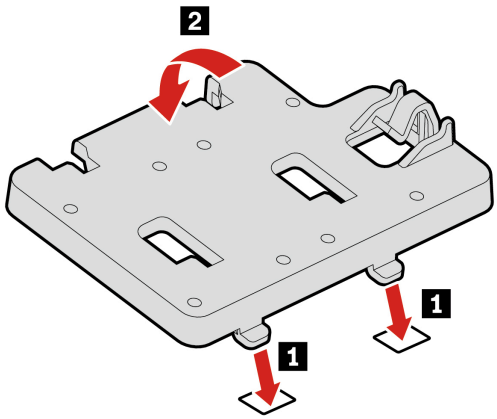

- Type 2

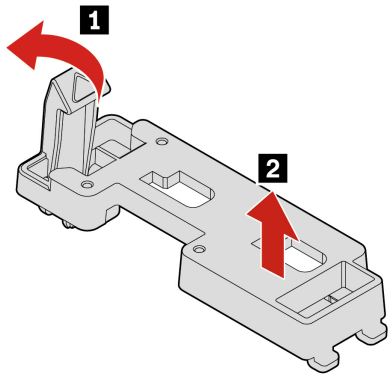

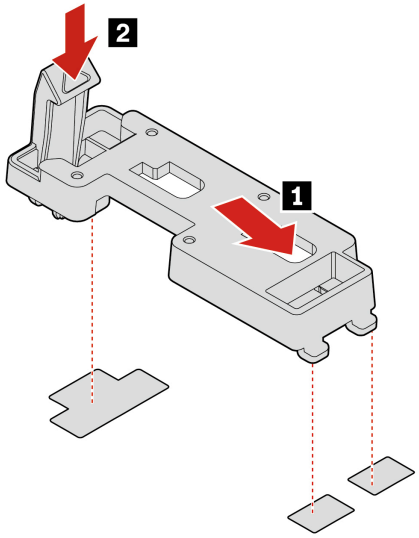

M.2 SSD in a PCIe adapter

- Before you start, ensure that you have read “Prerequisites for hardware replacement” on page 30.
- Install M.2 solid-state drives in the following order as shown:

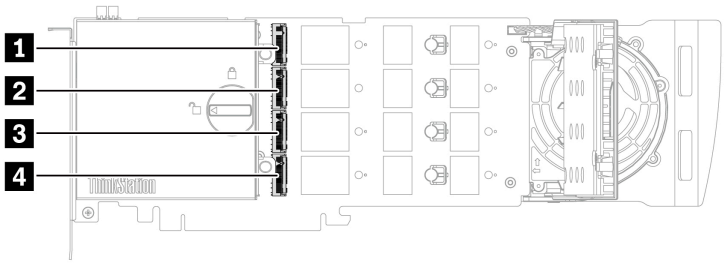

Replacement steps

1. Remove the left side cover. See “Side cover” on page 35.
2. Remove the M.2 SSD PCIe adapter from the PCIe card slot. See “Full-length PCIe card” on page 61.
3. Open the cover.

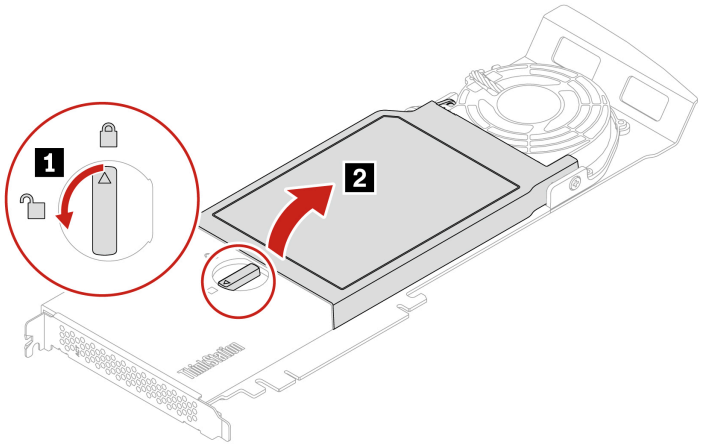

4. Remove the SSD.

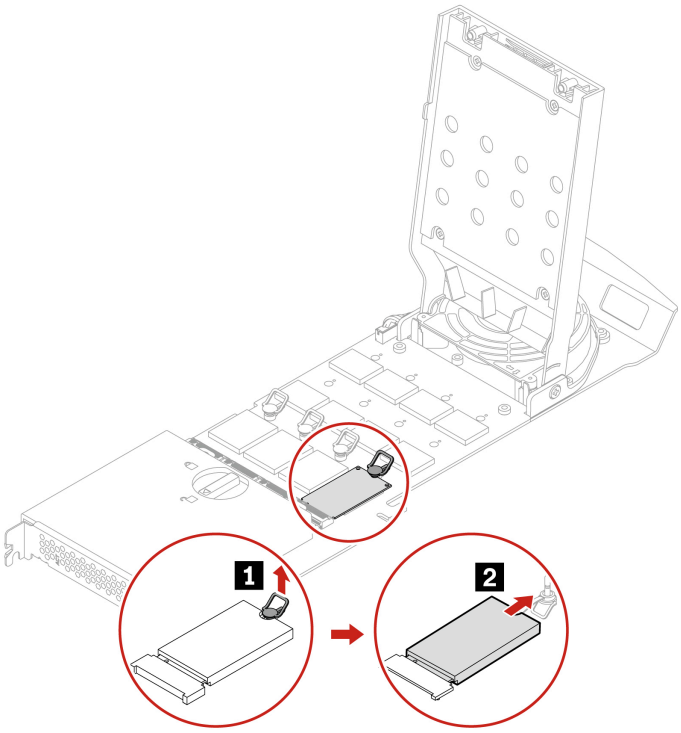

5. If necessary, move the retention latch to an appropriate location to suit the length of the new M.2 SSD.

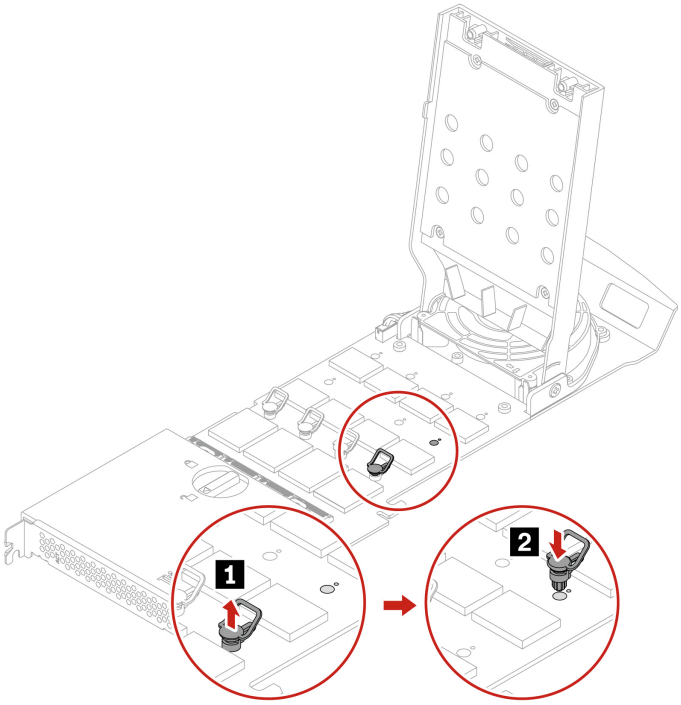

6. Remove the film and release the latch.

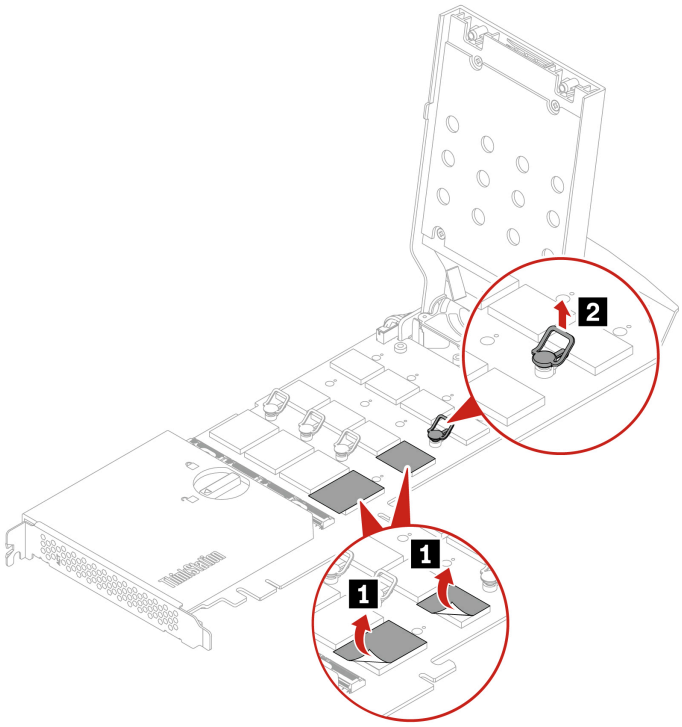

7. Install a new SSD.

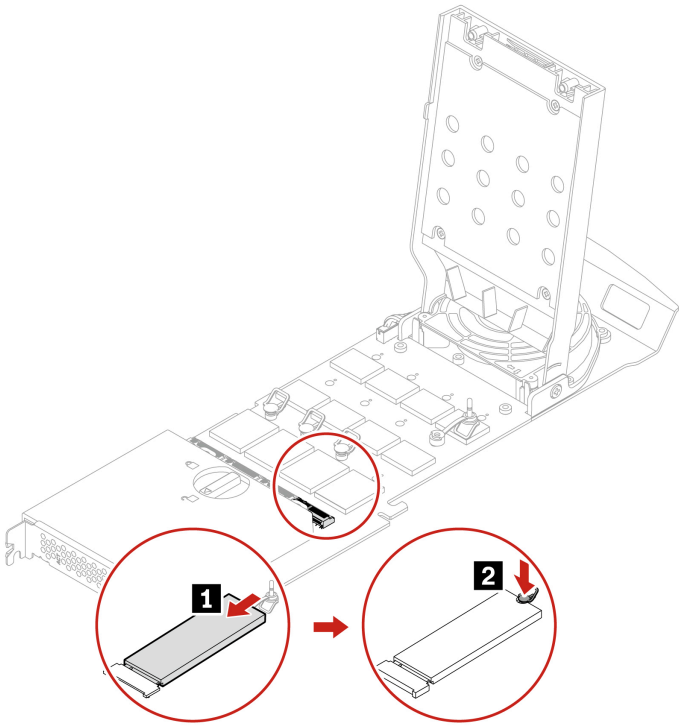

8. Close the cover.

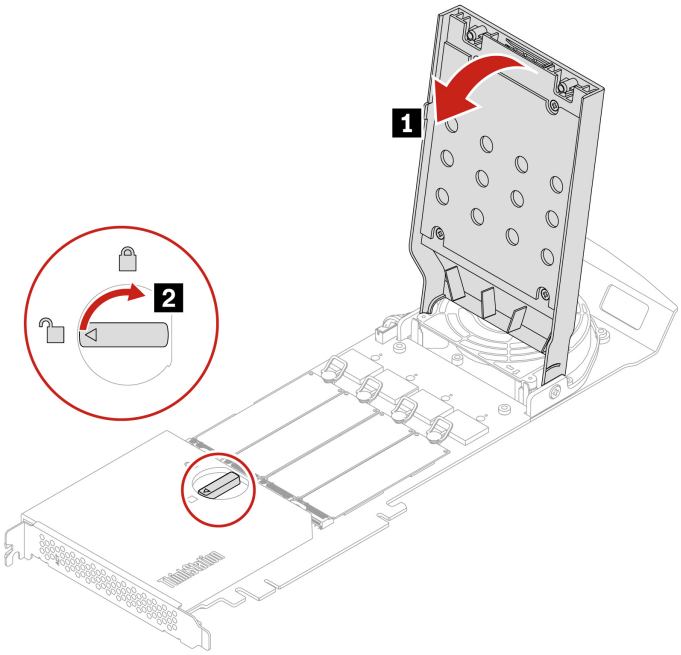

9. Install the M.2 SSD PCIe adapter in a PCIe x 16 card slot on the system board. See “System board illustration” on page 28.
10. Reinstall all removed parts. Then, reconnect the power cord and all disconnected cables to the computer.

U.2 or U.3 SSD in a PCIe adapter

Before you start, ensure that you have read “Prerequisites for hardware replacement” on page 30.

Replacement steps

1. Remove the left side cover. See “Side cover” on page 35.
2. Remove the U.2 or U.3 SSD PCIe adapter from the PCIe card slot. See “Full-length PCIe card” on page 61.
3. Open the cover.

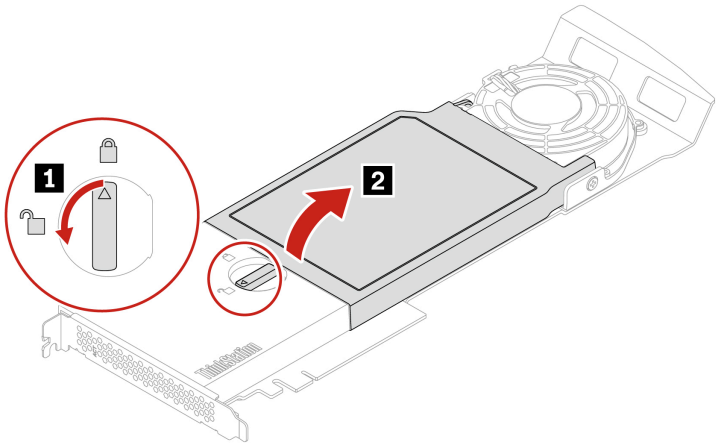

4. Remove the SSD.

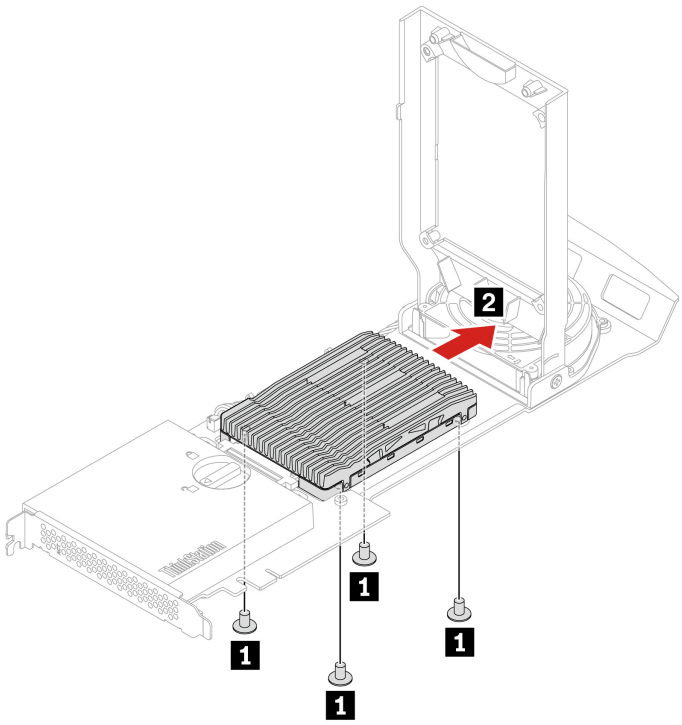

Screw specification	Quantity	Torque
M3 x 5 mm, Zn coated, black	4	5.0 ± 0.5 lb/in

5. Install a new SSD.

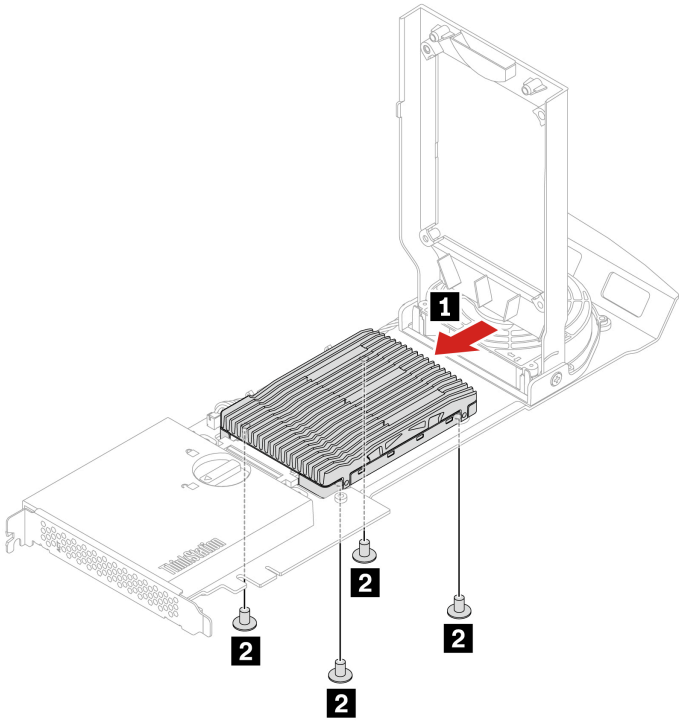

Screw specification	Quantity	Torque
M3 x 5 mm, Zn coated, black	4	5.0 ± 0.5 lb/in

6. Close the cover.

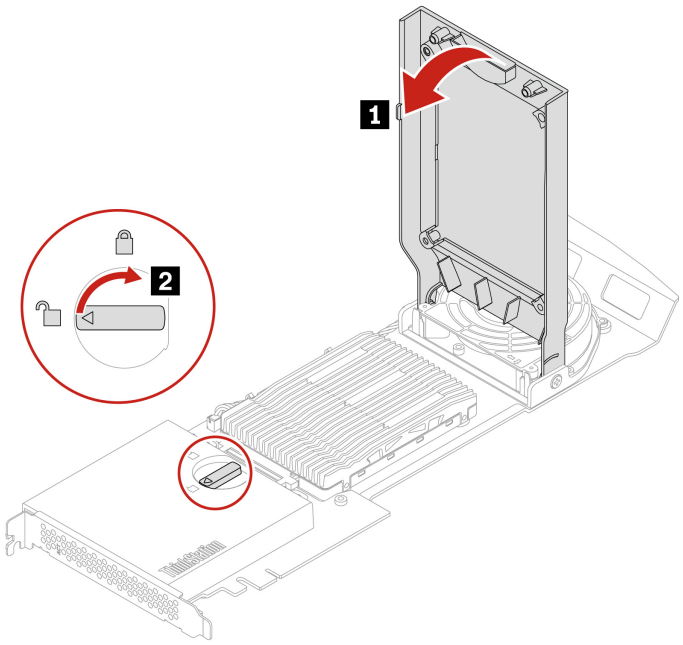

7. Install the U.2 or U.3 SSD PCIe adapter in a PCIe x 16 card slot on the system board. See “System board illustration” on page 28.
8. Reinstall all removed parts. Then, reconnect the power cord and all disconnected cables to the computer.

PCIe cards

By reading this section, you will learn to replace PCIe cards, including graphics cards, in your computer.

NVLINK retainer

Before you start, ensure that you have read “Prerequisites for hardware replacement” on page 30.

Removal steps

1. Remove the “Side cover” on page 35.
2. Remove the NVLINK retainer.

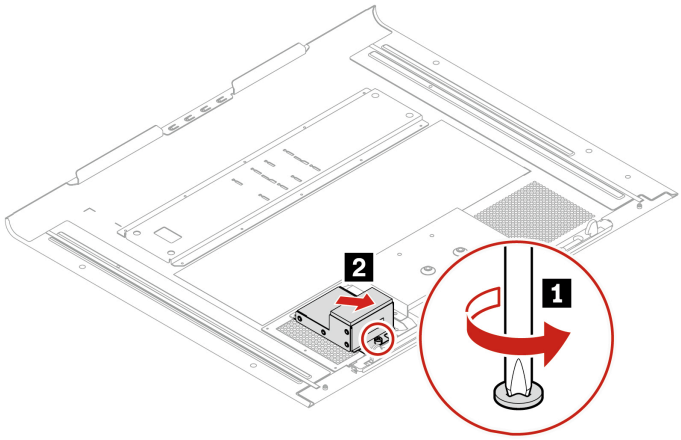

Screw specification	Quantity	Torque
M3 x 5 mm, Ni coated, black	1	5.0 ± 0.5 lb/in

Note: The screw cannot be removed from the NVLINK retainer.

NVLINK bridge

Before you start, ensure that you have read “Prerequisites for hardware replacement” on page 30.

Removal steps

1. Remove the “Side cover” on page 35.
2. Remove the NVLINK bridge.

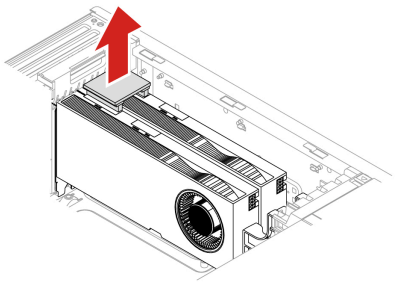

Super capacitor module

Before you start, ensure that you have read “Prerequisites for hardware replacement” on page 30.

Removal steps

1. Remove the “Side cover” on page 35.
2. Remove the super capacitor module.

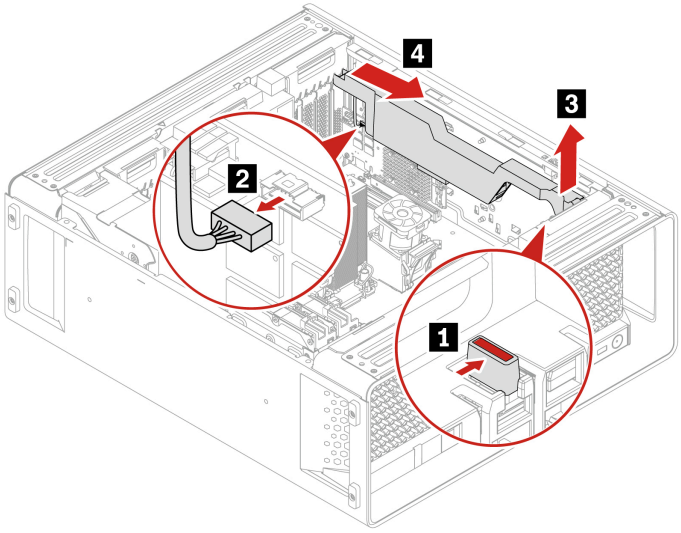

Installation notice

When installing the super capacitor module, connect the super capacitor module cable to the J14 connector on the RAID card.

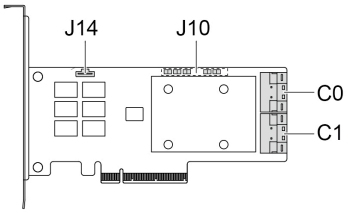

PCIe card bracket

Before you start, ensure that you have read “Prerequisites for hardware replacement” on page 30.

Removal steps

1. Remove the “Side cover” on page 35.
2. Open the handle and remove the PCIe card bracket.

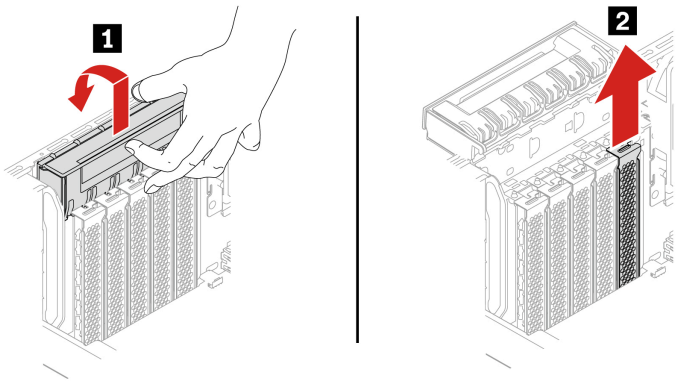

Half-length PCIe card

Before you start, ensure that you have read “Prerequisites for hardware replacement” on page 30.

Removal steps

1. Remove the “Side cover” on page 35.
2. Record the PCIe card cable routing and connections (if any), then disconnect the cables from the system board.
3. Remove the PCIe card.
   a. Remove the PCIe card retainer. The PCIe card retainer is only available on some PCIe cards.

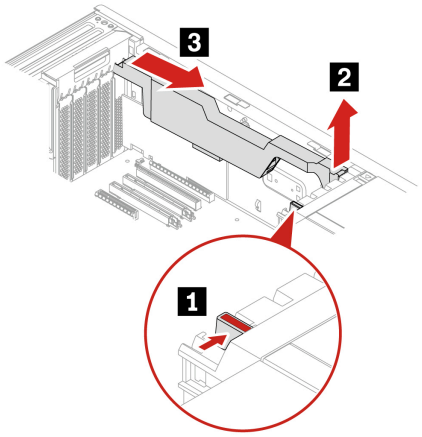

   b. Open the handle and remove the PCIe card. The card might fit tightly into the slot. If necessary, alternately move each side of the card a small amount until the card is removed from the slot.

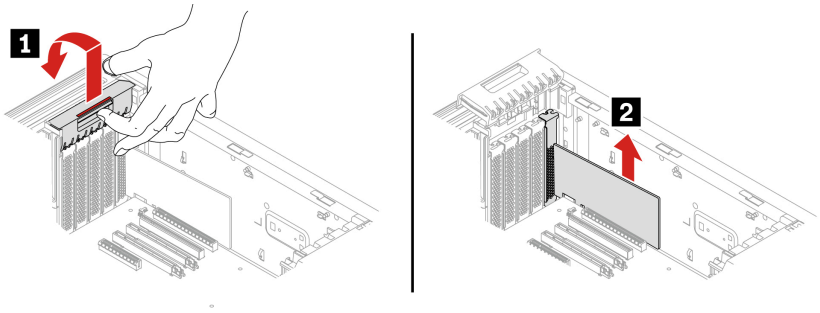

   c. For some Ethernet Adapter cards, the following fiber modules can be removed.

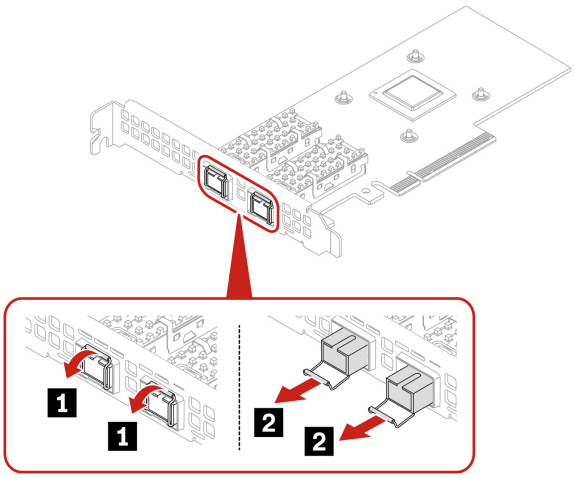

Full-length PCIe card

Before you start, ensure that you have read “Prerequisites for hardware replacement” on page 30.

Replacement steps

1. Remove the “Side cover” on page 35.
2. Record the PCIe card cable routing and connections (if any), then disconnect the cables from the system board.
3. Remove the PCIe card.
   a. Open the handle.

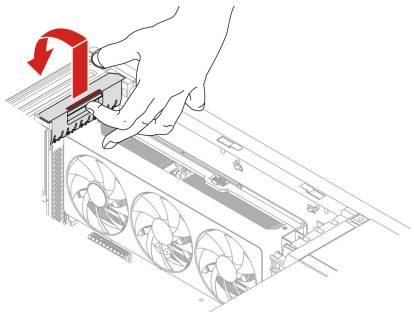

   b. Remove the screws that fix the PCIe card to the chassis (if any).

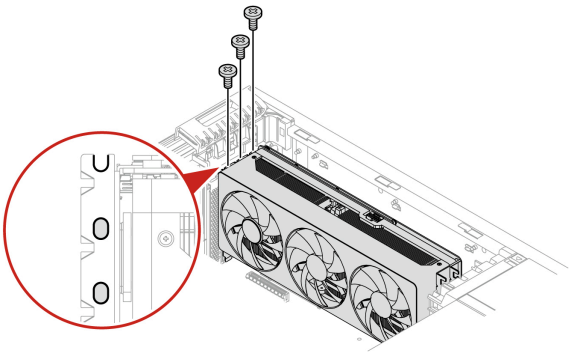

Screw specification	Quantity	Torque
M3.5 x 5 mm, Ni coated, black	3	5 ± 0.5 lb/in

c. Unlock the front card guide, then remove the PCIe card. The card might fit tightly into the slot. If necessary, alternately move each side of the card a small amount until the card is removed from the slot.

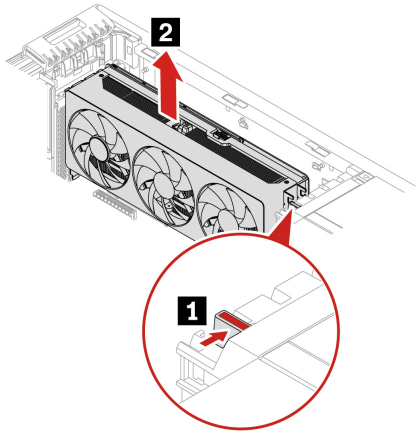

d. Remove the PCIe card extender if needed.

- For computer models with GFX RTX 4000 Ada, the graphics card and the PCIe card extender work as a CRU assembly. Do not try to remove the extender.
- For computer models with double-width or wider graphics cards (such as NVIDIA RTX 6000 Ada, GeForce 40X0/50X0, or RTX Pro 6000 BW), the PCIe card extender is a customized CRU part. You can remove it according to the following illustration.
  - Type-1

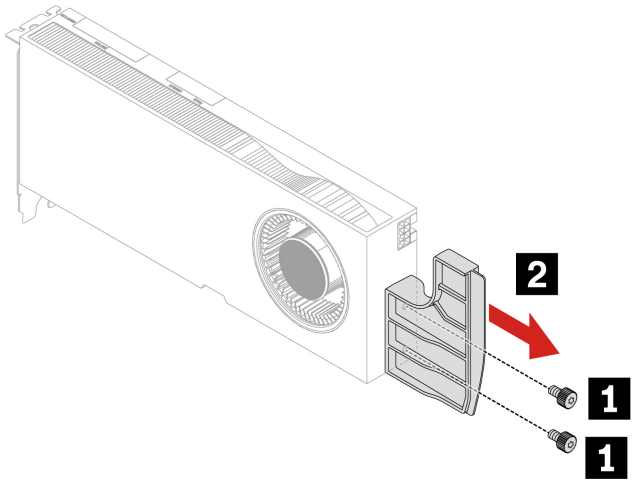

Screw specification	Quantity	Torque
M3 x 5.5 mm, Ni coated, black	2	3-3.5 lb/in

  - Type-2

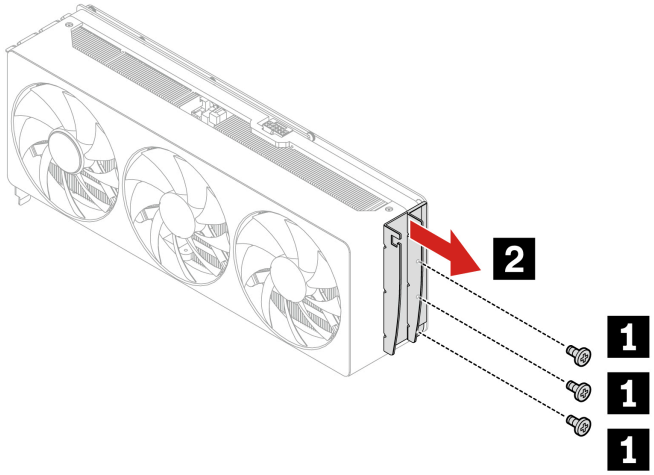

Screw specification	Quantity	Torque
M3 x 5 mm, Ni coated, black	3	3 ± 0.5 lb/in

– Type-3

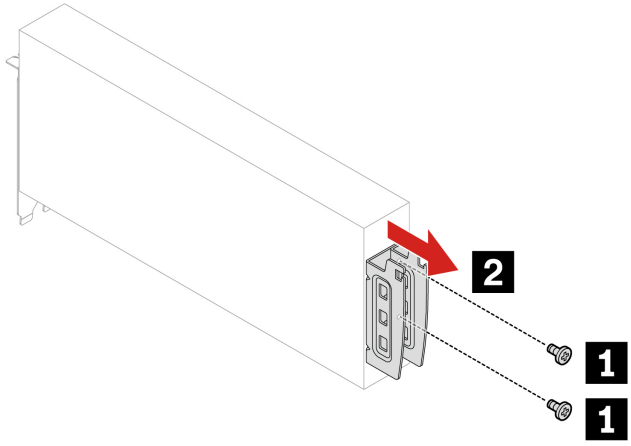

Screw specification	Quantity	Torque
M3 x 5 mm, Ni coated, black	2	3 ± 0.5 lb/in

4. Install the PCIe card and other removed parts in reverse order.

Notes:

- When installing, take care not to route any cables through the side cover handle area to ensure proper closure.
- For compatible models without a pre-installed GeForce 50X0 PCIe card, you'll need an L-shaped screwdriver (not included) to access the chassis mounting screws on the rear panel, as the card doesn't include mounting screws.

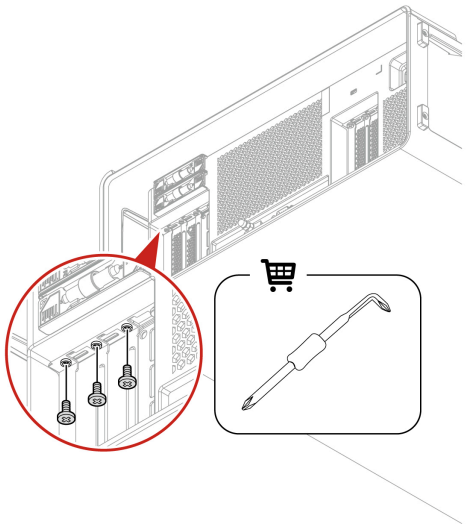

- For PCIe card installation order and special installation rules for certain PCIe cards, see “PCIe card installation rule” on page 64.

PCIe card installation rule

Before installing the PCIe card, you need to remove “PCIe card bracket” on page 59.

Install PCIe cards according to the following order and the special installation rules for certain PCIe cards.

- **Installation order**

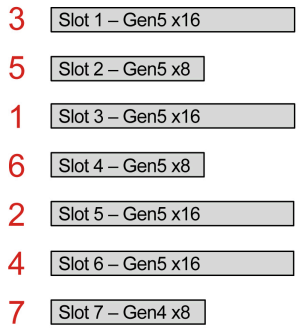

Note: Graphics cards installed in the PCIe slots should be the same.

- **Special installation rules for certain PCIe cards**

PCIe card (if supported)	Installation rule
NVIDIA GeForce RTX 40X0 or 50X0 graphics card	Install in Slot 1.
Two RTX A6000 graphics cards with NVLink	Install in Slot 1 and Slot 3.
RTX Pro 6000 BW Workstation Edition (600W) graphics card with top-venting thermal kit	– Electrical connection: Slot 3 – Physical occupancy: Slots 1–4 (inclusive) due to thermal kit
AMD Radeon PRO W7900 graphics card	Install in Slot 1 or Slot 5 (Slot 1 is prior to Slot 5).

PCIe card (if supported)	Installation rule
– M.2/U.2/U.3 SSD PCIe adapter – NVIDIA ConnectX-6 Ethernet adapter – Intel X710-T2L Ethernet adapter – Intel E810-DA2 Ethernet adapter	Install in Slot 3, Slot 5, Slot 1, or Slot 6.
BMC PCIe adapter	Install in Slot 7.
USB4 PCIe card	Install in Slot 6 or Slot 7.

Cable connection

Note: The connectors on the cards or system board might look slightly different from the illustrations.

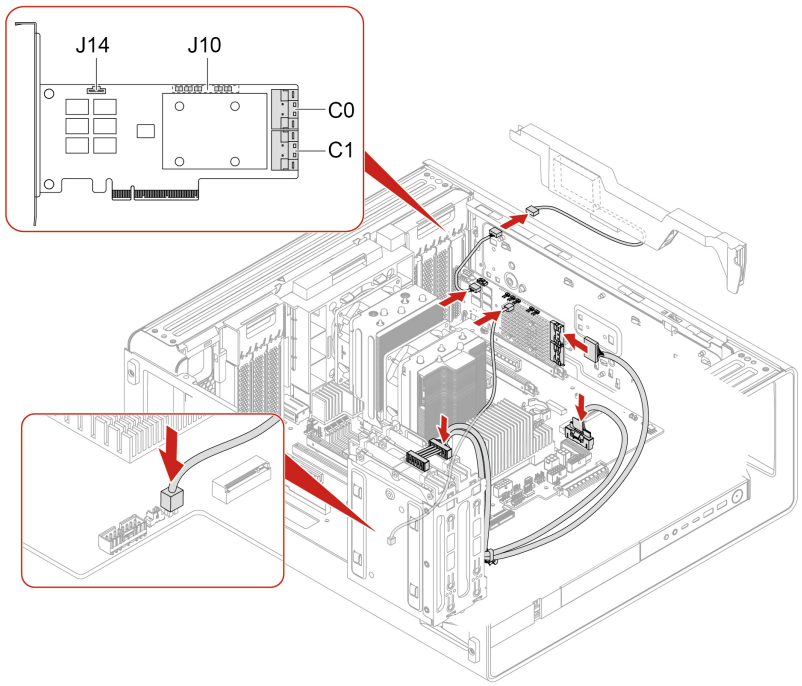

Figure 1. Cable connection for BCM9560 RAID AIC

Notes:

- C0 connector priority is higher than C1 connector.
- Internal storage drive cage priority: 1a, 1b, and 5. See “Expansion modules” on page 18.

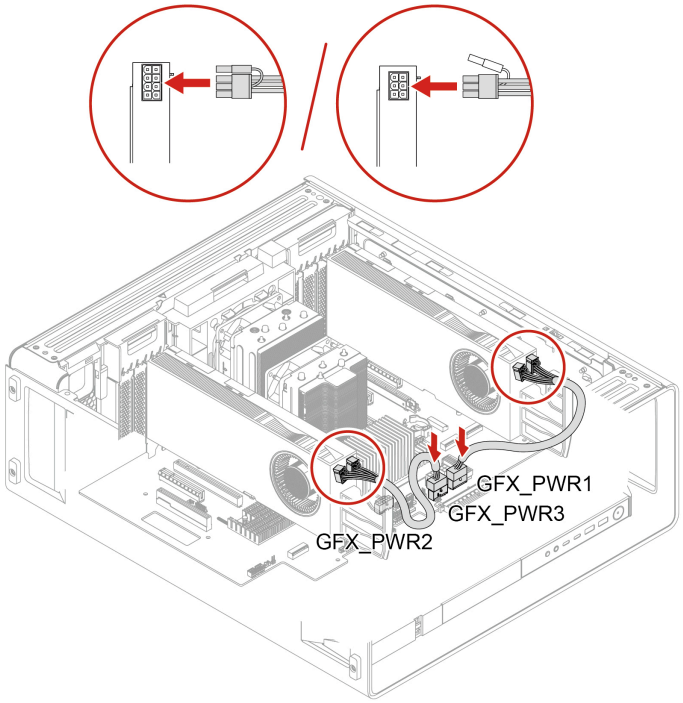

Figure 2. GFX GV100/RTX A5000/RTX A4000 Aux power connection

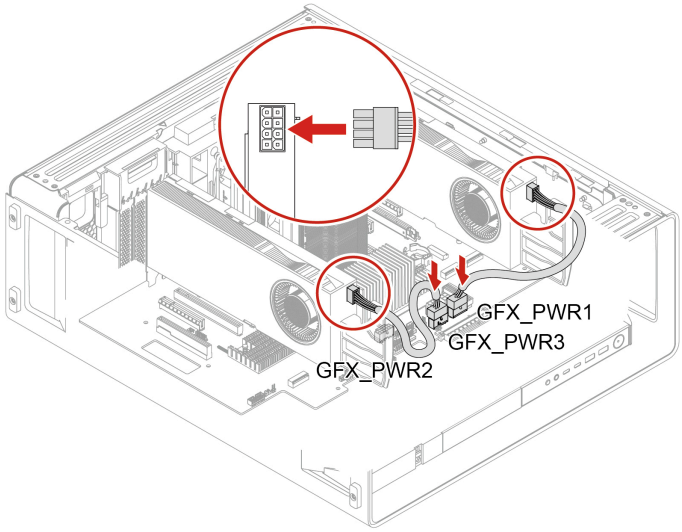

Figure 3. GFX RTX A6000 Aux power connection

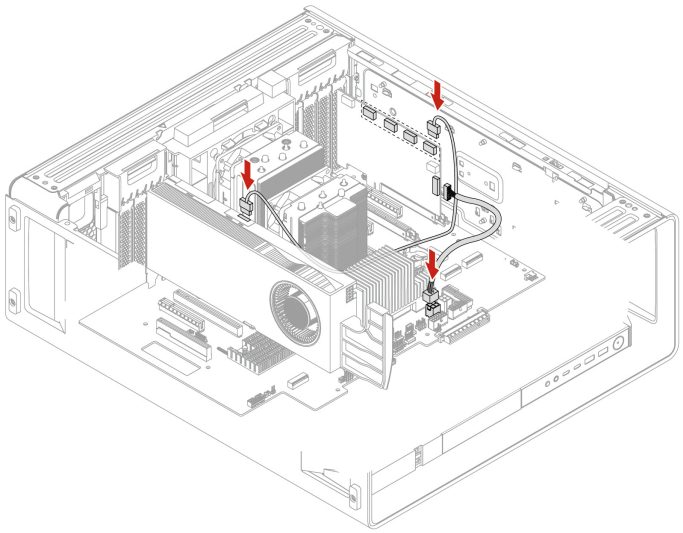

Figure 4. Cable connection for NVIDIA Quadro SYNC II card

Fans

By reading this section, you will learn to replace the fans in your computer.

Front fan

Before you start, ensure that you have read “Prerequisites for hardware replacement” on page 30.

Removal steps

1. Remove the following parts if any:
   a. “Side cover” on page 35
   b. “Optional internal storage drive cage” on page 39
2. Remove the front fan.

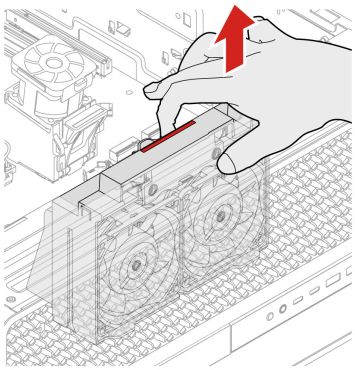

Rear fan

Before you start, ensure that you have read “Prerequisites for hardware replacement” on page 30.

Removal steps

1. Remove the following parts if any:
   a. “Side cover” on page 35
   b. “Optional internal storage drive cage” on page 39
2. Remove the rear fan.

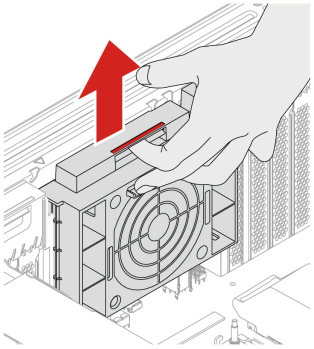

Upper PCIe fan

Before you start, ensure that you have read “Prerequisites for hardware replacement” on page 30.

Removal steps

1. Remove the following parts if any:
   a. “Side cover” on page 35
   b. “Optional internal storage drive cage” on page 39
   c. “Front fan” on page 67
2. Remove the upper PCIe fan.

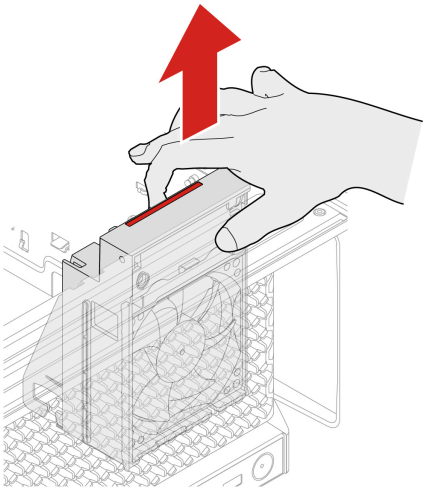

Lower PCIe fan and internal storage drive fan

Before you start, ensure that you have read “Prerequisites for hardware replacement” on page 30.

Removal steps

1. Remove the following parts if any:
   a. “Side cover” on page 35
   b. “Optional internal storage drive cage” on page 39
   c. “Front fan” on page 67
2. Remove the lower PCIe fan and internal storage drive fan together.

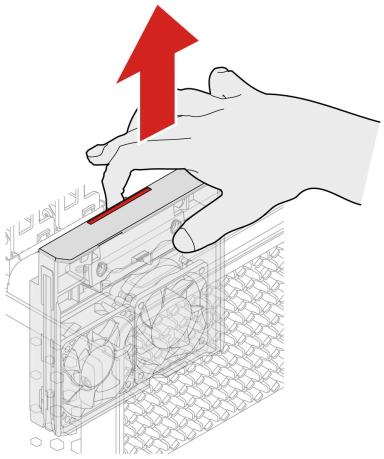

3. Remove the internal storage drive fan.

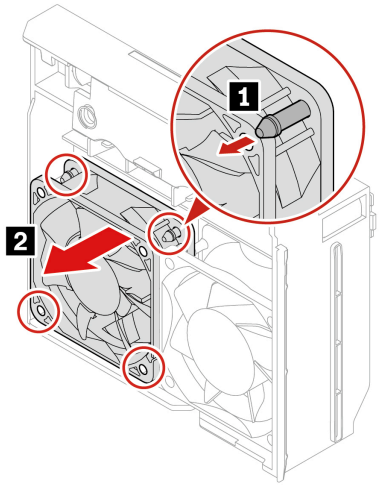

Front-access storage fan

Before you start, ensure that you have read “Prerequisites for hardware replacement” on page 30.

Removal steps

1. Remove the following parts if any:
   a. “Side cover” on page 35
   b. “Optional internal storage drive cage” on page 39
2. Remove the front-access storage fan.

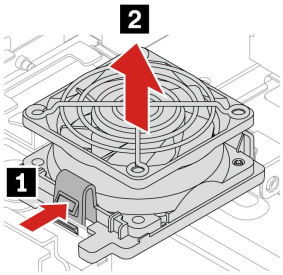

Memory fan and air duct

Before you start, ensure that you have read “Prerequisites for hardware replacement” on page 30.

Removal steps

1. Remove the following parts if any:
   a. “Side cover” on page 35
   b. “Optional internal storage drive cage” on page 39
2. Remove the memory fan and air duct.

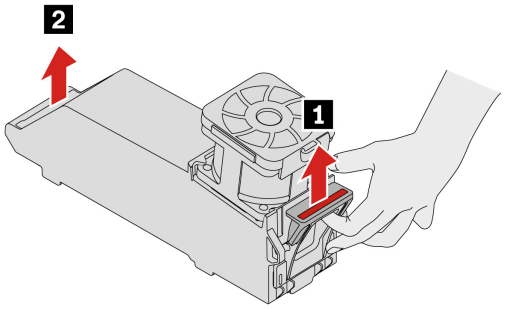

Top-venting thermal fan

Before you start, ensure that you have read “Prerequisites for hardware replacement” on page 30.

Removal steps

1. Remove the following parts if any:
   a. “Side cover” on page 35
   b. “PCIe cards” on page 57
2. Disconnect the fan cable from the flex I2C connector on the system board. See “System board illustration” on page 28.

3. Open the handle.

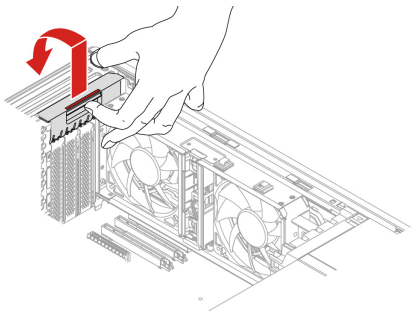

4. Remove the top-venting thermal fan.

   Note: When installing, take care not to route any cables through the side cover handle area to ensure proper closure.

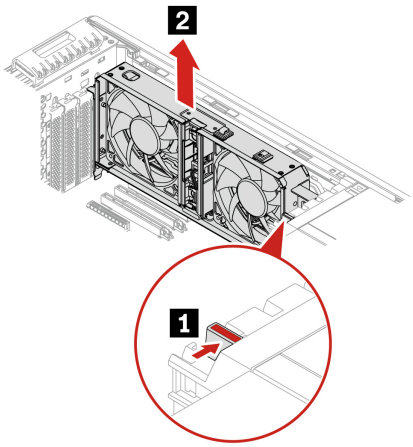

Top-venting air duct

Before you start, ensure that you have read “Prerequisites for hardware replacement” on page 30.

Replacement steps

1. Remove the following parts if any:
   a. “Side cover” on page 35
   b. “PCIe cards” on page 57
   c. “Top-venting thermal fan” on page 70
2. Remove the top-venting air duct.

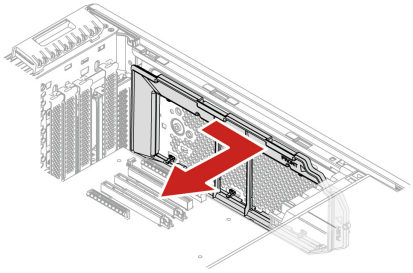

3. Install the top-venting air duct.

   Note: For optimal alignment, remove the top cover before installing the top-venting air duct.

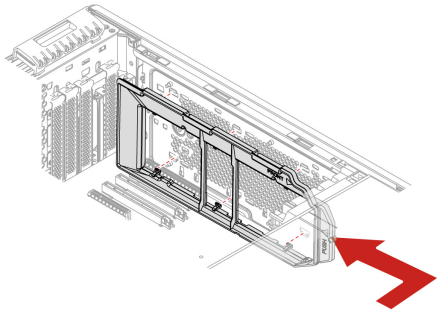

Memory module

- Before you start, ensure that you have read “Prerequisites for hardware replacement” on page 30.
- Do not replace the memory module until the LED indicator on the system board goes off. It indicates that the system is completely discharged of electricity.

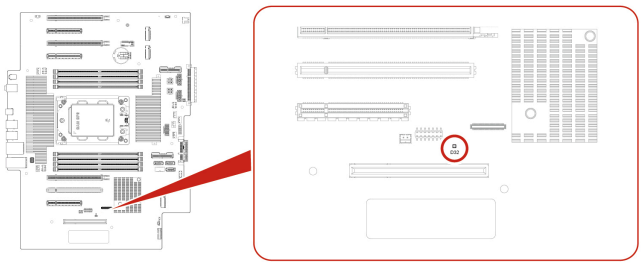

Removal steps

1. Remove the following parts if any:
   a. “Side cover” on page 35
   b. “Optional internal storage drive cage” on page 39
   c. “Memory fan and air duct” on page 70

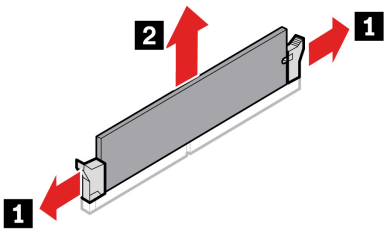

Installation steps

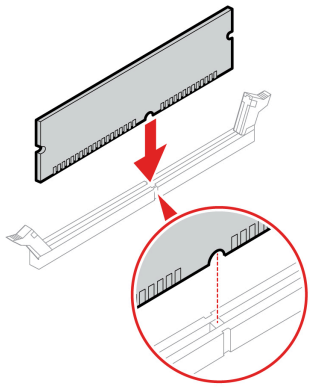

Note: Ensure that you install memory modules in the order shown in the following illustration.

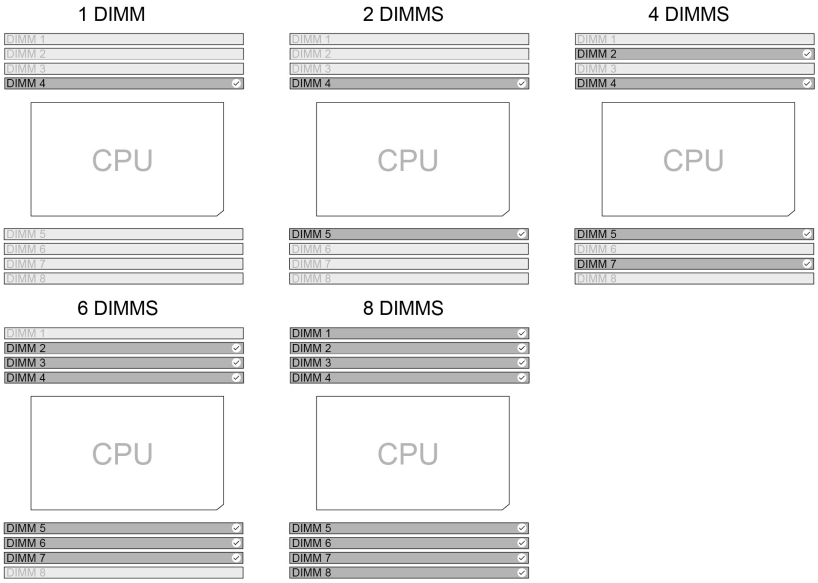

Front panel I/O assembly

Before you start, ensure that you have read “Prerequisites for hardware replacement” on page 30.

Removal steps

1. Remove the following parts if any:
   a. “Side cover” on page 35
   b. “Optional internal storage drive cage” on page 39
   c. “Front fan” on page 67
   d. “Upper PCIe fan” on page 68
2. Remove the front panel I/O assembly.

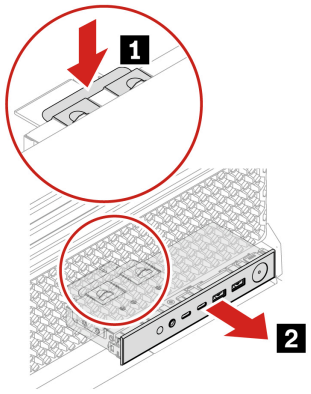

ThinkStation LED and holder

Before you start, ensure that you have read “Prerequisites for hardware replacement” on page 30.

Removal steps

1. Remove the following parts if any:
   a. “Side cover” on page 35
   b. “Optional internal storage drive cage” on page 39
   c. “Front fan” on page 67
   d. “Lower PCIe and internal storage drive fan” on page 69
2. Remove the ThinkStation LED.

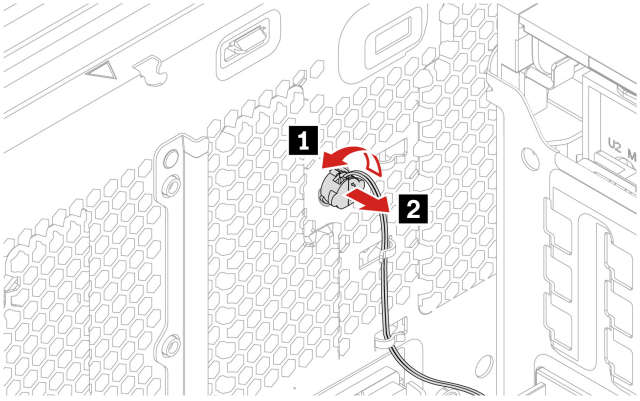

3. Remove the ThinkStation LED holder.

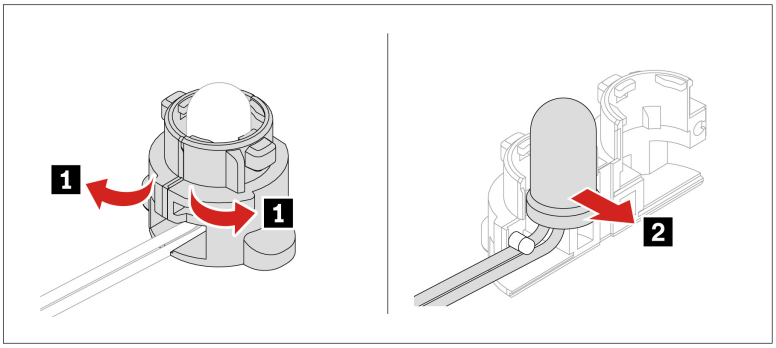

Internal speaker

Before you start, ensure that you have read “Prerequisites for hardware replacement” on page 30.

Removal steps

1. Remove the following parts if any:
   a. “Side cover” on page 35
   b. “Optional internal storage drive cage” on page 39
   c. “Front fan” on page 67
   d. “Rear fan” on page 67
   e. “Lower PCIe and internal storage drive fan” on page 69
2. Remove the internal speaker.

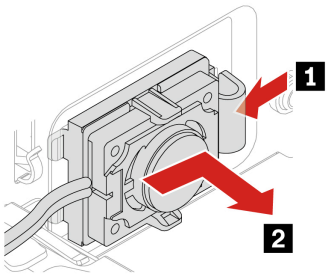

Chapter 5. Help and support

Find your serial number

This topic helps you find computer serial number.

You can find your serial number via:

- Open the Terminal and type `sudo dmidecode -t system | grep Serial`.
- Machine-type and serial-number label of your computer (shown as below illustration).

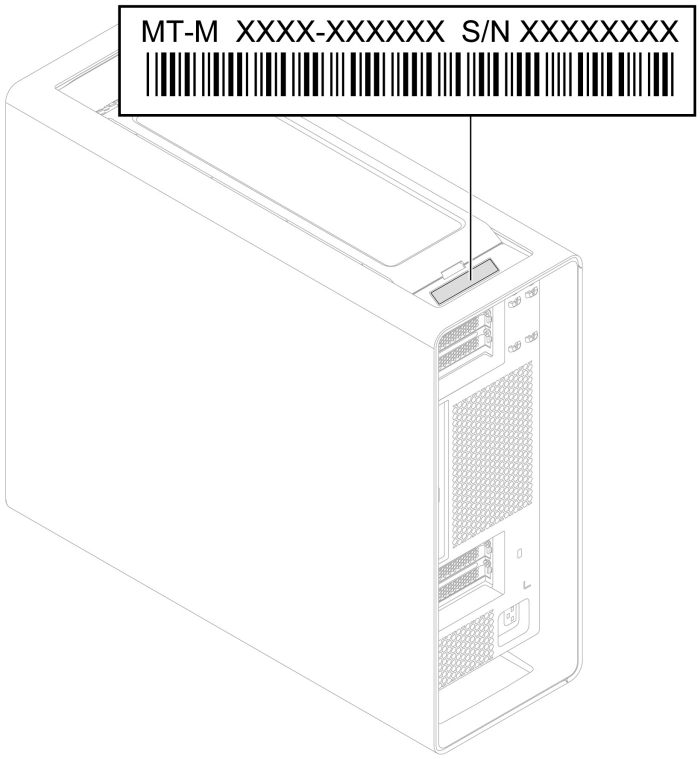

Lenovo diagnostic tools

For information about Lenovo diagnostic tools, go to:
https://pcsupport.lenovo.com/lenovodiagnosticsolutions

Call Lenovo

If you have tried to correct the problem yourself and still need help, you can call Lenovo Customer Support Center.

Before you contact Lenovo

Prepare the needed information before you contact Lenovo.

1. Record the problem symptoms and details:

© Copyright Lenovo 2026

- What is the problem? Is it continuous or intermittent?
- Any error message or error code?
- What operating system are you using? Which version?
- Which software applications were running at the time of the problem?
- Can the problem be reproduced? If so, how?

2. Record the system information:
   - Product name.
   - Machine type and “serial number” on page 76.

Lenovo Customer Support Center

During the warranty period, you can call Lenovo Customer Support Center for help.

Telephone numbers

For a list of the Lenovo Support phone numbers for your country or region, go to:
https://pcsupport.lenovo.com/supportphonelist

Note: Phone numbers are subject to change without notice. If the number for your country or region is not provided, contact your Lenovo reseller or Lenovo marketing representative.

Services available during the warranty period

- Problem determination - Trained personnel are available to assist you with determining if you have a hardware problem and deciding what action is necessary to fix the problem.
- Lenovo hardware repair - If the problem is determined to be caused by Lenovo hardware under warranty, trained service personnel are available to provide the applicable level of service.
- Engineering change management - Occasionally, there might be changes that are required after a product has been sold. Lenovo or your reseller, if authorized by Lenovo, will make selected Engineering Changes (ECs) that apply to your hardware available.

Services not covered

- Replacement or use of parts not manufactured for or by Lenovo or nonwarranted parts
- Identification of software problem sources
- Configuration of UEFI BIOS as part of an installation or upgrade
- Changes, modifications, or upgrades to device drivers
- Installation and maintenance of network operating systems (NOS)
- Installation and maintenance of programs

For the terms and conditions of the Lenovo Limited Warranty that apply to your Lenovo hardware product, see *Safety and Warranty Guide* that comes with your computer.

Self-help resources

Use the following self-help resources to learn more about the computer and troubleshoot problems.

Resources	How to access?
Lenovo Support Web Site	https://pcsupport.lenovo.com
Tips	https://www.lenovo.com/tips
Lenovo Community	https://forums.lenovo.com

Resources	How to access?
Accessibility information	https://www.lenovo.com/accessibility
Ubuntu help information	https://help.ubuntu.com/lts/ubuntu-help/index.html

Purchase accessories or additional services

This topic provides instructions on how to purchase accessories or additional services.

Accessories

Lenovo has a number of hardware accessories and upgrades to help expand the functionalities of your computer. Accessories include memory modules, storage devices, network cards, power adapters, keyboards, mice, and so on.

To shop at Lenovo, go to https://www.lenovo.com/accessories.

Additional services

During and after the warranty period, you can purchase additional services from Lenovo at https://pcsupport.lenovo.com/warrantyupgrade.

Service availability and service names might vary by country or region.

Accessibility features

Lenovo is committed to making information technology accessible to everyone, including individuals with hearing, vision, mobility, cognitive, or speech disabilities. To get the most up-to-date and detailed accessibility features information for the product, go to https://support.lenovo.com/docs/product_accessibility_features.

Certification-related information

Product name: ThinkStation P8

Machine types: 30HM, 30HF, 30HH, and 30HJ

Further compliance information related to your product is available at https://www.lenovo.com/compliance.

Compliance information

For more compliance information, refer to *Regulatory Notice* at https://support.lenovo.com/docs/common_commercial_rn and *Generic Safety and Compliance Notices* at https://pcsupport.lenovo.com/docs/generic_notices.

Supplemental information about the Ubuntu operating system

In limited countries or regions, Lenovo offers customers an option to order computers with the preinstalled Ubuntu® operating system.

If the Ubuntu operating system is available on your computer, read the following information before you use the computer. Ignore any information related to Windows-based programs, utilities, and Lenovo preinstalled applications in this documentation.

Access the Lenovo Limited Warranty

This product is covered by the terms of the Lenovo Limited Warranty (LLW), version L505-0010-02 08/2011. You can view the LLW in a number of languages from the following Web site. Read the Lenovo Limited Warranty at:
https://www.lenovo.com/warranty/llw_02

The LLW also is preinstalled on the computer. To access the LLW, go to the following directory:

```
/opt/Lenovo
```

If you cannot view the LLW either from the Web site or from your computer, contact your local Lenovo office or reseller to obtain a printed version of the LLW.

Access the Ubuntu help system

The Ubuntu help system provides information about how to use the Ubuntu operating system. To access the help system from Home Screen, move your pointer to the Launch bar, and then click the **Help** icon. If you cannot find the **Help** icon from the Launch bar, click the **Search** icon on the bottom left, and type Help to search it.

To learn more about the Ubuntu operating system, go to:
https://www.ubuntu.com

Access IGEL distributions

To learn more about the IGEL operating system, go to https://www.igel.com/support.

Get support information

If you need help, service, technical assistance, or more information about the Ubuntu operating system or other applications, contact the provider of the Ubuntu operating system or the provider of the application. If you need the service and support for hardware components shipped with your computer, contact Lenovo. For more information about how to contact Lenovo, refer to the *User Guide* and *Safety and Warranty Guide*.

To access the latest *User Guide* and *Safety and Warranty Guide*, go to:
https://pcsupport.lenovo.com

Access open-source information

This device includes software made publicly available by Lenovo, including software licensed under the General Public License and/or the Lesser General Public License (the open source software).

You may obtain a copy of the corresponding source code for any such open source software licensed under the General Public License and/or the Lesser General Public License (or any other license requiring us to make a written offer to provide corresponding source code to you) from Lenovo for a period of three years without charge except for the cost of media, shipping, and handling, upon written request to Lenovo. This offer is valid to anyone in receipt of this device.

You may send your request in writing to the address below accompanied by a check or money order for $15 to:

Lenovo Legal Department
Attn: Open Source Team / Source Code Requests
8001 Development Dr.
Morrisville, NC 27560

Please include the version of the OS and the version of the Linux Kernel pre-shipped on this Device as part of your request. Be sure to provide a return address.

The open source software is distributed in hope it will be useful, but WITHOUT ANY WARRANTY; without even the implied warranty of MERCHANTABILITY or FITNESS FOR A PARTICULAR PURPOSE. See for example the GNU General Public License and/or the Lesser General Public License for more information.

To view additional information regarding licenses, acknowledgments and required copyright notices for the open source software shipped on your Device, go to `/usr/share/doc/*/copyright`.

Appendix A. Important notice for Quebec consumers

In regard to section 79.18 of Quebec's Regulation respecting the application of the Consumer Protection Act, Lenovo in no way guarantees the availability of (a) replacement parts; (b) repair services; and (c) information necessary to maintain or repair the goods. For up-to-date information on the technical support and parts available for your purchase, please consult **https://support.lenovo.com/ca/en**.

En ce qui concerne l'article 79.18 du Règlement d'application de la Loi sur la protection du consommateur du Québec, Lenovo ne garantit en aucune façon la disponibilité des éléments suivants :(a) les pièces de rechange; (b) les services de réparation; et (c) les renseignements nécessaires à l'entretien à la réparation du bien. Pour obtenir des renseignements à jour sur le soutien technique et les pièces disponibles pour votre achat, veuillez consulter **https://support.lenovo.com/ca/fr**.

© Copyright Lenovo 2026

Appendix B. Notice for USB connector name update

The USB Implementers Forum published a revision of the guideline for USB connector names in September, 2022. Lenovo follows the revised guideline and updates USB connector names accordingly. You can refer to the table below for naming update details.

Current name	Previous name
USB-A connector (Hi-Speed USB)	USB-A 2.0 connector
USB-A connector (USB 5Gbps)	USB-A 3.2 Gen 1 connector
USB-A connector (USB 10Gbps)	USB-A 3.2 Gen 2 connector
USB-A connector (USB 5Gbps, Always On USB)	Always on USB-A 3.2 Gen 1 connector
USB-A connector (USB 10Gbps, Always On USB)	Always on USB-A 3.2 Gen 2 connector
USB-C connector (USB 5Gbps)	USB-C (3.2 Gen 1) connector
USB-C connector (USB 10Gbps)	USB-C (3.2 Gen 2) connector
USB-C connector (USB 20Gbps)	USB 3.2 Gen 2x2
USB-C connector (USB4 20Gbps)	USB 4 Gen 2x2
USB-C connector (USB4 40Gbps)	USB-C (USB 4) connector
USB-C connector (Thunderbolt 3)	USB-C (Thunderbolt 3) connector
USB-C connector (Thunderbolt 4)	USB-C (Thunderbolt 4) connector

© Copyright Lenovo 2026

Appendix C. Notices and trademarks

Notices

Lenovo may not offer the products, services, or features discussed in this document in all countries. Consult your local Lenovo representative for information on the products and services currently available in your area. Any reference to a Lenovo product, program, or service is not intended to state or imply that only that Lenovo product, program, or service may be used. Any functionally equivalent product, program, or service that does not infringe any Lenovo intellectual property right may be used instead. However, it is the user's responsibility to evaluate and verify the operation of any other product, program, or service.

Lenovo may have patents or pending patent programs covering subject matter described in this document. The furnishing of this document does not give you any license to these patents. You can send license inquiries, in writing, to:

Lenovo (United States), Inc.
8001 Development Drive
Morrisville, NC 27560
U.S.A.
Attention: Lenovo Director of Licensing

LENOVO PROVIDES THIS PUBLICATION "AS IS" WITHOUT WARRANTY OF ANY KIND, EITHER EXPRESS OR IMPLIED, INCLUDING, BUT NOT LIMITED TO, THE IMPLIED WARRANTIES OF NON-INFRINGEMENT, MERCHANTABILITY OR FITNESS FOR A PARTICULAR PURPOSE. Some jurisdictions do not allow disclaimer of express or implied warranties in certain transactions, therefore, this statement may not apply to you.

Changes are made periodically to the information herein; these changes will be incorporated in new editions of the publication. To provide better service, Lenovo reserves the right to improve and/or modify the products and software programs described in the manuals included with your computer, and the content of the manual, at any time without additional notice.

The software interface and function and hardware configuration described in the manuals included with your computer might not match exactly the actual configuration of the computer that you purchase. For the configuration of the product, refer to the related contract (if any) or product packing list, or consult the distributor for the product sales. Lenovo may use or distribute any of the information you supply in any way it believes appropriate without incurring any obligation to you.

The products described in this document are not intended for use in implantation or other life support applications where malfunction may result in injury or death to persons. The information contained in this document does not affect or change Lenovo product specifications or warranties. Nothing in this document shall operate as an express or implied license or indemnity under the intellectual property rights of Lenovo or third parties. All information contained in this document was obtained in specific environments and is presented as an illustration. The result obtained in other operating environments may vary.

Lenovo may use or distribute any of the information you supply in any way it believes appropriate without incurring any obligation to you.

Any references in this publication to non-Lenovo Web sites are provided for convenience only and do not in any manner serve as an endorsement of those Web sites. The materials at those Web sites are not part of the materials for this Lenovo product, and use of those Web sites is at your own risk.

© Copyright Lenovo 2026

Any performance data contained herein was determined in a controlled environment. Therefore, the result obtained in other operating environments may vary significantly. Some measurements may have been made on development-level systems and there is no guarantee that these measurements will be the same on generally available systems. Furthermore, some measurements may have been estimated through extrapolation. Actual results may vary. Users of this document should verify the applicable data for their specific environment.

This document is copyrighted by Lenovo and is not covered by any open source license, including any Linux® agreement(s) which may accompany software included with this product. Lenovo may update this document at any time without notice.

For the latest information or any questions or comments, contact or visit the Lenovo Web site:

- For computers purchased in mainland China
  https://newsupport.lenovo.com.cn
- For computers purchased outside mainland China
  https://pcsupport.lenovo.com

HEVC Standard

This product may support digital video coding under certain versions of HEVC (High Efficiency Video Coding) standard and, if so, may be covered by patents at https://accessadvance.com/advance-patent-lists/.



Trademarks

Lenovo, Lenovo logo, ThinkStation, and ThinkStation logo are trademarks of Lenovo. Linux is the registered trademark of Linus Torvalds in the U.S. and other countries. Mini DisplayPort (mDP) and DisplayPort are trademarks of the Video Electronics Standards Association. NVIDIA is a registered trademark of NVIDIA Corporation. The terms HDMI and HDMI High-Definition Multimedia Interface are trademarks or registered trademarks of HDMI Licensing LLC in the United States and other countries. USB-C® is registered trademark of USB Implementers Forum. Wi-Fi, Wi-Fi Alliance, and Miracast are registered trademarks of Wi-Fi Alliance. CompactFlash is a trademark of the CFA (CompactFlash Association). SD, SDHC, and SDXC are trademarks of SD-3C LLC. MultiMediaCard is a trademark of Infineon Technologies AG of Germany and is licensed to the MMCA (MultiMediaCard Association). Memory Stick, Memory Stick Duo, Memory Stick PRO, Memory Stick PRO Duo, and Memory Stick PRO-HG Duo are trademarks of Sony Corporation. ENERGY STAR is a trademark of the U.S. Environmental Protection Agency. Thunderbolt is a trademark of Intel Corporation or its subsidiaries in the U.S. and/or other countries. All other trademarks are the property of their respective owners.


Lenovo