Hardware Maintenance Manual



ThinkStation P8

Tenth Edition (August 2026)

© Copyright Lenovo 2026.

LIMITED AND RESTRICTED RIGHTS NOTICE: If data or software is delivered pursuant to a General Services Administration “GSA” contract, use, reproduction, or disclosure is subject to restrictions set forth in Contract No. GS-35F-05925.

Contents

Chapter 1. Important safety information 1

General safety 1
Electrical safety 2
Safety inspection guide 3
Handling electrostatic discharge-sensitive devices 4
Grounding requirements 4
Safety notices (multi-lingual translations) 4

Chapter 2. Important service information 27

Strategy for replacing FRUs 27
- Strategy for replacing a hard disk drive or a solid-state drive 27
- Important notice for replacing a system board 27
- How to use error codes 28

Strategy for replacing FRUs for CTO, special-bid, and standard models. 28
- Product definition 28
- FRU identification 28

Chapter 3. Product overview 29

Front 29
Left 30
Top 31
Rear 32
Expansion modules 32
Cooling system 35

Chapter 4. Service checkout and symptom-to-FRU index 37

Service checkout 37
- Problem determination tips 37

Symptom-to-FRU index 38
- Hard disk drive boot error 38
- Power supply problems 39
- Beep symptoms 39
- POST error codes 40
- Miscellaneous error conditions 41
- Undetermined problems 43

BIOS recovery 44
- Clear CMOS jumpers 44
- Clear CMOS 44
- Recover from a BIOS update failure 45

Chapter 5. RAID 46

What is RAID 46
Configure RAID with RAIDXpert2 Configuration Utility 46
Configure RAID with MegaRAID Configuration Utility 49

Chapter 6. Diagnostics 52

Basic procedure for resolving computer problems 52
UEFI diagnostic program 52
Use ThinkStation diagnostic tool 53
Use the Vantage app 53
Self-help resources 54

Chapter 7. Hardware replacement . . 56

Interactive video guide 56
Before hardware replacement 56
- Service tool kit 56
- Major FRUs and CRUs 58
- System board illustration 61
- Prerequisites for hardware replacement . . . 63
- Handling static-sensitive devices 64

ThinkStation logo badge 65
Computer ID badge 65
Top cover 65
Wi-Fi antenna cover 67
Keys for side cover and M.2 SSD storage box . . . 67
Side cover 68
Power supply assembly. 71
Storage drives 72
- Optional internal storage drive cage 72
- HDD in optional internal storage drive cage . . 72
- HDD in the internal storage drive cage 73
- U.2 or U.3 SSD in the internal storage drive cage 74
- M.2 SSD bracket in internal storage drive cage 76
- Device in the front-access storage bay 77
- M.2 SSD storage box in NVMe storage tray . . 79
- M.2 SSD in M.2 SSD storage box 80
- On-board M.2 SSD. 81
- On-board M.2 SSD holder 85
- M.2 SSD in a PCIe adapter. 86
- U.2 or U.3 SSD in a PCIe adapter 90

PCIe cards. 92
- NVLINK retainer 92
- NVLINK bridge 93
- Super capacitor module. 93
- PCIe card bracket 94
- Half-length PCIe card. 95

© Copyright Lenovo 2026

Full-length PCIe card 96
PCIe card installation rule 99
Cable connection 100
Fans 102
Front fan 102
Rear fan 102
Upper PCIe fan 103
Lower PCIe fan and internal storage drive fan 104
Front-access storage fan 104
Memory fan and air duct 105
Top-venting thermal fan 105
Top-venting air duct 106
Memory module 107
Front panel I/O assembly 108
ThinkStation LED and holder 109
Internal speaker 110
BMC card 110
Wi-Fi card and Wi-Fi card cover 112
Front and rear Wi-Fi antennas 113
Intrusion switch 114
Thermal sensor 114
Serial connector cable 115
CPU heat sink 115
CPU 117
System board 120
Coin-cell battery 121
Rear power button 123

Appendix A. Important notice for Quebec consumers 125

Appendix B. Notices and trademarks 126

About this manual

This manual provides service and reference information for ThinkStation® computers listed on the front cover.

Illustrations in this manual might look different from your product.

Use this manual along with the advanced diagnostic tests to troubleshoot problems.

Important: It is recommended that these products be repaired by trained service technicians. For customers electing to repair their own ThinkStation products, please follow all instructions carefully. Use this manual along with the advanced diagnostic tests to troubleshoot problems effectively. Before servicing a ThinkStation computer, be sure to read and understand Chapter 1 “Important safety information” on page 1.

Chapter 1. Important safety information

General safety

Follow these rules to ensure general safety:

- Observe good housekeeping in the area of the machines during and after maintenance.
- When lifting any heavy object:
  1. Ensure you can stand safely without slipping.
  2. Distribute the weight of the object equally between your feet.
  3. Use a slow lifting force. Never move suddenly or twist when you attempt to lift.
  4. Lift by standing or by pushing up with your leg muscles; this action removes the strain from the muscles in your back.

     Attention: Do not attempt to lift any objects that weigh more than 16 kg (35 lb) or objects that you think are too heavy for you.
- Do not perform any action that causes hazards to the customer, or that makes the equipment unsafe.
- Before you start the machine, ensure that other people are not in a hazardous position.
- Place removed covers and other parts in a safe place, away from all personnel, while you are servicing the machine.
- Keep your tool case away from walk areas so that other people will not trip over it.
- Do not wear loose clothing that can be trapped in the moving parts of a machine. Ensure that your sleeves are fastened or rolled up above your elbows. If your hair is long, fasten it.
- Insert the ends of your necktie or scarf inside clothing or fasten it with a nonconductive clip, approximately 8 centimeters (3 inches) from the end.
- Do not wear jewelry, chains, metal-frame eyeglasses, or metal fasteners for your clothing.

  Remember: Metal objects are good electrical conductors.
- Wear safety glasses when you are: hammering, drilling, soldering, cutting wire, attaching springs, using solvents, or working in any other conditions that might be hazardous to your eyes.
- After service, reinstall all safety shields, guards, labels, and ground wires. Replace any safety device that is worn or defective.
- Reinstall all covers correctly before returning the machine to the customer.

CAUTION:



Keep fingers and other parts of your body away from hazardous, moving parts. If you suffer an injury, seek medical care immediately.

CAUTION:



Avoid contact with hot components inside the computer. During operation, some components become hot enough to burn the skin. Before you open the computer cover, turn off the computer, disconnect power, and wait approximately 10 minutes for the components to cool.

© Copyright Lenovo 2026

Electrical safety



CAUTION:
Electrical current from power, telephone, and communication cables can be hazardous. To avoid personal injury or equipment damage, disconnect the attached power cords, telecommunication systems, networks, and modems before you open the computer covers, unless instructed otherwise in the installation and configuration procedures.

Observe the following rules when working on electrical equipment.

Important: Use only approved tools and test equipment. Some hand tools have handles covered with a soft material that does not insulate you when working with live electrical currents. Many customers have, near their equipment, rubber floor mats that contain small conductive fibers to decrease electrostatic discharges. Do not use this type of mat to protect yourself from electrical shock.

- Find the room emergency power-off (EPO) switch, disconnecting switch, or electrical outlet. If an electrical accident occurs, you can then operate the switch or unplug the power cord quickly.
- Do not work alone under hazardous conditions or near equipment that has hazardous voltages.
- Disconnect all power before:
  - Performing a mechanical inspection
  - Working near power supplies
  - Removing or installing Field Replaceable Units (FRUs)
- Before you start to work on the machine, unplug the power cord. If you cannot unplug it, ask the customer to power-off the wall box that supplies power to the machine and to lock the wall box in the off position.
- If you need to work on a machine that has exposed electrical circuits, observe the following precautions:
  - Ensure that another person, familiar with the power-off controls, is near you.
    Remember: Another person must be there to switch off the power, if necessary.
  - Use only one hand when working with powered-on electrical equipment; keep the other hand in your pocket or behind your back.
    Remember: There must be a complete circuit to cause electrical shock. By observing the above rule, you may prevent a current from passing through your body.
  - When using a tester, set the controls correctly and use the approved probe leads and accessories for that tester.
  - Stand on suitable rubber mats (obtained locally, if necessary) to insulate you from grounds such as metal floor strips and machine frames.

  Observe the special safety precautions when you work with very high voltages; these instructions are in the safety sections of maintenance information. Use extreme care when measuring high voltages.
- Regularly inspect and maintain your electrical hand tools for safe operational condition.
- Do not use worn or broken tools and testers.
- *Never assume* that power has been disconnected from a circuit. First, *check* that it has been powered-off.
- Always look carefully for possible hazards in your work area. Examples of these hazards are moist floors, nongrounded power extension cables, power surges, and missing safety grounds.
- Do not touch live electrical circuits with the reflective surface of a plastic dental mirror. The surface is conductive; such touching can cause personal injury and machine damage.
- Do not service the following parts with the power on when they are removed from their normal operating places in a machine:

  - Power supply units
  - Pumps
  - Blowers and fans
  - Motor generators

  and similar units. (This practice ensures correct grounding of the units.)
- If an electrical accident occurs:
  - Use caution; do not become a victim yourself.
  - Switch off power.
  - Send another person to get medical aid.

Safety inspection guide

The intent of this inspection guide is to assist you in identifying potentially unsafe conditions on these products. Each machine, as it was designed and built, had required safety items installed to protect users and service personnel from injury. This guide addresses only those items. However, good judgment should be used to identify potential safety hazards due to attachment of features or options not covered by this inspection guide.

If any unsafe conditions are present, you must determine how serious the apparent hazard could be and whether you can continue without first correcting the problem.

Consider these conditions and the safety hazards they present:

- Electrical hazards, especially primary power (primary voltage on the frame can cause serious or fatal electrical shock).
- Explosive hazards, such as a damaged CRT face or bulging capacitor
- Mechanical hazards, such as loose or missing hardware

The guide consists of a series of steps presented in a checklist. Begin the checks with the power off, and the power cord disconnected.

Checklist:

1. Check exterior covers for damage (loose, broken, or sharp edges).
2. Power-off the computer. Disconnect the power cord.
3. Check the power cord for:
   a. A third-wire ground connector in good condition. Use a meter to measure third-wire ground continuity for 0.1 ohm or less between the external ground pin and frame ground.
   b. The power cord should be the appropriate type as specified in the parts listings.
   c. Insulation must not be frayed or worn.
4. Remove the cover.
5. Check for any obvious alterations. Use good judgment as to the safety of any alterations.
6. Check inside the unit for any obvious unsafe conditions, such as metal filings, contamination, water or other liquids, or signs of fire or smoke damage.
7. Check for worn, frayed, or pinched cables.
8. Check that the power-supply cover fasteners (screws or rivets) have not been removed or tampered with.

Handling electrostatic discharge-sensitive devices

Any computer part containing transistors or integrated circuits (ICs) should be considered sensitive to electrostatic discharge (ESD). ESD damage can occur when there is a difference in charge between objects. Protect against ESD damage by equalizing the charge so that the machine, the part, the work mat, and the person handling the part are all at the same charge.

Notes:

1. Use product-specific ESD procedures when they exceed the requirements noted here.
2. Make sure that the ESD protective devices you use have been certified (ISO 9000) as fully effective.

When handling ESD-sensitive parts:

- Keep the parts in protective packages until they are inserted into the product.
- Avoid contact with other people while handling the part.
- Wear a grounded wrist strap against your skin to eliminate static on your body.
- Prevent the part from touching your clothing. Most clothing is insulative and retains a charge even when you are wearing a wrist strap.
- Use the black side of a grounded work mat to provide a static-free work surface. The mat is especially useful when handling ESD-sensitive devices.
- Select a grounding system, such as those listed below, to provide protection that meets the specific service requirement.

  Note: The use of a grounding system is desirable but not required to protect against ESD damage.

  – Attach the ESD ground clip to any frame ground, ground braid, or green-wire ground.
  – Use an ESD common ground or reference point when working on a double-insulated or battery-operated system. You can use coax or connector-outside shells on these systems.
  – Use the round ground-prong of the ac plug on ac-operated computers.

Grounding requirements

Electrical grounding of the computer is required for operator safety and correct system function. Proper grounding of the electrical outlet can be verified by a certified electrician.

Safety notices (multi-lingual translations)

The caution and danger safety notices in this section are provided in the following languages:

- English
- Arabic
- Brazilian/Portuguese
- Chinese (simplified)
- Chinese (traditional)
- French
- German
- Hebrew
- Italian
- Korean

- Spanish



DANGER

Electrical current from power, telephone and communication cables is hazardous.

To avoid a shock hazard:

- **Do not connect or disconnect any cables or perform installation, maintenance, or reconfiguration of this product during an electrical storm.**
- **Connect all power cords to a properly wired and grounded electrical outlet.**
- **Connect to properly wired outlets any equipment that will be attached to this product.**
- **When possible, use one hand only to connect or disconnect signal cables.**
- **Never turn on any equipment when there is evidence of fire, water, or structural damage.**
- **Disconnect the attached power cords, telecommunications systems, networks, and modems before you open the device covers, unless instructed otherwise in the installation and configuration procedures.**
- **Connect and disconnect cables as described in the following tables when installing, moving, or opening covers on this product or attached devices.**

To Connect	To Disconnect
1. Turn everything OFF. 2. First, attach all cables to devices. 3. Attach signal cables to connectors. 4. Attach power cords to outlet. 5. Turn device ON.	1. Turn everything OFF. 2. First, remove power cords from outlet. 3. Remove signal cables from connectors. 4. Remove all cables from devices.



CAUTION:
If your system has a module containing a lithium battery, replace it only with the same module type made by the same manufacturer. The battery contains lithium and can explode if not properly used, handled, or disposed of. *Do not:*

- **Throw or immerse into water**
- **Heat to more than 100°C (212°F)**
- **Repair or disassemble**

Dispose of the battery as required by local ordinances or regulations.



CAUTION:
When laser products (such as CD-ROMs, DVD-ROM drives, fiber optic devices, or transmitters) are installed, note the following:

- **Do not remove the covers. Removing the covers of the laser product could result in exposure to hazardous laser radiation. There are no serviceable parts inside the device.**
- **Use of controls or adjustments or performance of procedures other than those specified herein might result in hazardous radiation exposure.**

DANGER

Some laser products contain an embedded Class 3A or Class 3B laser diode. Note the following: Laser radiation when open. Do not stare into the beam, do not view directly with optical instruments, and avoid direct exposure to the beam.





≥18 kg (37 lb)



≥32 kg (70.5 lb)



≥55 kg (121.2 lb)

CAUTION:
Use safe practices when lifting.



CAUTION:
The power control button on the device and the power switch on the power supply do not turn off the electrical current supplied to the device. The device also might have more than one power cord. To remove all electrical current from the device, ensure that all power cords are disconnected from the power source.

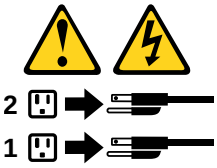



خـــطر

التيـار الكـهربـي المـوجـود بمصـدر الطـاقـة أو أجـهزة التليفـون أو أسـلاك الإتـصالات يشـكل خـطورة.

لـتفادي مخـاطـر الصـدمـات الكـهربـائـية:

لا تحاول توصيل أو فصل أي أسـلاك أو القـيام بعـمليات تـركيب أو صـيانـة أوإعـادة توصـيف لـهذا المنتج أثـناء وجـود عاصـفة كـهربـائـية.

يجـب تـوصـيل كـل أسـلاك الكـهربـاء فـي مخـارج كـهربـاء ذات تـوصـيلات أسـلاك وتـوصـيلات أرضـية صحيـحة
يجـب تـوصـيل أي جـهاز سـيتم الحـاقه بـهذا المـنتج فـي مخارج كـهربـاء ذات تـوصـيلات أسـلاك صحيحة.

وإن أمـكن يـجب اسـتخدام يـد واحـدة فـقط فـي تـوصـيل أو فصـل أسلاك الإشـارة.

لا تحـاول تشغـيل أي جـهاز إذا كـان هنـاك أثـر لحـرق أو مـياه أو تـلف بالمكـونـات
يجـب فصـل أسـلاك الكـهربـاء وأنـظمة الاتصـالات وشـبكات الاتصـال وأجـهزة المـودم الملحـقة قـبل فـتح أغطية الجهاز، مـالـم يـتم طـلب خـلاف ذلك فـي التـعليـمات الخـاصة بالتـركيب والتـوصـيف.
قم بتوصيل وفصل الأسلاك كما هو موضح في الجدول التالي وذلك عند القيام بعمليات التركيب أو النقل أو فتح أغطية هذا المنتج أو الأجهزة الملحقة.

للتوصيل:	للفصل:
قم بإيقاف كل شيء.	قم بإيقاف كل شيء.
أولا، قم بتوصيل كل الأسلاك بالأجهزة.	أولا، قم بفصل كل أسلاك الكهرباء من المخرج.
قم بتوصيل أسلاك الإشارة في لموصلات.	قم بفصل أسلاك الإشارة من الموصلات.
قم بتوصيل أسلاك الكهرباء في المخارج.	قم بفصل كل الأسلاك من الأجهزة.
قم بتشغيل الجهاز.	



تنبيـــه :

اذا كان النظام الخاص يستخدم معه بطارية ليثيوم قم باستبدالها بنفس النوع الذي تم صناعته من خلال نفس المصنع. تحتوي البطارية على مادة الليثيوم ويمكن أن تنفجرفي حالة عدم استخدامها أو التعامل معها بطريقة صحيحة أو عند التخلص منها بطريقة خطأ.

لا تقم بـــ:

- **القاء البطارية أو غمرها في الماء**
- **تسخينها أعلى من ١٠٠ درجة مئوية°و(٢١٢ ° فهرنـهيت)**
- **بتصليحها أو فكها**

تخلص من البطارية طبقا للقانون أو النظام المحلي .



تنبيـــه :
أثناء تركيب منتجات ليزر (مثل CD-ROMsأو وحدة تشغيل DVDأو أجهزة Fiber Optic أو وحدات الارسال) يجب مراعاة الآتي:

لا تنزع الأغطية. قد ينتج عن نزع أغطية منتج الليزر انفجار أشعة الليزر شديدة الخطورة.
لا يوجد أجزاء يمكن تغييرها داخل الجهاز. قد ينتج عن استخدام تحكمات أو تعديلات أو عمل أي تصرفات أخرى تخالف ما هو محددا هنا الى انفجار أشعة شديدة الخطورة.



خطـــر

تحتوى بعض منتجات الليزر على الفئة دايود ليزر مدمج من الفئة Class 3Aأو Class 3B. يجب مراعاة الآتي .

أشعة الليزر عند الفتح. لا تحدق الى الاشعاع و لا تنظر اليه مباشرة بواسطة أي أجهزة مرئية وتجنب التعرض المباشر للاشعاع .



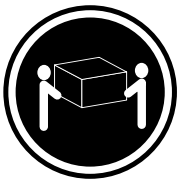

≥18 kg (37 lb)

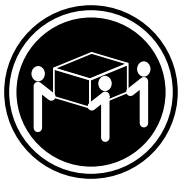

≥32 kg (70.5 lb)

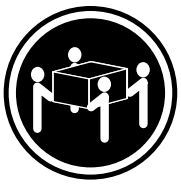

≥55 kg (121.2 lb)

تنبيه :
يجب استخدام ممارسات آمنة عند الرفع



تنبيـــه :
لا يقم زر التحكم في التشغيل الموجود على الجهاز والمفتاح الكهربائي الموجود على لوحة التحكم بايقاف التيار الكهربائي المار بالجهاز. قد يكون للجهاز أكثر من سلك كهربائي واحد. لايقاف التيار الكهربائي المار بالجهاز، تأكد من فصل جميع أسلاك الكهرباء من مصدر الكهرباء .

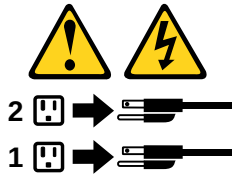



PERIGO

A corrente elétrica proveniente de cabos de alimentação, de telefone e de comunicações é perigosa.

Para evitar risco de choque elétrico:

- Não conecte nem desconecte nenhum cabo ou execute instalação, manutenção ou reconfiguração deste produto durante uma tempestade com raios.
- Conecte todos os cabos de alimentação a tomadas elétricas corretamente instaladas e aterradas.
- Todo equipamento que for conectado a este produto deve ser conectado a tomadas corretamente instaladas.
- Quando possível, utilize apenas uma das mãos para conectar ou desconectar cabos de sinal.
- Nunca ligue nenhum equipamento quando houver evidência de fogo, água ou danos estruturais.
- Antes de abrir tampas de dispositivos, desconecte cabos de alimentação, sistemas de telecomunicação, redes e modems conectados, a menos que especificado de maneira diferente nos procedimentos de instalação e configuração.
- Conecte e desconecte os cabos conforme descrito na tabela apresentada a seguir ao instalar, mover ou abrir tampas deste produto ou de dispositivos conectados.

Para Conectar:	**Para Desconectar:**
1. DESLIGUE Tudo. 2. Primeiramente, conecte todos os cabos aos dispositivos. 3. Conecte os cabos de sinal aos conectores. 4. Conecte os cabos de alimentação às tomadas. 5. LIGUE os dispositivos.	1. DESLIGUE Tudo. 2. Primeiramente, remova os cabos de alimentação das tomadas. 3. Remova os cabos de sinal dos conectores. 4. Remova todos os cabos dos dispositivos.



CUIDADO:

Se o seu sistema possui um módulo com uma bateria de lítio, substitua-o apenas por um módulo do mesmo tipo e do mesmo fabricante. A bateria contém lítio e pode explodir se não for utilizada, manuseada ou descartada de maneira correta.

Não:

- Jogue ou coloque na água
- Aqueça a mais de 100°C (212°F)
- Conserte nem desmonte

Descarte a bateria conforme requerido pelas leis ou regulamentos locais.



PRECAUCIÓN:

Quando produtos a laser (como unidades de CD-ROMs, unidades de DVD-ROM, dispositivos de fibra ótica ou transmissores) estiverem instalados, observe o seguinte:

- Não remova as tampas. A remoção das tampas de um produto a laser pode resultar em exposição prejudicial à radiação de laser. Não existem peças que podem ser consertadas no interior do dispositivo.
- A utilização de controles ou ajustes ou a execução de procedimentos diferentes dos especificados aqui pode resultar em exposição prejudicial à radiação.

PERIGO

Alguns produtos a laser contêm diodo de laser integrado da Classe 3A ou da Classe 3B. Observe o seguinte:

Radiação a laser quando aberto. Não olhe diretamente para o feixe a olho nu ou com instrumentos ópticos e evite exposição direta ao feixe.



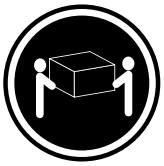

≥18 kg (37 lb)



≥32 kg (70.5 lb)



≥55 kg (121.2 lb)

CUIDADO:

Utilize procedimentos de segurança para levantar equipamentos.



CUIDADO:

O botão de controle de alimentação do dispositivo e o botão para ligar/desligar da fonte de alimentação não desligam a corrente elétrica fornecida ao dispositivo. O dispositivo também pode ter mais de um cabo de alimentação. Para remover toda a corrente elétrica do dispositivo, assegure que todos os cabos de alimentação estejam desconectados da fonte de alimentação.

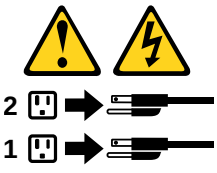



危险

电源、电话和通信电缆中的电流是危险的。

为避免电击危险：

- 请勿在雷电期间连接或断开任何电缆的连接，或者对本产品进行安装、维护或重新配置。
- 将所有电源线连接到正确连线和妥善接地的电源插座。
- 将所有要连接到该产品的设备连接到正确连线的插座。
- 如果可能，请仅使用一只手来连接或断开信号电缆的连接。
- 切勿在有火、水、结构损坏迹象的情况下开启任何设备。
- 在打开设备外盖之前请断开已连接的电源线、远程通信系统、网络和调制解调器，除非在安装和配置过程中另有说明。
- 当安装、移动或打开该产品或连接设备的外盖时，请按照下表所述来连接或断开电缆的连接。

要连接	要断开连接
1. 切断所有电源。 2. 首先将所有电缆连接到设备。 3. 将信号电缆连接到接口。 4. 将电源线连接到插座。 5. 开启设备。	1. 切断所有电源。 2. 首先从插座上拔出电源线。 3. 从接口上拔出信号电缆。 4. 从设备上拔出所有电缆。



警告：
如果您的系统有包含锂电池的模块,请仅使用同一制造商生产的相同模块类型来替换该模块。
该电池中含有锂，如果使用、操作或处理不当，可能会发生爆炸。

切勿：

- 投入或浸入水中
- 加热到 100°C（212°F）以上
- 维修或拆卸

请按照当地法令或条例的要求处理电池。



警告：
安装激光产品（例如 CD-ROM、DVD-ROM 驱动器、光纤设备或发射设备）时，请注意以下声明：

- 请勿卸下外盖。卸下激光产品的外盖可能导致遭受激光辐射的危险。该设备内没有可维修的部件。
- 如果不按照此处指定的过程进行控制、调整或操作，则有可能导致遭受辐射的危险。



危险

某些激光产品包含嵌入式 3A 类或 3B 类激光二极管。请注意以下声明：

打开后有激光辐射。请勿注视光束，请勿直接用光学仪器查看，并请避免直接暴露在光束中。





≥18 千克（37 磅）



≥32 千克（70.5 磅）



≥55 千克（121.2 磅）

警告：
抬起时请采取安全措施。



警告：
设备上的电源控制按钮和电源上的电源开关不会切断供给该设备的电流。该设备还可能有多条电源线。要切断该设备的所有电流，请确保所有电源线都与电源断开连接。

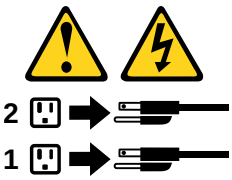



危險

電源、電話及通訊纜線上的電流都具有危險性。
若要避免觸電危險：
- 請勿在雷雨期間，連接或拔除纜線、執行安裝、維護或重新配置本產品。
- 將所有電源線連接到正確配線及接地的電源插座。
- 任何與本產品連接的設備都必須連接到配線妥當的電源插座。
- 請盡可能用單手連接或拔除信號線。
- 發生火災、水災或結構損害時，絕對不要開啟任何設備。
- 除非在安裝及配置程序中另有指示，否則在開啟裝置機蓋之前，請拔掉連接的電源線、電信系統、網路及數據機。
- 安裝、移動或開啟本產品或附屬裝置的機蓋時，請遵循下列說明連接及拔掉纜線。

連線	切斷連線
1. 關閉所有開關。 2. 首先，連接所有接線到裝置。 3. 連接信號線到接頭。 4. 連接電源線到插座。 5. 開啟裝置。	1. 關閉所有開關。 2. 首先，拔掉插座上的電源線。 3. 拔掉接頭上的信號線。 4. 拔掉裝置上所有接線。



警告：
如果您的系統中含有鋰電池模組，請僅使用同一家製造商所生產的相同模組進行更換。
如果未以正確方式使用、處理或棄置含鋰的電池，會有爆炸的危險。
請勿：

- 沾溼或浸入水中
- 置於 **100°C (212°F)** 以上的高溫環境
- 修理或拆開

請按照各地區有關廢棄電池的法令和規定處理舊電池。



警告：
- 請勿移除機蓋。移除雷射產品的機蓋，可能會導致暴露在危險的雷射輻射中。裝置內部並無可自行維修的零件。
- 利用或執行非本文中所指定的控制、調整及執行程序，可能會導致危險的輻射外洩。



危險

部分雷射產品含有內嵌式 **Class 3A** 或 **Class 3B** 雷射二極體。請注意下列事項：
在開啟光碟機時，會發生雷射輻射。請勿直視光束或用光學儀器直接檢視，並避免直接暴露在光束中。





≥ 18 公斤（37 磅） ≥ 32 公斤（70.5 磅） ≥ 55 公斤（121.2 磅）

警告：
搬運時請注意安全。



警告：
裝置上的電源控制按鈕及電源供應器上的電源開關，無法關閉裝置所產生的電流。
該裝置可能有多條電源線。若要除去裝置流出的所有電流，請確認已切斷所有電源線的電源。

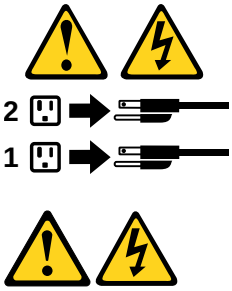

DANGER

Le courant électrique provenant de l'alimentation, du téléphone et des câbles de transmission peut présenter un danger.

Pour éviter tout risque de choc électrique :

- Ne manipulez aucun câble et n'effectuez aucune opération d'installation, d'entretien ou de reconfiguration de ce produit au cours d'un orage.
- Branchez tous les cordons d'alimentation sur un socle de prise de courant correctement câblé et mis à la terre.
- Branchez sur des socles de prise de courant correctement câblés tout équipement connecté à ce produit.
- Lorsque cela est possible, n'utilisez qu'une seule main pour connecter ou déconnecter les câbles d'interface.
- Ne mettez jamais un équipement sous tension en cas d'incendie ou d'inondation, ou en présence de dommages matériels.
- Avant de retirer les carters de l'unité, mettez celle-ci hors tension et déconnectez ses cordons d'alimentation, ainsi que les câbles qui la relient aux réseaux, aux systèmes de télécommunication et aux modems (sauf instruction contraire mentionnée dans les procédures d'installation et de configuration).
- Lorsque vous installez, que vous déplacez, ou que vous manipulez le présent produit ou des périphériques qui lui sont raccordés, reportez-vous aux instructions ci-dessous pour connecter et déconnecter les différents cordons.

Connexion	Déconnexion
1. Mettez les unités HORS TENSION. 2. Commencez par brancher tous les cordons sur les unités. 3. Branchez les câbles d'interface sur des connecteurs. 4. Branchez les cordons d'alimentation sur des prises. 5. Mettez les unités SOUS TENSION.	1. Mettez les unités HORS TENSION. 2. Débranchez les cordons d'alimentation des prises. 3. Débranchez les câbles d'interface des connecteurs. 4. Débranchez tous les câbles des unités.



ATTENTION:

Si votre système est doté d'un module contenant une pile au lithium, vous devez le remplacer uniquement par un module identique, produit par le même fabricant. La pile contient du lithium et peut exploser en cas de mauvaise utilisation, de mauvaise manipulation ou de mise au rebut inappropriée.

Ne pas :

- **la jeter à l'eau,**
- **l'exposer à des températures supérieures à 100°C,**
- **chercher à la réparer ou à la démonter.**

Ne pas mettre la pile à la poubelle. Pour la mise au rebut, se reporter à la réglementation en vigueur.



ATTENTION:

Si des produits à laser (tels que des unités de CD-ROM, de DVD-ROM, des unités à fibres optiques, ou des émetteurs) sont installés, prenez connaissance des informations suivantes :

- **Ne retirez pas le carter. En ouvrant l'unité de CD-ROM ou de DVD-ROM, vous vous exposez au rayonnement dangereux du laser. Aucune pièce de l'unité n'est réparable.**
- **Pour éviter tout risque d'exposition au rayon laser, respectez les consignes de réglage et d'utilisation des commandes, ainsi que les procédures décrites dans le présent manuel.**



DANGER

Certains produits à laser contiennent une diode à laser intégrée de classe 3A ou 3B. Prenez connaissance des informations suivantes:

Rayonnement laser lorsque le carter est ouvert. Evitez toute expositiondirecte au rayon laser. Evitez de regarder fixement le faisceau ou del'observer à l'aide d'instruments optiques.



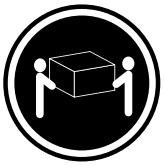

≥18 kg (37 lb)



≥32 kg (70.5 lb)



≥55 kg (121.2 lb)

ATTENTION:

Soulevez la machine avec précaution.



ATTENTION:

L'interrupteur de contrôle d'alimentation de l'unité et l'interrupteur dubloc d'alimentation ne coupent pas le courant électrique alimentantl'unité. En outre, le système peut être équipé de plusieurs cordonsd'alimentation. Pour mettre l'unité hors tension, vous devez déconnectertous les cordons de la source d'alimentation.

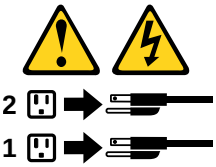



VORSICHT

An Netz-, Telefon- und Datenleitungen können gefährliche Spannungen anliegen.

Aus Sicherheitsgründen:

- **Bei Gewitter an diesem Gerät keine Kabel anschließen oder lösen. Ferner keine Installations-, Wartungs- oder Rekonfigurationsarbeiten durchführen.**
- **Gerät nur an eine Schutzkontaktsteckdose mit ordnungsgemäß geerdetem Schutzkontakt anschließen.**
- **Alle angeschlossenen Geräte ebenfalls an Schutzkontaktsteckdosen mit ordnungsgemäß geerdetem Schutzkontakt anschließen.**
- **Die Signalkabel nach Möglichkeit einhändig anschließen oder lösen, um einen Stromschlag durch Berühren von Oberflächen mit unterschiedlichem elektrischem Potenzial zu vermeiden.**

- **Geräte niemals einschalten, wenn Hinweise auf Feuer, Wasser oder Gebäudeschäden vorliegen.**
- **Die Verbindung zu den angeschlossenen Netzkabeln, Telekommunikationssystemen, Netzwerken und Modems ist vor dem Öffnen des Gehäuses zu unterbrechen, sofern in den Installations- und Konfigurationsprozeduren keine anders lautenden Anweisungen enthalten sind.**
- **Zum Installieren, Transportieren und Öffnen der Abdeckungen des Computers oder der angeschlossenen Einheiten die Kabel gemäß der folgenden Tabelle anschließen und abziehen.**

Zum Anschließen der Kabel gehen Sie wie folgt vor	Zum Abziehen der Kabel gehen Sie wie folgt vor
1. Schalten Sie alle Einheiten AUS. 2. Schließen Sie erst alle Kabel an die Einheiten an. 3. Schließen Sie die Signalkabel an die Buchsen an. 4. Schließen Sie die Netzkabel an die Steckdose an. 5. Schalten Sie die Einheit EIN.	1. Schalten Sie alle Einheiten AUS. 2. Ziehen Sie zuerst alle Netzkabel aus den Netzsteckdosen. 3. Ziehen Sie die Signalkabel aus den Buchsen. 4. Ziehen Sie alle Kabel von den Einheiten ab.



CAUTION:

Enthält das System ein Modul mit einer Lithiumbatterie, dieses nur durch ein Modul desselben Typs und von demselben Hersteller ersetzen. Die Batterie enthält Lithium und kann bei unsachgemäßer Verwendung, Handhabung oder Entsorgung explodieren.

Die Batterie nicht:

- mit Wasser in Berührung bringen.
- über 100 C erhitzen.
- reparieren oder zerlegen.

Die örtlichen Bestimmungen für die Entsorgung von Sondermüll beachten.



ACHTUNG:

Bei der Installation von Lasergeräten (wie CD-ROM-Laufwerken, DVD- aufwerken, Einheiten mit Lichtwellenleitertechnik oder Sendern) Folgendes beachten:

- **Die Abdeckungen nicht entfernen. Durch Entfernen der Abdeckungen des Lasergeräts können gefährliche Laserstrahlungen freigesetzt werden. Das Gerät enthält keine zu wartenden Teile.**
- **Werden Steuerelemente, Einstellungen oder Durchführungen von Prozeduren anders als hier angegeben verwendet, kann gefährliche Laserstrahlung auftreten.**



VORSICHT

Einige Lasergeräte enthalten eine Laserdiode der Klasse 3A oder 3B. Beachten Sie Folgendes:

Laserstrahlung bei geöffneter Verkleidung. Nicht in den Strahl blicken. Keine Lupen oder Spiegel verwenden. Strahlungsbereich meiden.





≥18 kg ≥32 kg ≥55 kg

ACHTUNG:

Arbeitsschutzrichtlinien beim Anheben der Maschine beachten.



ACHTUNG:

Mit dem Netzschalter an der Einheit und am Netzteil wird die Stromversorgung für die Einheit nicht unterbrochen. Die Einheit kann auch mit mehreren Netzkabeln ausgestattet sein. Um die Stromversorgung für die Einheit vollständig zu unterbrechen, müssen alle zum Gerät führenden Netzkabel vom Netz getrennt werden.

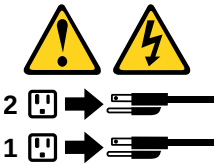



סכנה

זרם חשמלי המועבר בכבלי חשמל, טלפון ותקשורת הוא מסוכן.

כדי להימנע מסכנת התחשמלות:

- אל תחברו או תנתקו כבלים, ואל תבצעו פעולת התקנה, תחזוקה או שינוי תצורה במוצר זה במהלך סופת ברקים.
- חברו את כל כבלי החשמל לשקע חשמל מחווט ומוארק כהלכה.
- חברו כל ציוד שיחובר למוצר זה לשקעי חשמל מחווטים כהלכה.
- במידת האפשר, השתמשו ביד אחת בלבד לחיבור או לניתוק של כבלי אותות.
- לעולם אל תפעילו ציוד כלשהו כאשר יש עדות לנזק מבני או לנזק כתוצאה מאש או ממים.
- נתקו את כבלי החשמל, מערכות התקשורת, התקני הרשת והמודמים המחוברים לפני פתיחת כיסויי ההתקן, אלא אם הליכי ההתקנה וקביעת התצורה מורים אחרת.
- בעת התקנה, העברה או פתיחת כיסויים במוצר זה או בהתקנים המחוברים, חברו ונתקו את הכבלים כמתואר בטבלה שלהלן.

כדי לחבר	כדי לנתק
1. כבו הכל. 2. ראשית, חברו את כל הכבלים להתקנים. 3. חברו את כבלי האותות למחברים. 4. חברו את כבלי החשמל לשקעים. 5. הפעילו את ההתקן.	1. כבו הכל. 2. ראשית, נתקו את כבלי החשמל מהשקעים. 3. נתקו את כבלי האותות מהמחברים. 4. הסירו את כל הכבלים מההתקנים.



זהירות:
אם המערכת כוללת מודול המכיל סוללת ליתיום, החליפו אותו רק במודול מאותו סוג ומתוצרת אותו יצרן. הסוללה מכילה ליתיום, ועלולה להתפוצץ אם לא משתמשים ומטפלים בה או משליכים אותה כיאות.

לעולם:

- אל תטבלו במים
- אל תחממו לטמפרטורה הגבוהה מ-$100^{o}C$ ($212^{o}F$)
- אל תתקנו או תפרקו

השליכו את הסוללה כנדרש לפי התקנות והחוקים המקומיים.



זהירות:
בעת התקנת מוצרי לייזר (כגון כונני תקליטורים ו-DVD, התקני סיב אופטי או משדרים), שימו לב לאזהרות הבאות:

- אל תסירו את הכיסויים. הסרת הכיסויים של מוצר הלייזר עלולה לגרום לחשיפה לקרינת לייזר מסוכנת. אין חלקים ברי טיפול בתוך ההתקן.
- שינויים, שימוש בבקרות או ביצוע הליכים אחרים מאלה המתוארים כאן, עלולים לגרום לחשיפה לקרינה מסוכנת.



סכנה

מוצרי לייזר מסוימים מכילים דיודת לייזר מסוג Class 3A או Class 3B. שימו לב לאזהרה הבאה:

כאשר הוא פתוח, המוצר פולט קרינת לייזר. אל תביטו ישירות בקרן, אל תביטו ישירות בעזרת ציוד אופטי, והימענו מחשיפה לקרן.



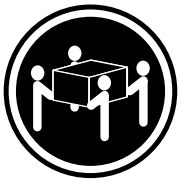

≥ 55 ק"ג (121.2 ליב')



≥ 32 ק"ג (70.5 ליב')

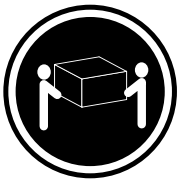

≥ 18 ק"ג (37 ליב')

זהירות:
השתמשו בהליכים
הנאותים בעת
הרמת הציוד.





זהירות:
לחצן ההפעלה של ההתקן ומתג ההפעלה של ספק החשמל אינם מפסיקים את זרם החשמל המסופק להתקן. בנוסף, ההתקן עשוי לכלול יותר מכבל חשמל אחד. כדי לסלק את כל הזרם החשמלי מההתקן, ודאו שכל כבלי החשמל מנותקים ממקור החשמל.

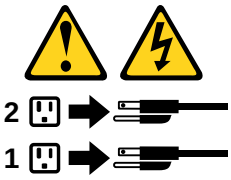



PERICOLO

La corrente elettrica proveniente dai cavi di alimentazione, del telefono e di comunicazione può essere pericolosa.

Per evitare il rischio di scosse elettriche:

- **Non collegare o scollegare qualsiasi cavo oppure effettuare l'installazione, la manutenzione o la riconfigurazione del prodotto durante un temporale.**
- **Collegare tutti i fili elettrici a una presa di alimentazione correttamente cablata e dotata di messa a terra.**
- **Collegare alle prese elettriche appropriate tutte le apparecchiature che verranno utilizzate per questo prodotto.**
- **Se possibile, utilizzare solo una mano per collegare o scollegare i cavi di segnale.**
- **Non accendere assolutamente apparecchiature in presenza di incendi, perdite d'acqua o danno strutturale.**
- **Scollegare i cavi di alimentazione, i sistemi di telecomunicazione, le reti e il modem prima di aprire i coperchi del dispositivo, salvo istruzioni contrarie relative alle procedure di installazione e configurazione.**
- **Collegare e scollegare i cavi come descritto nella seguente tabella quando vengono effettuate operazioni di installazione, spostamento o apertura dei coperchi di questo prodotto o delle unità collegate.**

Per collegarsi	Per scollegarsi
1. SPEGNERE le apparecchiature. 2. Innanzitutto, collegare tutti i cavi alle unità. 3. Collegare i cavi di segnale ai connettori. 4. Collegare i cavi di alimentazione alla presa. 5. Accendere l'unità.	1. SPEGNERE le apparecchiature. 2. Innanzitutto, rimuovere i cavi di alimentazione dalla presa. 3. Rimuovere i cavi di segnale dai connettori. 4. Rimuovere tutti i cavi dalle unità.



ATTENZIONE:

Se sul sistema è presente un modulo che contiene una batteria al litio, sostituirlo solo con un tipo di modulo dello stesso tipo della stessa casa di produzione. La batteria contiene litio e può esplodere se usata, maneggiata o smaltita in modo non corretto.

Non:

- **Gettare o immergere la batteria nell'acqua**
- **Riscaldarla ad una temperatura superiore ai 100 gradi C (212 gradi F)**
- **Smontarla, ricaricarla o tentare di ripararla**

Le batterie usate vanno smaltite in accordo alla normativa in vigore (DPR 915/82 e successive disposizioni e disposizioni locali).



ATTENZIONE:

Quando vengono installati prodotti laser (quali CD-ROM, unità DVD-ROM, unità a fibre ottiche o trasmittenti), tener presente quanto segue:

- **Non rimuovere gli sportelli. L'apertura di un'unità laser può determinare l'esposizione a radiazioni laser pericolose. All'interno dell'unità non vi sono parti su cui effettuare l'assistenza tecnica.**
- **L'utilizzo di controlli, regolazioni o l'esecuzione di procedure non descritti nel presente manuale possono provocare l'esposizione a radiazioni pericolose.**



PERICOLO

Alcune unità laser contengono un diodo laser di Classe 3A o Classe 3B. Tener presente quanto segue:

Aprendo l'unità vengono emesse radiazioni laser. Non fissare il fascio, non guardarlo direttamente con strumenti ottici ed evitare l'esposizione al fascio.





≥18 kg ≥32 kg ≥55 kg

ATTENZIONE:

Prestare attenzione nel sollevare l'apparecchiatura.



ATTENZIONE:

Il pulsante di controllo dell'alimentazione presente sull'unità e l'interruttore dell'alimentatore non disattivano l'alimentazione corrente fornita all'unità. E' possibile che l'unità disponga di più cavi di alimentazione. Per disattivare l'alimentazione dall'unità, accertarsi che tutti i cavi di alimentazione siano scollegati dalla fonte di alimentazione.

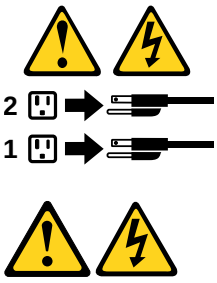

위험

전원, 전화, 통신 케이블의 전류는 위험합니다.

감전의 위험을 피하려면 다음과 같이 하십시오.

- 번개가 치는 날에는 케이블을 연결 또는 분리하거나 본 제품을 설치, 보수, 재구성하지 마십시오.

- 모든 전원 코드는 올바르게 접지된 전기 콘센트에 연결하십시오.

- 본 제품에 연결될 장치는 올바르게 배선된 콘센트에 연결하십시오.

- 신호 케이블을 연결 또는 분리할 때 가능하면 한 손만을 사용하십시오.

- 불 또는 물로 인한 손상이나 구조적인 손상이 있을 경우 장치의 전원을 절대 켜지 마십시오.

- 설치 및 구성 과정에 별도의 지시 사항이 없는 경우, 장치의 덮개를 열기 전에 연결된 전원 코드, 원격 통신 시스템, 네트워크, 모뎀을 분리하십시오.

- 본 제품이나 연결된 장치를 설치, 이동하거나 덮개를 열 때 다음 표와 같은 순서로 케이블을 연결하거나 분리하십시오.

연결할 때:	분리할 때:
1. 모든 장치의 전원을 끄십시오. 2. 먼저 모든 케이블을 장치에 연결하십시오. 3. 커넥터에 신호 케이블을 연결하십시오. 4. 콘센트에 전원 코드를 연결하십시오. 5. 장치의 전원을 켜십시오.	1. 모든 장치의 전원을 끄십시오. 2. 먼저 콘센트에서 전원 코드를 분리하십시오. 3. 커넥터에서 신호 케이블을 분리하십시오. 4. 장치에서 모든 케이블을 분리하십시오.



주의:
사용자의 시스템이 리튬 배터리를 포함하는 모듈일 경우, 동일한 제조업체에서 동일한 모듈 유형으로 생산된 제품으로 교체하십시오. 배터리에는 리튬이 함유되어 있어 잘못 사용, 취급 또는 폐기할 경우 폭발의 위험이 있습니다.

사고를 방지하려면 다음 사항을 준수하십시오.

- 배터리를 물 속에 던지거나 침수시키지 마십시오.

- 100℃(212°F) 이상 가열하지 마십시오.

- 수리하거나 분해하지 마십시오.

배터리를 폐기할 때는 법령 또는 회사의 안전 수칙에 따라 폐기하십시오.



주의:
CD-ROM, DVD-ROM 장치, 광섬유 장치 또는 송신 장치와 같은 레이저 제품을 설치할 때, 다음과 같은 취급 주의사항을 참고하십시오.

- 덮개를 열지 마십시오. 덮개를 열면 레이저 복사 에너지에 노출될 위험이 있습니다. 장치 내부에는 사용자가 조정하거나 수리할 수 있는 부품이 없습니다.

- 규정된 것 이외의 절차 수행, 제어 조정 등의 행위로 인해 해로운 레이저 복사에 노출될 수 있습니다.



위험

일부 장비에는 임베디드 클래스 3A 또는 클래스 3B 레이저 다이오드가 있습니다. 다음 주의사항에 유의하십시오.

드라이브가 열리면 레이저 복사 에너지가 방출됩니다. 광선이 눈에 직접 쏘이지 않도록 하십시오. 나안 또는 광학 기구를 착용한 상태에서 광선을 직접 바라보지 않도록 하십시오.



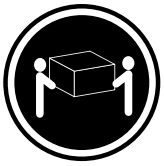

≥18 kg (37 lbs)



≥32 kg (70.5 lbs)



≥55 kg (121.2 lbs)

주의:
제품을 들어 올릴 때
안전 규제를 따르십시오.



주의:
장치의 전원 제어 버튼 및 전원 공급 장치의 전원 스위치를 사용하여 장치에 공급되는 전기를 차단하지 마십시오. 장치는 둘 이상의 코드를 가지고 있을 수 있습니다. 장치에서 모든 전원을 차단하려면 콘센트에서 코드가 모두 분리되어 있는지 확인하십시오.

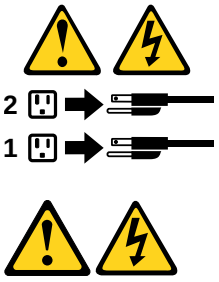

PELIGRO

La corriente eléctrica procedente de cables de alimentación, teléfonos y cables de comunicación puede ser peligrosa.

Para evitar el riesgo de descarga eléctrica:

- **No conecte ni desconecte los cables ni realice ninguna tarea de instalación, mantenimiento o reconfiguración de este producto durante una tormenta eléctrica.**
- **Conecte todos los cables de alimentación a tomas de corriente debidamente cableadas y conectadas a tierra.**
- **Cualquier equipo que se conecte a este producto también debe conectarse a tomas de corriente debidamente cableadas.**

- **Siempre que sea posible, utilice una sola mano para conectar o desconectar los cables de señal.**
- **No encienda nunca un equipo cuando hay señales de fuego, agua o daños estructurales.**
- **Desconecte los cables de alimentación, los sistemas de telecomunicaciones, las redes y los módems conectados antes de abrir las cubiertas de los dispositivos, a menos que se indique lo contrario en los procedimientos de instalación y configuración.**
- **Conecte y desconecte los cables, como se describe en la tabla siguiente, cuando instale, mueva o abra las cubiertas de este producto o de los dispositivos conectados.**

Para conectar	Para desconectar
1. APÁGUELO todo. 2. En primer lugar, conecte todos los cables a los dispositivos. 3. Conecte los cables de señal a los conectores. 4. Enchufe los cables de alimentación a las tomas de corriente. 5. Encienda el dispositivo.	1. APÁGUELO todo. 2. En primer lugar, desenchufe los cables de alimentación de las tomas de corriente. 3. Desconecte los cables de señal de los conectores. 4. Desconecte todos los cables de los dispositivos.



PRECAUCIÓN:

Si su sistema dispone de un módulo que contiene una batería de litio, reemplácelo sólo con el mismo tipo de módulo, del mismo fabricante. La batería contiene litio y puede explotar si no se utiliza, manipula o desecha correctamente.

No debe:

- **Arrojarla al agua o sumergirla en ella**
- **Exponerla a temperaturas superiores a 100°C (212°F)**
- **Repararla o desmontarla**

Deshágase de la batería según especifiquen las leyes o normas locales.



PRECAUCIÓN:

Cuando haya productos láser (como unidades de CD-ROM, unidades de DVD, dispositivos de fibra óptica o transmisores) instalados, tenga en cuenta lo siguiente:

- **No quite las cubiertas. Si quita las cubiertas del producto láser, podría quedar expuesto a radiación láser peligrosa. Dentro del dispositivo no existe ninguna pieza que requiera servicio técnico.**
- **Si usa controles o ajustes o realiza procedimientos que no sean los especificados aquí, podría exponerse a radiaciones peligrosas.**



PELIGRO

Algunos productos láser tienen incorporado un diodo láser de clase 3A o clase 3B. Tenga en cuenta lo siguiente:

Cuando se abre, queda expuesto a radiación láser. No mire directamente al rayo láser, ni siquiera con instrumentos ópticos, y evite exponerse directamente al rayo láser.





≥18 kg



≥32 kg



≥55 kg

PRECAUCIÓN:

Adopte procedimientos seguros al levantar el equipo.



PRECAUCIÓN:

El botón de control de alimentación del dispositivo y el interruptor de alimentación de la fuente de alimentación no desconectan la corriente eléctrica suministrada al dispositivo. Además, el dispositivo podría tener más de un cable de alimentación. Para suprimir toda la corriente eléctrica del dispositivo, asegúrese de que todos los cables de alimentación estén desconectados de la toma de corriente.

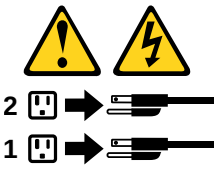

Chapter 2. Important service information

Strategy for replacing FRUs

Before replacing parts:

Ensure that all software fixes, drivers, and UEFI BIOS downloads are installed before you replace any FRUs listed in this manual.

After a system board is replaced, ensure that the latest UEFI BIOS is loaded to the system board before you complete the service action.

To download and install software fixes, drivers, and UEFI BIOS, go to https://pcsupport.lenovo.com and follow the instructions on the screen.

Use the following strategy to prevent unnecessary expense for replacing and servicing FRUs:

- If you are instructed to replace a FRU but the replacement does not correct the problem, reinstall the original FRU before you continue.
- Some computers have both a processor board and a system board. If you are instructed to replace either the processor board or the system board, and replacing one of them does not correct the problem, reinstall that board, and then replace the other one.
- If an adapter or a device consists of more than one FRU, any of the FRUs might be the cause of the error. Before replacing the adapter or device, remove the FRUs, one by one, to see if the symptoms change. Replace only the FRU that changed the symptoms.

Strategy for replacing a hard disk drive or a solid-state drive

Always try to run a low-level format operation before replacing a hard disk drive or a solid-state drive. This will cause all customer data on the drive to be lost. Ensure that the customer has a current backup of the data before you perform this task.

Attention: The drive startup sequence in the computer you are servicing might have been changed. Be extremely careful during write operations such as copying, saving, or formatting. If you select an incorrect drive, data or programs can be overwritten.

Important notice for replacing a system board

Some components mounted on a system board are very sensitive. Improper handling of a system board can cause damage to those components, and may cause a system malfunction.

After replacing the system board, the recommended option is to download the latest UEFI BIOS package from Lenovo Support Web site to bind the model type, serial number, and Brand ID of the computer with the new system board. Or use Golden Key U1 tool to bind the new system board. Refer to https://support.lenovo.com/solutions/ht102004 for instructions.

Attention: When handling a system board:

- Do not drop a system board or apply any excessive force to it.
- Avoid rough handling of any kind.
- Avoid bending a system board and hard pushing to prevent cracking at each Ball Grid Array (BGA) chipset.

© Copyright Lenovo 2026

How to use error codes

Use the error codes displayed on the screen to diagnose failures. If more than one error code is displayed, begin the diagnosis with the first error code. Whatever causes the first error code might also cause false error codes. If no error code is displayed, see whether the error symptom is listed in the “Symptom-to-FRU Index” section.

Strategy for replacing FRUs for CTO, special-bid, and standard models

This topic provides information about the model types and FRU identification.

Product definition

This topic introduces different model types and how to identify each type.

Dynamic Configure To Order (CTO) model

This model provides the ability for a customer to configure a Lenovo solution from a Web site, and have this configuration sent to fulfillment, where it is built and shipped directly to the customer. The machine label and eSupport will load these products as the 4-character MT, 4-character model, and 2-character country code. The model is “CTO1” and the default country code is “WW” (example: 20AACTO1WW).

Special-bid model

This model is a unique configuration that has been negotiated between Lenovo and the customer. A unique MTM consists of a 4-character MT, a 4-character model, and a numeric 2-character country code is provided to the customer to place orders (example: 20AA000955). The country code assigned is numeric and does not designate a specific country or region. The custom model factsheet for the MTM indicates which country the special-bid MTM is set up for. Special-bid offering is not generally announced.

Standard model

Standard models (fixed configuration) are announced and offered to all customers. The MTM portion of the machine label consists of a 4-character MT, a 4-character model, and an alphabetic 2-character country code. The country code assigned is alphabetic and represents a designated country or region (example: 20AA0009UK).

FRU identification

To identify FRUs for a product, do the following:

1. Go to: https://support.lenovo.com/partslookup.
2. Type the Machine Type in the corresponding field to get a general FRU list, or type the Serial Number for more detailed FRU information.

Chapter 3. Product overview

Front

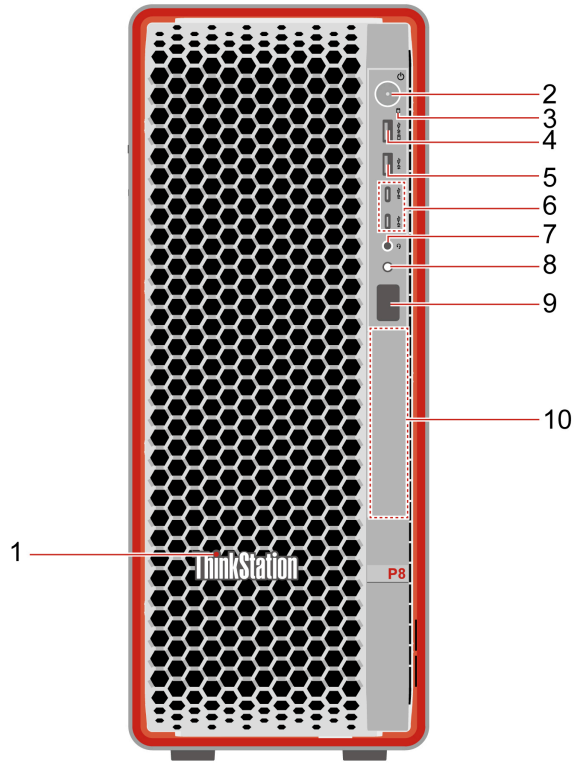

Item	Description	Item	Description
1	ThinkStation® LED	2	Power button with indicator
3	Storage indicator	4	USB-A connector (USB 10Gbps, Always On USB)*
5	USB-A connector (USB 10Gbps)*	6	USB-C® connectors (USB 10Gbps)*
7	Headset connector	8	Diagnostic panel button
9	Diagnostic panel	10	Front-access storage bay

* for selected models

© Copyright Lenovo 2026

Left

- Type-1

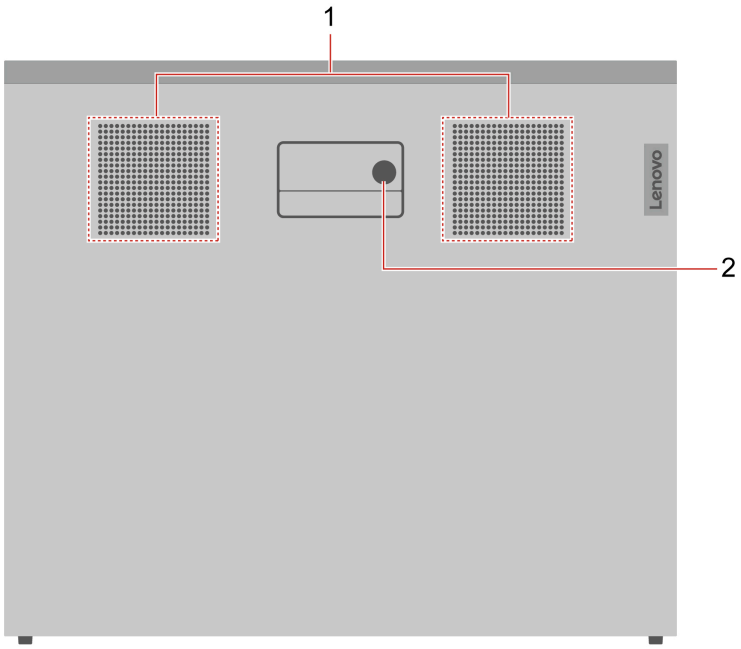

- Type-2

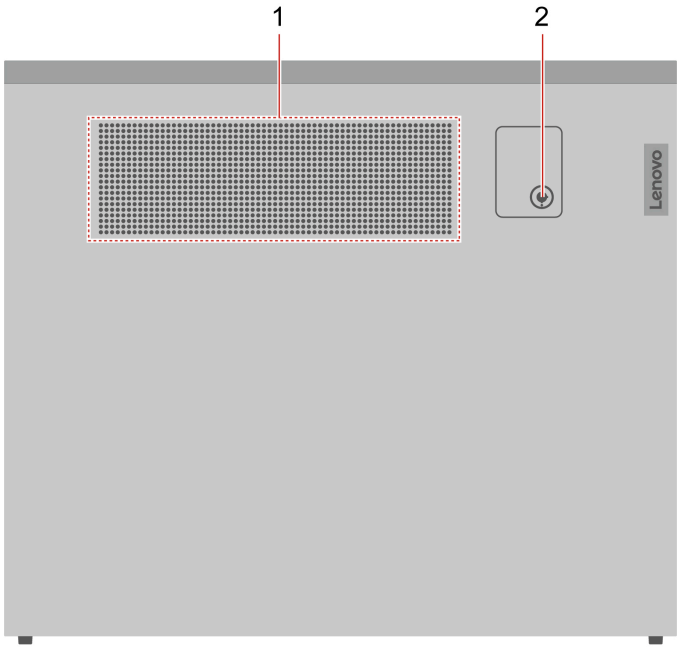

Item	Description	Item	Description
1	Side air vents	2	Lock for side cover*

* for selected models

Top

- Type-1



- Type-2

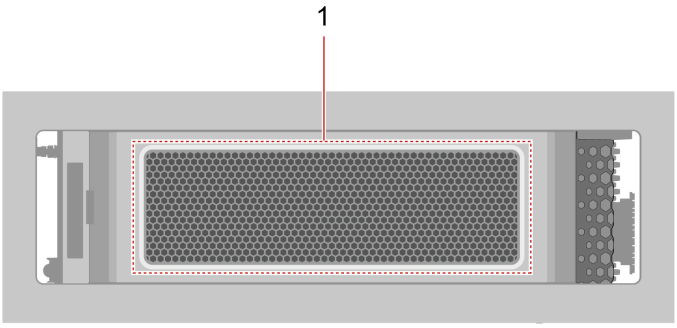

Item	Description
1	Top air vents*

* for selected models

Rear

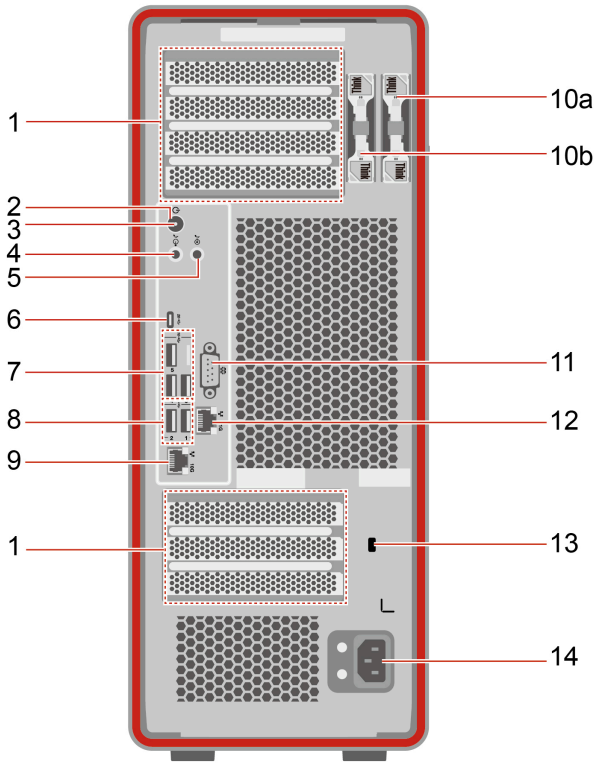

Item	Description	Item	Description
1	PCIe card areas	2	Power button
3	Power indicator	4	Audio line-out connector
5	Audio line-in connector	6	USB-C connector (USB 20Gbps)
7	USB-A connectors (USB 10Gbps)	8	USB-A connectors (Hi-Speed USB)
9	Ethernet connector (10G)	10a	Key-nest for side cover
10b	Key-nest for M.2 SSD storage box	11	Serial connector*
12	Ethernet connector (1G)	13	Security-lock slot
14	Power cord connector		

* for selected models

Expansion modules

You can enhance your computer capacity and performance by adding various devices to the expansion modules. The topic provides some details about the expansion modules available on this product.

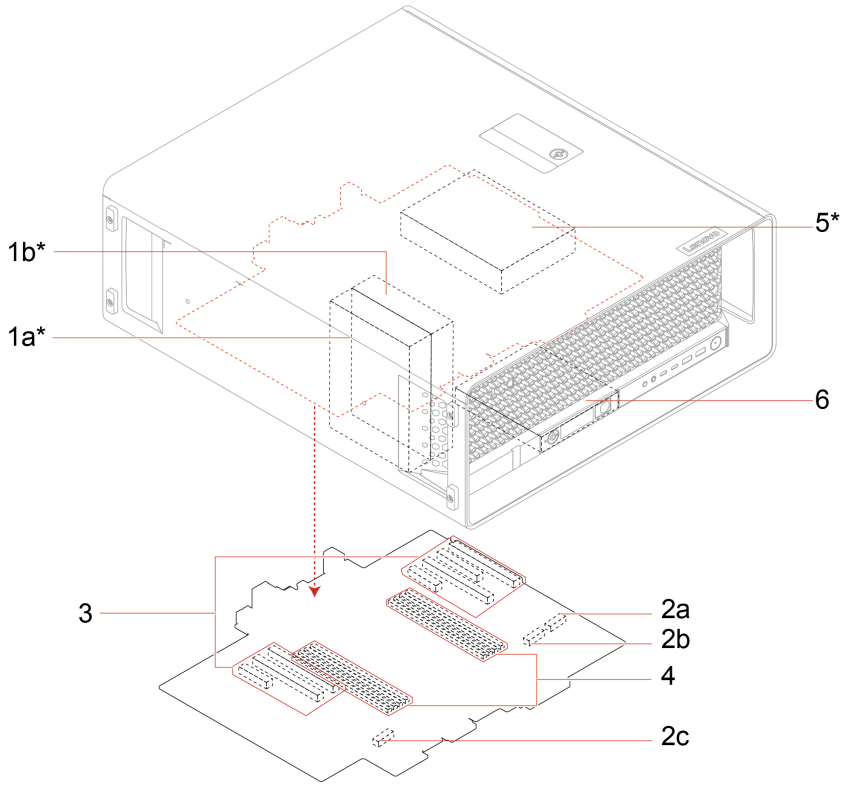

* for selected models

Location	Name	Description
1a, 1b	Internal storage drive cages*	• Each internal storage drive cage can support the following storage drives: – Up to one 3.5-inch HDD – Up to two M.2 SSD (Up to Gen 4) – Up to one U.2 or U.3 SSD (Up to Gen 5) • The storage drives installed in 1a and 1b should be the same. • Installation priority: 1a is the first and 1b is the second.
2a, 2b, 2c	On-board M.2 SSD slots	• Bus maximum generation: Gen 5 • Supported type: M.2 2280/22110 SSD **Note:** To install an M.2 22110 SSD, you need to buy a corresponding SSD heat sink kit from Lenovo. • Installation priority: 2a is the first, 2b is the second, and 2c is the third.

Location	Name	Description
3	PCIe slots	PCIe slot types and PCIe card installation priority are as follows. 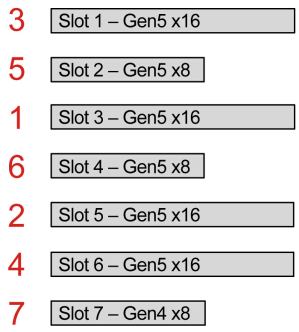 **Note:** See “PCIe card installation rule” on page 99 for more details.
4	Memory slots	• Supported memory module quantity: 1, 2, 4, 6, or 8 • Supported memory module type: – DDR5-4800 (double data rate 5 at 4800 MT/s) ECC (error correction code) RDIMM (registered dual inline memory module) (16 GB, 32 GB, or 64 GB) – DDR5-4800 ECC 3DS (3D stacking) RDIMM (128 GB) – DDR5-5600 ECC RDIMM (16 GB, 32 GB, or 64 GB) – DDR5-6400 ECC RDIMM (16 GB, 32 GB, 64 GB, or 128 GB) • Install memory modules of the same type, the same capacity, and the same DRAM densities. • Install memory modules in the order shown in the following illustration. 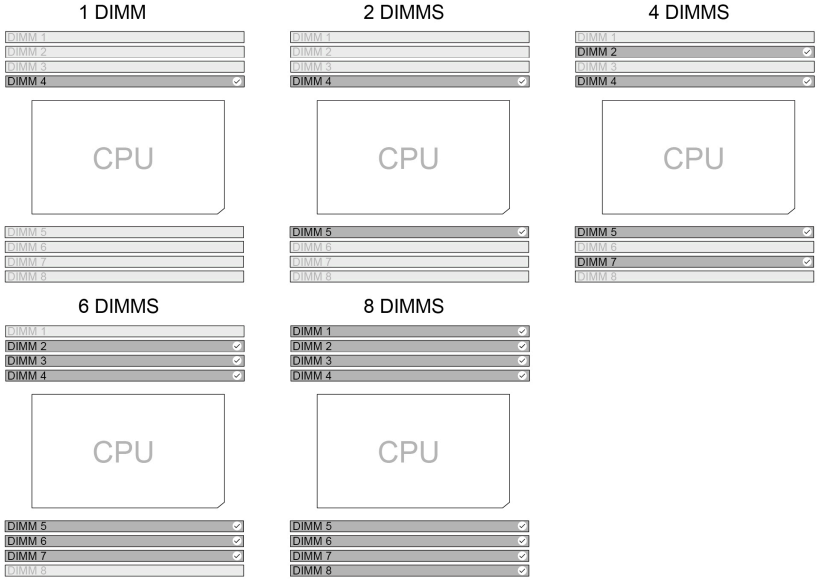

Location	Name	Description
5	Optional internal storage drive cage*	The optional internal storage drive cage can support a 3.5-inch HDD when: • 1a and 1b are both occupied with 3.5-inch HDDs, and • the computer is not installed with NVIDIA Quadro SYNC II, GeForce 40X0, GeForce 50X0, or RTX Pro 6000 BW graphics card.
6	Front-access storage bay	Depending on your computer model, one of the following devices can be installed in the front-access storage bay. • Blank bezel • Media card reader • NVMe storage tray (1) with an M.2 SSD storage box (2) inside: Support one M.2 SSD (Gen 4) 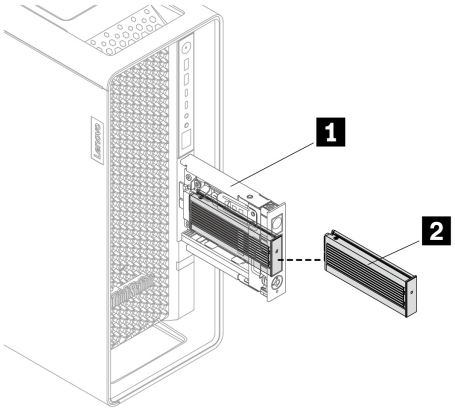 **Note:** The M.2 SSD storage box in the NVMe storage tray is hot-swappable when NVMe RAID mode is disabled and the operating system of your computer does not reside on the M.2 SSD inside.

Cooling system

The cooling system of your computer allows for unobstructed airflow. Illustrations and descriptions of the fans and heat sinks are as follows:

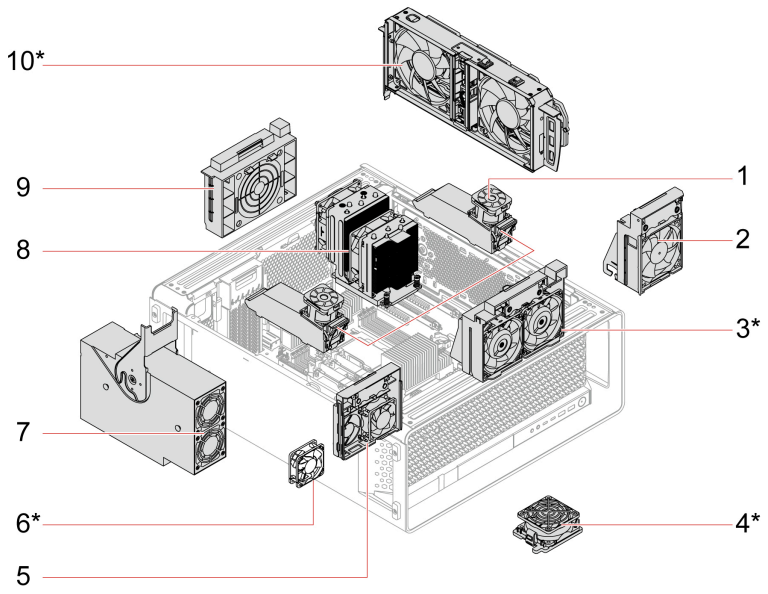

* for selected models

Item	Description	Item	Description
1	Memory fans and air ducts	2	Upper PCIe fan
3	Front fan*	4	Front-access storage fan*
5	Lower PCIe fan	6	Internal storage drive fan*
7	Power supply assembly fan	8	Microprocessor heat sink
9	Rear fan	10	Top-venting thermal fan*

Note: To replace the fans and heat sinks, see “Fans” on page 102.

Chapter 4. Service checkout and symptom-to-FRU index

This chapter provides information about general service checkout and symptom-to-FRU index.

Service checkout

Attention: The drives in the computer you are servicing might have been rearranged or the drive startup sequence changed. Be extremely careful during write operations such as copying, saving, or formatting. Data or programs can be overwritten if you select an incorrect drive.

General error messages appear if a problem or conflict is found by a program, the operating system, or both. For an explanation of these messages, refer to the information supplied with that software package.

Use the following procedure to help determine the cause of the problem:

1. Turn off the computer and all external devices.
2. Check all cables and power cords.
3. Set all display controls to the middle position.
4. Turn on all external devices.
5. Turn on the computer.
   - Look for displayed error codes.
   - Listen for beep codes.
   - Look for readable instructions or a main menu on the display.

   If you *did not* receive the correct response, proceed to step 6 on page 37.

   If you *do* receive the correct response, proceed to step 7 on page 37.
6. Look at the following conditions and follow the instructions:
   - If you hear beep codes during POST, go to “Beep symptoms” on page 39.
   - If the computer displays a POST error, go to “POST error codes” on page 40.
   - If the computer hangs and no error is displayed, continue at step 7 on page 37.
7. Run the Diagnostic programs. See Chapter 6 “Diagnostics” on page 52.
   - If you receive an error, replace the part that the diagnostic program calls out.
   - If the test stops and you cannot continue, replace the last device tested.

Problem determination tips

Due to the variety of hardware and software combinations that can be encountered, use the following information to assist you in problem determination. If possible, have this information available when requesting assistance from Service Support and Engineering functions.

- Machine type and model
- Processor or hard disk drive upgrades
- Failure symptom
  - Do diagnostics indicate a failure?
  - What, when, where, single, or multiple systems?
  - Is the failure repeatable?
  - Has this configuration ever worked?

© Copyright Lenovo 2026

  - If it has been working, what changes were made prior to its failing?
  - Is this the original reported failure?
- Diagnostics version
  - Type and version level
- Hardware configuration
  - Print (print screen) configuration currently in use
  - BIOS level
- Operating system software
  - Type and version level

Notes: To eliminate confusion, identical systems are considered identical only if they:

1. Are the exact machine type and models
2. Have the same BIOS level
3. Have the same adapters/attachments in the same locations
4. Have the same address jumpers/terminators/cabling
5. Have the same software versions and levels
6. Have the same Diagnostic Diskettes (version)
7. Have the same configuration options set in the system
8. Have the same setup for the operating system control files

Comparing the configuration and software set-up between “working and non-working” systems will often lead to problem resolution.

Symptom-to-FRU index

The Symptom-to-FRU index lists error symptoms and possible causes. The most likely cause is listed first. Always begin with “Service checkout” on page 37. This index can also be used to help you decide which FRUs to have available when servicing a computer. If you are unable to correct the problem using this index, go to “Undetermined problems” on page 43.

Notes:

- The Symptom-to-FRU index is not specific to any machine type and are applicable to all computers.
- If you have both an error message and an incorrect audio response, diagnose the error message first.
- If you cannot run the diagnostic tests or you get a diagnostic error code when running a test, but did receive a POST error message, diagnose the POST error message first.
- If you did not receive any error message, look for a description of your error symptoms in the first part of this index.

Hard disk drive boot error

A hard disk drive boot error can have the following causes.

Error	FRU/Action
The start-up drive is not in the boot sequence in configuration.	Check the configuration and ensure that the start-up drive is in the boot sequence.
No operating system installed on the boot drive.	Install an operating system on the boot drive.

Error	FRU/Action
The boot sector on the startup drive is corrupted.	The drive must be formatted. Do the following: 1. Attempt to back up the data on the failing hard disk drive. 2. Using the operating system programs, format the hard disk drive.
The drive is defective.	Replace the hard disk drive.

Power supply problems

If you suspect a power problem, use the following procedures.

Check/Verify	FRU/Action
Check the following for proper installation. • Power cord • On/Off switch connector • On/Off switch power supply connector • System board power supply connectors • CPU connection	Reseat connectors
Check the power cord for continuity.	Power cord
Check the power-on switch for continuity.	Power-on switch

Beep symptoms

Beep symptoms are tones or a series of tones separated by pauses (intervals without sound) during POST.

The following table describes the beep symptoms.

Beep symptom	FRU/Action
2 short beeps: common POST error	Common POST error code. See the detailed failure information in “POST error codes” on page 40.
3 short and 1 long beeps: DRAM memory error	Perform the following actions in order: 1. Make sure that the memory modules are properly seated in the memory slots. 2. Replace the memory modules. 3. Replace the system board.
4 long beeps: insufficient shadow RAM resources for option ROM (error code: 8998) or PCIe/PCI MMIO (memory mapped input/output) resources (error code: 8999)	See the detailed failure information in “POST error codes” on page 40.
2 long and 3 short beeps: graphics card error	Perform the following actions in order: 1. Make sure that the graphics cards are properly seated in the slots. 2. Replace the graphics cards. 3. Replace the system board.

POST error codes

Each time you turn on the system, it performs a series of tests that check the operation of the system and some options. This series of tests are called the *Power-On Self-Test*, or *POST*. POST checks the following operations:

- Some basic system-board operations
- Memory operation
- Video operation
- Whether the boot drive is working

If the POST detects a problem, an error message appears on the screen. A single problem might cause several error messages to appear. When you correct the cause of the first error message, the other error messages probably will not appear on the screen the next time.

Error code	POST error message	Description/Action
0135	CPU fan failure System fan failure Power fan failure Front fan failure Rear fan failure Auxiliary fan failure ODD fan failure	This error message is displayed when a fan fails and the system might be overheating. Press F10 to exit.
0162	Setup data integrity check failure	This error indicates the checksum of BIOS Setup data in NVRAM is bad. In BIOS Setup, the “Save Changes and Exit” operation is needed in order to clear this error.
0164	Memory configuration change has occurred	This error message is displayed when the memory size is changed. Press F10 to exit.
1762	Storage device configuration change has occurred	This error message is displayed when a hard disk drive change or an optical drive change has been made. Press F10 to exit.

Error code	POST error message	Description/Action
8998	Not enough shadow RAM resources for OPTION ROM, not all devices initialized. Suggest to remove some add-on cards, or change to UEFI mode in BIOS setup.	This error message is displayed when the shadow RAM resources for option ROM are insufficient. If the legacy option ROM is insufficient, remove some add-in cards. For the system that supports UEFI, set UEFI as the first priority.
8999	Not enough PCIe/PCI MMIO resources. Currently only one video card is enabled. Remove some PCIe cards.	This error message is displayed when the PCIe/PCI MMIO (memory mapped input/output) resources are insufficient. Remove some add-in cards.

Miscellaneous error conditions

Message/Symptom	FRU/Action
Changing display colors	**Display/Monitor**
Computer will *not* power-off. See “Hard disk drive boot error” on page 38.	1. Power Switch 2. System Board 3. Riser card, if installed.
Computer will *not* RPL from server	1. Ensure that the network is in startup sequence as the first device or the first device after diskette. 2. Ensure that the network adapter is enabled for RPL. 3. Network adapter (Advise network administrator of new MAC address)
Computer will *not* perform a Wake On LAN® (if applicable)	1. Check the power supply and signal cable connections to the network adapter. 2. Ensure that the operating system settings are set to enable Wake on LAN. 3. Ensure that the Wake On LAN feature is enabled in Setup/Configuration. 4. Ensure that the network administrator is using the correct MAC address. 5. Ensure no interrupt or I/O address conflicts. 6. Network adapter (advise network administrator of new MAC address)
Dead computer. See “Hard disk drive boot error” on page 38.	1. Power Supply 2. System Board
Diskette drive in-use light remains on or does not light when drive is active.	1. Diskette Drive 2. System Board 3. Diskette Drive Cable

Message/Symptom	FRU/Action
Blank screen except for flashing cursor.	1. System Board 2. Primary Hard Disk Drive 3. Hard Disk Drive Cable
Incorrect memory size during POST	1. Run the Memory tests. 2. Memory Module 3. System Board
"Insert a Diskette" icon appears with a known-good diagnostics diskette in the first 3.5-inch diskette drive.	1. System Board 2. Diskette Drive Cable 3. Network Adapter
Intensity or color varies from left to right of characters and color bars	1. Display 2. Video adapter (if present) 3. System Board
No power or fan not running	1. See “Hard disk drive boot error” on page 38.
Non-system disk or disk error-type message with a known-good diagnostic diskette.	1. Diskette Drive 2. System Board 3. Diskette Drive Cable
Other display symptoms not listed above (including blank or illegible display)	1. Display 2. System Board
Power-on indicator or hard disk drive in-use light not on, but computer works correctly	1. Power switch/LED assembly 2. System Board
Printer problems	1. Printer 2. System Board
Program loads from the hard disk with a known-good diagnostics diskette in the first 3.5-inch diskette drive	1. Run the Setup Utility program and check the Startup sequence. 2. Diskette Drive 3. Diskette Drive Cable 4. System Board 5. Power Supply
RPL computer cannot access programs from its own hard disk.	1. If the network administrator is using LCCM Hybrid RPL, check the startup sequence: a. **First device - network** b. **Second device - hard disk** 2. Hard disk drive
RPL computer does not RPL from server	1. Check the startup sequence. 2. Check the network adapter LED status.

Message/Symptom	FRU/Action
Serial or parallel connector device failure (system board connector)	1. External Device Self-Test OK? 2. External Device 3. Cable 4. System Board
Serial or parallel connector device failure (adapter connector)	1. External Device Self-Test OK? 2. External Device 3. Cable 4. Alternate Adapter 5. System Board
Some or all keys on the keyboard do not work	1. Keyboard 2. Keyboard Cable 3. System Board

Undetermined problems

This section provides instructions on how to find out the failing devices or adapters.

1. Turn off the computer.
2. Remove or disconnect the following components (if installed) one at a time.
   a. External devices (modem, printer, or mouse)
   b. Any adapters
   c. Memory modules
   d. Extended video memory
   e. External Cache
   f. External Cache RAM
   g. Hard disk drive
   h. Diskette drive
3. Turn on the computer to retest the system.
4. Repeat steps 1 through 3 until you find the failing device or adapter.

If all devices and adapters have been removed, and the problem continues, replace the system board. See Chapter 7 “Hardware replacement” on page 56.

BIOS recovery

Clear CMOS jumpers

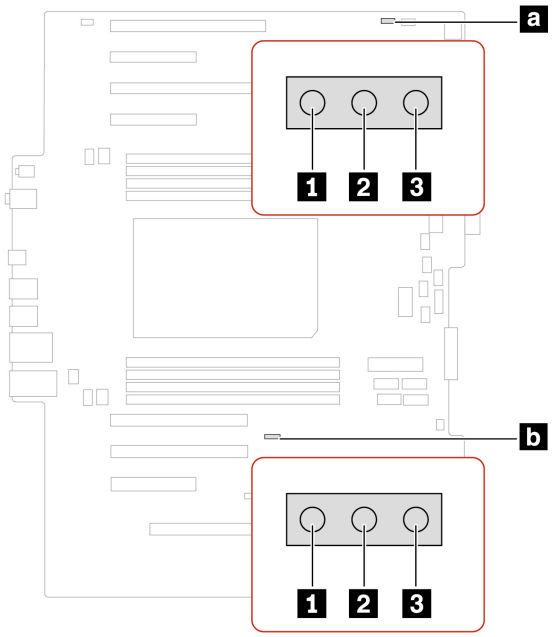

Item	Name	Jumper position	Description
a	Clear CMOS hardware jumper	• 1–2: Standard • 2–3: Clear CMOS	Used only to reset the BIOS time to default.
b	Clear CMOS & BBR software jumper	• 1–2: Standard • 2–3: Clear CMOS	Can be used to: • Clear CMOS (reset BIOS settings except BIOS time) • Recover from a BIOS update failure (rewrite all BIOS code and settings to factory defaults)

Clear CMOS

This product has both hardware and software jumpers on the system board with different functions. Ensure to use the correct jumper mentioned below.

Reset BIOS settings except BIOS time

Step 1. Remove all drive media. Turn off all connected devices and the computer.

Step 2. Unplug all power cords. Remove any parts blocking the **Clear CMOS & BBR software jumper**.

Step 3. Move the jumper from the standard to the Clear CMOS position.

Step 4. Reconnect power to the computer and monitor.

Step 5. Power on the system. When the computer beeps, the recovery process begins (which takes a few minutes).

Step 6. Press and hold the power button for around four seconds to power off.

Step 7. Unplug the power cords. Move the jumper back to the standard position.

Step 8. Reinstall all removed parts and reconnect power.

Step 9. Power on the system. When the logo screen is displayed, press F1 or Fn+F1.

Step 10. Check if the BIOS settings, except the BIOS time, are restored to an earlier point.

Reset BIOS time

Step 1. Remove all drive media. Turn off all connected devices and the computer.

Step 2. Unplug all power cords. Remove any parts blocking the **Clear CMOS hardware jumper**.

Step 3. Move the jumper from the standard to the Clear CMOS position.

Step 4. Move the jumper back to the standard position.

Step 5. Reinstall the removed parts and reconnect power.

Step 6. Power on the system. When the logo screen is displayed, press F1 or Fn+F1.

Step 7. Check if the BIOS time is restored to the default.

Recover from a BIOS update failure

Before you start, ensure to save the "IMAGEXXX.ROM" or "IMAGEXXX.cap" file in the BIOS update package to the root directory of your USB drive or disc.

Step 1. Remove all drive media. Turn off all connected devices.

Step 2. Insert the prepared USB drive or CD. Turn off the computer.

Step 3. Unplug all power cords. Remove any parts blocking the **Clear CMOS & BBR software jumper**.

Step 4. Move the jumper from the standard to the Clear CMOS position.

Step 5. Reconnect power to the computer and monitor.

Step 6. Power on the system. When the computer beeps, the recovery process begins. After a few minutes, the system will automatically shut down upon completion.

Step 7. Unplug the power cords. Move the jumper back to the standard position.

Step 8. Reinstall all removed parts and reconnect power.

Step 9. Power on the system. When the logo screen is displayed, press F1 or Fn+F1.

Step 10. Check if the BIOS is restored to the factory default.

Chapter 5. RAID

What is RAID

Redundant Array of Independent Disks (RAID) is a technology that provides increased storage functions and reliability through redundancy. It also can improve data storage reliability and fault tolerance compared with single-drive storage systems. Data loss resulting from a drive failure can be prevented by reconstructing missing data from the remaining drives.

When a group of independent physical storage drives is set up to use RAID technology, they are in a RAID array. This array distributes data across multiple storage drives, but the array appears to the host computer as one single storage unit. Creating and using RAID arrays provides high performance, such as the expedited I/O performance, because several drives can be accessed simultaneously.

Configure RAID with RAIDXpert2 Configuration Utility

If your computer comes with the RAIDXpert2 Configuration Utility , you can follow the sections below to configure RAID.

Select RAID mode

You can select the SATA RAID mode or NVMe RAID mode to configure RAID with RAIDXpert2 Configuration Utility.

1. Do one of the following to select the SATA RAID mode or NVMe RAID mode:
   - SATA RAID mode:
     a. Restart the computer. When the logo screen is displayed, press F1 or Fn+F1.
     b. Select **Devices → Storage Setup → Configure SATA as (AHCI/RAID)**.
     c. Select **RAID**.
   - NVMe RAID mode:
     a. Restart the computer. When the logo screen is displayed, press F1 or Fn+F1.
     b. Select **Devices → NVMe Setup → NVMe RAID Mode (Enabled/Disabled)**.
     c. Select **Enabled**.
2. Press F10 or Fn+F10 to save the changes and exit.
3. Restart the computer. When the logo screen is displayed, press F1 or Fn+F1.
4. Select **Devices → RAIDXpert2 Configuration Utility** to select drives and configure RAID.

Storage drive requirements for RAID levels

CAUTION:
Multiple operating systems are not supported on AMD-RAID Array. If the system is booted from an AMD-RAID bootable array, the first array in the Arrays section must be the bootable array. The system boots only from the first array in the Arrays section. Find the first array by viewing array details and checking the array number.

Your computer supports the following RAID levels:

- RAID 0: striped disk array
  – Provide the highest performance but no data redundancy. Data in the array is striped (distributed) across several disks.

© Copyright Lenovo 2026

  - Support 2-8 disks.
  - RAID 0 arrays are useful for holding information, such as the operating system paging file, where performance is extremely important but redundancy is not.
- RAID 1: mirrored disk array
  - Mirror data on a partition of one disk to another.
  - Support 2 disks.
  - RAID 1 arrays are useful when there are only two disks available and data integrity is more important than storage capacity.
- RAID 5: block-level striped disk array with distributed parity
  - Stripe data as well as parity, across all disks in the array.
  - Support 3-8 disks.
  - Offer exceptional read performance and redundancy.
- RAID 10: striped and mirrored disk array (a combination of RAID 0 and RAID 1)
  - Combine mirrors and stripe sets. RAID 10 allows multiple disk failures, up to 1 failure in each mirror that has been striped.
  - Support 4, 6, or 8 disks.
  - Offer better performance than a simple mirror because of the extra disks. Require twice the disk space of RAID 1 to offer redundancy.
- Volume (JBOD):
  - RAIDXpert2 Configuration Utility treats one or more disks or the unused space on a disk as a single array.
  - Support 1-8 disks.
  - Provide the ability to link-together storage from one or several disks, regardless of the size of the space on those disks. It is useful in scavenging space on disks unused by other disks in the array. It does not provide performance benefits or data redundancy. Disk failure will result in data loss.

Initialize disks

New disks and legacy disks must be initialized before they can be used to create an AMD-RAID array. Initialization writes AMD-RAID configuration information (metadata) to a disk.

CAUTION:

- **If a disk is part of an AMD-RAID array, the disk cannot be selected for initialization. To initialize the disk anyway, delete the AMD-RAID array. Data on the disk is deleted during initialization so ensure the correct disks are chosen to initialize.**
- **A legacy disk can contain valid data. When a legacy array is deleted, all data on the disk is lost.**

1. Enter the **RAIDXpert2 Configuration Utility** menu. Then, use the arrow keys to select **Physical Disk Management** and press Enter.
2. Use the arrow keys to select **Select Physical Disk Operations** and press Enter.
3. Use the arrow keys to select **Initialize Disk** and press Enter.
4. Select the disk(s) to initialize:
   a. Use the arrow keys to select a disk and press the Space Bar or Enter. Multiple disks can be selected using this method.
   b. Use the arrow keys to select **OK** and press Enter.
   c. Review the warning message. If you want to proceed, use the arrow keys to select **YES** and press Enter.

Note: The Initialization process takes about 10 to 15 seconds. During initialization, a complete re-scan of all channels is done automatically.

Create arrays

Arrays can be created after the disks are initialized:

1. Enter the **RAIDXpert2 Configuration Utility** menu. Then, use the arrow keys to select **Array Management** and press Enter.
2. Use the arrow keys to select **Create Array** and press Enter.
3. Use the arrow keys to select **Select RAID Level → RAID Level** and press Enter.

   Note: Some of the RAID levels might not be displayed because the number of installed storage drives varies.
4. Select the disks with which to create the array:
   a. Use the arrow keys to select **Physical Disks** and press Enter.
   b. Use the arrow keys to select desired disks and press the Space Bar or Enter.
   c. Use the arrow keys to select **Apply Changes** and press Enter.
5. Refer to the table below for the default cache tag size (CTS).

Array type	Default CTS
HDD Array	64k
SSD Array	64k
All NVMe Array	256k

6. Use the arrow keys to select **Read Cache Policy** and press Enter. Select the desired read cache policy and press Enter.
7. Use the arrow keys to select **Write Cache Policy** and press Enter. Select the desired write cache policy and press Enter.
8. Use the arrow keys to select **Create Array** and press Enter.

Delete arrays

CAUTION:

- **Deleting an array permanently destroys all data that is on the array. This action cannot be recalled and it is very unlikely the data can be recovered.**
- **Do not delete the first array listed in the Arrays section, if it is the AMD-RAID bootable array. Doing this deletes the operating system and AMD-RAID files.**

1. Enter the **RAIDXpert2 Configuration Utility** menu. Then, use the arrow keys to select **Array Management** and press Enter.
2. Use the arrow keys to select **Delete Arrays** and press Enter.
3. Select the array(s) to delete:
   a. Use the arrow keys to select the desired array or multiple arrays, then press the Space Bar or Enter to change the option to **Enabled** for deletion.
   b. If you want to select all of the arrays, use the arrow keys to select **Check all** and press Enter.
   c. Use the arrow keys to select **Delete Array** and press the Space Bar or Enter.
   d. Review the warning message. If you want to proceed, press the Space Bar or Enter.
   e. Use the arrow keys to select **Yes** to delete arrays.

View array details

This option displays the details of an array. Nothing can be changed using this menu option. It is for informational purposes only.

1. Enter the **RAIDXpert2 Configuration Utility** menu. Then, use the arrow keys to select **Array Management** and press Enter.
2. Use the arrow keys to select **Select Manage Array Properties** and press Enter.
3. Use the arrow keys to select **Select Array** and press Enter. Select the desired array and press **Enter**.
4. Use the arrow keys to select **View Associated Physical Disks** and press Enter.
5. Press the Space Bar to select one of the members of the Array.
6. Use the arrow keys to select **View Physical Disk Properties** and press Enter.
7. Information about the array is displayed below **Select Array header**:
   - Array number
   - RAID level
   - State
   - Size
   - Cache Tag Size
   - Cache settings
   - Associated physical disks
8. To view another array, press ESC twice and perform steps 2 through 7 again.
9. Press ESC to exit the main menu.

Configure RAID with MegaRAID Configuration Utility

To configure RAID with MegaRAID Configuration Utility, ensure that:

- A MegaRAID adapter is installed on your computer.
- The storage drives used for RAID configuration are connected to the installed MegaRAID adapter instead of the system board.

Storage drive requirements for RAID levels

Your computer supports the following RAID levels:

- RAID 0: striped disk array
  - Consists of at least two NVMe storage drives
  - Supported strip size: 64 KB, 128 KB, 256 KB, 512 KB, or 1 MB
  - Better performance without fault tolerance

  CAUTION:
  RAID 0 does not support any data redundancy. Use RAID 0 with caution. If a drive in the RAID 0 array fails, the data will be lost and there is no way to get it recovered.
- RAID 1: mirrored disk array
  - Consists of two or four NVMe storage drives
  - Improved read performance and 100% redundancy
- RAID 10: striped and mirrored disk array (a combination of RAID 0 and RAID 1)
  - Consists of four NVMe storage drives

  - Data being striped across storage drive groups
  - Provides both high data transfer rates and complete data redundancy
- RAID 5: block-level striped disk array with distributed parity
  - Consists of at least three NVMe storage drives
  - Supported strip size: 64 KB, 128 KB, 256 KB, 512 KB, or 1 MB
  - Better performance and fault tolerance
  - Available only on selected models of MegaRAID adapters
- RAID 6: block-level striped disk array with dual distributed parity
  - Consists of at least four NVMe storage drives
  - Supported strip size: 64 KB, 128 KB, 256 KB, 512 KB, or 1 MB
  - Better performance and fault tolerance that can stand up to loss of two storage drives
  - Available only on selected models of MegaRAID adapters

Create a RAID volume

Attention: All the existing data stored on the selected drives will be erased while the RAID volume is being created.

To create a RAID volume:

1. Restart the computer. When the logo screen is displayed, press F1 or Fn+F1.
2. Select **Devices ➞ MegaRAID Configuration Utility** and press Enter.
3. Select **Main Menu** and press Enter.
4. Select **Configuration Management** and press Enter.
5. Select **Create Virtual Drive** and press Enter.
6. Select and configure the options one by one.
   a. **Select RAID Level**: You can set the RAID level to one of the following:
      - **RAID0**
      - **RAID1**
      - **RAID5**
      - **RAID6**
      - **RAID10**

      Note: Some of the RAID levels might not be displayed because the number of installed storage drives and the model of the MegaRAID adapter vary.
   b. **Select Drives From**: Select **Unconfigured capacity** or **Free capacity** depending on your needs and press Enter.
   c. **Select Drives**: Select a storage drive and press Enter. After selecting all storage drives for creating the RAID volume, select **Apply Changes** and press Enter. When promoted, select **Confirm** and press Enter. Then, select **Yes** and press Enter to save the storage drive selection. Finally, select **OK** and press Enter.
   d. **Virtual Drive Name**: You can type a preferred name for the volume name.
   e. **Strip Size** (if applicable): Select a strip size and press Enter.
7. Select **Save Configuration** and press Enter. When promoted, select **Confirm** and press Enter. Then, select **Yes** and press Enter to confirm the creation of the RAID volume.
8. Press F10 or Fn+F10 to save the changes and exit.

View the information about a RAID volume

To view the information about a RAID volume:

1. Restart the computer. When the logo screen is displayed, press F1 or Fn+F1.
2. Select **Devices → MegaRAID Configuration Utility** and press Enter.
3. Select **Main Menu** and press Enter.
4. Select **Virtual Drive Management** and press Enter.
5. Select a RAID volume and press Enter to view the detailed information.
6. Press F10 or Fn+F10 to save the changes and exit.

Virtual drive state

Virtual drive can be in one of the following states:

State	Display in the output of StorCLI commands	Virtual drive status
Optimal	**optl**	All members of the virtual drive are online.
Partially Degraded	**Pdgd**	The virtual drive is capable of sustaining more than one member drive's failure. Currently, only a RAID 6 or RAID 60 virtual drive can be partially degraded.
Degraded	**dgrd**	One or more member drives have failed. The virtual drive can no longer sustain a subsequent drive failure.
Offline	**OfLn**	One or more member drives have failed. Virtual drive data has lost.

CAUTION:
Continuously monitor the RAID volume status to save drives from undesired data loss. If there is any drive failure, remove the failing drive and install a new one.

Delete a RAID volume

Attention: All the existing data stored on the selected drives will be erased after you delete RAID volumes.

To delete a RAID volume:

1. Restart the computer. When the logo screen is displayed, press F1 or Fn+F1.
2. Select **Devices → MegaRAID Configuration Utility**.
3. Select **Main Menu** and press Enter.
4. Select **Virtual Drive Management** and press Enter.
5. Select the RAID volume that is not needed and press Enter.
6. Under **Operation**, select **Delete Virtual Drive** and press Enter.
7. Select **Go** and press Enter. When prompted, select **Confirm** and press Enter. Then, select **Yes** and press Enter to delete the RAID volume.
8. Press F10 or Fn+F10 to save the changes and exit.

Chapter 6. Diagnostics

Use diagnostic solutions to test hardware components and report operating-system-controlled settings that interfere with the correct operation of your computer.

Basic procedure for resolving computer problems

Prerequisite

Before you start, read Chapter 1 “Important safety information” on page 1 and print the following instructions.

1. Check that:
   a. The cables for all connected devices are connected correctly and securely.
   b. All components have been reassembled correctly.
   c. All connected devices that require ac power are connected to properly grounded and working electrical outlets.
   d. All connected devices are enabled in UEFI BIOS.
2. Use an antivirus program to see if the computer has been infected by a virus. If the program detects a virus, remove the virus.
3. Go to “Self-help resources” on page 54 and follow the instructions for the type of problem you are experiencing.
4. Run the diagnostic program.
5. Recover your operating system. See “Self-help resources” on page 54.
6. If the problem persists, contact Lenovo.

UEFI diagnostic program

A UEFI diagnostic program is preinstalled on the computer. It enables you to test memory modules and internal storage devices, view system information, and check and recover bad sectors on internal storage devices.

To run the UEFI diagnostic program, do the following:

1. Turn on the computer. If the computer cannot be turned on, go to “Basic procedure for resolving computer problems” on page 52. If an error code is displayed, go to “Symptom-to-FRU index” on page 38 for error code descriptions and troubleshooting hints.
2. Repeatedly press and release the F10 key when turning on the computer. The main screen of the UEFI diagnostic program is displayed.
3. Follow the instructions on the screen to use the diagnostic program.

The options on the main screen are as follows:

© Copyright Lenovo 2026

Table 1. Options on the main screen of the UEFI diagnostic program

DIAGNOSTICS	TOOLS
• **CPU [U]** • **DISPLAY [D]** • **MEMORY [E]** • **MOTHERBOARD [H]** • **PCI EXPRESS [P]** • **STORAGE [S]** • **AUDIO [Z]** • **OPTICAL [O]** • **RUN ALL [R]**	• **SYSTEM INFORMATION [F1]** • **BAD BLOCK RECOVERY [F3]** • **SMART INFORMATION [F5]**

Note: The options on the main screen might vary, depending on the hardware configuration and the UEFI diagnostic program version preinstalled on the computer.

Use ThinkStation diagnostic tool

When an error message pops up in the Windows notification area, a four-digit error code is displayed on the diagnostic panel (for selected models) on the front panel, or the diagnostic indicator on the front panel turns on, do one of the following:

- If ThinkStation Diagnostics can be launched properly:
  1. Click the error message or the ThinkStation Diagnostics icon to launch the program.
  2. All events are logged locally in the program. Locate the related event and view the event log to find possible solutions.
  3. Record the four-digit error code displayed on the diagnostic panel (for selected models) or in ThinkStation Diagnostics, and then decode the error at https://www.thinkworkstationsoftware.com/?view=codes.

  Note: You can download ThinkStation Diagnostics at https://pcsupport.lenovo.com/lenovodiagnosticsolutions/downloads.
- If your computer does not function:
  1. Use your smartphone to scan the QR code displayed on the diagnostic panel to open https://www.thinkworkstationsoftware.com/?view=codes.
  2. Decode the error according to the four-digit error code displayed on the diagnostic panel.

For more information, go to https://www.thinkworkstationsoftware.com/?view=diags.

Use the Vantage app

The Vantage app is preinstalled on your computer. To diagnose problems with the Vantage app:

1. Type `Vantage` in the Windows search box and press Enter.
2. Follow the on-screen instructions and run a hardware scan.

If you are unable to isolate and resolve the problem after running the Vantage app, save and print the log files created by the program. You might need the log files when you speak to a Lenovo technical support representative.

Self-help resources

Use the following self-help resources to learn more about the computer and troubleshoot problems.

Resources	How to access?
Troubleshooting and frequently asked questions	• https://www.lenovo.com/tips • https://forums.lenovo.com
Accessibility information	https://www.lenovo.com/accessibility
Reset or restore Windows	• Use Lenovo recovery options. 1. Go to https://support.lenovo.com/HowToCreateLenovoRecovery. 2. Follow the on-screen instructions. • Use Windows recovery options. 1. Go to https://pcsupport.lenovo.com. 2. Detect your computer or manually select your computer model. 3. Navigate to the troubleshooting menu to diagnose the operating system for recovery instructions.
Use the Vantage app to: • Configure device settings. • Download and install UEFI BIOS, drivers and firmware updates. • Secure you computer from outside threats. • Diagnose hardware problems. • Check the computer warranty status. • Access *User Guide* and helpful articles. **Note:** The available features vary depending on the computer model.	Type `Vantage` in the Windows search box.
Product documentation: • *Safety and Warranty Guide* • *Generic Safety and Compliance Notices* • *Setup Guide* • This *User Guide* • *Regulatory Notice*	Go to https://support.lenovo.com/documentation and search by product.

Resources	How to access?
Lenovo Support Web site with the latest support information of the following: • Drivers and software • Diagnostic solutions • Product and service warranty • Product and parts details • Knowledge base and frequently asked questions	https://pcsupport.lenovo.com
Windows help information	• Type `Get Help` or `Tips` in the Windows search box. • Use Windows Search. • Microsoft support Web site: https://support.microsoft.com

Chapter 7. Hardware replacement

This chapter provides instructions on how to remove and install hardware for your computer.

Interactive video guide

Now you have another option to learn about ThinkStation P8 hardware replacement. Except for information in Chapter 7 of this Hardware Maintenance Manual, it will provide an interactive hardware replacement journey by a flowchart and replacement videos. Click the following link to visit it. https://download.lenovo.com/manual/thinkstation_p8_new_hmm/html/en/index.html

Before hardware replacement

Before replacing hardware of the computer, read this section first. You will get to know tools needed, FRU and CRU list, system board connectors, and prerequisites for hardware replacement.

Service tool kit

Ensure that the following common service tool kit is prepared before you service the computer.

No.	Tool name	Specification	Product scope	Tool type
1	Screwdriver: Phillips Head 0	PH0	All	Common tool
2	Screwdriver: Phillips Head 00	PH00	All	Common tool
3	Screwdriver: Phillips Head 1	PH1	All	Common tool
4	Screwdriver: Phillips Head 01	PH1, shank > 6"	Workstation/DT	Common tool
5	Screwdriver: Phillips Head 02	PH2, shank > 6"	Workstation/DT/SC	Common tool
6	Screwdriver: Torx Head T5	T5	IdeaPad	Common tool
7	Screwdriver: Torx Head T15	T15, for chassis outside	Workstation	Common tool
8	Screwdriver: Torx Head T20	T20, shank > 6", for heatsink and CPU	Workstation	Common tool
9	Screwdriver: Torx Head T30	T30, shank > 6", for heatsink and CPU	Workstation	Common tool

© Copyright Lenovo 2026

No.	Tool name	Specification	Product scope	Tool type
10	Pry tools 1	N/A	All	Common tool
11	Tweezers (conductive)	Point tip tweezers	All	Common tool
12	Tweezers (isolated)	N/A	All	Common tool
13	Suction cup	N/A	All	Common tool
14	Hexagonal socket (for VGA)	H5 mm or 4.8 mm	ThinkCentre/Tiny	Common tool
15	Hexagonal socket (for Tiny antenna)	H8 mm	ThinkCentre/Tiny	Common tool
16	Adjustable torque screwdriver	0.2 Nm to 4.0 Nm, Threadripper CPU, CAMM, etc	All	Common tool
17	ESD mat	ESD mat	All	Common tool
18	USB flash drives	For Golden Key, Chrome Reloads, AutoPilot, etc	All	Common tool
19	USB-C to USB-A converter / HDMI to HDMI cable (optional)	For USB-C only systems / For systems with HDMI connectors	All	Common tool
20	SIM card pin	For systems with 4G/5G WWAN SIM card	All	Common tool
21	Hexagonal socket	H10 mm	ThinkEdge	Common tool
22	Screwdriver: Slotted Head	SL3.0 mm	ThinkEdge	Common tool
23	SSD/WWAN/IC thermal pad	Available in different thicknesses, most commonly 0.5 mm	All	Consumable
24	Silicone grease for CPU/GPU or heatsink repairing	Recommended thermal conductivity > 6W/mK, such as TC5888/TC5550/PTM7950/ PTM7958. Follow HMM-specific guidance.	All	Consumable
25	Thermal gel / Thermal putty / Thermal gum	XPG-0001/TC7006	All	Consumable

No.	Tool name	Specification	Product scope	Tool type
26	Polyamide tape	N/A	All	Consumable
27	Mylar tape	N/A	All	Consumable
28	Eraser	N/A	All	Consumable
29	Electrical tape	N/A	All	Consumable
30	Double sided tape	N/A	All	Consumable
31	Conductive tape	N/A	All	Consumable
32	Cleaning pads/wipes	N/A	All	Consumable
33	Heat gun	N/A	All	Special Tool (Depot only)
34	Brown brush	25 mm to 35 mm wide	All	Special tool
35	Contact cleaner spray	WD-40 contact cleaner for battery connector	ThinkPad X1 Carbon	Special tool
36	Hexagonal socket	17 mm	Yoga AIO 7 27ACH6 / Yoga AIO 7 27ARH6	Special tool

Note: The silicone grease can be applied to the surfaces of the CPU and heat sink to eliminate air gaps. For parts with silicone grease applied, it is suggested that you apply new grease during the installation.

Major FRUs and CRUs

Your computer contains the following types of CRUs and FRUs:

- **Self-service CRUs:** Refer to parts that can be replaced easily by customer themselves or by trained service technicians at an additional cost.
- **Optional-service CRUs:** Refer to parts that can be replaced by customers with a greater skill level. Trained service technicians can also provide service to replace the parts under the type of warranty designated for the customer's machine.
- **FRUs:** Refer to parts that are more complicated to replace and it is recommended that these should be replaced by trained service technicians. If customers elect to replace the FRUs by themselves, we recommend that you ensure the correct instructions provided by Lenovo are carefully followed.

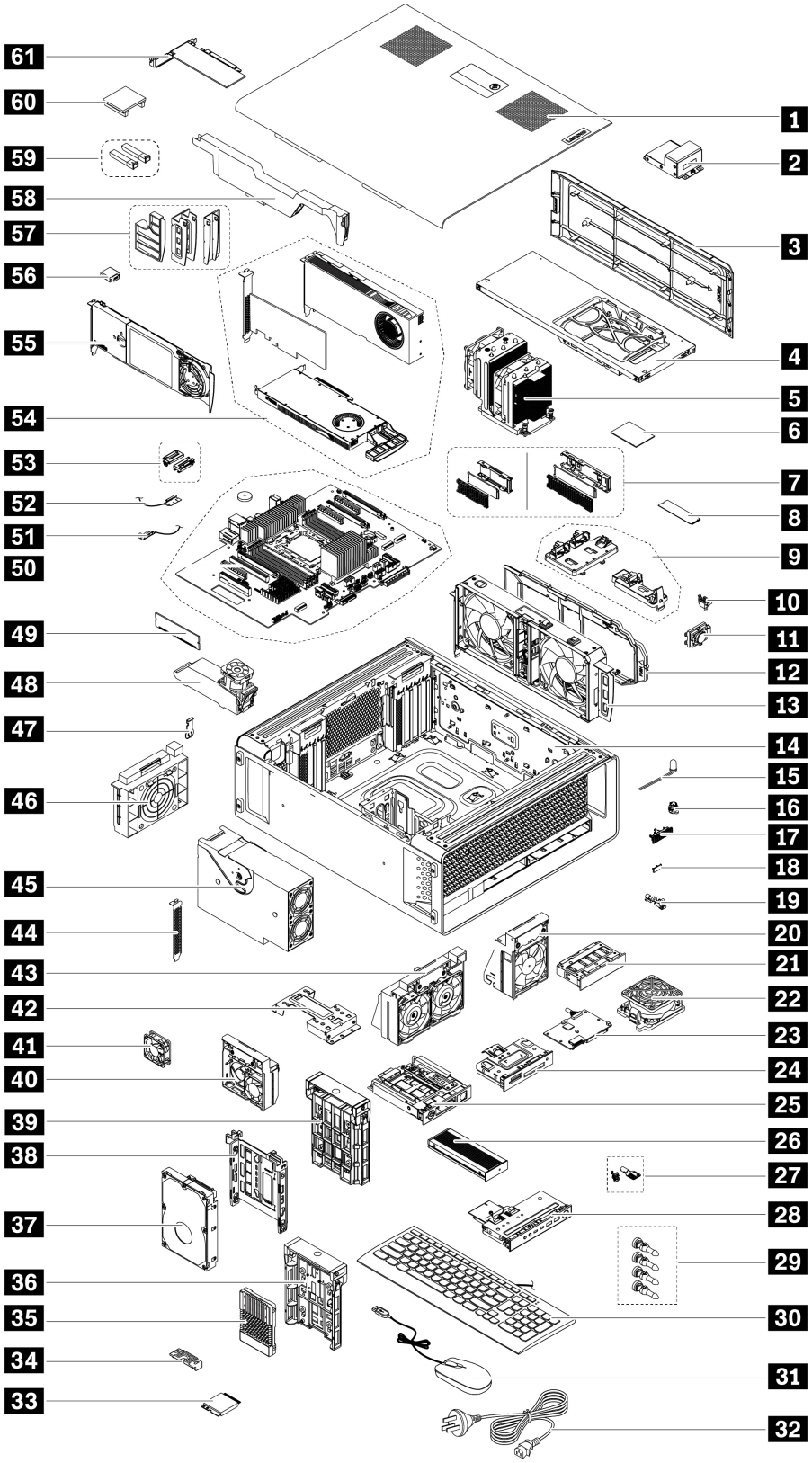
61
60
59
58
57
56
55
54
53
52
51
50
49
48
47
46
45
44
43
42
41
40
39
38
37
36
35
34
33
1
2
3
4
5
6
7
8
9
10
11
12
13
14
15
16
17
18
19
20
21
22
23
24
25
26
27
28
29
30
31
32

Number	Description	Self-service CRU	Optional-service CRU
1	Side cover	Yes	No
2	NVLINK retainer*	Yes	No
3	Top cover	Yes	No
4	Optional internal storage drive cage*	Yes	No
5	CPU heat sink	No	No
6	CPU	No	No
7	M.2 SSD heat sink kit	Yes	No
8	M.2 SSD	Yes	No
9	M.2 SSD holder	Yes	No
10	Intrusion switch	No	No
11	Internal speaker	No	Yes
12	Top-venting air duct*	Yes	No
13	Top-venting thermal fan*	Yes	No
14	Chassis	No	No
15	ThinkStation LED	Yes	No
16	ThinkStation LED holder	Yes	No
17	ThinkStation Logo badge	Yes	No
18	Computer ID badge	Yes	No
19	Thermal sensor	No	No
20	Upper PCIe fan	Yes	No
21	Blank bezel*	Yes	No
22	Front-access storage fan*	Yes	No
23	PCBA of media card reader*	No	Yes
24	Media card reader*	No	Yes
25	NVMe storage tray*	Yes	No
26	M.2 SSD storage box*	Yes	No
27	Locks and keys for side cover and M.2 SSD storage box	Yes	No
28	Front panel I/O assembly	No	Yes
29	Fan grommets*	Yes	No
30	Keyboard*	Yes	No
31	Mouse*	Yes	No
32	Power cord*	Yes	No
33	Wi-Fi card*	No	No
34	Wi-Fi card cover*	No	No
35	U.2 or U.3 SSD*	Yes	No

Number	Description	Self-service CRU	Optional-service CRU
36	U.2 or U.3 SSD bracket*	Yes	No
37	HDD*	Yes	No
38	HDD bracket*	Yes	No
39	M.2 SSD bracket*	Yes	No
40	Lower PCIe fan	Yes	No
41	Internal storage drive fan*	Yes	No
42	NVMe cable bracket*	No	No
43	Front fan*	Yes	No
44	PCIe bracket*	Yes	No
45	Power supply assembly	Yes	No
46	Rear fan	Yes	No
47	Rear power button	No	No
48	Memory fan and air duct	Yes	No
49	Memory module	Yes	No
50	System board and coin-cell battery assembly	No	No
51	Front Wi-Fi antenna*	No	No
52	Rear Wi-Fi antenna*	No	No
53	Wi-Fi antenna cover*	Yes	No
54	PCIe card*	No	Yes
55	M.2/U.2/U.3 SSD PCIe adapter*	No	Yes
56	Serial connector cable*	No	No
57	Customized PCIe card extender*	Yes	No
58	Super capacitor module*	Yes	No
59	Fiber modules for NVIDIA ConnectX-6 Ethernet Adapter*	No	Yes
60	NVLINK bridge*	No	Yes
61	BMC card*	No	No

* for selected models

For detailed FRU and CRU information, such as the FRU part numbers and supported computer models, go to:
http://www.lenovo.com/serviceparts-lookup

System board illustration

Note: The system board might look slightly different from the illustration.

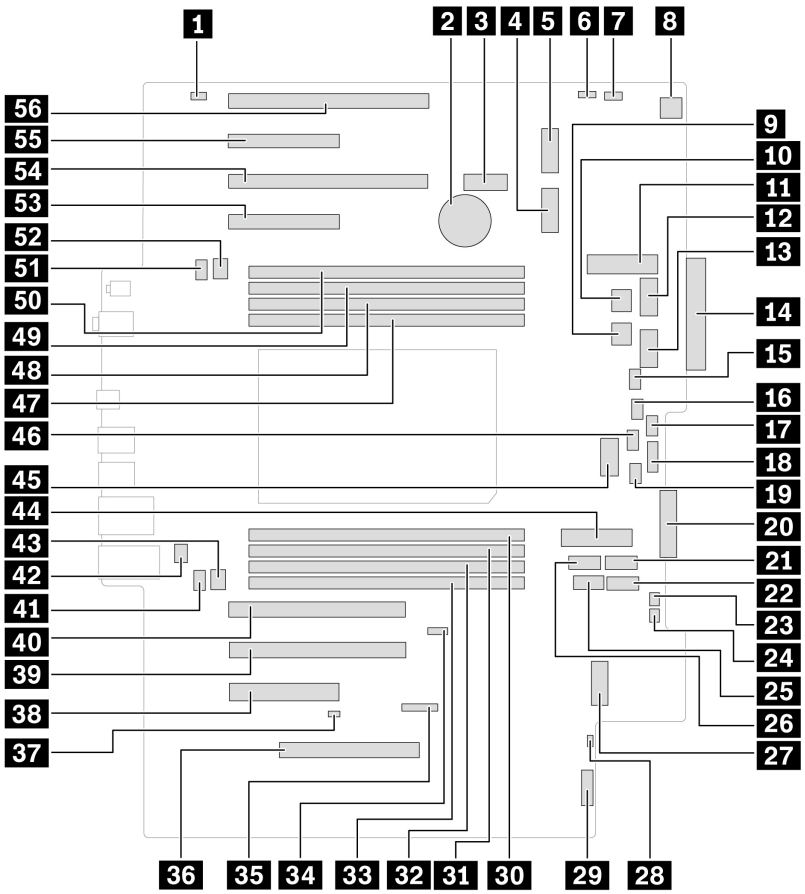

Item	Description	Item	Description
1	Internal speaker connector	2	Coin-cell battery
3	Wi-Fi socket	4	M.2 SSD slot 2
5	M.2 SSD slot 1	6	Clear CMOS hardware jumper
7	Cover presence switch (intrusion switch) connector	8	Upper PCIe (slot1–4) fan connector
9	Internal storage drive cage power connector 1	10	Internal storage drive cage power connector 2
11	Internal storage drive cage slot 1	12	Graphics card power connector 1
13	Graphics card power connector 3	14	Front-panel I/O connector
15	Front fan connector	16	Front-access storage fan connector
17	Internal storage drive fan connector	18	Internal USB-A 2.0 connector
19	CPU fan connector 1	20	Front-access storage bay connector
21	SATA 3 connector	22	SATA 2 connector
23	Flex I2C connector	24	ThinkStation LED connector
25	Internal USB-A 3.2 Gen 2 connector	26	SATA 1 connector
27	M.2 SSD slot 3	28	RAID LED cable connector
29	TCM connector	30	Memory slot 5 (DIMM 5)

Item	Description	Item	Description
31	Memory slot 6 (DIMM 6)	32	Memory slot 7 (DIMM 7)
33	Memory slot 8 (DIMM 8)	34	Clear CMOS and BBR (Boot Block Recovery) software jumper
35	BMC card connector	36	Power supply connector
37	USB4 power connector	38	PCIe slot 7 - Gen 4 x 8
39	PCIe slot 6 - Gen 5 x 16	40	PCIe slot 5 - Gen 5 x 16
41	CPU fan connector 2	42	Serial port (COM) connector
43	Memory fan 2 connector	44	Internal storage drive cage slot 2
45	Graphics card power connector 2	46	Lower PCIe (slot 5–7) fan connector
47	Memory slot 4 (DIMM 4)	48	Memory slot 3 (DIMM 3)
49	Memory slot 2 (DIMM 2)	50	Memory slot 1 (DIMM 1)
51	Memory fan 1 connector	52	Rear fan connector
53	PCIe slot 4 - Gen 5 x 8	54	PCIe slot 3 - Gen 5 x 16
55	PCIe slot 2 - Gen 5 x 8	56	PCIe slot 1 - Gen 5 x 16

Prerequisites for hardware replacement

General prerequisites

Read *Generic Safety and Compliance Notices*.

Prerequisites for opening computer cover

- 

  During operation, some components become hot enough to burn the skin. Before you open the computer cover, remove any media from the drives, turn off the computer and connected devices, disconnect power, remove all cables and locking devices, and wait approximately 10 minutes until the computer is cool.
- Before reaching parts with cables, record the cable routing for future reference and then disconnect its cable from the system board.

Prerequisites for storage drive replacement

Attention: The internal storage drive is sensitive. Inappropriate handling might cause damage and loss of data. When handling the internal storage drive, observe the following guidelines:

- Replace the internal storage drive only for repair. The internal storage drive is not designed for frequent changes or replacement.
- Before replacing the internal storage drive, make backup copy of all the data that you want to keep.
- Do not touch the contact edge of the internal storage drive. Otherwise, the internal storage drive might get damaged.
- Do not apply pressure to the internal storage drive.

- Do not make the internal storage drive subject to physical shocks or vibration. Put the internal storage drive on soft material, such as a cloth, to absorb physical shocks.

Prerequisites for hot-swappable M.2 SSD storage box replacement

For some computer models, an NVMe storage tray might be installed in the front-access storage bay. The M.2 SSD storage box(2) in the NVMe storage tray(1) can be hot-swappable, which means you can replace the M.2 SSD inside without even turning off your computer.

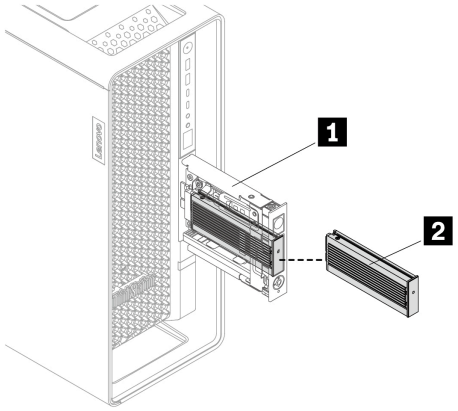

Attention: To avoid damage and loss of data, observe the following guidelines before replacing the hot-swappable M.2 SSD storage box:

- Ensure that NVMe RAID mode is disabled.
- Ensure that the operating system of your computer does not reside on the M.2 SSD inside the hot-swappable M.2 SSD storage box.
- Lock the M.2 SSD storage box to prevent unexpected removal. The keys are attached to the rear of the computer. For security, store the keys in a secure place.

Handling static-sensitive devices

Do not open the static-protective package containing the new part until the defective part has been removed and you are ready to install the new part. Static electricity, although harmless to you, can seriously damage computer components and options.

When you handle options and other computer components, take these precautions to avoid static-electricity damage:

- Limit your movement. Movement can cause static electricity to build up around you.
- Always handle options and other computer components carefully. Handle PCI/PCIe cards, memory modules, system boards, and CPUs by the edges. Never touch any exposed circuitry.
- Prevent others from touching the options and other computer components.
- Touch the static-protective package containing the part to a metal expansion-slot cover or other unpainted metal surface on the computer for at least two seconds. This reduces static electricity from the package and your body before you install or replace a new part.
- When possible, remove the new part from the static-protective package, and install it directly in the computer without setting the part down. When this is not possible, place the static-protective package on a smooth, level surface and place the part on the package.
- Do not place the part on the computer cover or other metal surface.

ThinkStation logo badge

Before you start, ensure that you have read “Prerequisites for hardware replacement” on page 63.

Removal steps

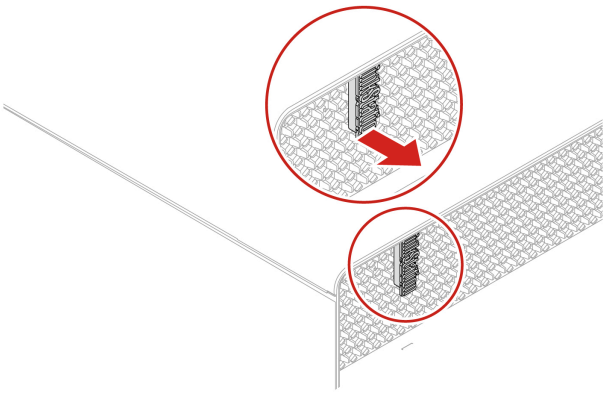

Computer ID badge

Before you start, ensure that you have read “Prerequisites for hardware replacement” on page 63.

Removal steps

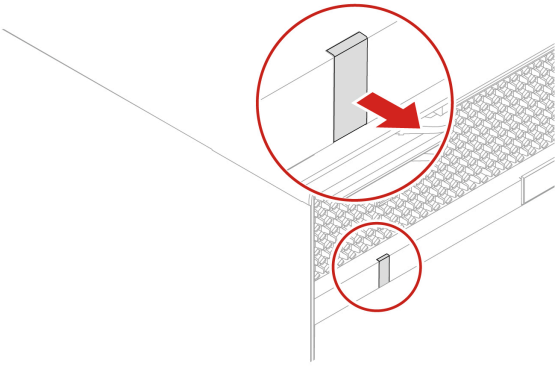

Top cover

Before you start, ensure that you have read “Prerequisites for hardware replacement” on page 63.

Removal steps

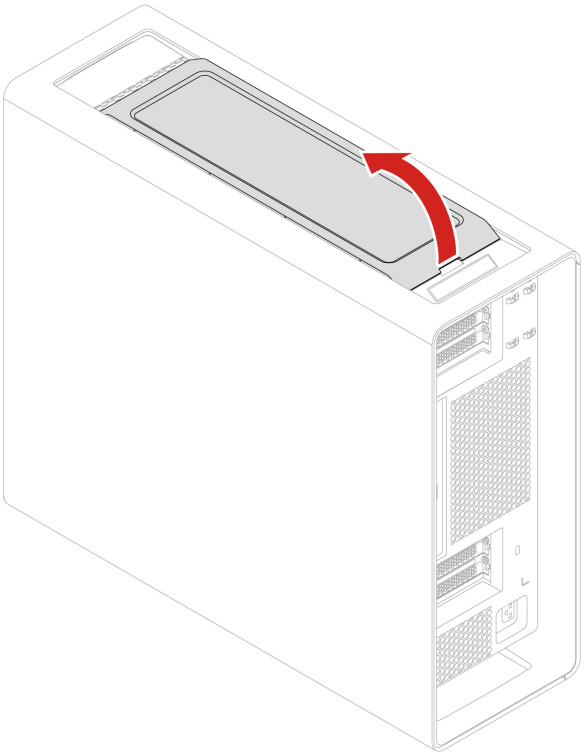

Installation steps

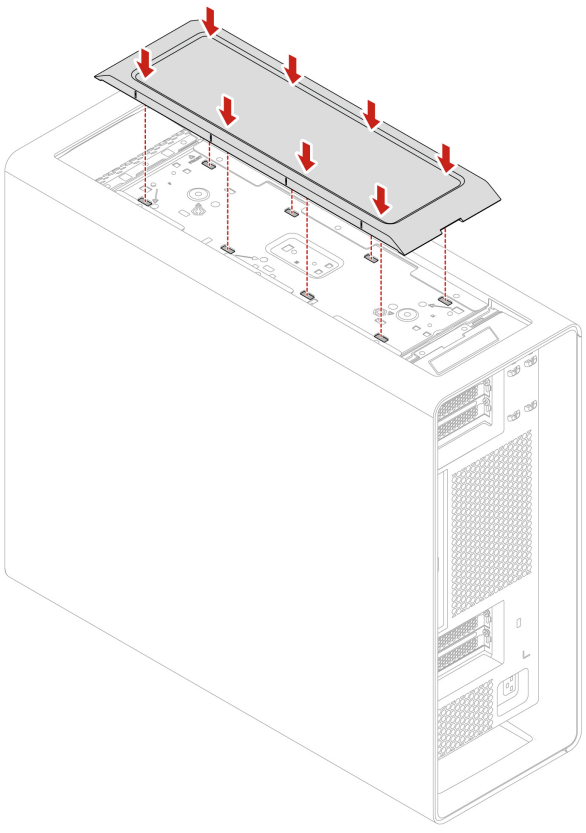

Wi-Fi antenna cover

Before you start, ensure that you have read “Prerequisites for hardware replacement” on page 63.

Removal steps

1. Remove the “Top cover” on page 65.
2. Remove the Wi-Fi antenna cover.

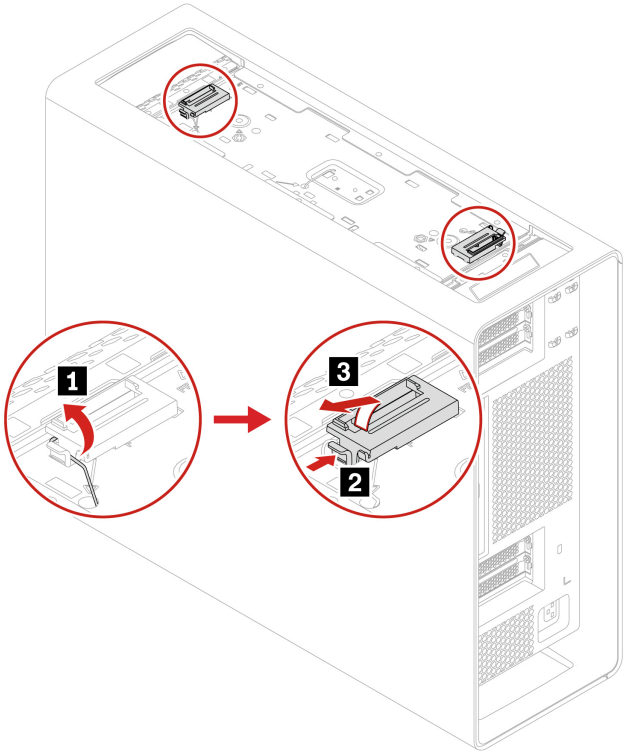

Keys for side cover and M.2 SSD storage box

Before you start, ensure that you have read “Prerequisites for hardware replacement” on page 63.

Removal steps

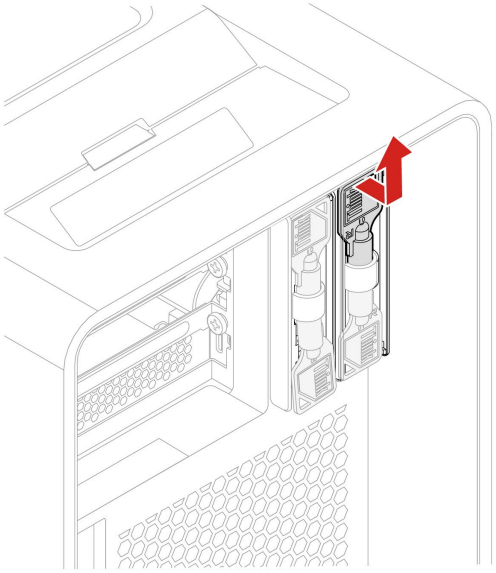

Side cover

Before you start, ensure that you have read “Prerequisites for hardware replacement” on page 63.

Removal steps

1. Lay the computer on its side for easier access to the side cover.
2. Remove the side cover.
   - Type-1

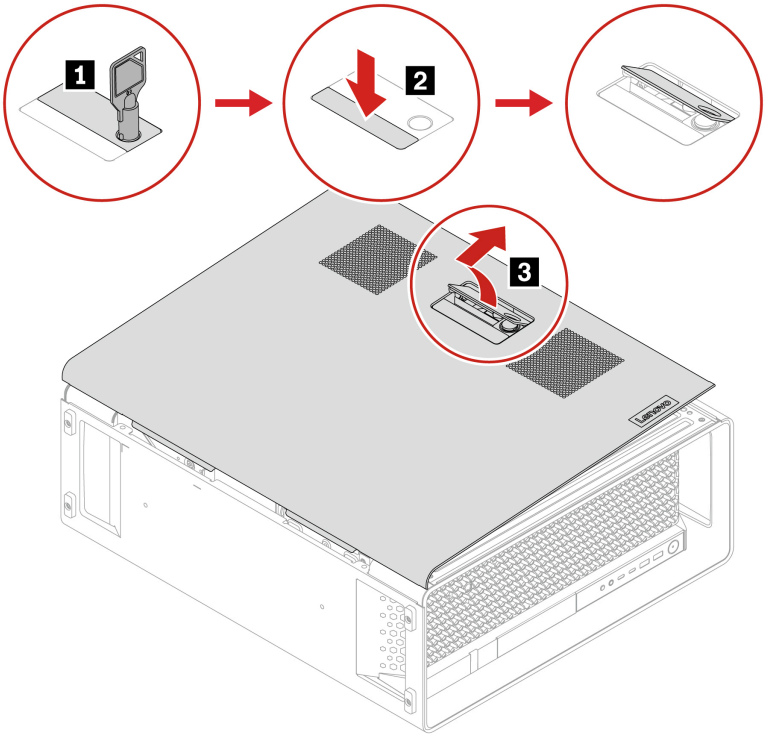

- Type-2

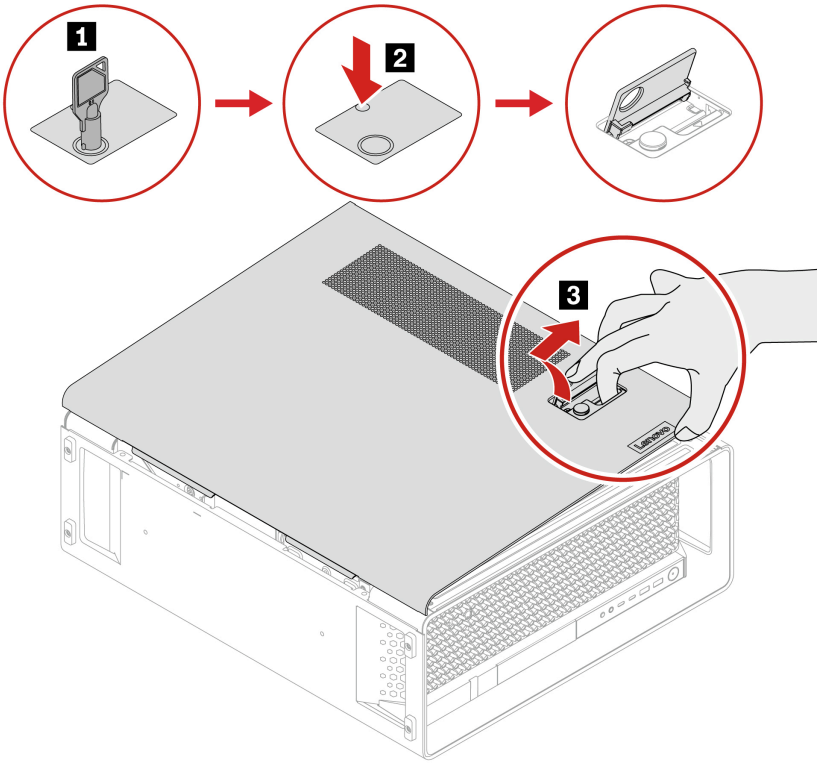

Notes:

- The lock for side cover and the unlocking step are for selected models.

- The key is attached at the rear of the computer. Keys carved with xx, such as 00, 01, 02, or 03 can unlock the locks carved with the same numbers.

Installation steps

- Type-1

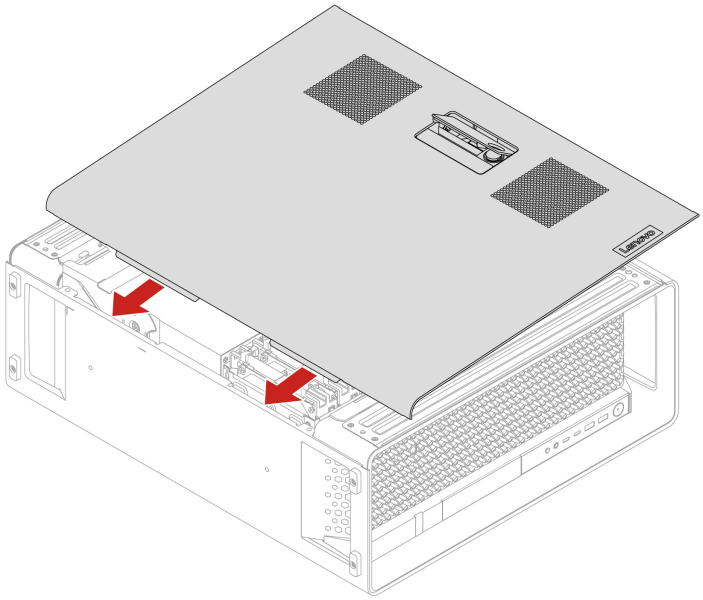

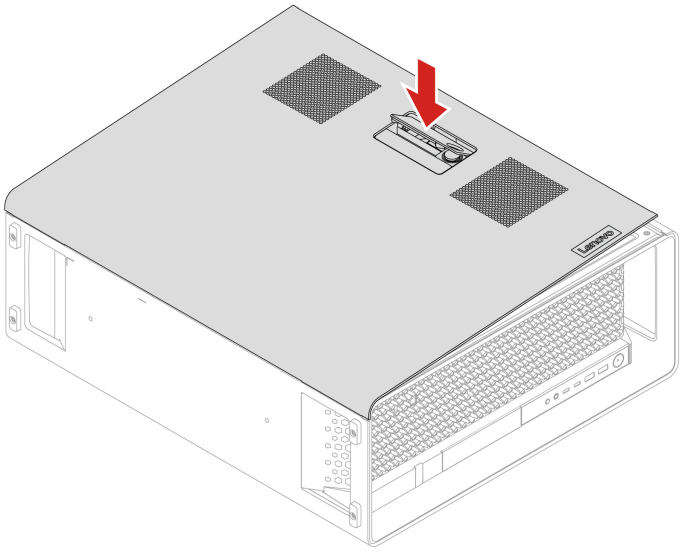

- Type-2

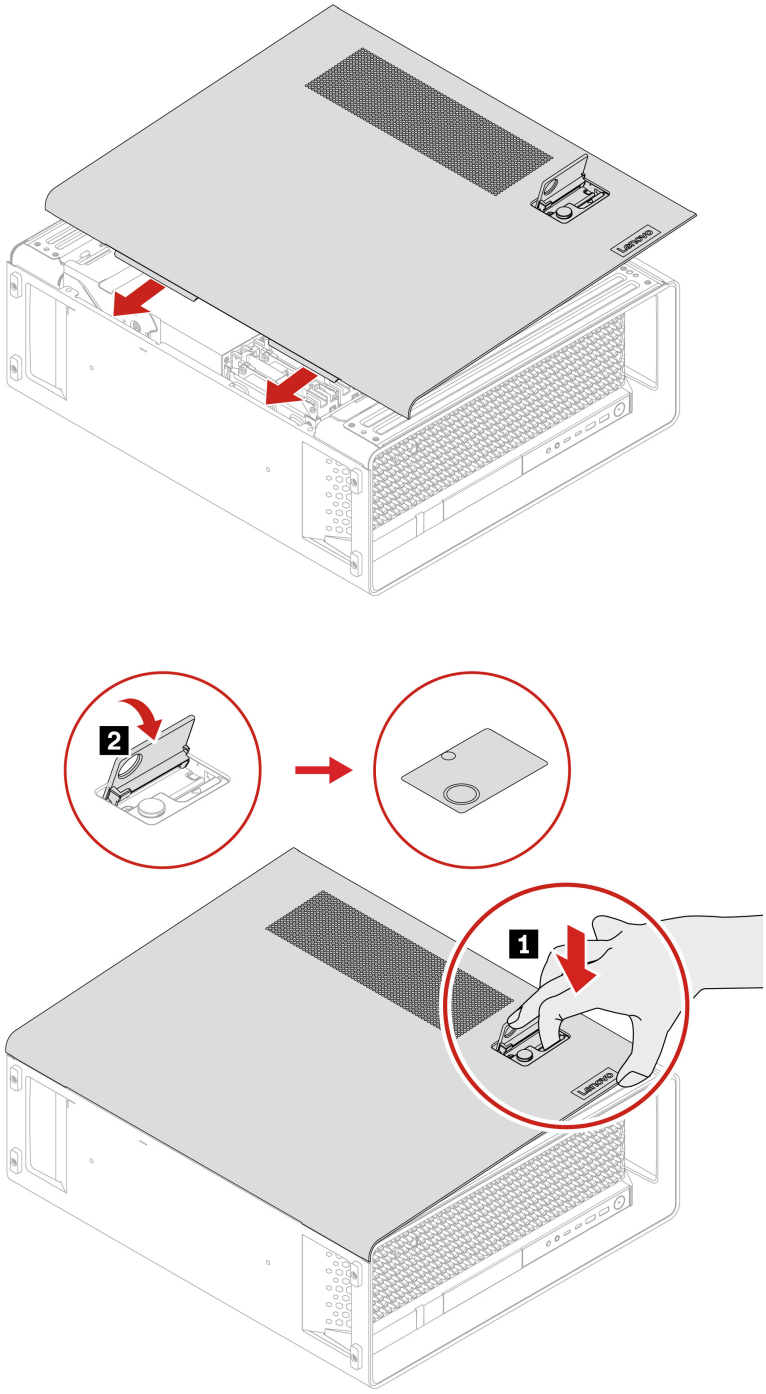

Power supply assembly

Before you start, ensure that you have read “Prerequisites for hardware replacement” on page 63.

Removal steps

1. Remove the “Side cover” on page 68.
2. Remove the power supply assembly.

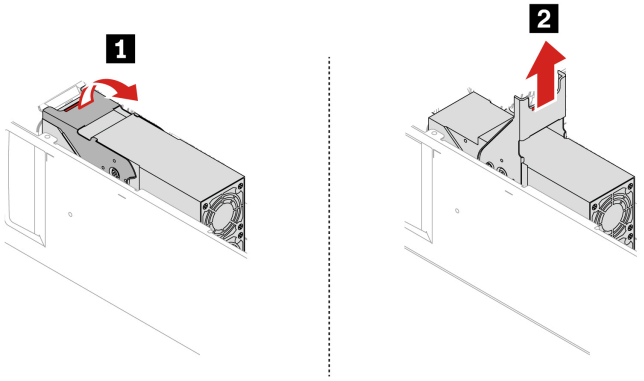

Storage drives

By reading this section, you will learn to replace storage drives in your computer. For their types, locations, and rules, see “Expansion modules” on page 32.

Optional internal storage drive cage

Before you start, ensure that you have read “Prerequisites for hardware replacement” on page 63.

Removal steps

1. Remove the “Side cover” on page 68.
2. Remove the optional internal storage drive cage.

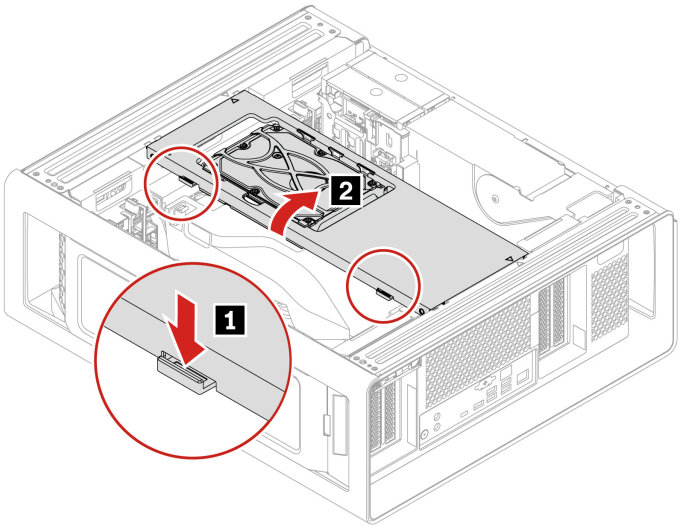

HDD in optional internal storage drive cage

Before you start, ensure that you have read “Prerequisites for hardware replacement” on page 63.

Removal steps

1. Remove the following parts, if any:
   a. “Side cover” on page 68

b. “Optional internal storage drive cage” on page 72

2. Remove the HDD with its bracket from the optional internal storage drive cage.

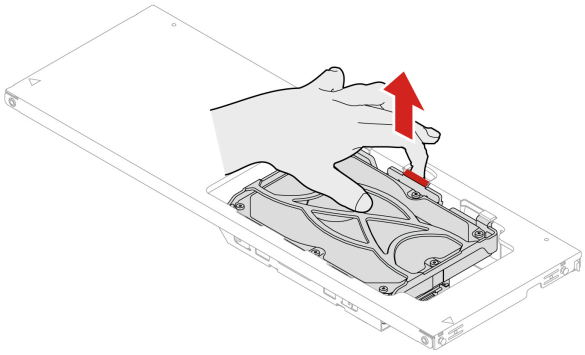

3. Remove the HDD from its bracket.

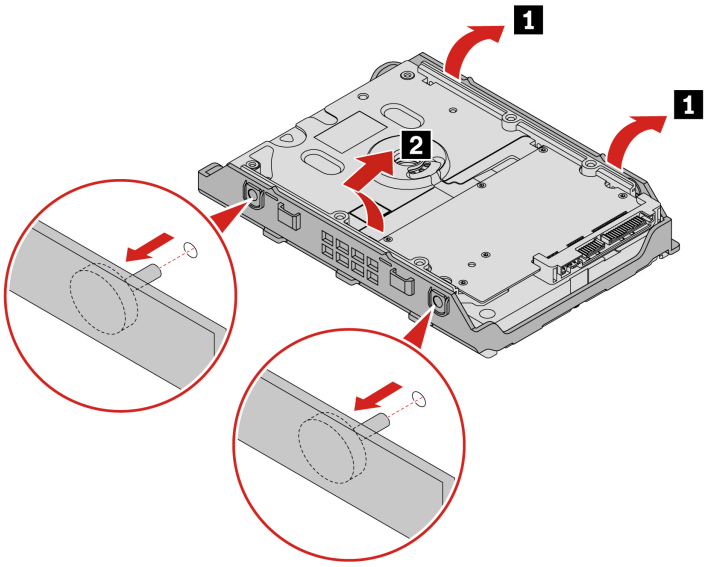

Note: When the computer is installed with NVIDIA Quadro SYNC II card or GeForce 40X0 graphics card, do not install 3.5-inch HDD in the optional internal storage drive cage.

HDD in the internal storage drive cage

Before you start, ensure that you have read “Prerequisites for hardware replacement” on page 63.

Removal steps

1. Remove the “Side cover” on page 68.
2. Remove the HDD with its bracket from the internal storage drive cage.

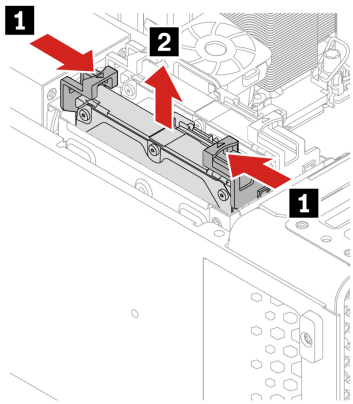

3. Remove the HDD from its bracket.

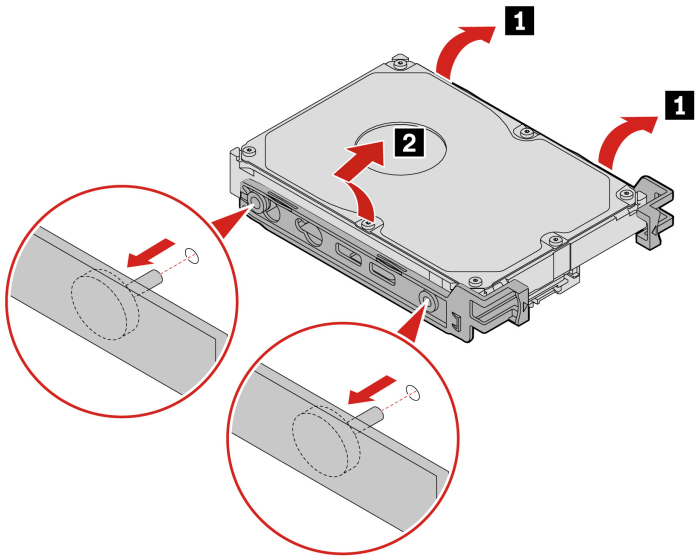

U.2 or U.3 SSD in the internal storage drive cage

Before you start, ensure that you have read “Prerequisites for hardware replacement” on page 63.

Removal steps

1. Remove the “Side cover” on page 68.
2. Remove the U.2 or U.3 SSD with its bracket from the internal storage drive cage.

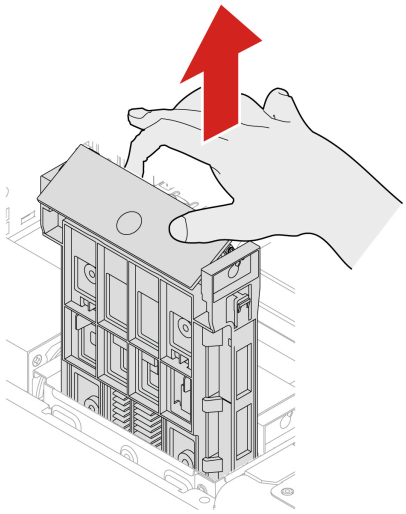

3. Remove the U.2 or U.3 SSD from its bracket.

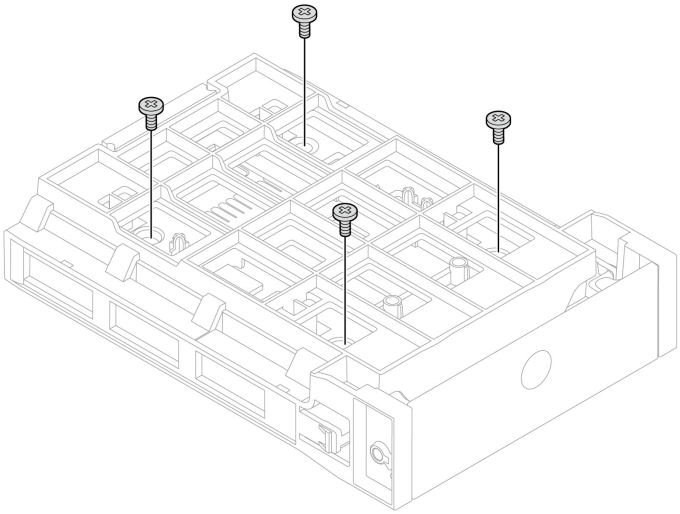

Screw specification	Quantity	Torque
M3 x 3.75 mm, Zn coated, black	4	5.0 ± 0.5 lb/in

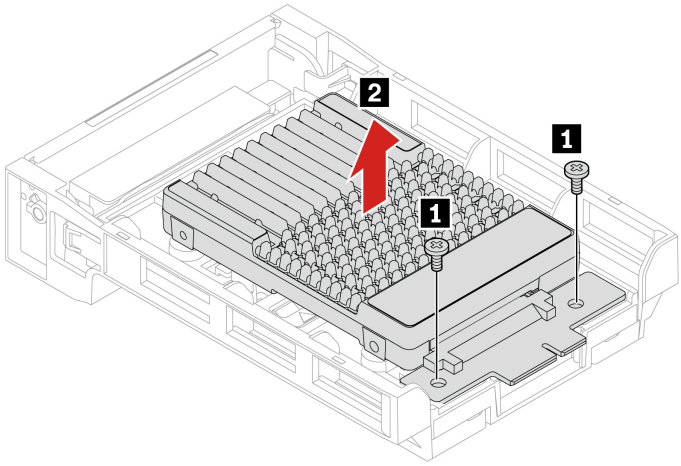

Screw specification	Quantity	Torque
M3 x 2 mm, Zn coated, blue	2	5.0 ± 0.5 lb/in

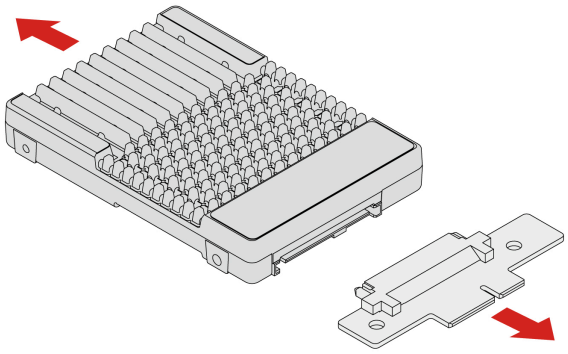

M.2 SSD bracket in internal storage drive cage

Before you start, ensure that you have read “Prerequisites for hardware replacement” on page 63.

Removal steps

1. Remove the “Side cover” on page 68.
2. Remove the M.2 SSD bracket from the chassis.

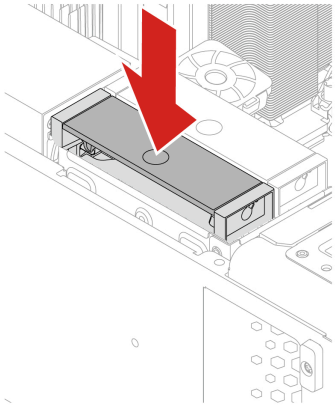

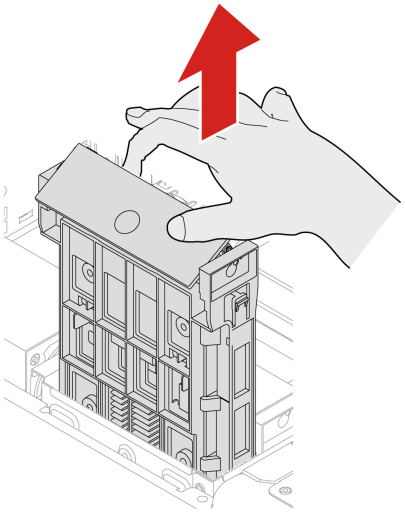

Device in the front-access storage bay

Before you start, ensure that you have read “Prerequisites for hardware replacement” on page 63.

Removal steps

1. Remove the following parts if any:
   a. “Side cover” on page 68
   b. “Optional internal storage drive cage” on page 72
   c. “Front fan” on page 102
   d. “Front-access storage fan” on page 104
2. Remove the device in the front-access storage bay, which can be an NVMe storage tray, a media card reader, or a blank bezel.
   - NVMe storage tray / media card reader:

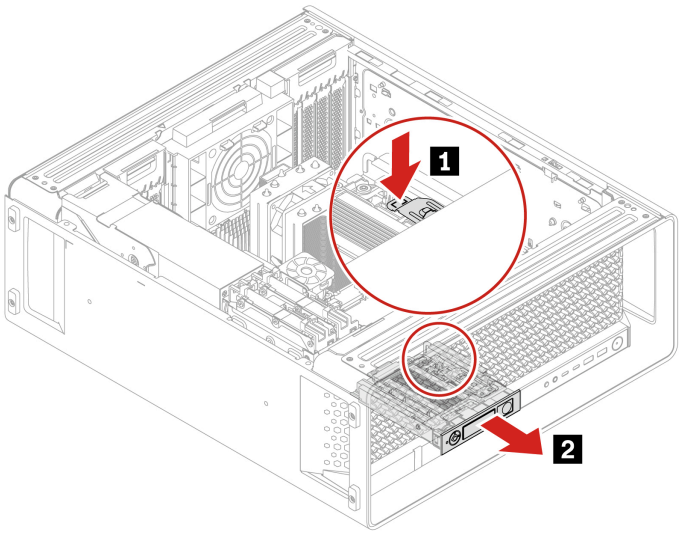

PCBA of media card reader:

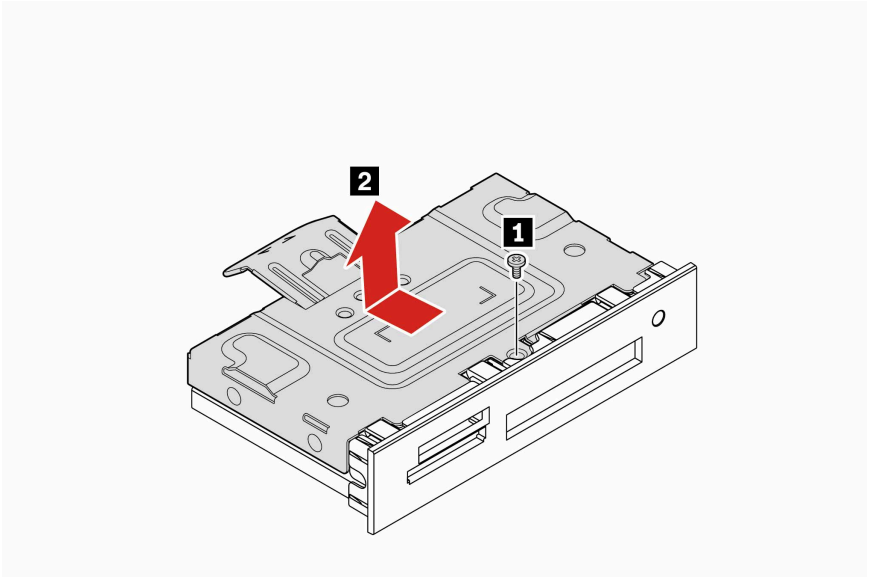

Screw specification	Quantity	Torque
M3 x 4 mm, Zn coated, blue	1	3.0 ± 0.5 lb/in

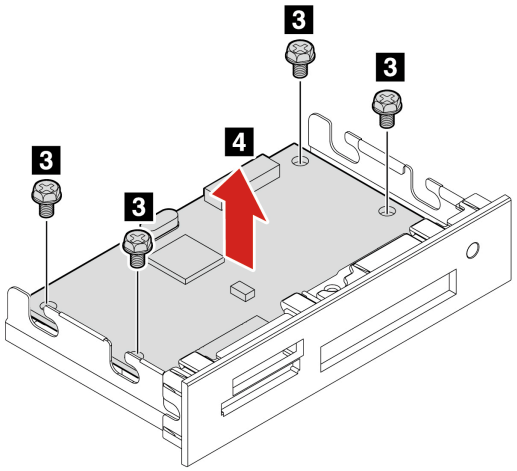

Screw specification	Quantity	Torque
M3 x 5 mm, Ni coated, black	4	5.0 ± 0.5 lb/in

- Blank bezel:

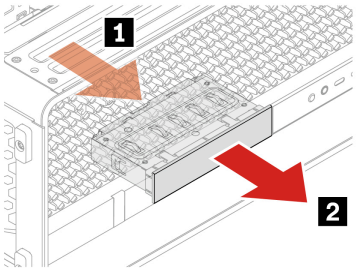

M.2 SSD storage box in NVMe storage tray

Before you start, ensure that you have read “Prerequisites for hardware replacement” on page 63.

Notes:

- 1 NVMe storage tray
- 2 M.2 SSD storage box

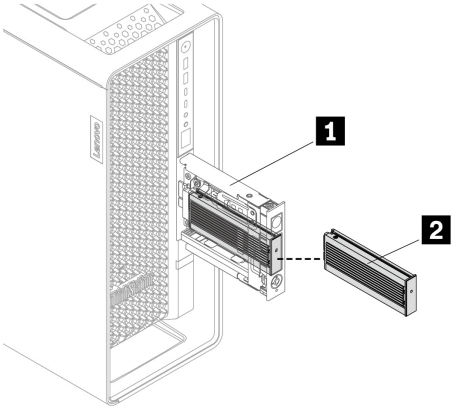

Removal steps

Remove the M.2 SSD storage box.

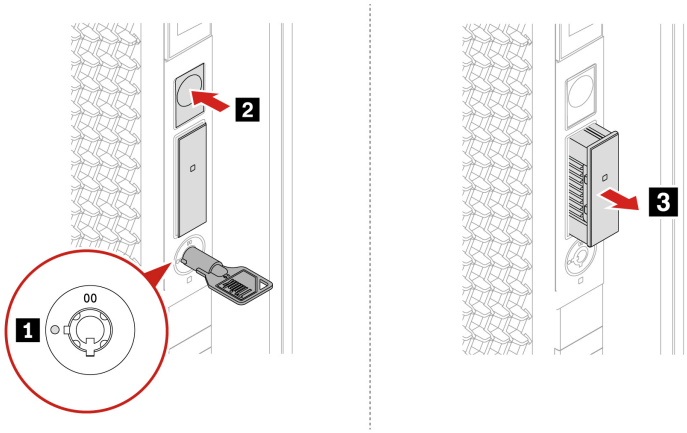

Notes:

- The lock for M.2 SSD storage box and the unlocking step are for selected models.
- The key is attached at the rear of the computer. Keys carved with xx, such as 00, 01, 02, or 03 can unlock the locks carved with the same numbers.

M.2 SSD in M.2 SSD storage box

Before you start, ensure that you have read “Prerequisites for hardware replacement” on page 63.

Removal steps

1. Remove the “M.2 SSD storage box in NVMe storage tray” on page 79.
2. Remove the M.2 SSD heatsink kit.

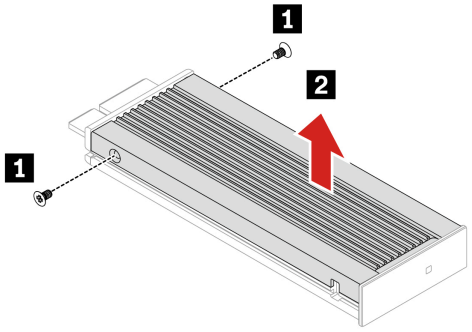

Screw specification	Quantity	Torque
M2 x 3.6 mm, Zn coated, blue	2	1.5± 0.2 lb/in

3. Remove the M.2 SSD.

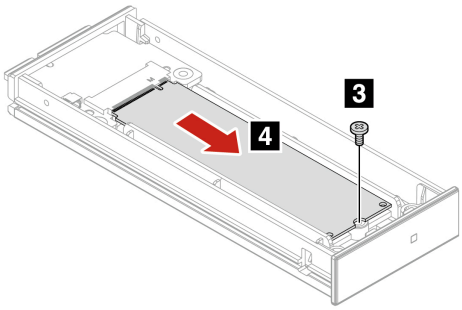

Screw specification	Quantity	Torque
M2 x 4.5 mm, Zn coated, black	1	1.5± 0.2 lb/in

On-board M.2 SSD

Before you start, ensure that you have read “Prerequisites for hardware replacement” on page 63.

Install the on-board M.2 SSDs in the following order.

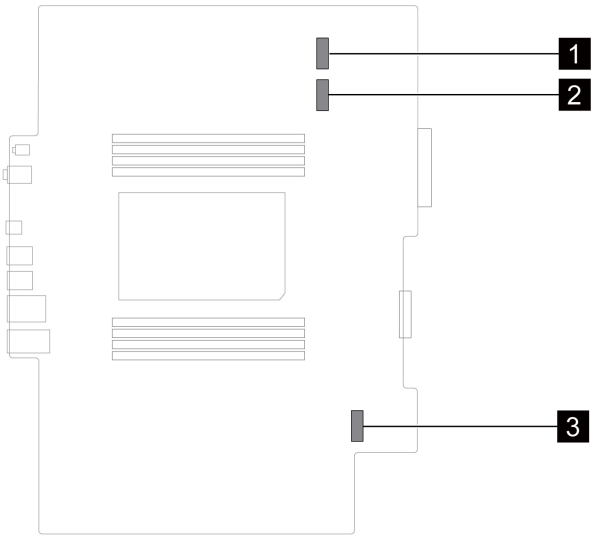

Removal steps

1. Remove the following parts if any:
   a. “Side cover” on page 68
   b. “Optional internal storage drive cage” on page 72
2. Remove the on-board M.2 SSD with its heatsink kit.

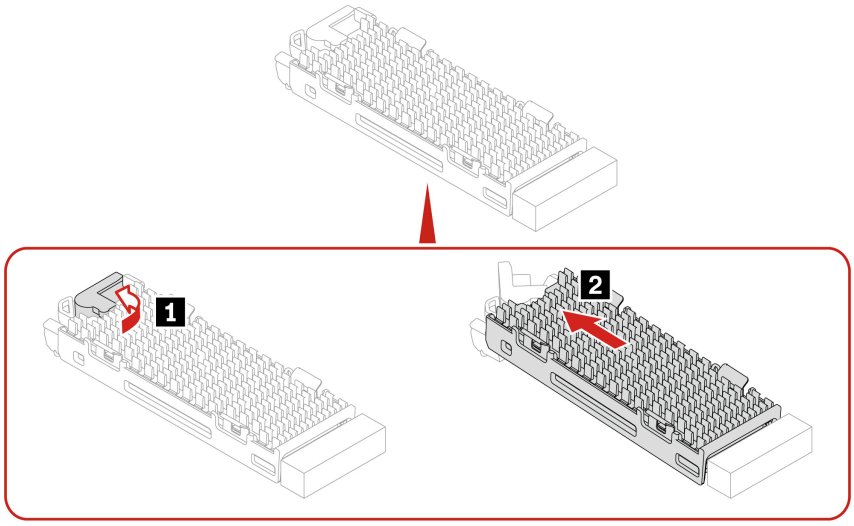

3. Remove the M.2 SSD from its heatsink kit.
   - Gen 4 M.2 SSD

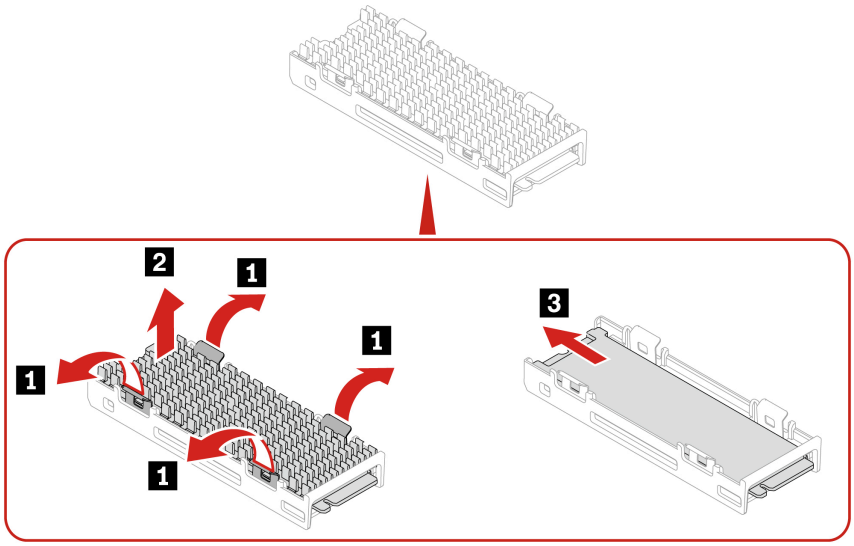

- Gen 5 M.2 SSD

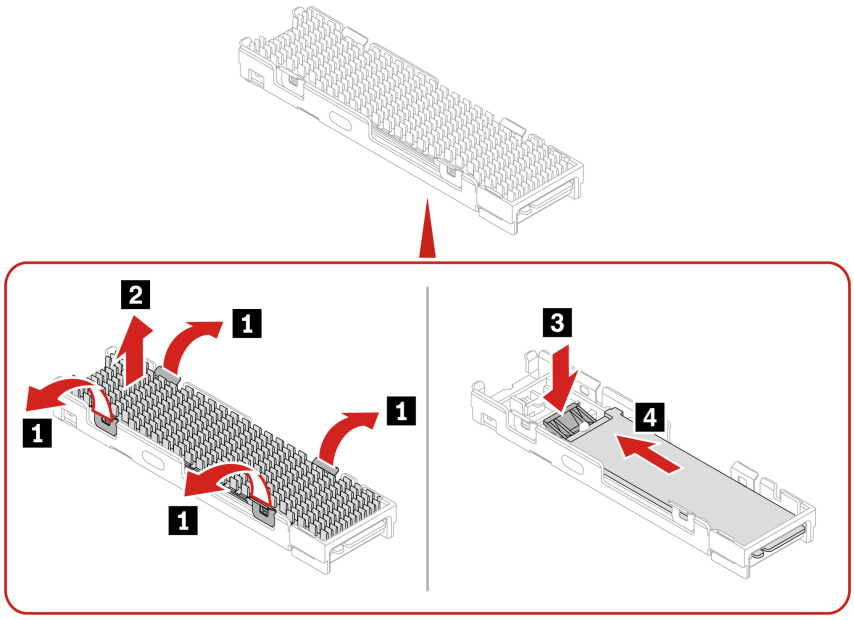

Installation steps

1. Remove the protective film from both heatsink and thermal pad before installing the on-board M.2 SSD.
2. Install the M.2 SSD into its heatsink kit.

   Note: For better performance, it's recommended that you install M.2 SSDs of the same generation to the on-board SSD slots.

   - Gen 4 M.2 SSD

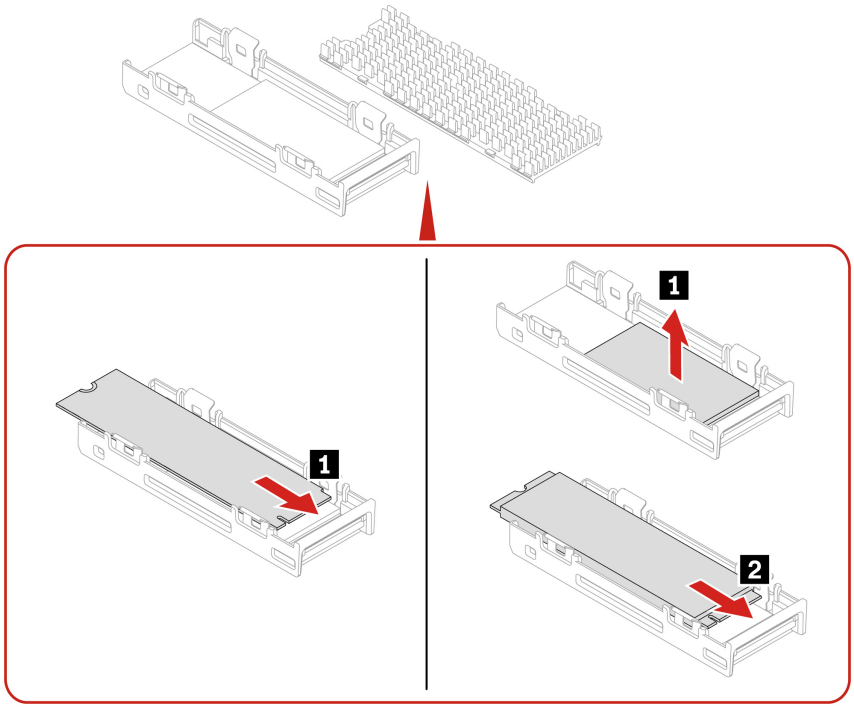

Note: If the new Gen 4 M.2 SSD is double-sided, remove the 1.5-mm thick thermal pad upward first.

- Gen 5 M.2 SSD

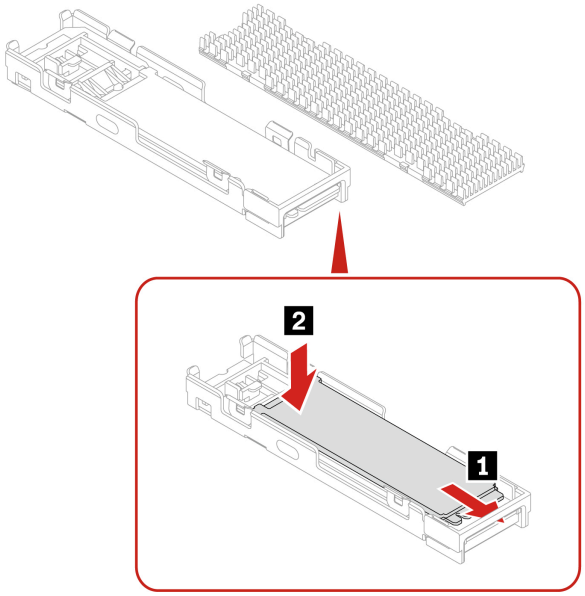

3. Install the M.2 SSD heatsink.

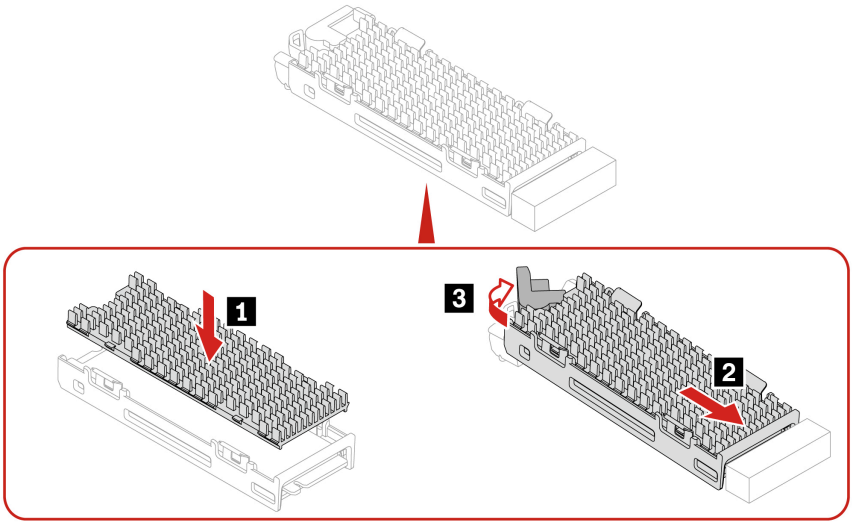

On-board M.2 SSD holder

Before you start, ensure that you have read “Prerequisites for hardware replacement” on page 63.

Replacement steps

1. Remove the following parts if any:
   a. “Side cover” on page 68
   b. “Optional internal storage drive cage” on page 72
   c. “Front fan” on page 102
   d. “Lower PCIe fan and internal storage drive fan” on page 104
   e. “On-board M.2 SSD” on page 81
2. Replace the on-board M.2 SSD holder.
   - Type 1

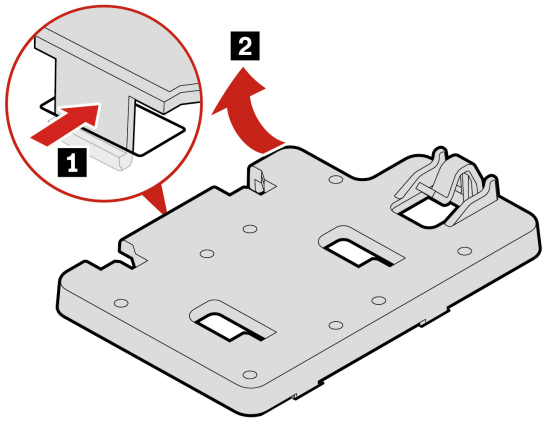

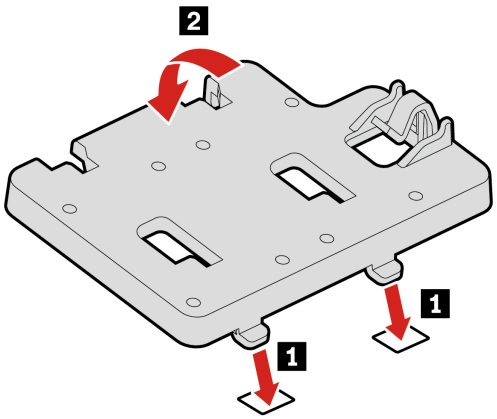

- Type 2

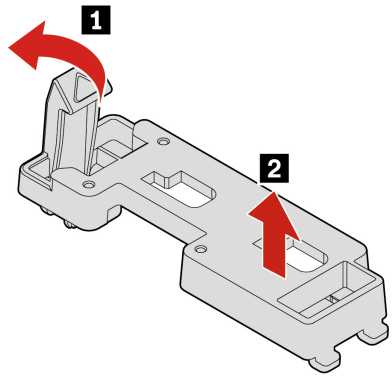

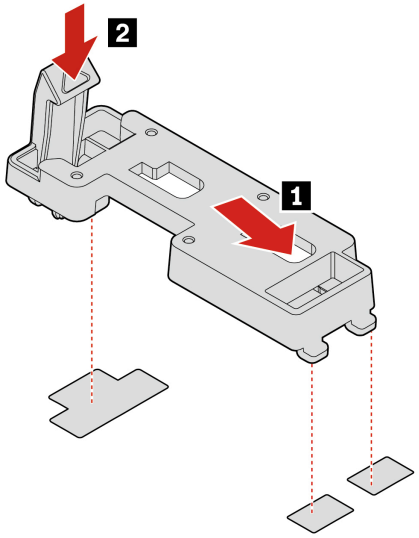

M.2 SSD in a PCIe adapter

- Before you start, ensure that you have read “Prerequisites for hardware replacement” on page 63.
- Install M.2 solid-state drives in the following order as shown:

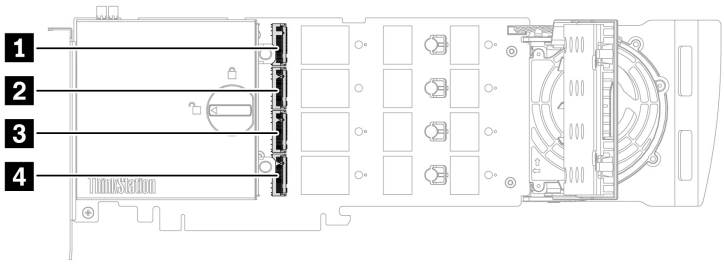

Replacement steps

1. Remove the left side cover. See “Side cover” on page 68.
2. Remove the M.2 SSD PCIe adapter from the PCIe card slot. See “Full-length PCIe card” on page 96.
3. Open the cover.

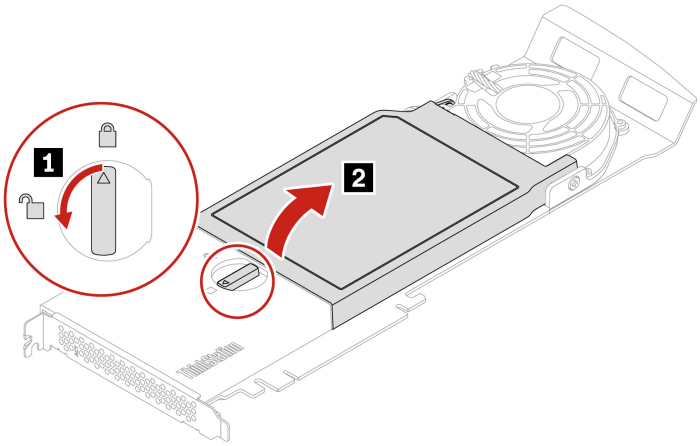

4. Remove the SSD.

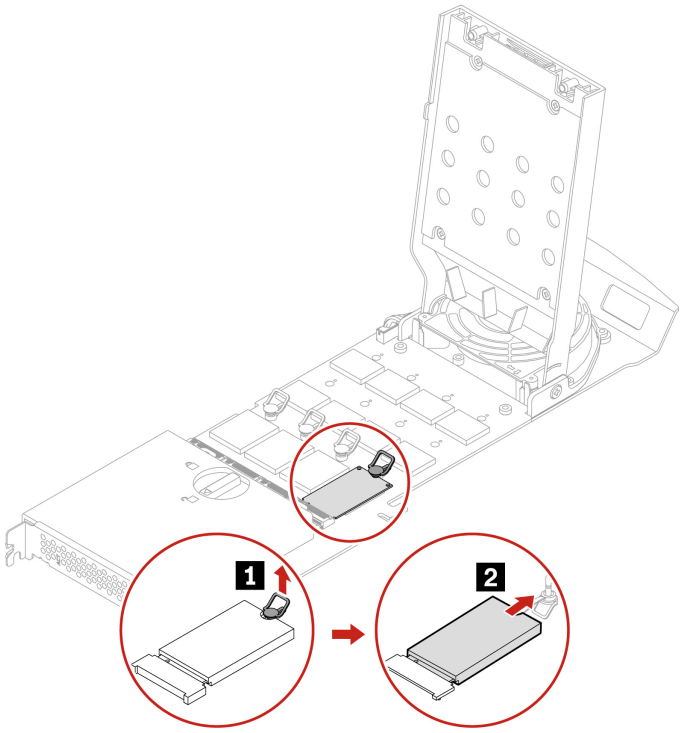

5. If necessary, move the retention latch to an appropriate location to suit the length of the new M.2 SSD.

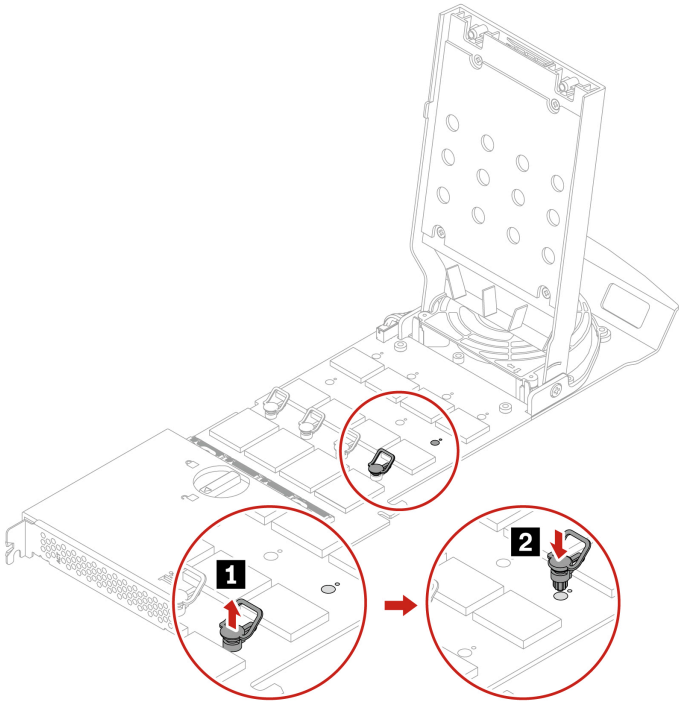

6. Remove the film and release the latch.

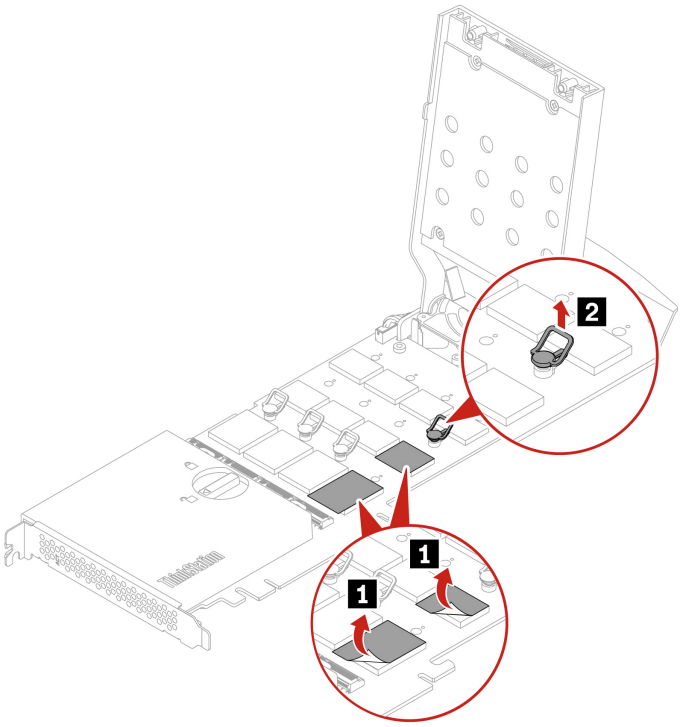

7. Install a new SSD.

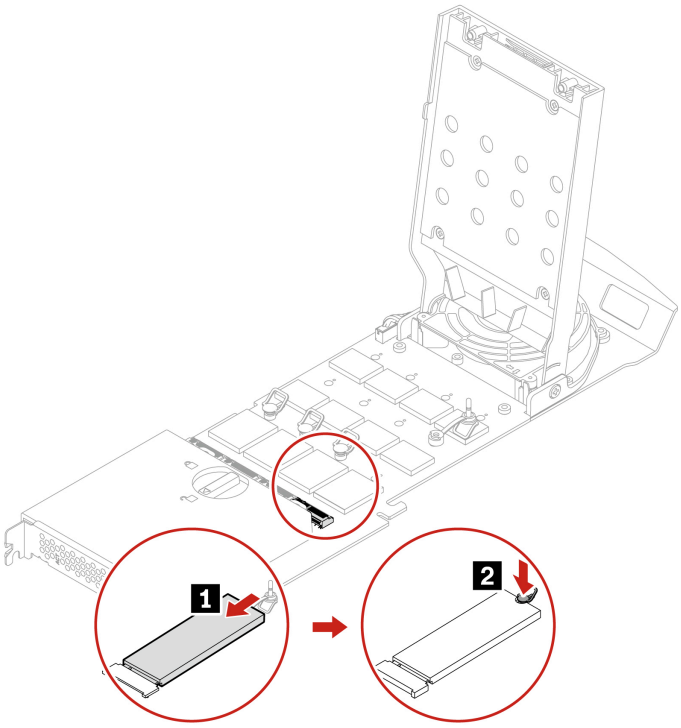

8. Close the cover.

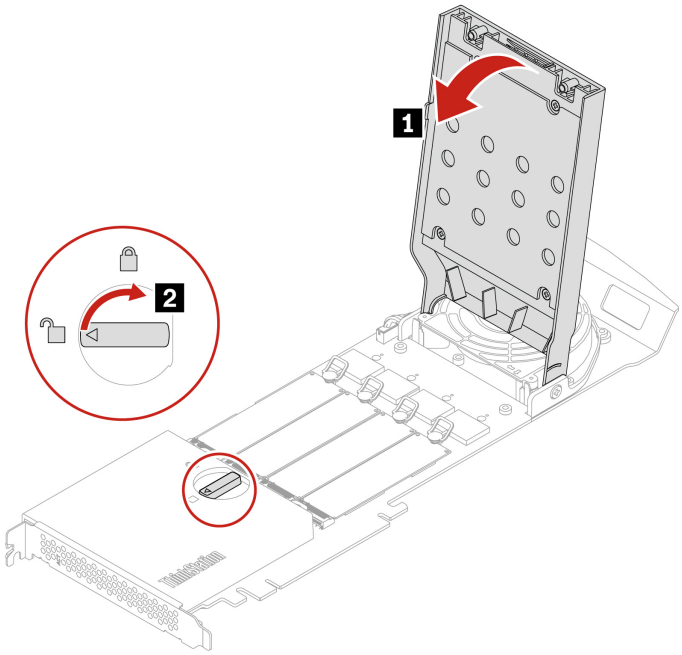

9. Install the M.2 SSD PCIe adapter in a PCIe x 16 card slot on the system board. See “System board illustration” on page 61.
10. Reinstall all removed parts. Then, reconnect the power cord and all disconnected cables to the computer.

U.2 or U.3 SSD in a PCIe adapter

Before you start, ensure that you have read “Prerequisites for hardware replacement” on page 63.

Replacement steps

1. Remove the left side cover. See “Side cover” on page 68.
2. Remove the U.2 or U.3 SSD PCIe adapter from the PCIe card slot. See “Full-length PCIe card” on page 96.
3. Open the cover.

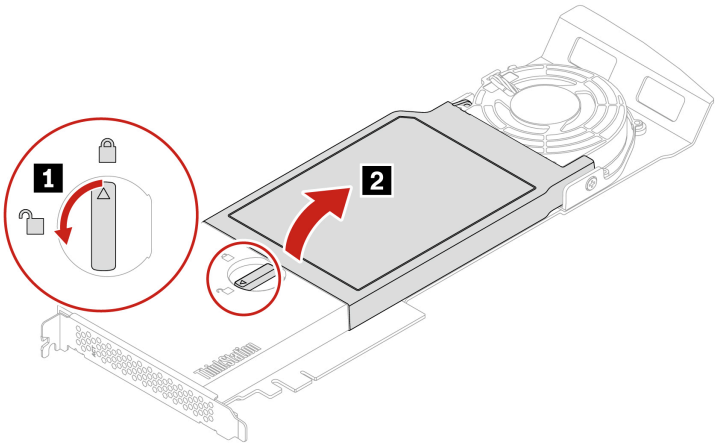

4. Remove the SSD.

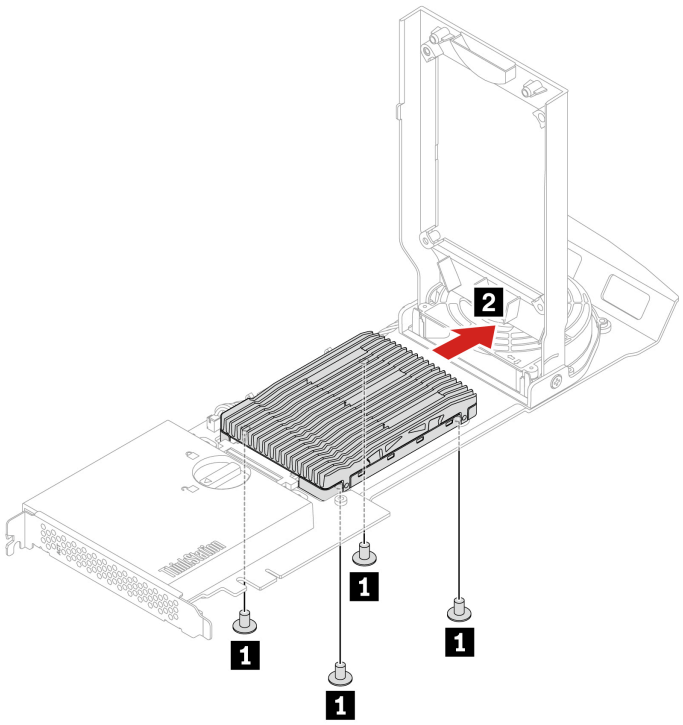

Screw specification	Quantity	Torque
M3 x 5 mm, Zn coated, black	4	5.0 ± 0.5 lb/in

5. Install a new SSD.

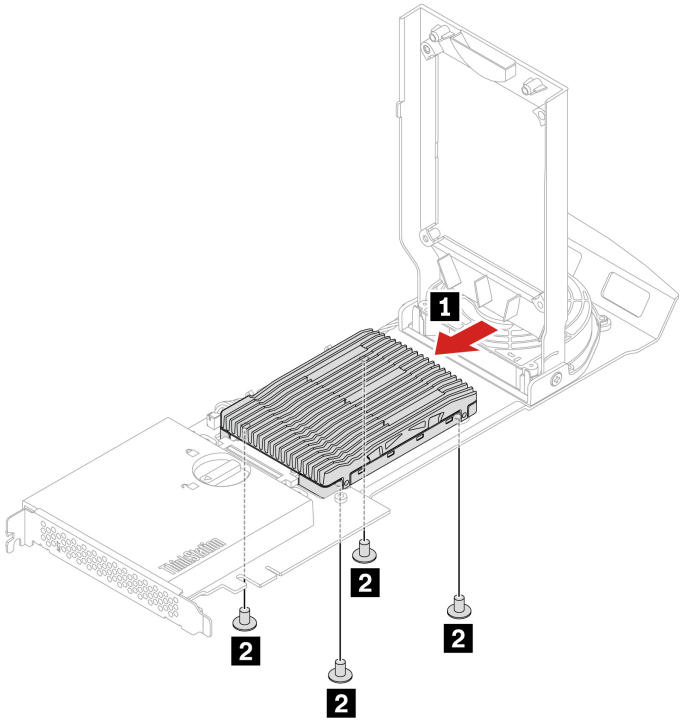

Screw specification	Quantity	Torque
M3 x 5 mm, Zn coated, black	4	5.0 ± 0.5 lb/in

6. Close the cover.

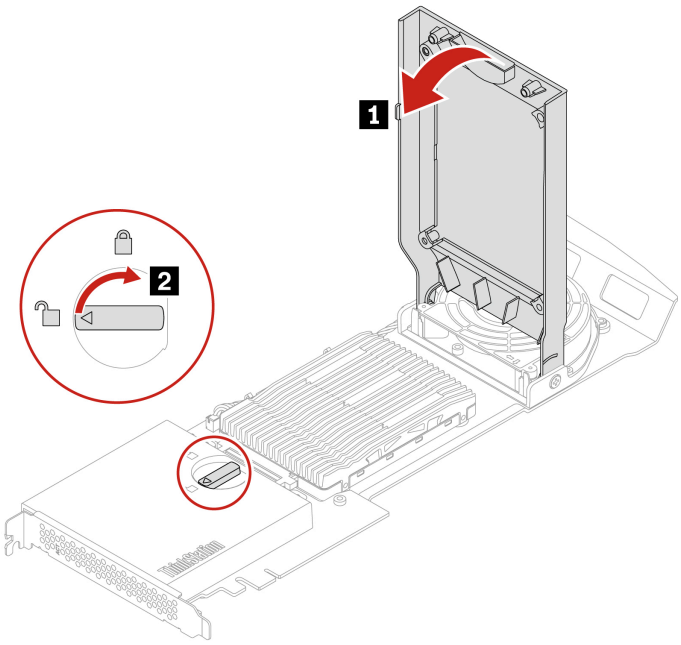

7. Install the U.2 or U.3 SSD PCIe adapter in a PCIe x 16 card slot on the system board. See “System board illustration” on page 61.
8. Reinstall all removed parts. Then, reconnect the power cord and all disconnected cables to the computer.

PCIe cards

By reading this section, you will learn to replace PCIe cards, including graphics cards, in your computer.

NVLINK retainer

Before you start, ensure that you have read “Prerequisites for hardware replacement” on page 63.

Removal steps

1. Remove the “Side cover” on page 68.
2. Remove the NVLINK retainer.

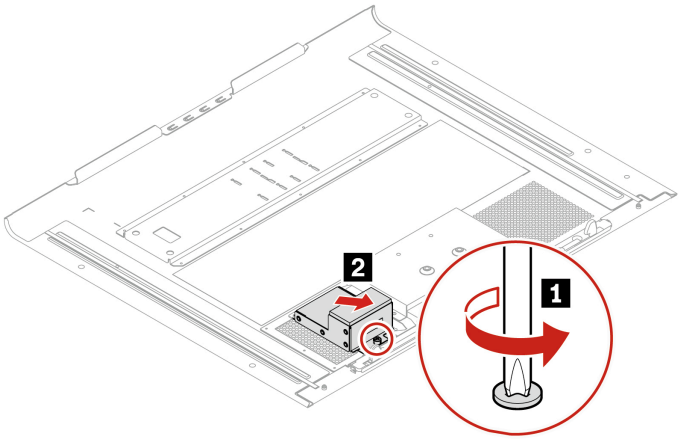

Screw specification	Quantity	Torque
M3 x 5 mm, Ni coated, black	1	5.0 ± 0.5 lb/in

Note: The screw cannot be removed from the NVLINK retainer.

NVLINK bridge

Before you start, ensure that you have read “Prerequisites for hardware replacement” on page 63.

Removal steps

1. Remove the “Side cover” on page 68.
2. Remove the NVLINK bridge.

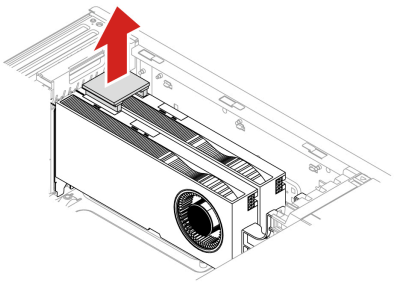

Super capacitor module

Before you start, ensure that you have read “Prerequisites for hardware replacement” on page 63.

Removal steps

1. Remove the “Side cover” on page 68.
2. Remove the super capacitor module.

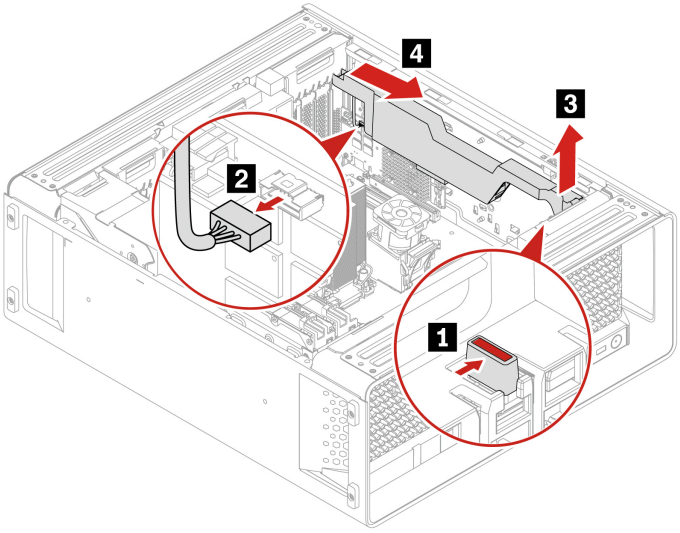

Installation notice

When installing the super capacitor module, connect the super capacitor module cable to the J14 connector on the RAID card.

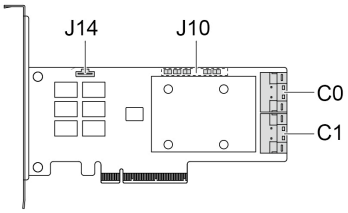

PCIe card bracket

Before you start, ensure that you have read “Prerequisites for hardware replacement” on page 63.

Removal steps

1. Remove the “Side cover” on page 68.
2. Open the handle and remove the PCIe card bracket.

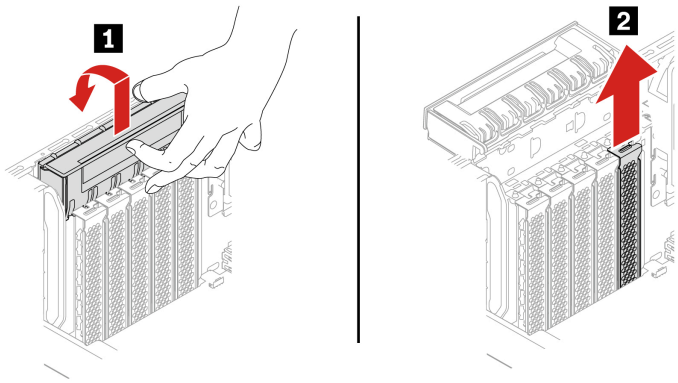

Half-length PCIe card

Before you start, ensure that you have read “Prerequisites for hardware replacement” on page 63.

Removal steps

1. Remove the “Side cover” on page 68.
2. Record the PCIe card cable routing and connections (if any), then disconnect the cables from the system board.
3. Remove the PCIe card.
   a. Remove the PCIe card retainer. The PCIe card retainer is only available on some PCIe cards.

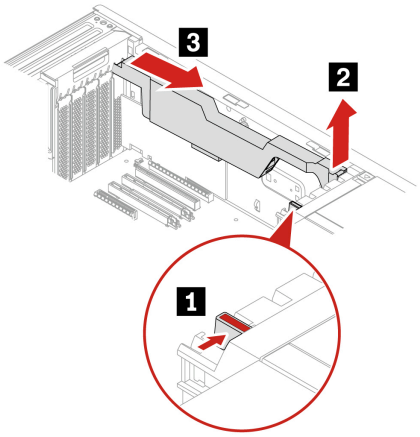

   b. Open the handle and remove the PCIe card. The card might fit tightly into the slot. If necessary, alternately move each side of the card a small amount until the card is removed from the slot.

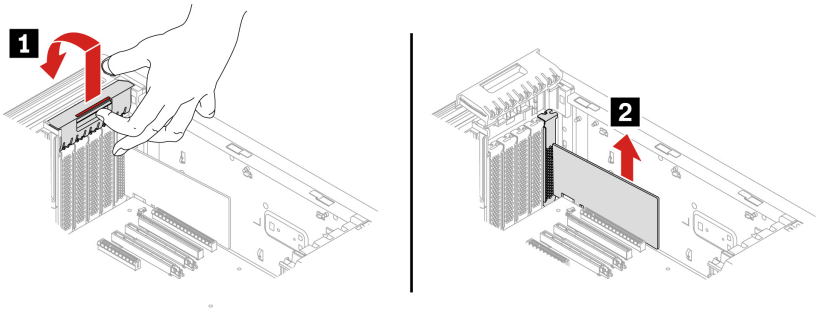

   c. For some Ethernet Adapter cards, the following fiber modules can be removed.

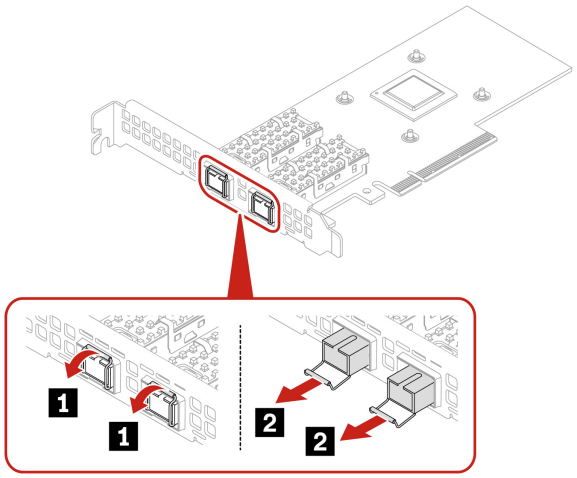

Full-length PCIe card

Before you start, ensure that you have read “Prerequisites for hardware replacement” on page 63.

Replacement steps

1. Remove the “Side cover” on page 68.
2. Record the PCIe card cable routing and connections (if any), then disconnect the cables from the system board.
3. Remove the PCIe card.
   a. Open the handle.

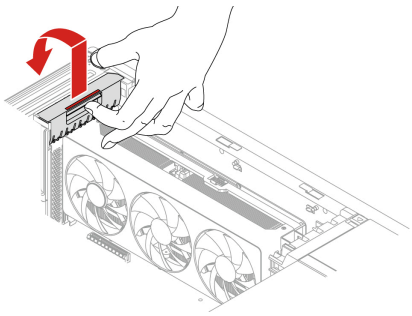

   b. Remove the screws that fix the PCIe card to the chassis (if any).

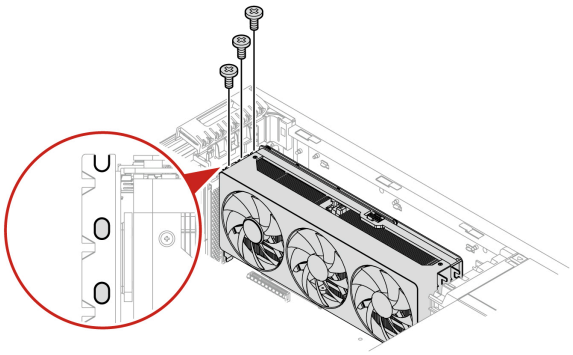

Screw specification	Quantity	Torque
M3.5 x 5 mm, Ni coated, black	3	5 ± 0.5 lb/in

c. Unlock the front card guide, then remove the PCIe card. The card might fit tightly into the slot. If necessary, alternately move each side of the card a small amount until the card is removed from the slot.

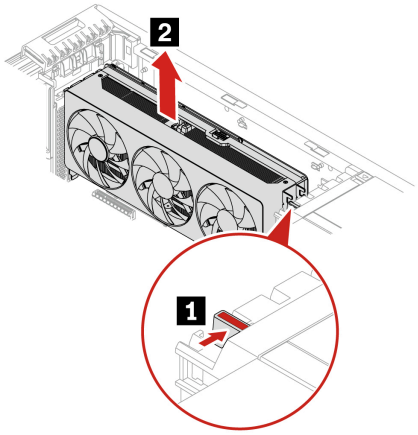

d. Remove the PCIe card extender if needed.

- For computer models with GFX RTX 4000 Ada, the graphics card and the PCIe card extender work as a CRU assembly. Do not try to remove the extender.
- For computer models with double-width or wider graphics cards (such as NVIDIA RTX 6000 Ada, GeForce 40X0/50X0, or RTX Pro 6000 BW), the PCIe card extender is a customized CRU part. You can remove it according to the following illustration.
  - Type-1

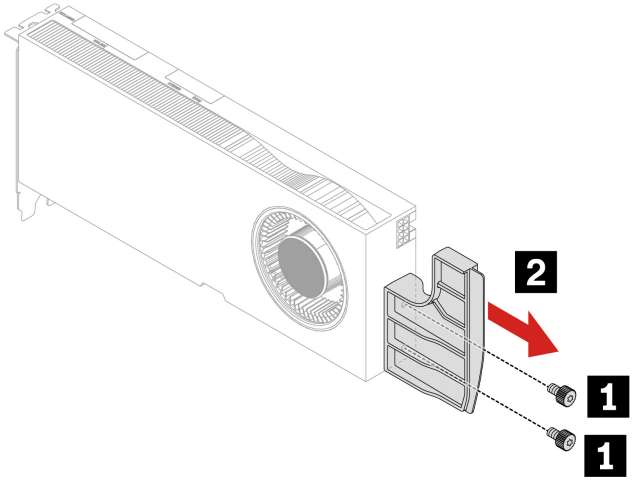

Screw specification	Quantity	Torque
M3 x 5.5 mm, Ni coated, black	2	3-3.5 lb/in

  - Type-2

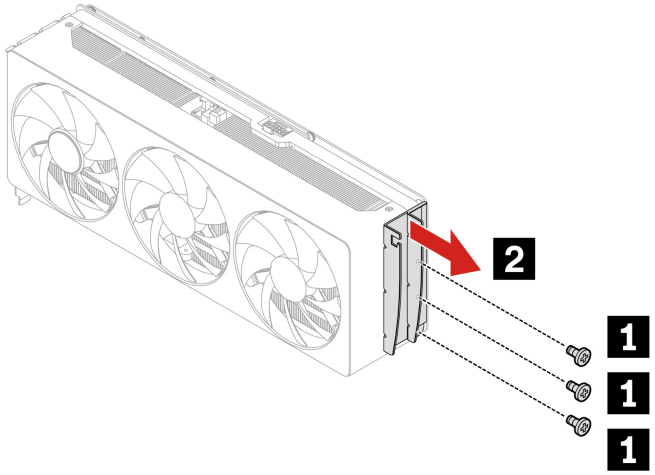

Screw specification	Quantity	Torque
M3 x 5 mm, Ni coated, black	3	3 ± 0.5 lb/in

– Type-3

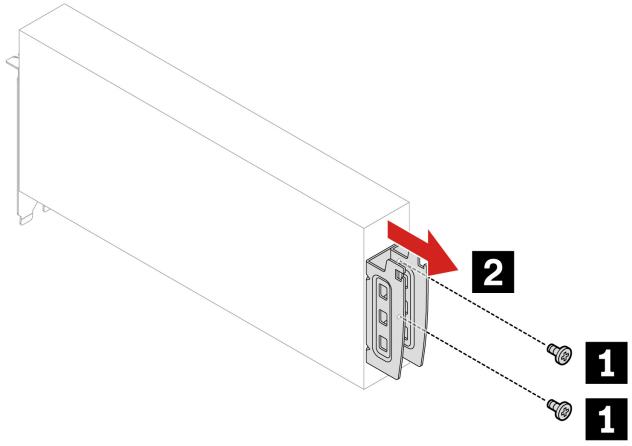

Screw specification	Quantity	Torque
M3 x 5 mm, Ni coated, black	2	3 ± 0.5 lb/in

4. Install the PCIe card and other removed parts in reverse order.

Notes:

- When installing, take care not to route any cables through the side cover handle area to ensure proper closure.
- For compatible models without a pre-installed GeForce 50X0 PCIe card, you'll need an L-shaped screwdriver (not included) to access the chassis mounting screws on the rear panel, as the card doesn't include mounting screws.

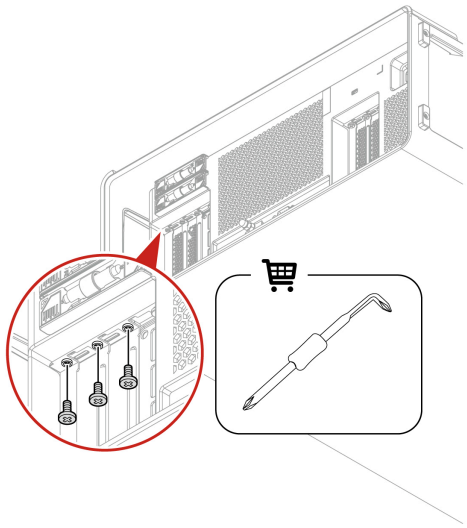

- For PCIe card installation order and special installation rules for certain PCIe cards, see “PCIe card installation rule” on page 99.

PCIe card installation rule

Before installing the PCIe card, you need to remove “PCIe card bracket” on page 94.

Install PCIe cards according to the following order and the special installation rules for certain PCIe cards.

- **Installation order**

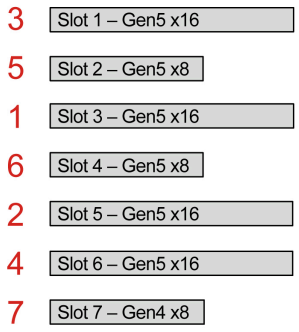

Note: Graphics cards installed in the PCIe slots should be the same.

- **Special installation rules for certain PCIe cards**

PCIe card (if supported)	Installation rule
NVIDIA GeForce RTX 40X0 or 50X0 graphics card	Install in Slot 1.
Two RTX A6000 graphics cards with NVLink	Install in Slot 1 and Slot 3.
RTX Pro 6000 BW Workstation Edition (600W) graphics card with top-venting thermal kit	– Electrical connection: Slot 3 – Physical occupancy: Slots 1–4 (inclusive) due to thermal kit
AMD Radeon PRO W7900 graphics card	Install in Slot 1 or Slot 5 (Slot 1 is prior to Slot 5).

PCIe card (if supported)	Installation rule
– M.2/U.2/U.3 SSD PCIe adapter – NVIDIA ConnectX-6 Ethernet adapter – Intel X710-T2L Ethernet adapter – Intel E810-DA2 Ethernet adapter	Install in Slot 3, Slot 5, Slot 1, or Slot 6.
BMC PCIe adapter	Install in Slot 7.
USB4 PCIe card	Install in Slot 6 or Slot 7.

Cable connection

Note: The connectors on the cards or system board might look slightly different from the illustrations.

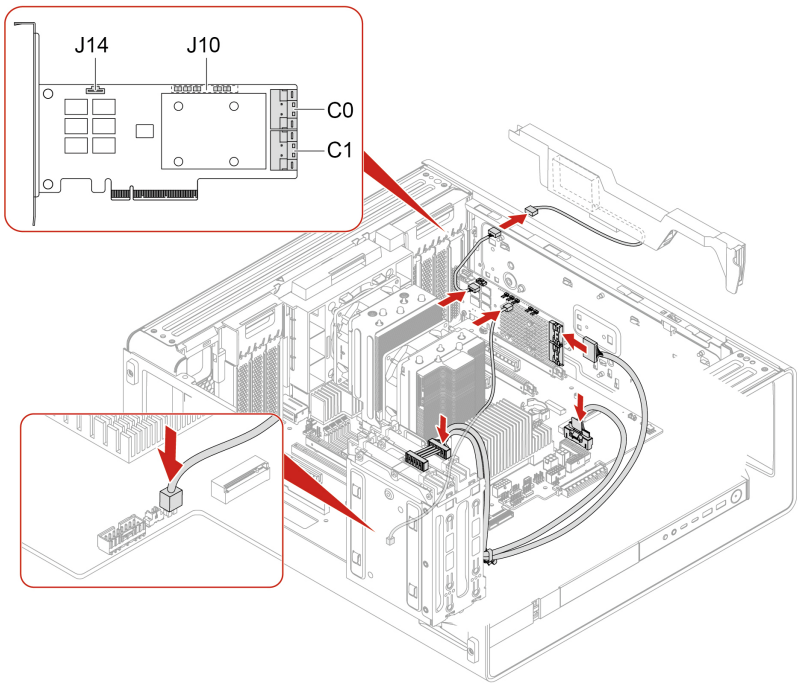

Figure 1. Cable connection for BCM9560 RAID AIC

Notes:

- C0 connector priority is higher than C1 connector.
- Internal storage drive cage priority: 1a, 1b, and 5. See “Expansion modules” on page 32.

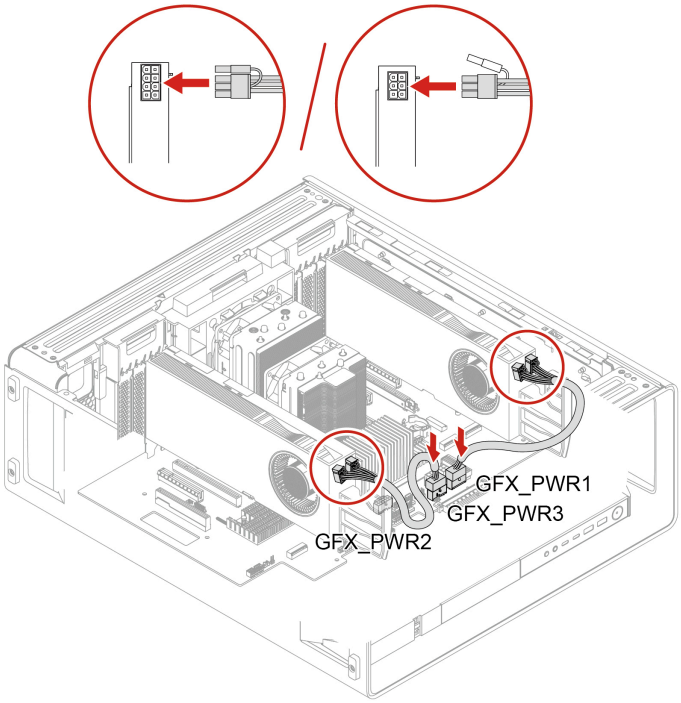

Figure 2. GFX GV100/RTX A5000/RTX A4000 Aux power connection

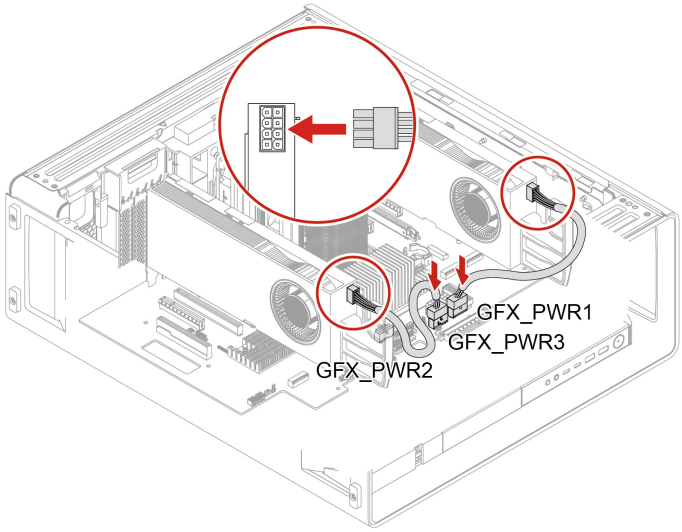

Figure 3. GFX RTX A6000 Aux power connection

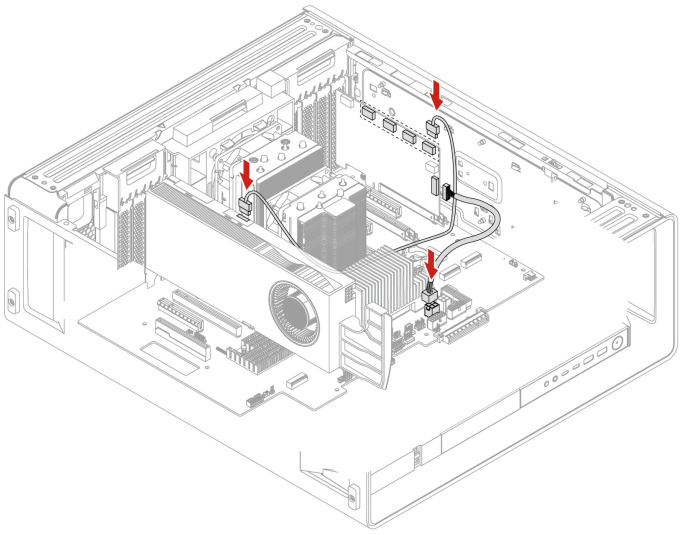

Figure 4. Cable connection for NVIDIA Quadro SYNC II card

Fans

By reading this section, you will learn to replace the fans in your computer.

Front fan

Before you start, ensure that you have read “Prerequisites for hardware replacement” on page 63.

Removal steps

1. Remove the following parts if any:
   a. “Side cover” on page 68
   b. “Optional internal storage drive cage” on page 72
2. Remove the front fan.

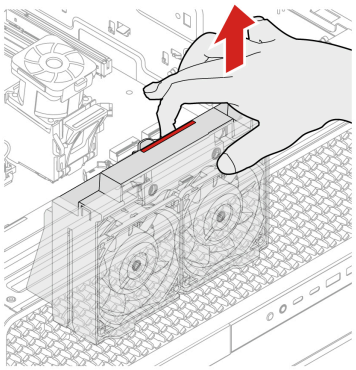

Rear fan

Before you start, ensure that you have read “Prerequisites for hardware replacement” on page 63.

Removal steps

1. Remove the following parts if any:
   a. “Side cover” on page 68
   b. “Optional internal storage drive cage” on page 72
2. Remove the rear fan.

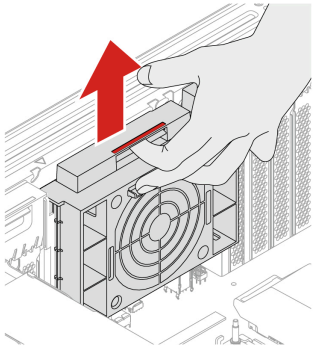

Upper PCIe fan

Before you start, ensure that you have read “Prerequisites for hardware replacement” on page 63.

Removal steps

1. Remove the following parts if any:
   a. “Side cover” on page 68
   b. “Optional internal storage drive cage” on page 72
   c. “Front fan” on page 102
2. Remove the upper PCIe fan.

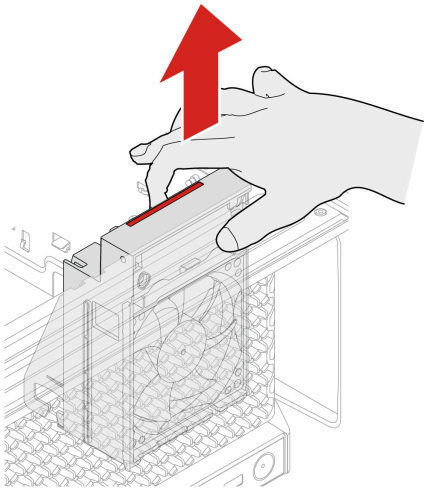

Lower PCIe fan and internal storage drive fan

Before you start, ensure that you have read “Prerequisites for hardware replacement” on page 63.

Removal steps

1. Remove the following parts if any:
   a. “Side cover” on page 68
   b. “Optional internal storage drive cage” on page 72
   c. “Front fan” on page 102
2. Remove the lower PCIe fan and internal storage drive fan together.

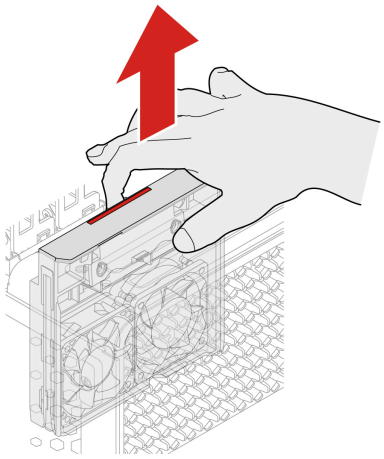

3. Remove the internal storage drive fan.

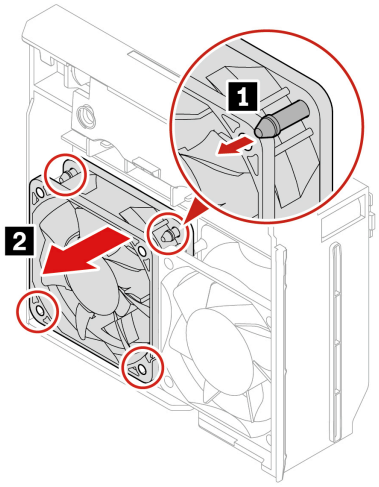

Front-access storage fan

Before you start, ensure that you have read “Prerequisites for hardware replacement” on page 63.

Removal steps

1. Remove the following parts if any:
   a. “Side cover” on page 68
   b. “Optional internal storage drive cage” on page 72
2. Remove the front-access storage fan.

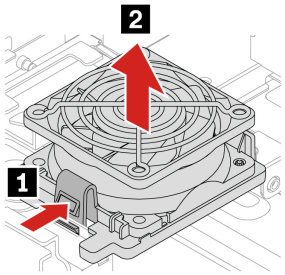

Memory fan and air duct

Before you start, ensure that you have read “Prerequisites for hardware replacement” on page 63.

Removal steps

1. Remove the following parts if any:
   a. “Side cover” on page 68
   b. “Optional internal storage drive cage” on page 72
2. Remove the memory fan and air duct.

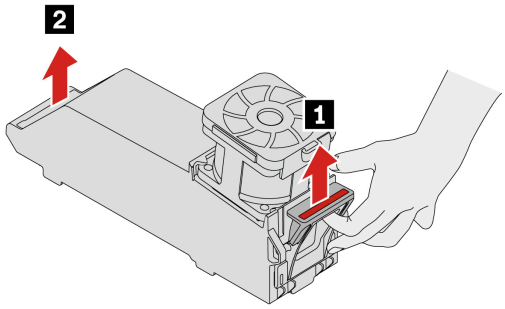

Top-venting thermal fan

Before you start, ensure that you have read “Prerequisites for hardware replacement” on page 63.

Removal steps

1. Remove the following parts if any:
   a. “Side cover” on page 68
   b. “PCIe cards” on page 92
2. Disconnect the fan cable from the flex I2C connector on the system board. See “System board illustration” on page 61.

3. Open the handle.

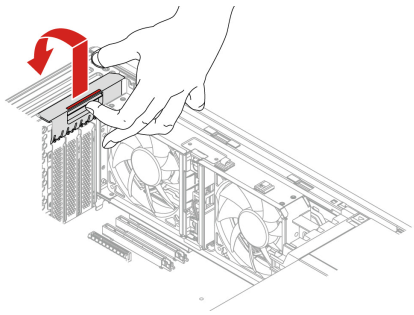

4. Remove the top-venting thermal fan.

   Note: When installing, take care not to route any cables through the side cover handle area to ensure proper closure.

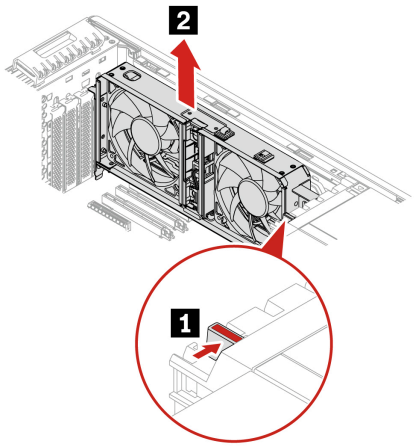

Top-venting air duct

Before you start, ensure that you have read “Prerequisites for hardware replacement” on page 63.

Replacement steps

1. Remove the following parts if any:
   a. “Side cover” on page 68
   b. “PCIe cards” on page 92
   c. “Top-venting thermal fan” on page 105
2. Remove the top-venting air duct.

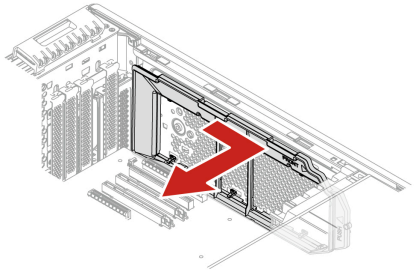

3. Install the top-venting air duct.

   Note: For optimal alignment, remove the top cover before installing the top-venting air duct.

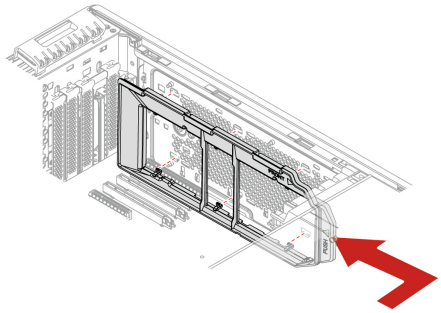

Memory module

- Before you start, ensure that you have read “Prerequisites for hardware replacement” on page 63.
- Do not replace the memory module until the LED indicator on the system board goes off. It indicates that the system is completely discharged of electricity.

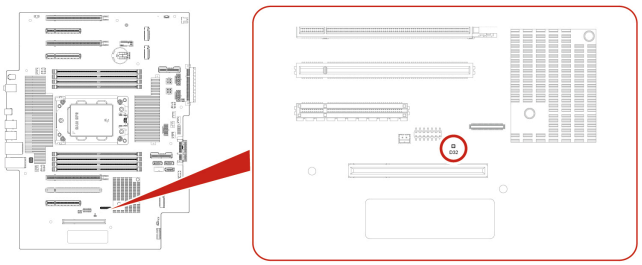

Removal steps

1. Remove the following parts if any:
   a. “Side cover” on page 68
   b. “Optional internal storage drive cage” on page 72
   c. “Memory fan and air duct” on page 105

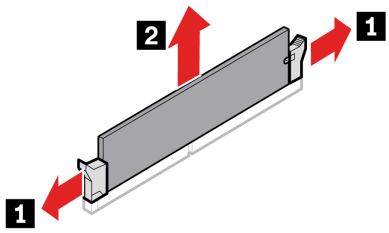

Installation steps

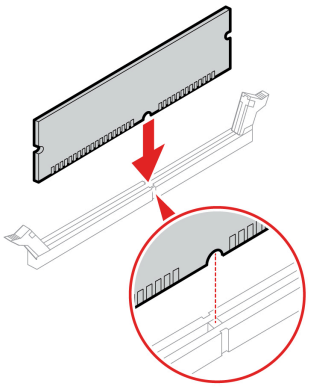

Note: Ensure that you install memory modules in the order shown in the following illustration.

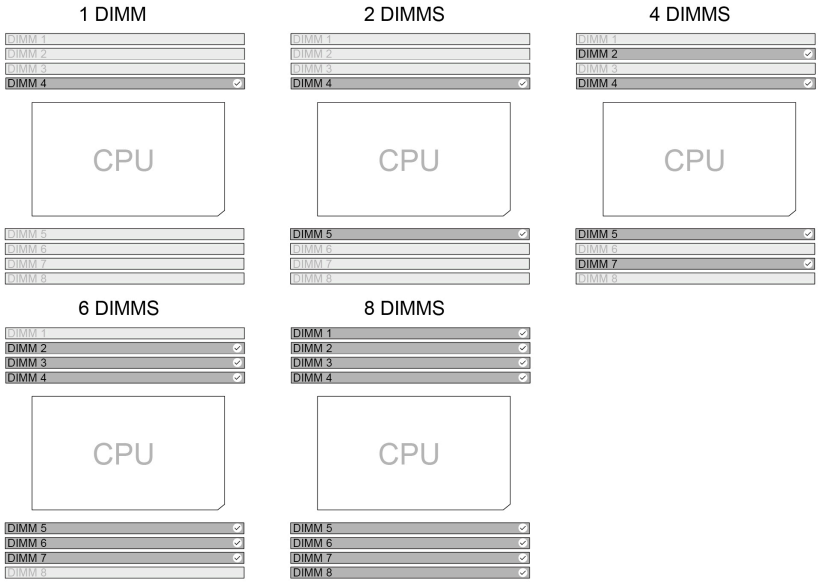

Front panel I/O assembly

Before you start, ensure that you have read “Prerequisites for hardware replacement” on page 63.

Removal steps

1. Remove the following parts if any:
   a. “Side cover” on page 68
   b. “Optional internal storage drive cage” on page 72
   c. “Front fan” on page 102
   d. “Upper PCIe fan” on page 103
2. Remove the front panel I/O assembly.

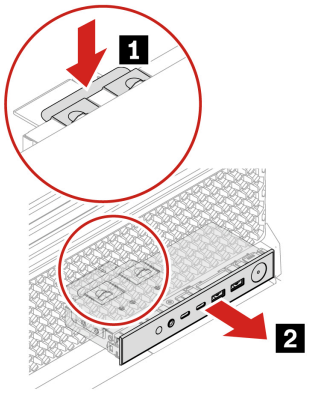

ThinkStation LED and holder

Before you start, ensure that you have read “Prerequisites for hardware replacement” on page 63.

Removal steps

1. Remove the following parts if any:
   a. “Side cover” on page 68
   b. “Optional internal storage drive cage” on page 72
   c. “Front fan” on page 102
   d. “Lower PCIe and internal storage drive fan” on page 104
2. Remove the ThinkStation LED.

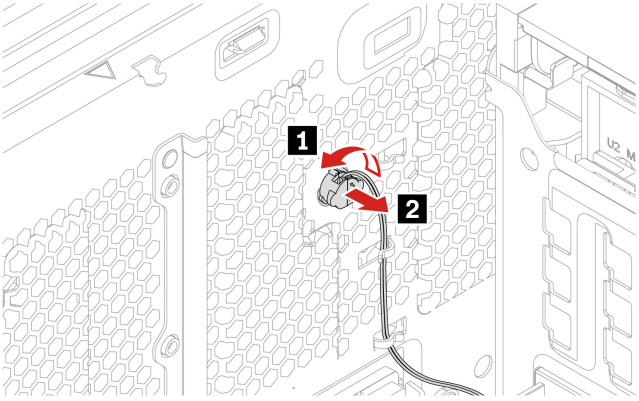

3. Remove the ThinkStation LED holder.

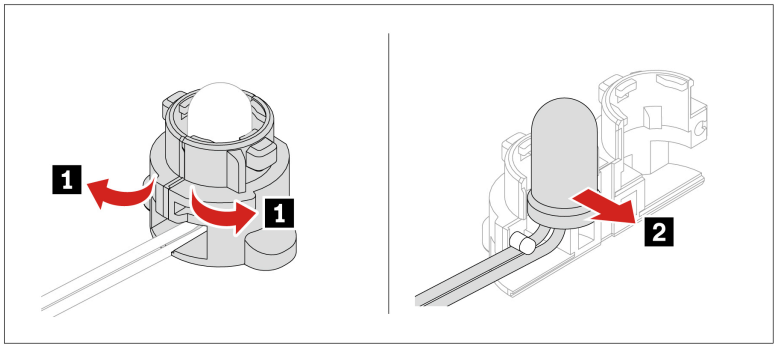

Internal speaker

Before you start, ensure that you have read “Prerequisites for hardware replacement” on page 63.

Removal steps

1. Remove the following parts if any:
   a. “Side cover” on page 68
   b. “Optional internal storage drive cage” on page 72
   c. “Front fan” on page 102
   d. “Rear fan” on page 102
   e. “Lower PCIe and internal storage drive fan” on page 104
2. Remove the internal speaker.

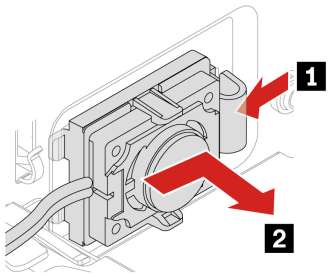

BMC card

Before you start, ensure that you have read “Prerequisites for hardware replacement” on page 63.

Removal steps

1. Remove the following parts if any:
   a. “Side cover” on page 68
   b. “Power supply assembly” on page 71
2. Vertically pull the BMC cable from the connector on the BMC card.
3. Open the handle and remove the BMC card vertically. The card might fit tightly into the slot. If necessary, alternately move each side of the card a small amount until the card is removed from the slot.

4. Vertically pull the BMC cable from the connector on the system board.

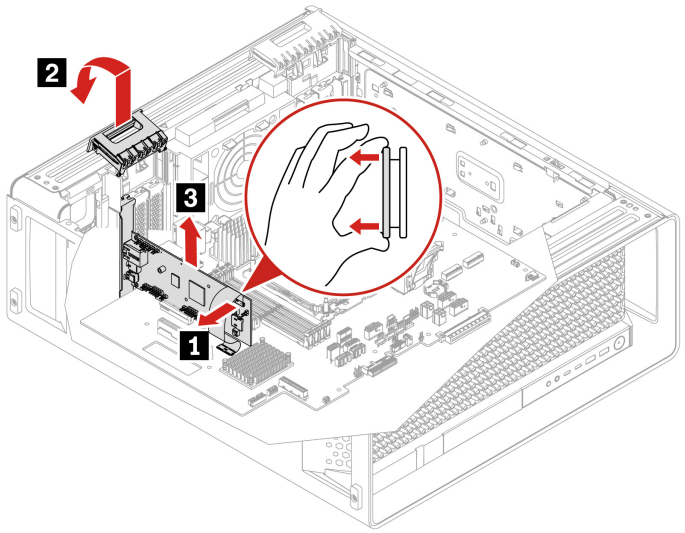

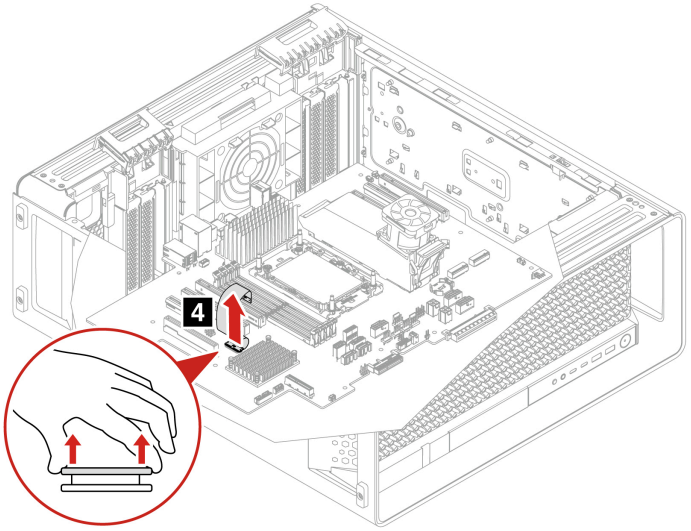

Installation steps

1. Connect the BMC cable, with the “BMC” end to the BMC card and the “Main” end to the system board.
2. Install the BMC card in PCIe slot 7 and close the handle.

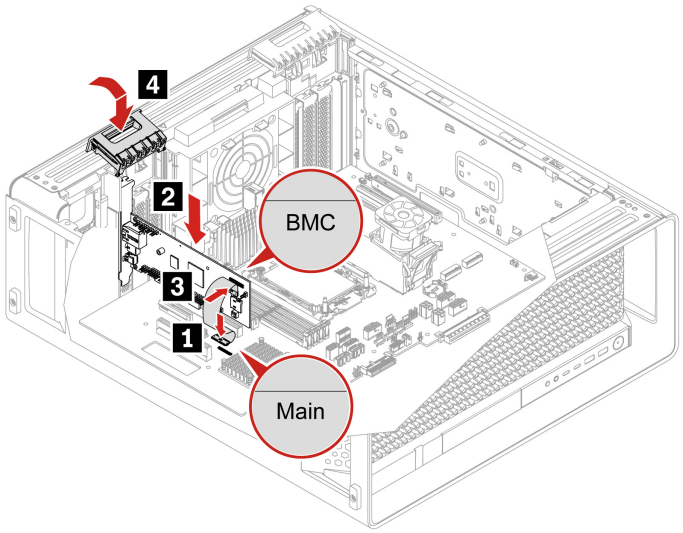

Slot 1 – Gen5 x16

Slot 2 – Gen5 x8

Slot 3 – Gen5 x16

Slot 4 – Gen5 x8

Slot 5 – Gen5 x16

Slot 6 – Gen5 x16

Slot 7 – Gen4 x8

Wi-Fi card and Wi-Fi card cover

Before you start, ensure that you have read “Prerequisites for hardware replacement” on page 63.

Removal steps

1. Remove the “Side cover” on page 68.
2. Remove the Wi-Fi card and Wi-Fi card cover.

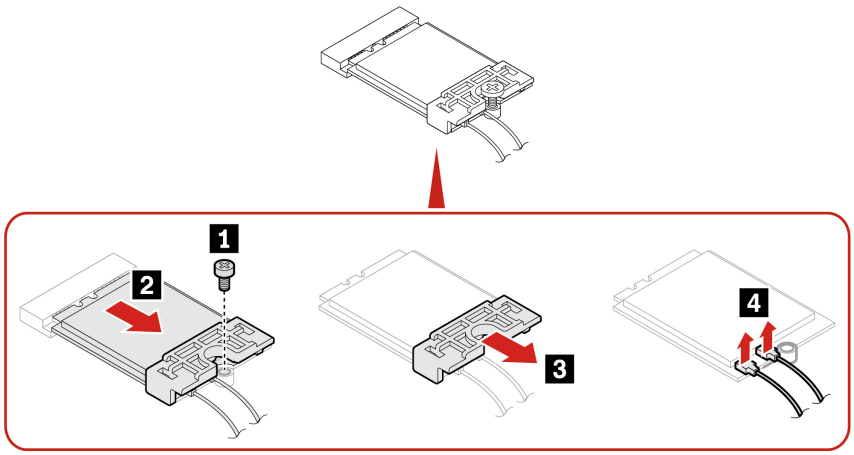

Screw specification	Quantity	Torque
M2 x 3 mm, Zn coated, black	1	1.5 ± 0.2 lb/in

Front and rear Wi-Fi antennas

Before you start, ensure that you have read “Prerequisites for hardware replacement” on page 63.

Removal steps

1. Remove the following parts if any:
   a. “Top cover” on page 65
   b. “Wi-Fi antenna cover” on page 67
   c. “Side cover” on page 68
   d. “Wi-Fi card and Wi-Fi card cover” on page 112
2. Remove cables from Wi-Fi card.

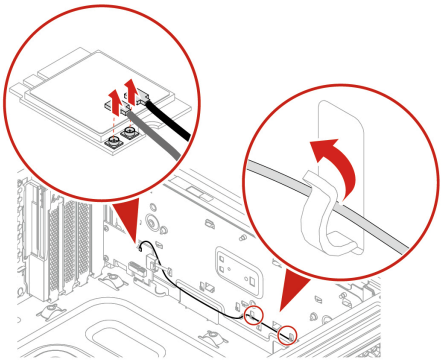

3. Remove the front and rear Wi-Fi antenna.

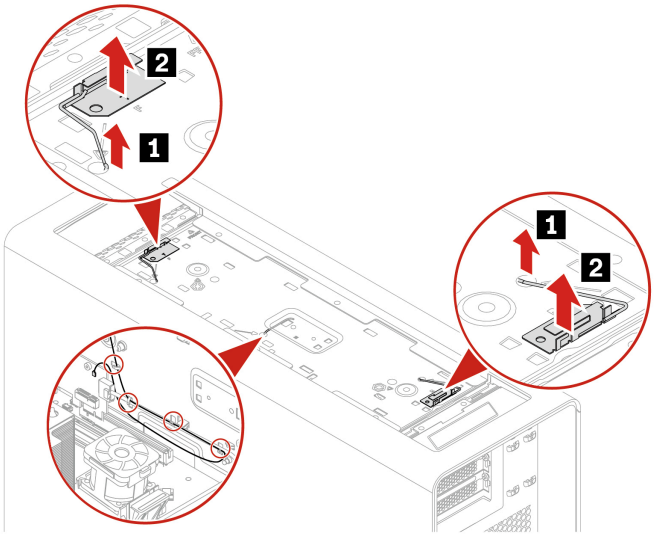

Intrusion switch

Before you start, ensure that you have read “Prerequisites for hardware replacement” on page 63.

Removal steps

1. Remove the “Side cover” on page 68.
2. Remove the intrusion switch.

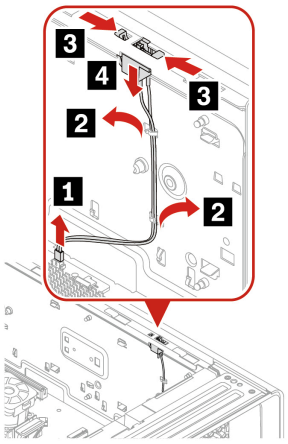

Thermal sensor

Before you start, ensure that you have read “Prerequisites for hardware replacement” on page 63.

Removal steps

1. Remove the following parts:
   a. “Side cover” on page 68
   b. “Front fan” on page 102
2. Remove the thermal sensor.

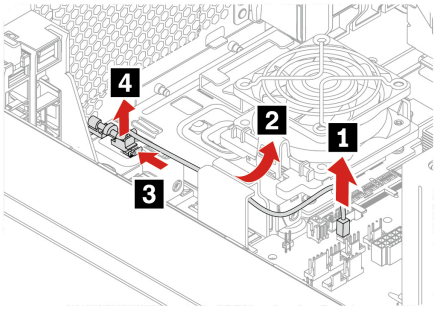

Serial connector cable

Before you start, ensure that you have read “Prerequisites for hardware replacement” on page 63.

Removal steps

1. Remove the following parts:
   a. “Side cover” on page 68
   b. “Rear fan” on page 102
2. Remove the serial connector cable.

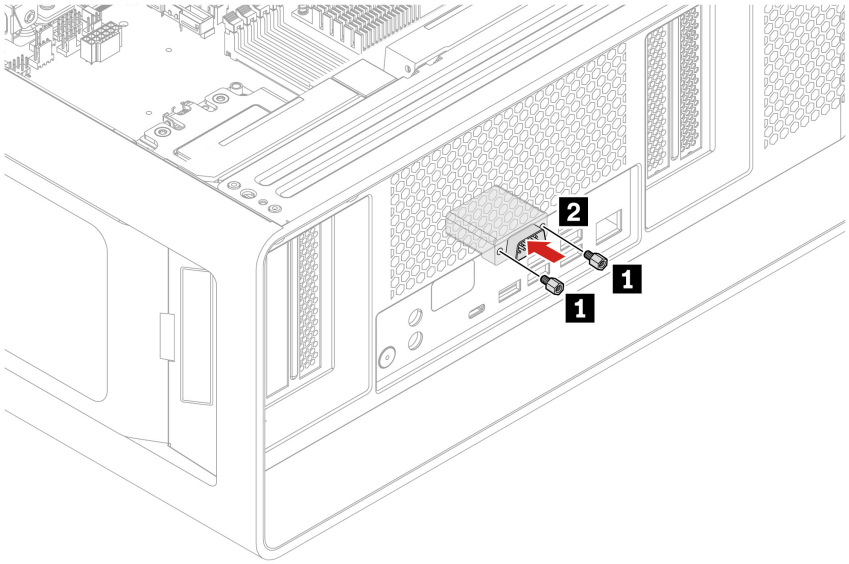

Screw specification	Quantity	Torque
#4–40 x 11.8 mm, Ni coated, clear	2	3.0 ± 0.5 lb/in

CPU heat sink

Before you start, ensure that you have read “Prerequisites for hardware replacement” on page 63.

Removal steps

1. Remove the following parts if any:
   a. “Side cover” on page 68
   b. “Optional internal storage drive cage” on page 72
2. Loosen the four captive screws that secure the CPU heat sink to the system board in diagonal sequence and unlock the anti-tilt wires in the same sequence to lift the CPU heat sink. For example,
   a. Partially loosen screw 4, then fully loosen screw 3, and then fully loosen screw 4.
   b. Partially loosen screw 2, then fully loosen screw 1, and then fully loosen screw 2.

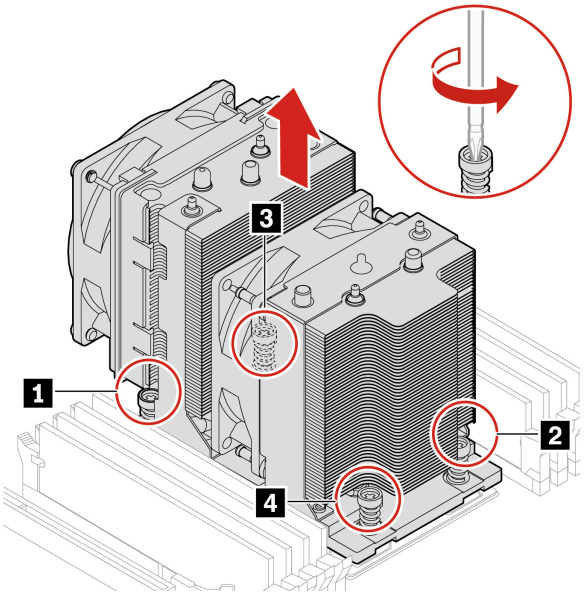

Screw specification	Quantity	Torque
M3.5 x 22.8 mm, Ni coated, clear (T20)	4	12 ± 1 lb/in

Notes:

- You need T20 screw bit longer than 6 inches to remove or install the CPU heat sink.
- The screws cannot be removed from the CPU heat sink.
- Place the CPU heat sink on its side. Ensure that the thermal grease on the bottom of it does not get in contact with anything.

Installation steps

Note: Before you attach the CPU heat sink to the computer, clean all thermal grease that has been used and then apply new thermal grease (TC-5622, 2.5 grams) on the area marked a as shown in the following illustration, if needed. Either too much or too little application of grease can cause a thermal problem due to imperfect contact with the component.

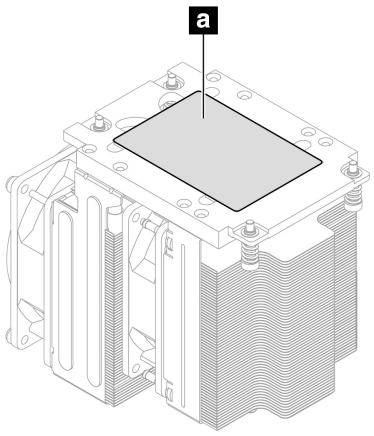

1. Align the four screws of the heat sink with the four screw holes on the CPU socket.

2. Press the heat sink to prevent it from being unbalanced. Tighten the four screws in diagonal sequence of 1, 2, 3, 4.

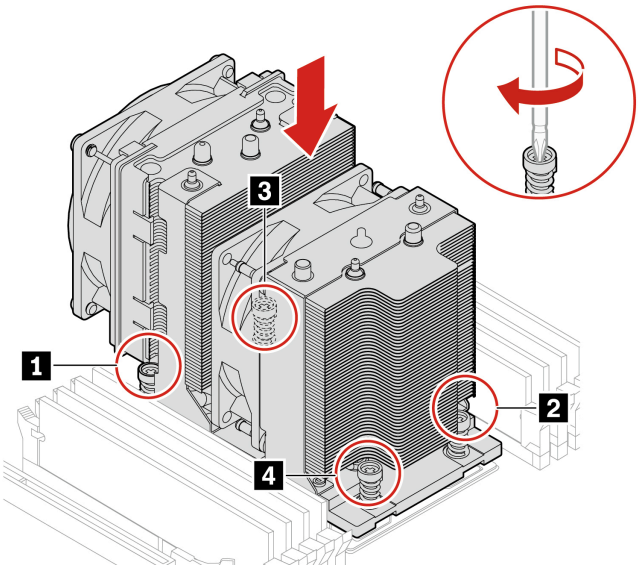

Screw specification	Quantity	Torque
M3.5 x 22.8 mm, Ni coated, clear (T20)	4	12 ± 1 lb/in

Note: You need T20 screw bit longer than 6 inches to remove or install the CPU heat sink.

CPU

Before you start, ensure that you have read “Prerequisites for hardware replacement” on page 63.

Removal steps

1. Remove the following parts if any:
   a. “Side cover” on page 68
   b. “Optional internal storage drive cage” on page 72
   c. “CPU heat sink” on page 115
2. Remove the CPU.

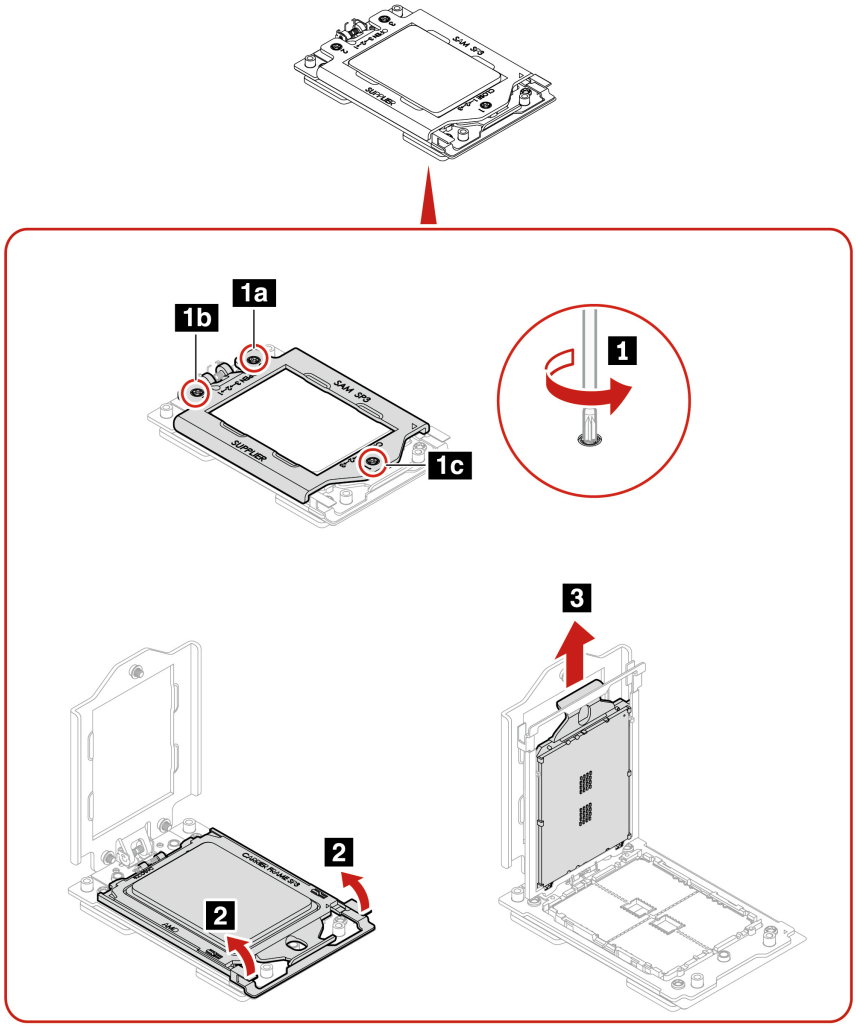

Notes:

- Your CPU and CPU socket might look slightly different from the illustrations in this topic.
- Touch only the edges of the CPU. Do not touch the gold contacts on the bottom.
- Do not drop anything onto the microprocessor socket while it is exposed. The socket pins must be kept as clean as possible.
- Use T20 screw bit with the torque to 12 lb/in.

Install steps

Install the CPU.

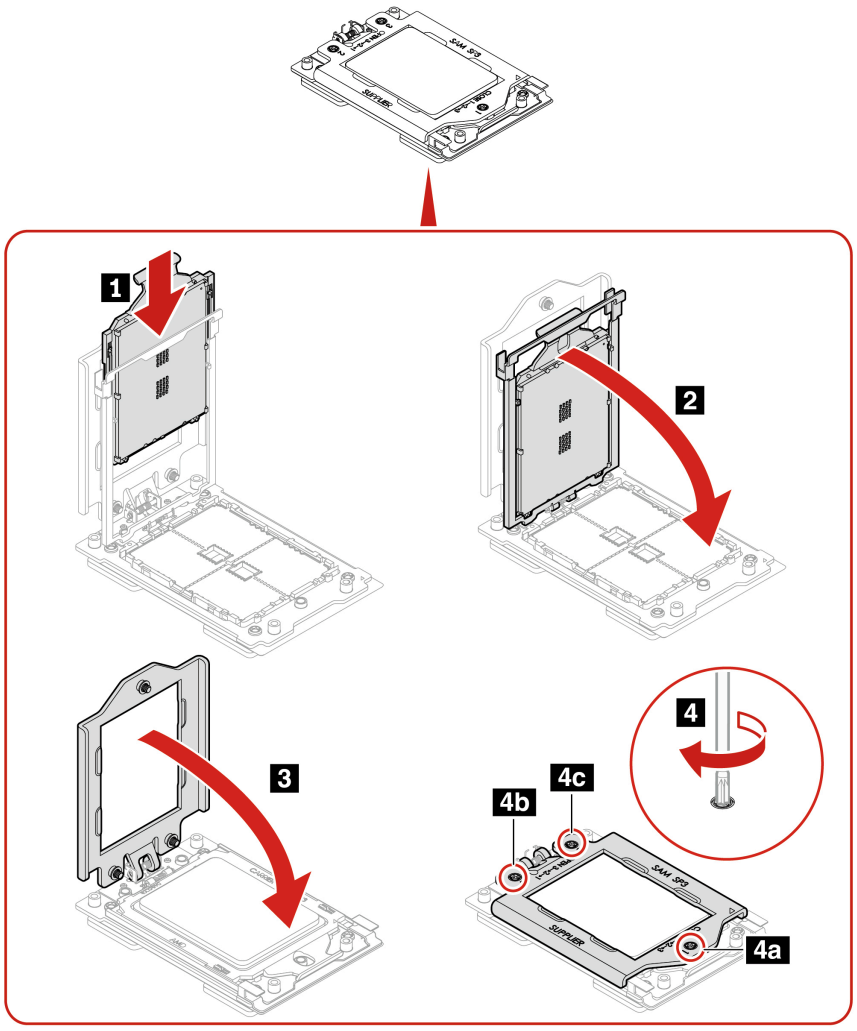

Notes:

- Ensure that you install the correct type of CPU option your computer supports.
- Touch only the edges of the CPU. Do not touch the pins on the microprocessor socket or the gold contacts on the bottom of the new microprocessor.

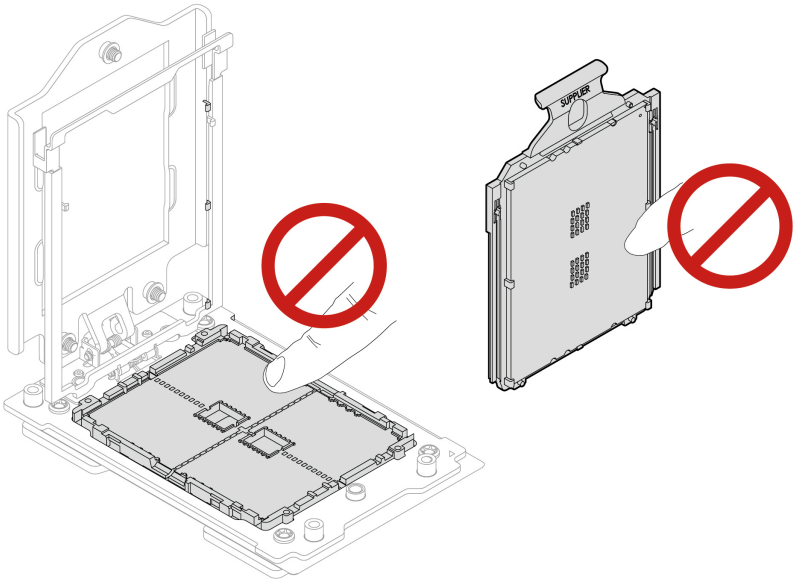

- Before you attach the CPU to the computer, clean all thermal grease that has been used and then apply new thermal grease (TC-5622, 2.5 grams) on the CPU heat sink marked a as shown in the following illustration, if needed. Either too much or too little application of grease can cause a thermal problem due to imperfect contact with the component.

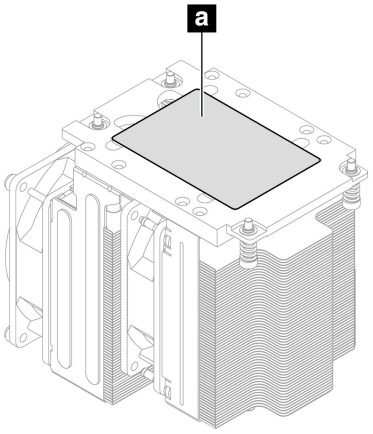

System board

Before you start, ensure that you have read “Prerequisites for hardware replacement” on page 63.

Removal steps

1. Remove the following parts if any:
   a. “Side cover” on page 68
   b. “Power supply assembly” on page 71
   c. “Optional internal storage drive cage” on page 72
   d. “Device in the front-access storage bay” on page 77
   e. “On-board M.2 SSD” on page 81
   f. “NVLINK bridge” on page 93

g. “Half-length PCIe card” on page 95
h. “Full-length PCIe card” on page 96
i. “Front fan” on page 102
j. “Upper PCIe fan” on page 103
k. “Front-access storage fan” on page 104
l. “Rear fan” on page 102
m. “Memory fan and air duct” on page 105
n. “Memory module” on page 107
o. “Front panel I/O assembly” on page 108
p. “Serial connector cable” on page 115
q. “CPU heat sink” on page 115
r. “CPU” on page 117

2. Remove the screws that secure the system board shown in the following illustration.

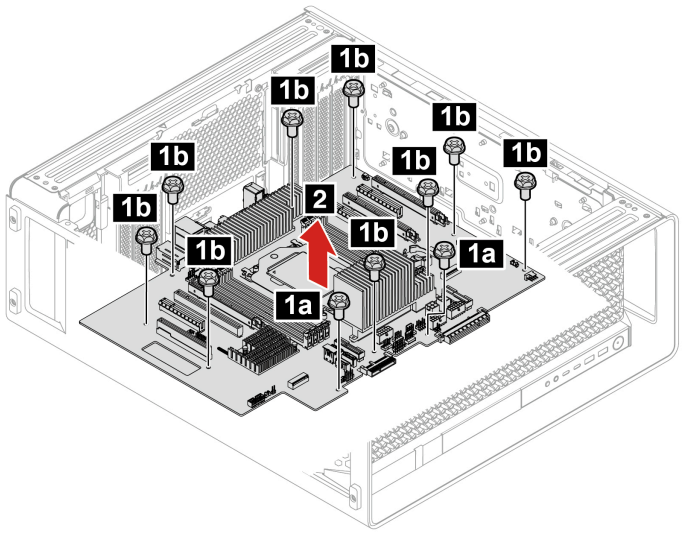

Screw specification	Quantity	Torque
M3 x 5 mm, Ni coated, black	11	5.0 ± 0.5 lb/in

Installation notice

- Clean all thermal grease that has been used and then apply new thermal grease if needed.
- Tighten the 1a screws first and then tighten the 1b screws.

Coin-cell battery

Before you start, ensure that you have read “Prerequisites for hardware replacement” on page 63.

About the coin-cell battery

The computer has a special type of memory that maintains the date, time, and settings for built-in features, such as parallel connector assignments (configurations). A coin-cell battery keeps this information active when you turn off the computer.

The coin-cell battery normally requires no charging or maintenance throughout its life; however, no coin-cell battery lasts forever. If the coin-cell battery fails, the date and time information is lost. An error message is displayed when you turn on the computer.

To dispose of the coin-cell battery, refer to the “Lithium coin-cell battery notice” in the *Safety and Warranty Guide*.

Replacement steps

1. Remove the following parts if any:
   a. “Side cover” on page 68
   b. “PCIe cards” on page 92
2. Locate the coin-cell battery based on the “System board illustration” on page 61.
3. Press and hold the retaining clip, then pivot the coin-cell battery out of the holder.

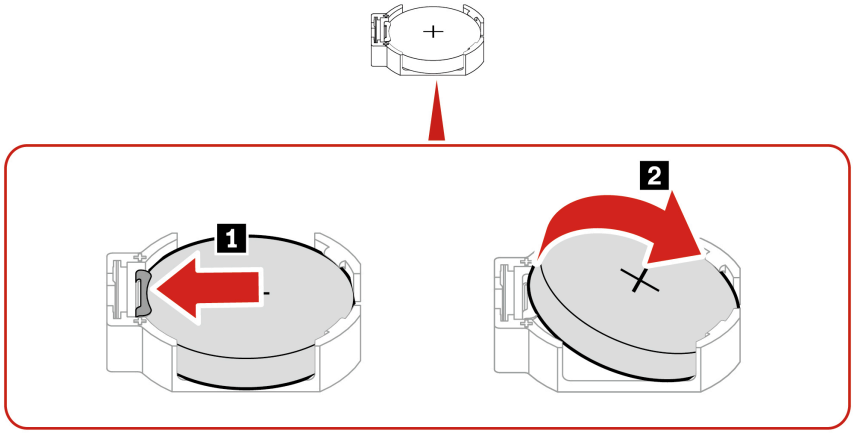

4. Tilt the coin-cell battery into the holder and press it down until it sits flat.

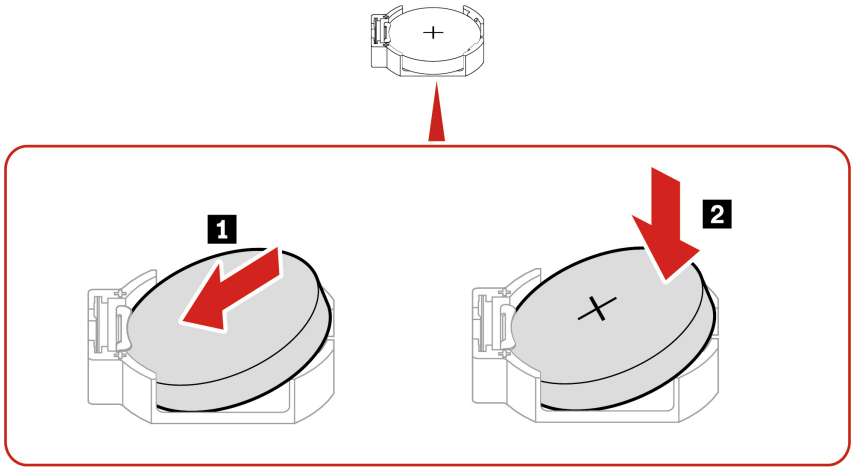

5. Install other removed parts and cables in reverse order.

After replacement

After installing a new coin-cell battery, reset the system date and time in the UEFI BIOS menu.

Rear power button

Before you start, ensure that you have read “Prerequisites for hardware replacement” on page 63.

Removal steps

1. Remove the following parts if any:
   a. “Side cover” on page 68
   b. “Power supply assembly” on page 71
   c. “Optional internal storage drive cage” on page 72
   d. “Device in the front-access storage bay” on page 77
   e. “On-board M.2 SSD” on page 81
   f. “NVLINK bridge” on page 93
   g. “Half-length PCIe card” on page 95
   h. “Full-length PCIe card” on page 96
   i. “Front fan” on page 102
   j. “Upper PCIe fan” on page 103
   k. “Front-access storage fan” on page 104
   l. “Rear fan” on page 102
   m. “Memory fan and air duct” on page 105
   n. “Memory module” on page 107
   o. “Front panel I/O assembly” on page 108
   p. “Serial connector cable” on page 115
   q. “CPU heat sink” on page 115
   r. “CPU” on page 117
   s. “System board” on page 120
2. Remove the rear power button.

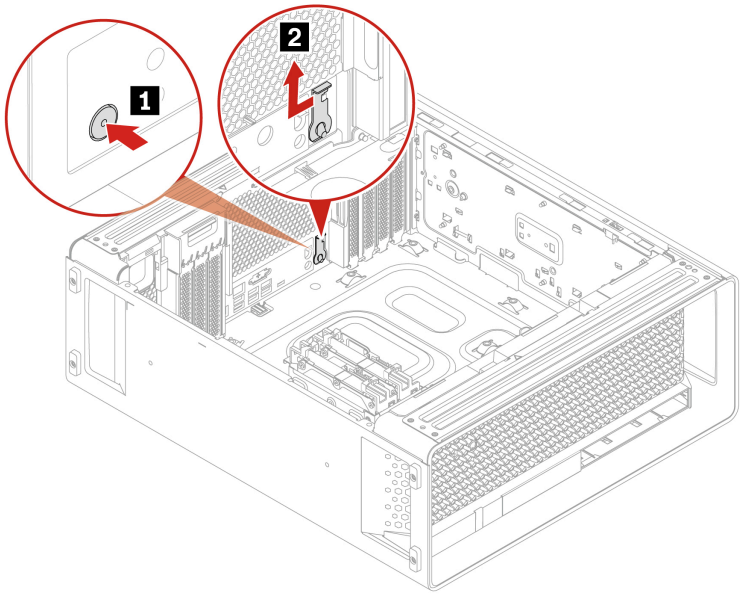
1
2

Appendix A. Important notice for Quebec consumers

In regard to section 79.18 of Quebec's Regulation respecting the application of the Consumer Protection Act, Lenovo in no way guarantees the availability of (a) replacement parts; (b) repair services; and (c) information necessary to maintain or repair the goods. For up-to-date information on the technical support and parts available for your purchase, please consult **https://support.lenovo.com/ca/en**.

En ce qui concerne l'article 79.18 du Règlement d'application de la Loi sur la protection du consommateur du Québec, Lenovo ne garantit en aucune façon la disponibilité des éléments suivants :(a) les pièces de rechange; (b) les services de réparation; et (c) les renseignements nécessaires à l'entretien à la réparation du bien. Pour obtenir des renseignements à jour sur le soutien technique et les pièces disponibles pour votre achat, veuillez consulter **https://support.lenovo.com/ca/fr**.

© Copyright Lenovo 2026

Appendix B. Notices and trademarks

Notices

Lenovo may not offer the products, services, or features discussed in this document in all countries. Consult your local Lenovo representative for information on the products and services currently available in your area. Any reference to a Lenovo product, program, or service is not intended to state or imply that only that Lenovo product, program, or service may be used. Any functionally equivalent product, program, or service that does not infringe any Lenovo intellectual property right may be used instead. However, it is the user's responsibility to evaluate and verify the operation of any other product, program, or service.

Lenovo may have patents or pending patent programs covering subject matter described in this document. The furnishing of this document does not give you any license to these patents. You can send license inquiries, in writing, to:

Lenovo (United States), Inc.
8001 Development Drive
Morrisville, NC 27560
U.S.A.
Attention: Lenovo Director of Licensing

LENOVO PROVIDES THIS PUBLICATION "AS IS" WITHOUT WARRANTY OF ANY KIND, EITHER EXPRESS OR IMPLIED, INCLUDING, BUT NOT LIMITED TO, THE IMPLIED WARRANTIES OF NON-INFRINGEMENT, MERCHANTABILITY OR FITNESS FOR A PARTICULAR PURPOSE. Some jurisdictions do not allow disclaimer of express or implied warranties in certain transactions, therefore, this statement may not apply to you.

Changes are made periodically to the information herein; these changes will be incorporated in new editions of the publication. To provide better service, Lenovo reserves the right to improve and/or modify the products and software programs described in the manuals included with your computer, and the content of the manual, at any time without additional notice.

The software interface and function and hardware configuration described in the manuals included with your computer might not match exactly the actual configuration of the computer that you purchase. For the configuration of the product, refer to the related contract (if any) or product packing list, or consult the distributor for the product sales. Lenovo may use or distribute any of the information you supply in any way it believes appropriate without incurring any obligation to you.

The products described in this document are not intended for use in implantation or other life support applications where malfunction may result in injury or death to persons. The information contained in this document does not affect or change Lenovo product specifications or warranties. Nothing in this document shall operate as an express or implied license or indemnity under the intellectual property rights of Lenovo or third parties. All information contained in this document was obtained in specific environments and is presented as an illustration. The result obtained in other operating environments may vary.

Lenovo may use or distribute any of the information you supply in any way it believes appropriate without incurring any obligation to you.

Any references in this publication to non-Lenovo Web sites are provided for convenience only and do not in any manner serve as an endorsement of those Web sites. The materials at those Web sites are not part of the materials for this Lenovo product, and use of those Web sites is at your own risk.

© Copyright Lenovo 2026

Any performance data contained herein was determined in a controlled environment. Therefore, the result obtained in other operating environments may vary significantly. Some measurements may have been made on development-level systems and there is no guarantee that these measurements will be the same on generally available systems. Furthermore, some measurements may have been estimated through extrapolation. Actual results may vary. Users of this document should verify the applicable data for their specific environment.

This document is copyrighted by Lenovo and is not covered by any open source license, including any Linux® agreement(s) which may accompany software included with this product. Lenovo may update this document at any time without notice.

For the latest information or any questions or comments, contact or visit the Lenovo Web site:

https://pcsupport.lenovo.com

Trademarks

Lenovo, Lenovo logo, ThinkStation, and ThinkStation logo are trademarks of Lenovo. Microsoft and Windows are trademarks of the Microsoft group of companies. Mini DisplayPort (mDP) and DisplayPort are trademarks of the Video Electronics Standards Association. The terms HDMI and HDMI High-Definition Multimedia Interface are trademarks or registered trademarks of HDMI Licensing LLC in the United States and other countries. Wi-Fi, Wi-Fi Alliance, and Miracast are registered trademarks of Wi-Fi Alliance. USB-C is a registered trademark of USB Implementers Forum. Linux is the registered trademark of Linus Torvalds in the U.S. and other countries. Wake On LAN is a trademark and brand of IBM (International Business Machines Corporation). All other trademarks are the property of their respective owners.


Lenovo