Eaton 9PX G2

Advanced User Guide
Eaton® 9PX PowerPass® Distribution Modules and Transformers

9PXTFMR5G2
9PXPPDM2G2
9PXTFMR11G2
9PXPPDM1G2

Copyright © 2025 EATON
All rights reserved.

English

Table of Content

1 Safety instructions....4
2 Special symbols....5
3 Introduction....6
3.1 Environmental protection....6
3.2 Benefits....7
3.3 Front panels....8
3.4 Rear panels....9
3.5 System Configuration Options....12
4 Mechanical Installation....12
4.1 Inspecting the equipment....12
4.2 Tower setups....13
4.3 Rackmount Setup....14
5 Electrical Installation....16
5.1 9PXPPDM2 Electrical Installation....16
5.2 9PXPPDM11G2 Electrical Installation....19
5.3 9PXPPDM1G2 and 9PXTFMR5G2 Electrical Installation....21
5.4 9PXPPDM1G2 and 9PXPPDM2G2 Voltage selection....23
5.5 9PXTFMR5G2 Voltage selection....24
5.6 9PXTFMR11G2 Voltage selection....25
6 Startup....27
6.1 Startup with the UPS....27
6.2 Plug-Receptacle Connections....28
6.3 System Configuration Connection....30
7 Maintenance Bypass....33
7.1 Using Maintenance Bypass....33
7.2 Return to Normal UPS Protection....34
8 Specifications....35
9 Service and Support....36

1 Safety instructions

SAVE THESE INSTRUCTIONS. This manual contains important instructions that you should follow during installation and maintenance of the Eaton 9PX G2 PowerPass Distribution Modules (PPDMs), 9PX G2 Transformers, and 9PX G2 UPS. Please read all instructions before operating the equipment and save this manual for future reference.

Class A EMC Statements

FCC Part 15

NOTE This equipment has been tested and found to comply with the limits for a Class A digital device, pursuant to part 15 of the FCC Rules. These limits are designed to provide reasonable protection against harmful interference when the equipment is operated in a commercial environment. This equipment generates, uses, and can radiate radio frequency energy and, if not installed and used in accordance with the instruction manual, may cause harmful interference to radio communications. Operation of this equipment in a residential area is likely to cause harmful interference in which case the user will be required to correct the interference at his own expense.

EN 62040-2

Some configurations are classified under EN 62040-2 as “Class-A UPS for Unrestricted Sales Distribution.” For these configurations, the following applies:

This is a Class A-UPS Product. In a domestic environment, this product may cause radio interference, in which case, the user may be required to take additional measures.

Requesting a Declaration of Conformity

Units that are labeled with a CE mark comply with the following harmonized standards and EU directives:

- Harmonized Standards: EN 62040-1 and EN 62040-2 (2006-6)
- EU Directives: 2006/95/EC, Council Directive on equipment designed for use within certain voltage limits 2004/108/EC, Council Directive relating to electromagnetic compatibility

The EC Declaration of Conformity is available upon request for products with a CE mark. For copies of the EC Declaration of Conformity, contact:

Eaton Power Quality SAS
110, Rue Blaise Pascal
38334 St ISMIER
FRANCE
Phone: +33 476 00 66 66

Safety Warnings

The UPS contains LETHAL VOLTAGES. All repairs and service should be performed by AUTHORIZED SERVICE PERSONNEL ONLY. There are NO USER SERVICEABLE PARTS inside the UPS.

To reduce the risk of fire or electric shock, install this UPS in a temperature and humidity controlled, indoor environment, free of conductive contaminants. Ambient temperature must not exceed 40°C (104°F). Do not operate near water or excessive humidity (95% maximum).

- For models with terminal-block wired outputs (9PXPPDM2G2 and 9PXTFMR11G2), overcurrent protection for the output AC circuit(s) is to be provided by others.
- For pluggable equipment (9PXPPDM1G2 and 9PXTFMR5G2), the socket-outlet shall be installed near the equipment and shall be easily accessible.
- Disconnection Device. For 9PXPPDM2G2, a disconnect switch shall be provided by others for AC input and output circuit.
- (Disconnection Device. For 9PXTFMR11G2, the disconnection device of the UPS used with this power distribution module also serves as the AC input disconnection device of this power distribution module. A disconnect switch shall be provided by others for AC output circuit.
- Do not overload the 9PX PPDM G2 or 9PX Transformer G2s. For 120V output voltage, the output of L1 or L2 can only be half-loaded.

2 Special symbols

The following are examples of symbols used on the UPS or accessories to alert you to important information:



DANGER: Dangerous voltage levels are present within the UPS. The UPS has its own internal power source (the battery). Consequently, the power outlets may be energized even if the UPS is disconnected from the AC power source.



Important instructions that must always be followed.
CAUTION: Batteries present a risk of energy or electrical shock or burn from high short circuit current. Observe proper precaution. Batteries may contain HIGH VOLTAGE and CORROSIVE, TOXIC and EXPLOSIVE substances.



Information, advice, help.



Read the documentation provided.



This equipment should only be used in a dry indoor environment.



Operating range of temperature.



Operating range of humidity.



The UPS and their batteries must be kept in a ventilated place.

3 Introduction

The Eaton® 9PX PowerPass Distribution Module G2 (9PX PPDM G2) and 9PX Transformer G2 models are designed to operate as accessories with Eaton 9PX G2 5000/6000/8000/11000 VA uninterruptible power systems (UPSs).

3.1 Environmental protection

Eaton has implemented an environmental-protection policy. Products are developed according to an eco-design approach.

Substances

This product contains no CFC, HCFC or asbestos. This product is compliant with regulations on the restriction of the use of substances in electrical and electronic equipment.

Packaging

To improve waste treatment and facilitate recycling, separate the various packing components.

- Packing materials are recyclable and bear the appropriate identification symbol. 

- The cardboard we use comprises over 50% of recycled cardboard.
- Plastic bags are made of polyethylene

Materials	**Abbreviations**	**Number in the symbols** 
Polyethylene terephthalate	PET	01
High-density polyethylene	HDPE	02
Polyvinyl chloride	PVC	03
Low-density polyethylene	LDPE	04
Polypropylene	PP	05
Polystyrene	PS	06

Follow all local regulations for the disposal of packing materials.

End of life

Eaton will process products at the end of their service life in compliance with local regulations. Eaton works with companies in charge of collecting and eliminating our products at the end of their service life.

Product

The product is made from materials that can be recycled. Dismantling and destruction must take place in compliance with all local regulations concerning waste. At the end of its service life, the product must be transported to a processing center for electrical and electronic waste. eaton.com/recycling

3.2 Benefits

The 9PX PPDM G2 and 9PX Transformer G2 basic features are:

- Provide surge protection if the UPS is not present
- Provide extra surge protection when the UPS is present
- Replace or upgrade the UPS without losing power to the protected equipment using the Maintenance Bypass feature (for 9PX PPDMs G2 only)
- Voltage selection for 208 Vac or 240 Vac input
- Choice of plug-receptacle or terminal-block wired models
- Variety of output outlets
- Breaker protection
- Bypass and voltage selection switches on selected models

There are four Eaton 9PX PPDM and 9PX Transformer models:

- 9PXTFMR5G2
- 9PXPPDM2G2
- 9PXTFMR11G2
- 9PXPPDM1G2

3.3 Front panels

Front Cover with Center Cover Attached (all models):

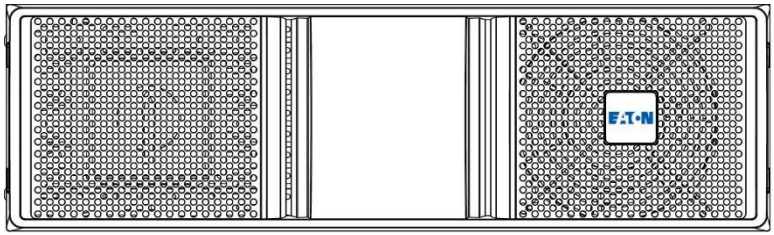

Front Cover with Center Cover Removed to Access Bypass Switch (9PX PPDMs G2 only):

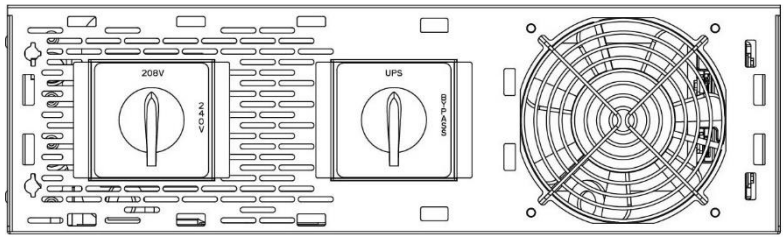

Front Cover with Center Cover Open to Access Voltage Selection Switch (all models except 9PXTFMR11G2, which uses terminal-block wiring for voltage selection):

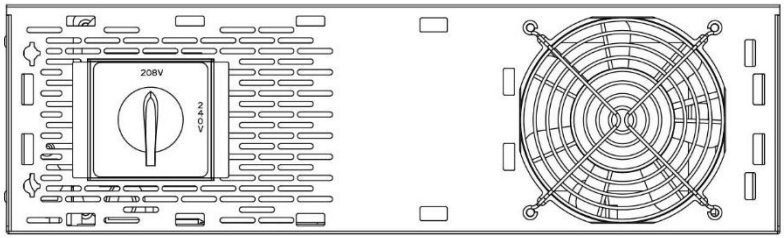

Front Cover with Center Cover Open of 9PXTFMR11G2, which uses terminal-block wiring for voltage selection:

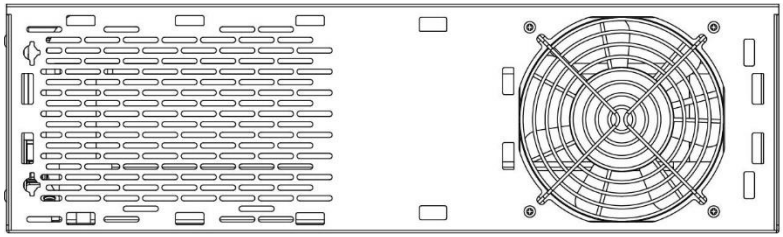

3.4 Rear panels

This section provides rear panel illustrations of the 9PX PPDM and 9PX Transformer models.

9PXTFMR5G2

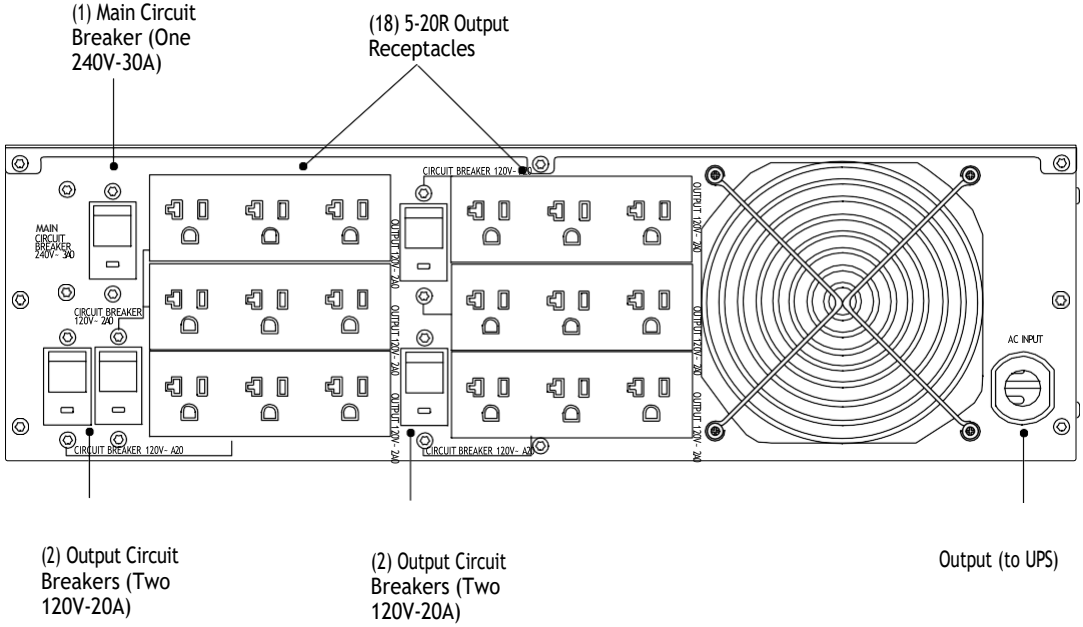

9PXPPDM2G2

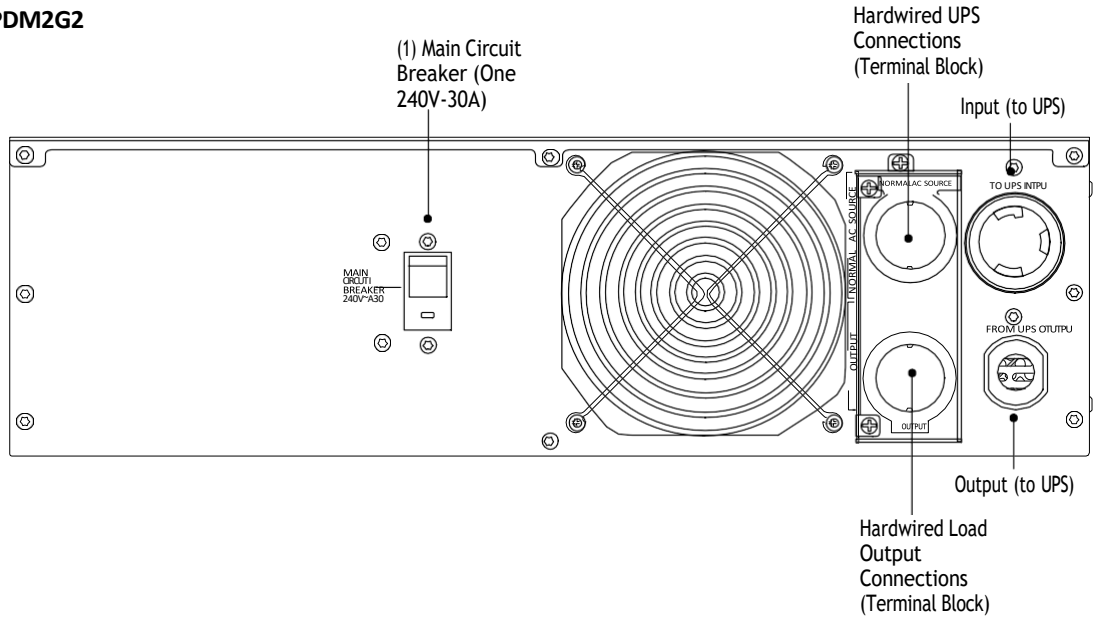

9PXTFMR11G2

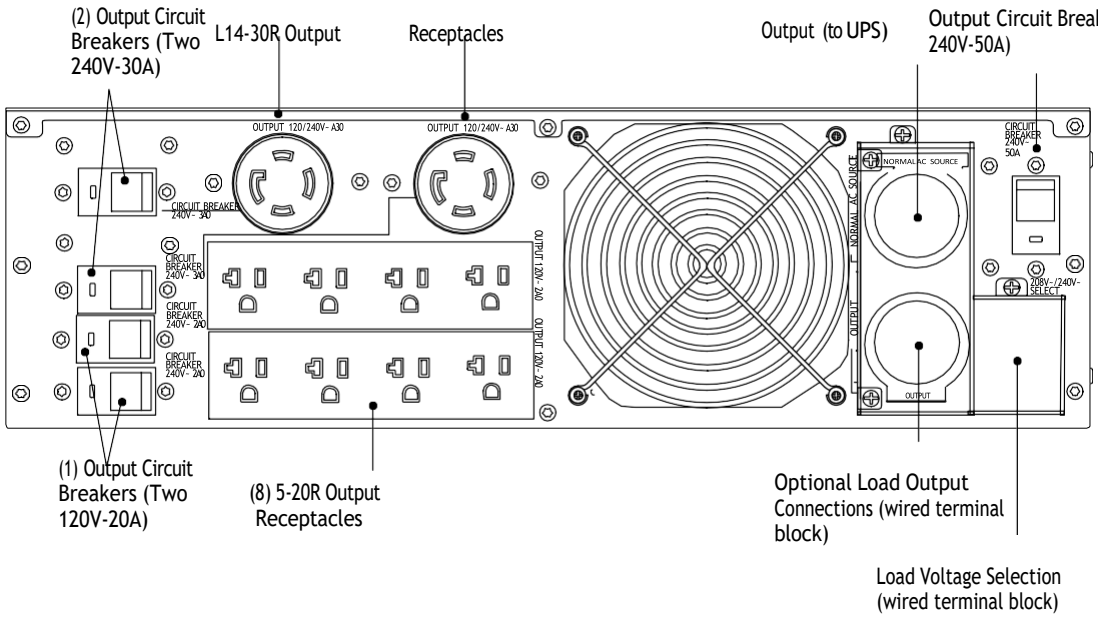

9PXPPDM1G2

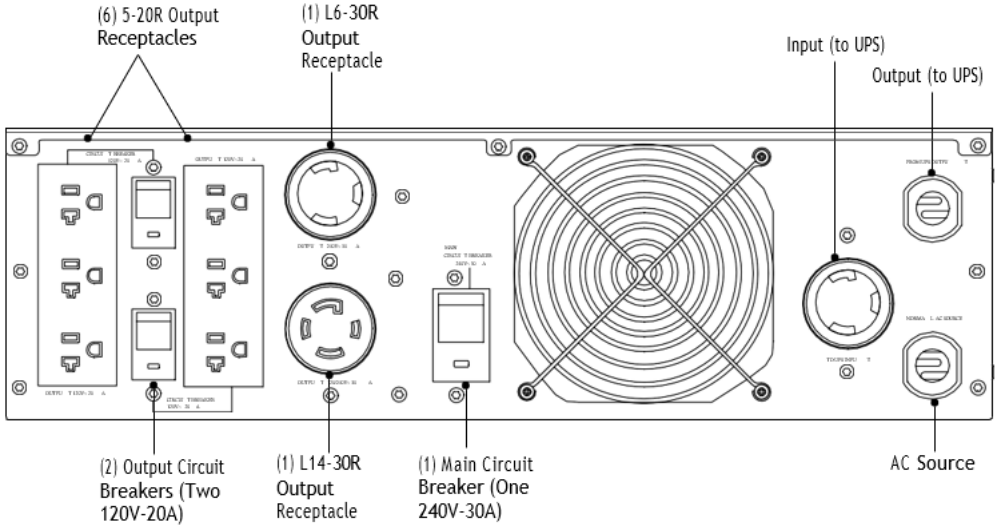
(6) 5-20R Output Receptacles
(1) L6-30R Output Receptacle
Input (to UPS)
Output (to UPS)
(2) Output Circuit Breakers (Two 120V-20A)
(1) L14-30R Output Receptacle
(1) Main Circuit Breaker (One 240V-30A)
AC Source

3.5 System Configuration Options

Several system configuration offerings combine the 9PX 5000/6000/8000/11000 VA G2 UPS models with other units in the 9PX G2 solution suite, including the 9PX PPDMs G2 and 9PX Transformers G2, the 9PX 240V Extended Battery Module (EBM G2), and the external Maintenance Bypass (MBP G2) accessories.

9PX PPDM G2 Models

The 9PX PPDM models are combined with 5000 VA and 6000 VA 9PX UPS in four system configurations:

- 9PXPPDM1G2 configured with a 5000 VA 9PX UPS G2
- 9PXPPDM1G2 configured with a 6000 VA 9PX UPS G2
- 9PXPPDM2G2 configured with a 5000 VA 9PX UPS G2
- 9PXPPDM2G2 configured with a 6000 VA 9PX UPS G2

9PX Transformer G2 Models

The 9PX Transformer models are combined with 9PX 5000/6000/8000/11000 VA UPS models (as well as EBMs and MBPs) in five system configurations:

- 9PXTFMR5G2 with a 5000 VA 9PX UPS G2
- 9PXTFMR5G2 with a 6000 VA 9PX UPS G2
- 9PXTFMR5G2 (as well as a 240V EBM G2and MBP G2) configured with an 8000 VA 9PX UPS G2
- 9PXTFMR5G2 (as well as a 240V EBM G2and MBP G2) configured with an 11000 VA 9PX UPS G2
- 9PXTFMR11G2 (as well as a 240V EBM G2) configured with an 11000 VA 9PX UPS G2

4 Mechanical Installation

4.1 Inspecting the equipment

If any equipment has been damaged during shipment, keep the shipping cartons and packing materials for the carrier or place of purchase and file a claim for shipping damage. If you discover damage after acceptance, file a claim for concealed damage.

To file a claim for shipping damage or concealed damage:

1. File with the carrier within 15 days of receipt of the equipment
2. Send a copy of the damage claim within 15 days to your service representative

Package content

Verify that the following additional items are included with the PPDM and Transformers:

Picture	Description
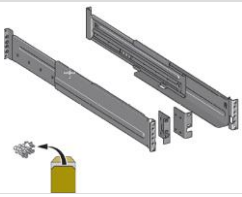	Rack kit and screws
	9PXPPDM2G2 and 9PXTFMR11G2 models only. (2) Cable glands used as strain relief for hardwired cables between the UPS and the 9PXPPDM2G2 or 9PXTFMR11G2, in the accessory bag
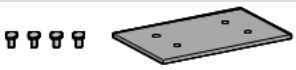	(1) Joining bracket and mounting screws for tower configuration, in the accessory box
	9PXTFMR11G2 models only. (1) Transformer cable used from UPS Output to Transformer Input, in the accessory bag
	(2) Mounting brackets and mounting screws for rackmount cabinet installation, in the accessory box

Mounting tools

Picture	Description
	• Phillips® cross-head screwdriver • Flat-head screwdriver

4.2 Tower setups

DO NOT install the 9PX PPDMs and 9PX Transformers in a hermetically-closed environment without any exchange of air.

The 9PX PPDMs and 9PX Transformers are heavy (see the Specifications chapter). A minimum of two people are required to lift the cabinets.

To reduce the risk of fire or electric shock, install this UPS in a temperature and humidity controlled, indoor environment, free of conductive contaminants. Ambient temperature must not exceed 40°C (104°F). Do not operate near water or excessive humidity (95% maximum).

To set up a tower configuration:

1. **Do this only if the UPS is already installed and operating**: Shut down the UPS before installing a 9PX PPDM or 9PX Transformer. Refer to shutdown instructions in the appropriate 9PX UPS user's guide for your system configuration.

Note: The order of a tower installation, from left to right, is the 9PX PPDM G2 or 9PX Transformer G2, 9PX EBM G2, and the 9PX UPS G2

2. Position the cabinet upright. Turn the Eaton logo to align with the top of the cabinet. Ensure additional cabinets are upright.

3. Group the cabinets in the correct order.

Note:

- Joining brackets are required to stabilize the upright cabinets in installations with two or more cabinets. A joining bracket is provided in the 9PX PPDM G2 or 9PX Transformer G2 accessory box in the shipping carton
- If you are adding a cabinet to an existing tower configuration, only add a single joining bracket between the 9PX PPDM G2 or 9PX Transformer G2 and the next cabinet in the configuration.

4. Locate the joining bracket in the rail kit box.

5. Align each joining bracket with the adjacent cabinet screw holes and secure with the supplied screws.

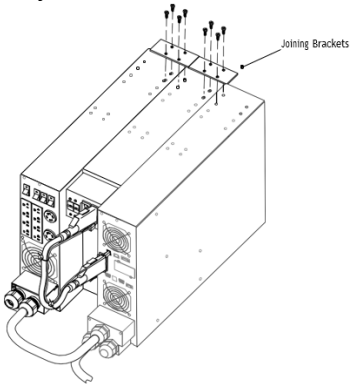

6. Continue to paragraph 5: “Electrical Installation”

4.3 Rackmount Setup

Note:

- The order of a rackmount installation, from top to bottom, is the 9PX UPS, 9PX EBM, and the 9PX PPDM or 9PX Transformer.
- First, install the rails in the rack. Then, install the cabinet on the rails.

Installing the Rails

To install the rails in the rack:

1. Locate the rails and the mounting hardware in the rail kit accessory box.
2. Locate the position where you will install the 9PX PPDM G2 or 9PX Transformer G2. (Install below the EBM if installed in this configuration, or below the UPS if the EBM is not installed in this configuration.)
3. Place the rails on the inside of the rack posts with the cabinet mounting flanges facing inside the rack. The L (Left) or R (Right) letter on the side of the rail should also face inside the rack
4. Slide the rail to fit between the vertical rack posts.
5. Secure each rail to the front and rear of the rack with two M6x12 mm screws

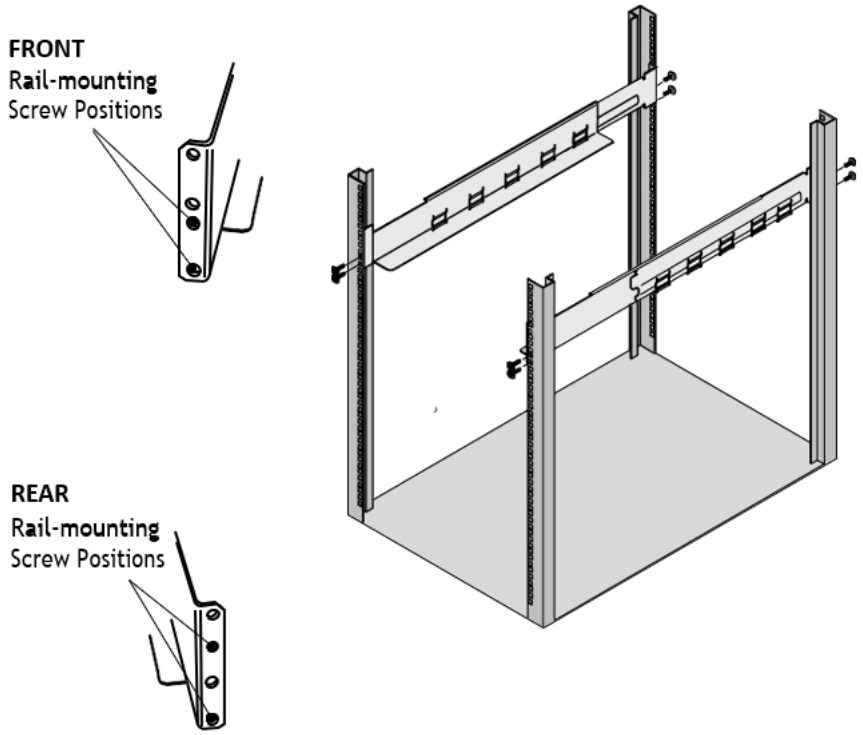

6. Continue to the next section, “Installing the Cabinet.”

Installing the Cabinet

To install the cabinet on the rails:

1. **Do this only if the UPS is already installed and operating**: Shut down the UPS before installing a 9PX PPDM G2 or 9PX Transformer G2. Refer to shutdown instructions in the appropriate 9PX UPS G2 user's guide for your system configuration.

2. Place the cabinet on a flat, stable surface with the front of the cabinet facing you.

3. Align the mounting brackets with the screw holes on the side of the cabinet. Install the mounting brackets.

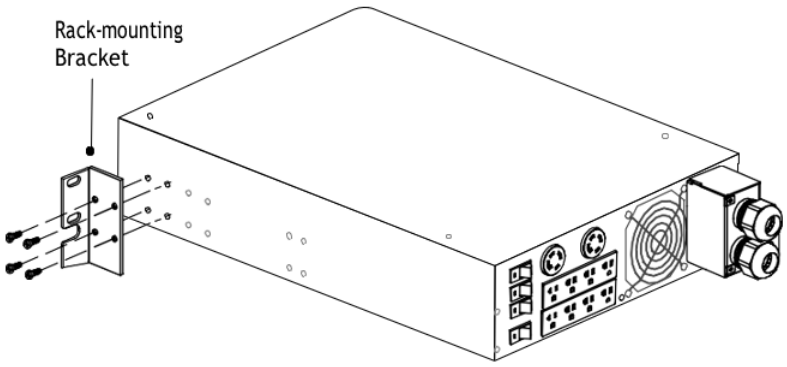

4. Set the rear of the cabinet on the cabinet mounting flanges and slide the cabinet into the rack.

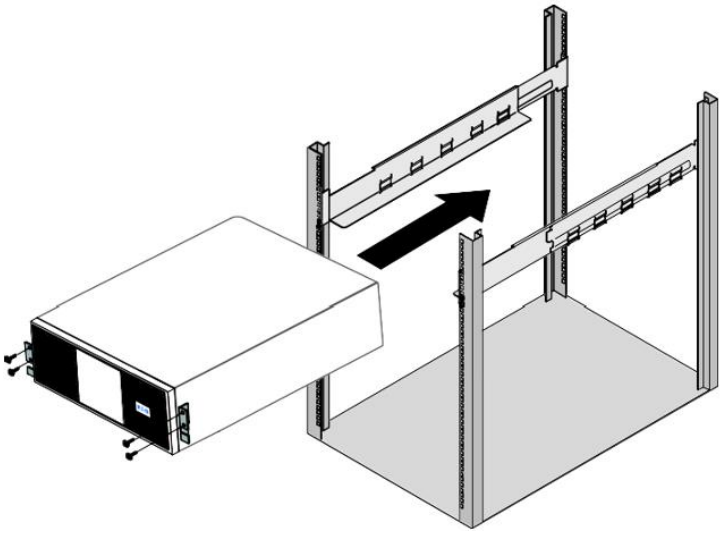

5. Secure the front of the cabinet to the rack with two M6x12 mm round-head screws. Note the position of the screws in the installation front view.

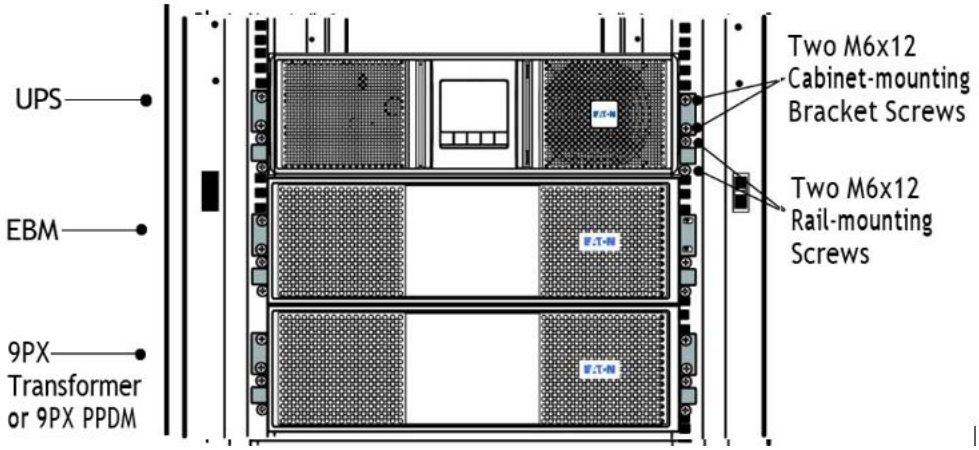

6. Continue to paragraph 5 “Electrical Installation”.

5 Electrical Installation

This chapter provides electrical installation instructions for the Eaton 9PX PowerPass Distribution Modules (PPDMs) and 9PX Transformers.

Risk of electrical shock. Only qualified service personnel (such as a licensed electrician) shall perform the electrical installation.



- To reduce the risk of fire, unit input connect only to a circuit provided with branch circuit overcurrent protection (30A for 9PXPPDM1G2, 9PXPPDM2G2, and 9PXTFMR5G2; 80A for 9PXTFMR11G2) in accordance with the National Electrical Code® (NEC®), ANSI/NFPA 70 or your local electrical code.
- For 9PXPPDM2G2 and 9PXTFMR11G2 only: For models with terminal-block wired outputs, overcurrent protection for the output AC circuit(s) is to be provided by others.
- For 9PXPPDM1G2 and 9PXTFMR5G2 only: For pluggable equipment:, the socket-outlet shall be installed near the equipment and shall be easily accessible.
- Disconnection Device. For 9PXPPDM2G2, a disconnect switch shall be provided by others for AC input and output circuit.
- Disconnection Device. For 9PXTFMR11G2, the disconnection device of the UPS used with this power distribution module also serves as the AC input disconnection device of this power distribution module. A disconnect switch shall be provided by others for AC output circuit

NOTE Do not make unauthorized changes to the 9PX UPS G2, 9PX PPDM, or 9PX Transformer models. Otherwise, damage may occur to your equipment and void your warranty.

Recommended input circuit breaker rating for 9PX PPDMs G2

9PX PPDM G2	**Input Circuit Breaker Rating**
9PXPPDM1G2	30A
9PXPPDM2G2	30A

5.1 9PXPPDM2 Electrical Installation

This section provides terminal block wiring requirements and electrical installation procedures for the 9PXPPDM2G2 model.

The 9PXPPDM2G2 model requires a dedicated branch circuit that meets the following requirements:

- 30A circuit with short circuit and overcurrent protection
- 208/240 Vac
- Single phase
- 50/60 Hz
- Breaker must be wall-mounted and readily accessible to the operator
- Flexible metal conduit (recommended for ease of service and maintenance)

9PXPPDM2G2 block diagram. The 9PXPPDM2G2 I/O terminal block is hardwired:

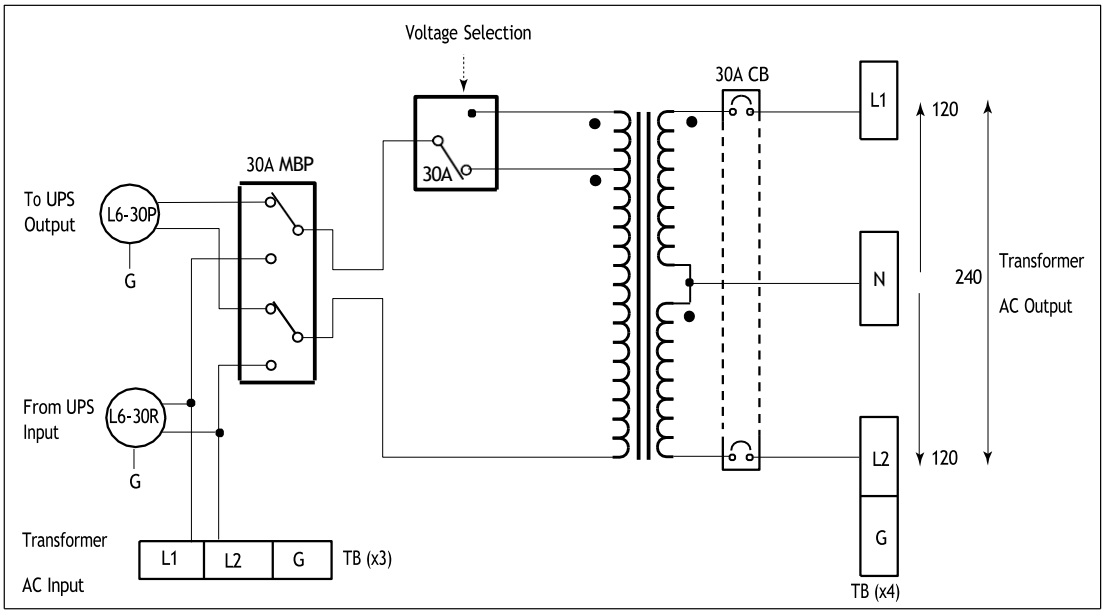

Procedure

To wire the I/O terminal block for the 9PXPPDM2G2:

1. Switch off utility power at the distribution point where the 9PXPPDM2G2 model will be connected. Be absolutely sure there is no power.

2. Verify that the output circuit breaker is in the OFF position (see paragraph “Rear Panels”).

3. On the front cover, unsnap and remove the square center cover.

4. Verify that the bypass switch is in the UPS (normal) position:

- If the bypass switch is set to UPS, replace the square center cover and go to Step 5.
- If the bypass switch is set on Bypass, turn the bypass switch to the UPS (normal) position. Replace the square center cover and go to Step 5.

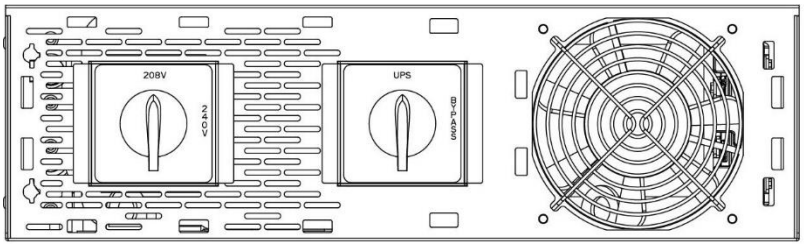

5. Use a Phillips-head screwdriver to remove the screw to detach the terminal block cover. Retain the cover and screw.

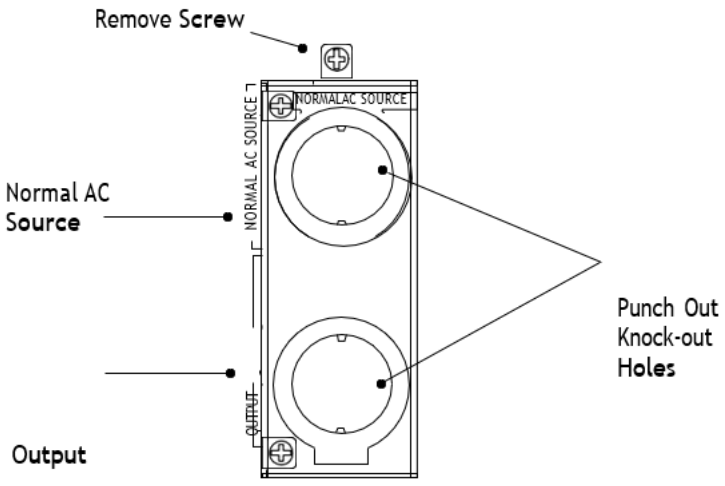

6. Punch out the pre-cut knock-out holes for the input and output conduit.

7. Pull the input and output wires through separate conduit, leaving approximately 0.5m (2 ft) of exposed wire. Attach a flexible metal fitting to the end of each conduit.

8. On the UPS, insert each conduit through a wiring access entry. Strip 9 mm (0.35”) of insulation from the end of each incoming wire.

9. On the 9PXPPDM2 terminal block, wire the UPS connections (terminals 1–3) and attach the cable gland to the panel (see picture and table below).

10. To wire the load connections (terminals 4–6), observe the following:

- Connect 4 and 6 (line to line) for 240V
- Connect 5 and 6 (line to neutral) for 120V
- Connect 4 and 5 (line to neutral) for 120V

11. Connect 7 (ground).

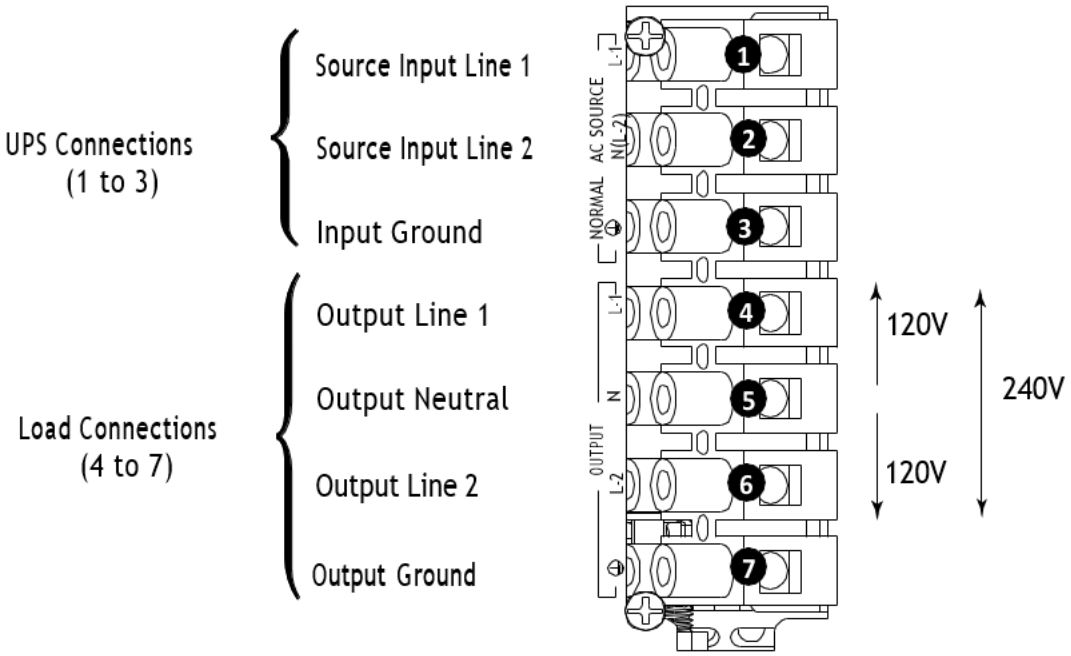

Recommended cable cross-sections for standard installation

Terminal Position	Wire Function 9PXTFMR11G2	Terminal Wire size rating*	Tightening torque
1	Source Input Line 1	10–16 mm^2 (8–6 AWG)	1.8 ±0.22 Nm (16 ±2 lb in)
2	Source Input Line 2		
3	Input Ground	6–16 mm^2 (10–6 AWG	
4	Output Line 1	10–16 mm^2 (8–6 AWG)	
5	Output Neutral		
6	Output Line 2		
7	Output Ground	6–16 mm^2 (10–6 AWG	

* Use 8 AWG for 9PXPPDM2G2 (75°C copper wire minimum).

12. Punch out the pre-cut knock-out holes for the input and output conduit.

13. Pull the input and output wires through separate conduit, leaving approximately 0.5m (2 ft) of exposed wire. Attach a flexible metal fitting to the end of each conduit.

14. On the UPS, insert each conduit through a wiring access entry. Strip 9 mm (0.35”) of insulation from the end of each incoming wire.

5.2 9PXPPDM11G2 Electrical Installation

This section provides terminal block wiring requirements and electrical installation procedures for the 9PXTFMR11G2 model.

The 9PXPPDM2G2 model requires a dedicated branch circuit that meets the following requirements:

- 80A circuit with short circuit and overcurrent protection
- 208/240 Vac
- Single phase
- 50/60 Hz
- Breaker must be wall-mounted and readily accessible to the operator
- Flexible metal conduit (recommended for ease of service and maintenance)

9PXPPDM2G2 block diagram. The 9PXPPDM2G2 I/O terminal block is hardwired. The voltage selection terminal block must be wired with flexible wiring:

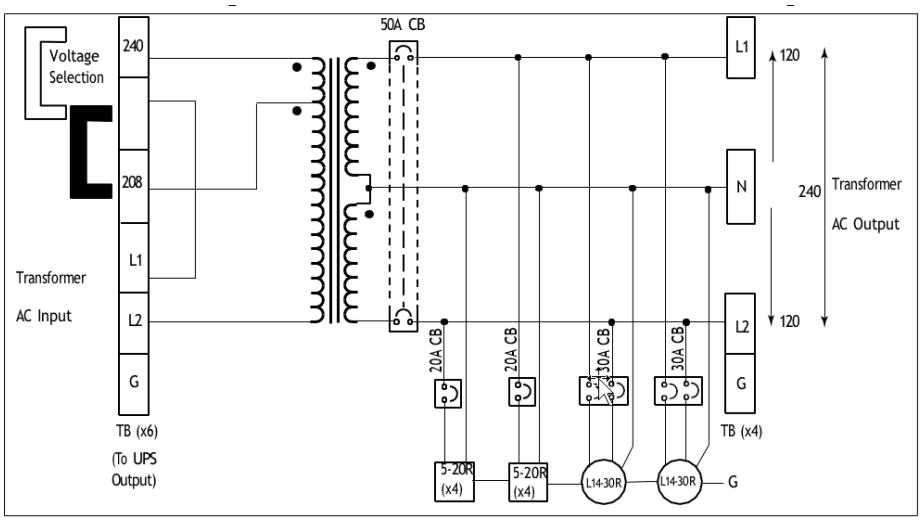

Procedure

To wire the I/O terminal block for the 9PXTFMR11G2:

1. Switch off utility power at the distribution point where the 9PXTFMR11G2 model will be connected. Be absolutely sure there is no power.

2. Verify that the output circuit breaker is in the OFF position (see chapter “Rear Panels”).

3. Use a Phillips-head screwdriver to remove the screw that secures the terminal block cover. Remove the cover. Retain the cover and screw.

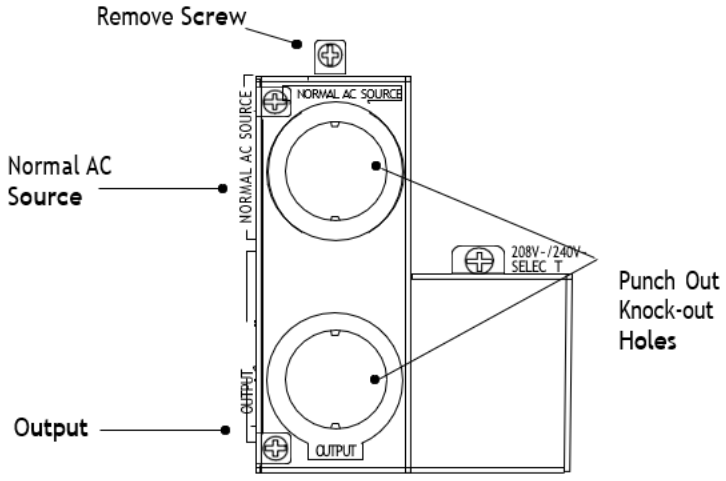

4. Punch out the pre-cut knock-out holes for the input and output conduit.

5. Pull the input and output wires through separate conduit, leaving approximately 0.5m (2 ft) of exposed wire. Attach a flexible metal fitting to the end of each conduit.

6. On the UPS, insert each conduit through a wiring access entry. Strip 9 mm (0.35”) of insulation from the end of each incoming wire.

7. On the 9PXTFMR11G2 terminal block, wire the UPS connections 1-3 and attach the cable gland to the panel

8. Punch out the pre-cut knock-out holes for the input and output conduit.

9. Pull the input and output wires through separate conduit, leaving approximately 0.5m (2 ft) of exposed wire. Attach a flexible metal fitting to the end of each conduit.

10. On the UPS, insert each conduit through a wiring access entry. Strip 9 mm (0.35”) of insulation from the end of each incoming wire.

11. Do you want to wire the connections for the load or use the receptacles?

- For receptacles, go to Step 13.
- For wired connections, go to Step 9.

12. To wire the load connections (terminals 4–6), observe the following:

- Connect 4 and 6 (line to line) for 240V
- Connect 5 and 6 (line to neutral) for 120V
- Connect 4 and 5 (line to neutral) for 120V

13. Connect 7 (output ground):

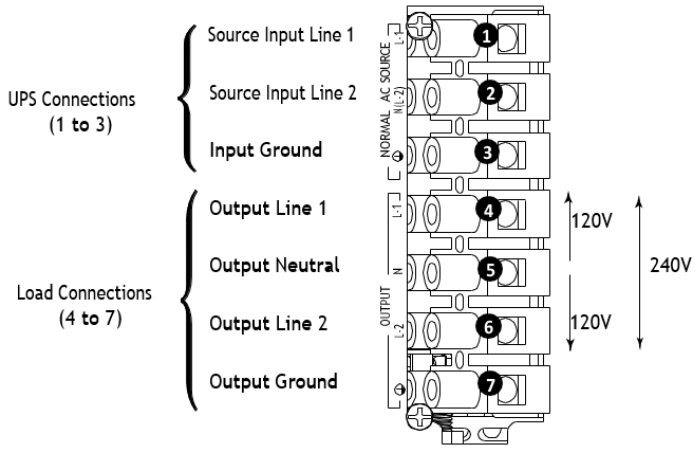

Recommended cable cross-sections for standard installation

Terminal Position	Wire Function 9PXTFMR11G2	Terminal Wire size rating*	Tightening torque
1	Source Input Line 1	6 AWG	1.8 ±0.22 Nm (16 ±2 lb in)
2	Source Input Line 2	6 AWG	
3	Input Ground	6 AWG	
4	Output Line 1	6 AWG	
5	Output Neutral	6 AWG	
6	Output Line 2	6 AWG	
7	Output Ground	6 AWG	

* Use 6 AWG for 9PXTFMR11G2 (90°C copper wire minimum).

14. Attach the cable gland to the panel.

15. Replace the terminal block cover and secure with screw.

16. Continue to “Voltage Selection” to set the voltage selection.

5.3 9PXPPDM1G2 and 9PXTFMR5G2 Electrical Installation

This section provides terminal block wiring requirements and electrical installation procedures for the 9PXPPDM1G2 and 9PXTFMR5G2 model.

The 9PXPPDM1G2 and 9PXTFMR5G2 models require a dedicated branch circuit that meets the following requirements:

- 30A circuit with short circuit and overcurrent protection
- 208/240 Vac
- Single phase
- 50/60 Hz
- Breaker must be wall-mounted and readily accessible to the operator
- Flexible metal conduit (recommended for ease of service and maintenance)

9PXPPDM1G2 block diagram:

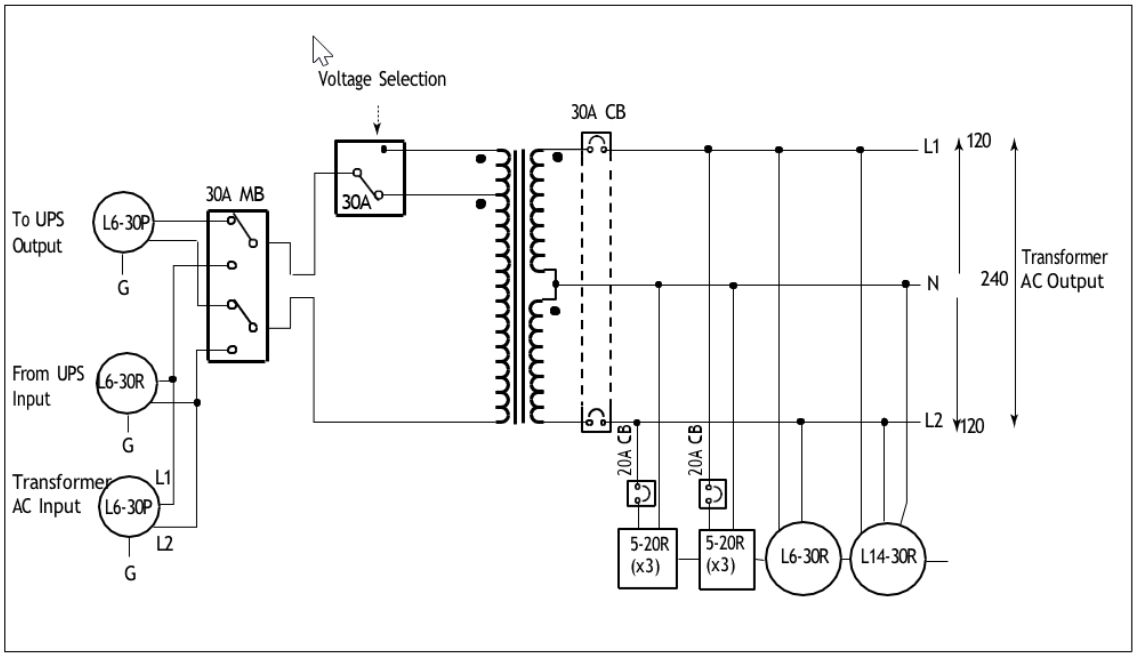

9PXTFMR5G2 block diagram:

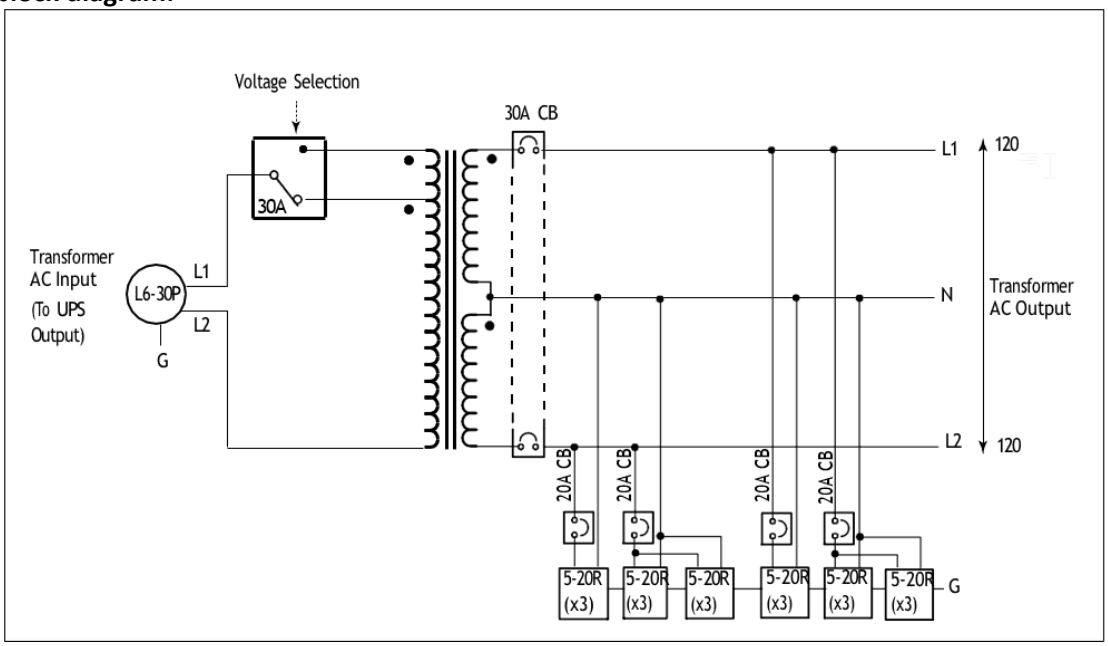

Procedure

For the 9PXPPDM1G2 and 9PXTFMR5G2 plug-receptacle models:

1. Verify that the output circuit breaker is in the OFF position (see chapter “Rear Panels”).
2. **9PXTFMR5G2 only**. Go to Step 5.
3. **9PXPPDM1G2 only**. On the front cover, unsnap and remove the square center cover.
4. Verify that the bypass switch is in the UPS (normal) position.

- If the bypass switch is set to UPS, replace the square center cover and go to Step 5.
- If the bypass switch is set on Bypass instead, turn the bypass switch to the UPS (normal) position (see picture below). Replace the square center cover and go to Step 5.

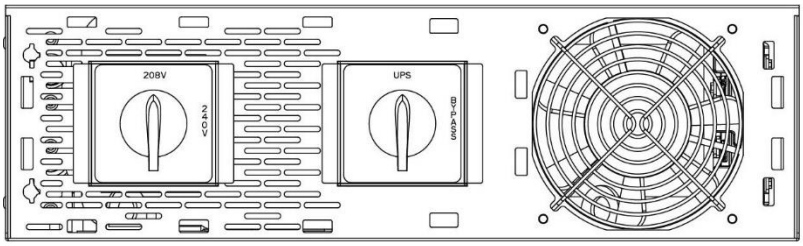

5. Continue to “Voltage Selection” to set the voltage selection.

5.4 9PXPPDM1G2 and 9PXPPDM2G2 Voltage selection

This section provides voltage settings and the voltage selection switching procedure for the 9PXPPDM1G2 and 9PXPPDM2G2 models.

9PXPPDM1G2 voltage settings

Input Voltage (from UPS)	9PXPPDM1G2 Output Voltage					
	208V Switch Position			Default 240V Switch Position		
	L6-30R	5-20R	L14-30R	L6-30R	5-20R	L14-30R
200	231	115	231/115	200	100	200/100
208	240	120	240/120	208	104	208/104
220	254	127	254/127	220	110	220/110
230	265	133	265/133	230	115	230/115
240	277	138	277/138	240	120	240/120

9PXPPDM2G2 voltage settings

Input Voltage (from UPS) Input Voltage	9PXPPDM2G2 Output Voltage			
	208V Switch Position		240V Switch Position	
	HV	LV	HV	LV
200	231	115	200	100
208	240	120	208	104
220	254	127	220	110
230	265	133	230	115
240	277	138	240	120

Procedure

To change the 9PXPPDM1G2 or 9PXPPDM2G2 voltage switch position:

1. On the 9PXPPDM1G2 or 9PXPPDM2G2 front cover, unsnap and remove the square center cover.
2. Remove and retain the two left-side Phillips-head screws that secure the front cover.
3. Open the front cover from the left side.

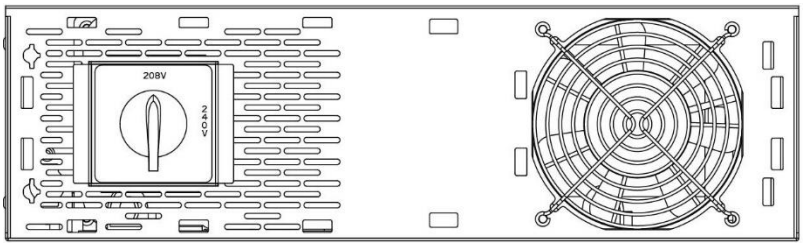

4. Turn the switch to the selected voltage.
5. Close the front cover and secure it with the two Phillips-head screws.
6. Replace the square center cover.
7. For startup with the UPS, go to Chapter 6 “Startup”.

5.5 9PXTFMR5G2 Voltage selection

This section provides voltage settings and the voltage selection switching procedure for the 9PXTFMR5G2 model.

9PXTFMR5G2 voltage settings

Input Voltage (from UPS)	9PXTFMR5G2 Output Voltage	
	208V Switch Position	240V Switch Position
	5-20R	5-20R
200	115	100
208	120	104
220	127	110
230	133	115
240	138	120
250	144	125

Procedure

To change the 9PXTFMR5G2 voltage switch position:

1. On the 9PXTFMR5G2 front cover, unsnap and remove the square center cover.
2. Remove and retain the two left-side Phillips-head screws that secure the front cover (see picture below).
3. Open the front cover from the left side.

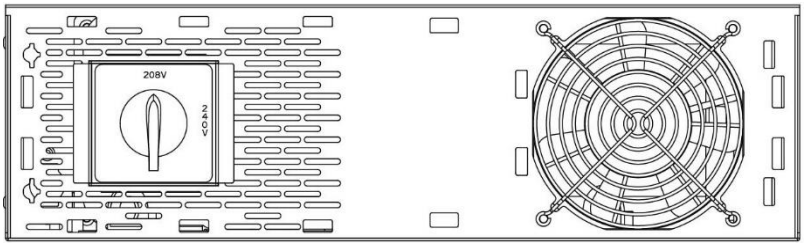

4. Turn the switch to the selected voltage.
5. Close the front cover and secure it with the two Phillips-head screws.
6. Replace the square center cover.
7. For startup with the UPS, go to Chapter 6 “Startup”.

5.6 9PXTFMR11G2 Voltage selection

This section provides voltage settings and the voltage selection terminal block wiring procedure for the 9PXTFMR11G2 model.

9PXTFMR11G2 I/O Voltage Settings for Voltage Selection Terminal Block

Input Voltage (from UPS)	9PXTFMR11G2 Output Voltage			
	208V Setting		240V Setting	
	HV	LV	HV	LV
200	231	115	200	100
208	240	120	208	104
220	254	127	220	110
230	265	133	230	115
240	277	138	240	120
250	288	144	250	125

9PXTFMR11G2 I/O Voltage Settings for Plug Receptacles

Input Voltage (from UPS)	9PXTFMR11G2 Output Voltage			
	208V Setting		240V Setting	
	5-20R	L14-30R	5-20R	L14-30R
200	116	231/115	100	200/100
208	121	240/120	104	208/104
220	128	254/127	110	220/110
230	134	265/133	115	230/115
240	139	277/138	120	240/120
250	144	288/144	125	250/125

Procedure

To change the 9PXTFMR11G2 voltage selection:

1. On the 9PXTFMR11G2 rear panel, remove and retain the Phillips-head screw and voltage selection terminal block cover.

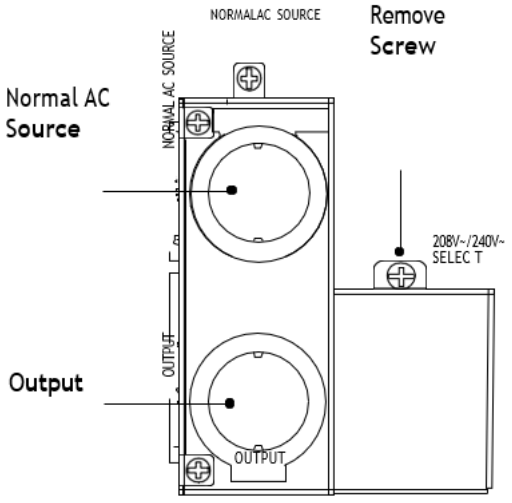

2. On the voltage selection terminal block, use 6 AWG wire to connect a jumper from the middle terminal to either the 208V (left) or 240V (right) terminal.

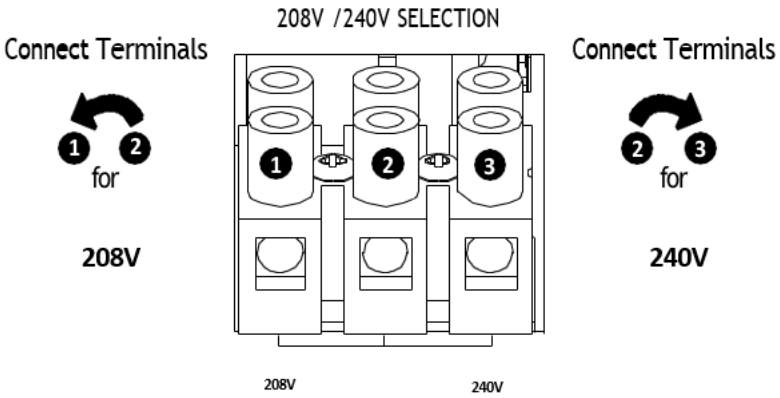

3. Replace the voltage selection terminal block cover and secure it with the Phillips-head screw.

4. For startup with the UPS, go to Chapter 6 “Startup”.

6 Startup

This chapter provides instructions for starting up Eaton 9PX PowerPass Distribution Modules G2 (PPDMs G2) or 9PX Transformers G2 with a 9PX 5000/6000/8000/11000 VA UPS G2. System configuration connection diagrams are also provided.

6.1 Startup with the UPS

To start up a 9PX PPDM G2 or 9PX Transformer G2 with the UPS.

Note:



- If you are installing a remote power-off (RPO) switch, install the switch before powering on the UPS. Refer to “RPO Installation” in the 9PX UPS user's guide for instructions.
- Refer to the 9PX UPS user's guide for recommended upstream protection. For European models, also refer to the recommendations for downstream protection.
- Before startup, refer to the 9PX G2 UPS/EBM/MBP user's guides for additional configuration information.
- To change the UPS default settings, refer to “Display Functions” in the UPS user's guide. Refer to the UPS user's guide for UPS operation

1. Ensure that the upstream circuit breaker is OFF.
2. Plug the input and output cords of the 9PX PPDM G2 or 9PX Transformer G2model into the input and output connectors on the UPS (see “System Configuration Connections” for connection illustrations).
3. Verify that the UPS internal battery connector is connected (refer to the UPS/EBM user's guide)
4. **For 8k or 11k EBM only**. Switch all battery circuit breakers to the ON position (refer to the UPS/EBM user's guide).
5. Ensure that the main circuit breaker on the 9PX PPDM G2 or 9PX Transformer G2is ON.

   The equipment is powered by utility power, but not protected by the UPS

Note: For **9PX PPDMs G2** only. If the bypass switch is set to Bypass, the load is powered by AC source, but still is not protected by the UPS.



The 9PX PPDM output circuit breaker (disconnect switch) disconnects power to the output on the 9PX PPDM rear panel, but does NOT shut off power to the UPS (opening the upstream protection would be required).

   Batteries are recharging. An eight-hour recharge period is necessary to get full backup time

6. Press and hold the ⏻ button until you hear the UPS beep (approximately three seconds).

   After the UPS is turned on, it conducts a self-test and enters Normal mode. The ~ indicator remains on, indicating that power is available to your equipment.

7. Confirm the UPS output voltage through the front panel and verify that it matches the 9PX PPDM G2 or 9PX Transformer G2 output voltage.

   For example, if the input to the UPS is 208V, then voltage selection should be 208V. (For voltage settings and voltage selection procedures for all models, see “Voltage Selection”)



Failure to match the UPS output voltage may result in a hazardous condition, including damage to the UPS or to the load

8. Does you model use hardwired or plug-receptacle load output connections for the equipment to be protected?

   For models that use hardwired load output connections, this procedure is completed.

   For models that use plug-receptacle load output connections, go the “Plug-Receptacle Connections.”

6.2 Plug-Receptacle Connections

- DO NOT protect laser printers with the UPS because of the exceptionally high power requirements of the heating elements.
- Do not overload the 9PX PPDM G2 or 9PX Transformers G2. For 120V output voltage, the output of L1 or L2 can only be half-loaded

9PXTFMR5G2, 9PXTFMR11G2 (plug-receptacle/terminal-block wired option), and 9PXPPDM1G2 models only. Plug the L1 or L2 connections for the equipment to be protected into the appropriate L1 or L2 receptacle group as illustrated in figures below:

Observe the appropriate load output limits when connecting for your model

9PXTFMR5G2 L1 Load Output Limits

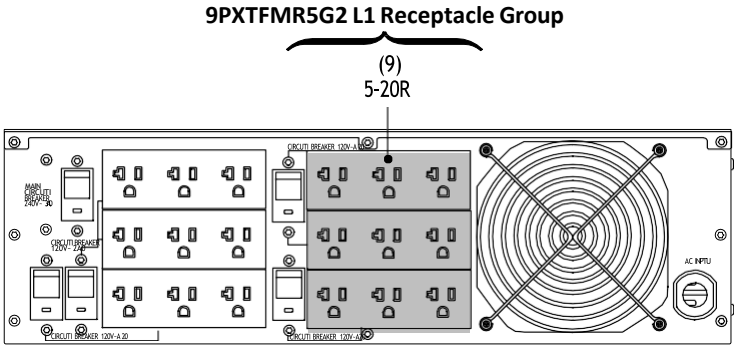

208V: When the input voltage is 208V, the total output current maximum for the L1 receptacle group is 22.1A.

240V: When the input voltage is 240V, the total output current maximum for the L1 receptacle group is 22.5A.

9PXTFMR5G2 L2 Load Output Limits

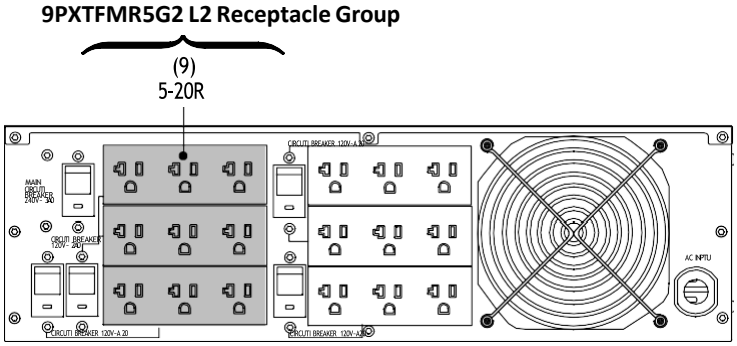

208V: When the input voltage is 208V, the total output current maximum for the L2 receptacle group is 22.1A.

240V: When the input voltage is 240V, the total output current maximum for the L2 receptacle group is 22.5A.

9PXTFMR11G2 L1/L-1 Load Output Limits

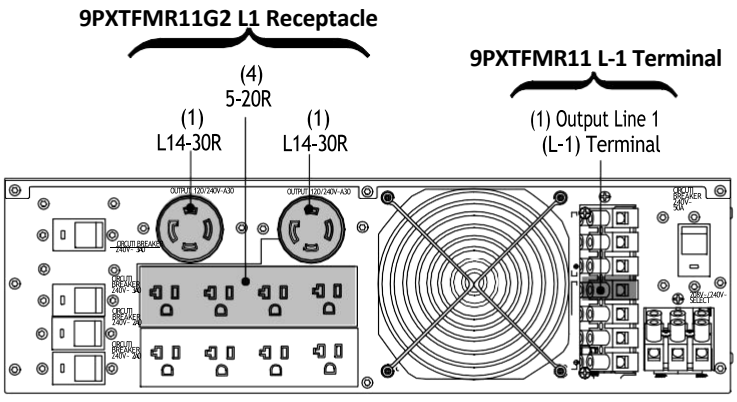

208V: When the input voltage is 208V, the total output current maximum is 41.7A for either the L1 receptacle group or the L-1 terminal.

9PXTFMR11G2 L2/L-2 Output Limits

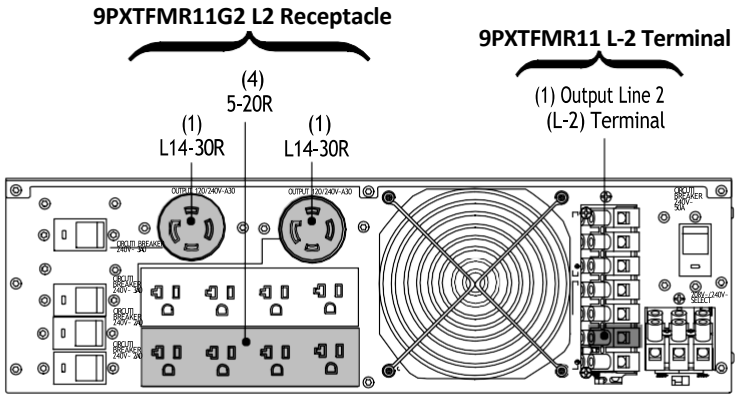

208V: When the input voltage is 208V, the total output current maximum is 41.7A for either the L2 receptacle group or the L-2 terminal.

240V: When the input voltage is 240V, the total output current maximum is 45.8A for either the L2 receptacle group or the L-2 terminal.

9PXPPDM1G2 L1 Load Output Limits

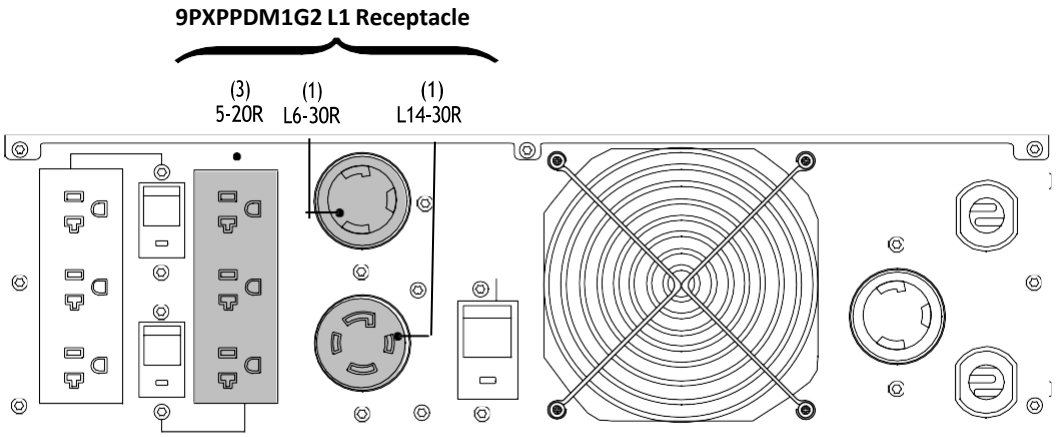

208V: When the input voltage is 208V, the total output current maximum for the L1 receptacle group is 22.1A.
240V: When the input voltage is 240V, the total output current maximum for the L1 receptacle group is 22.5A.

9PXPPDM1G2 L2 Load Output Limits

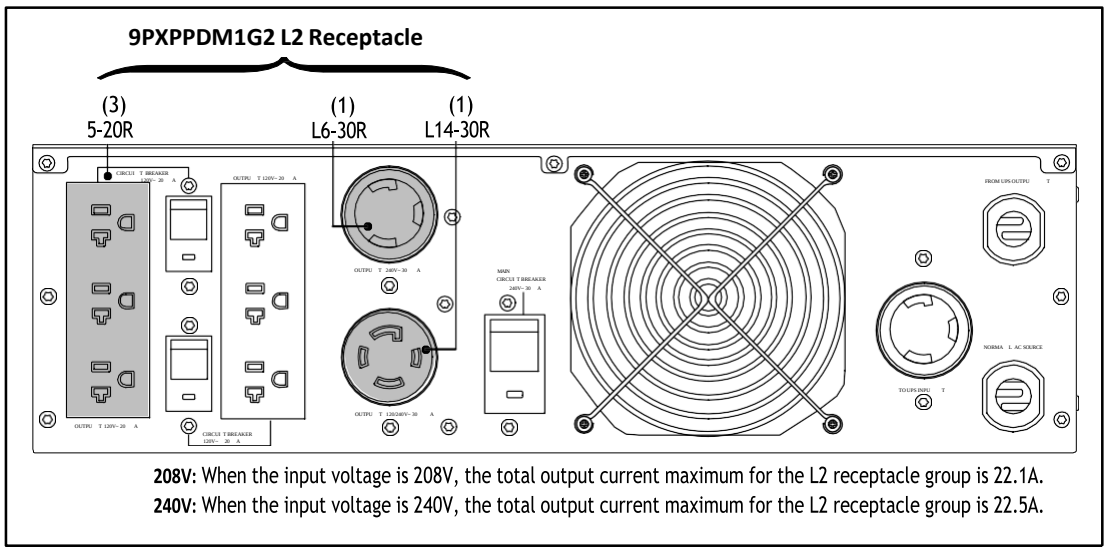

208V: When the input voltage is 208V, the total output current maximum for the L2 receptacle group is 22.1A.
240V: When the input voltage is 240V, the total output current maximum for the L2 receptacle group is 22.5A.

6.3 System Configuration Connection

This section provides illustrations of 9PX PPDM and 9PX Transformer system configuration connections

Note:

- The installation diagrams in this section depict rack configurations. Although the orientation is different, the system connections are the same for tower configurations.
- Refer to the UPS user's guide for additional installation and system configuration information.
- For 9PX Transformer configurations, the AC input from the 9PX Transformer connects to the UPS, then the UPS connects to the Mains.
- For 9PX PPDM configurations, the AC input of the 9PX PPDM connects to the Mains.
- For configurations with an MBP or EBM, refer to the appropriate MBP or EBM user's guide for installation and system configuration information.

9PXTFMR5G2 with 9PX5000 or 9PX6000 UPS G2 (Kits 9PX5KTF5G2 and 9PX6KTF5G2)

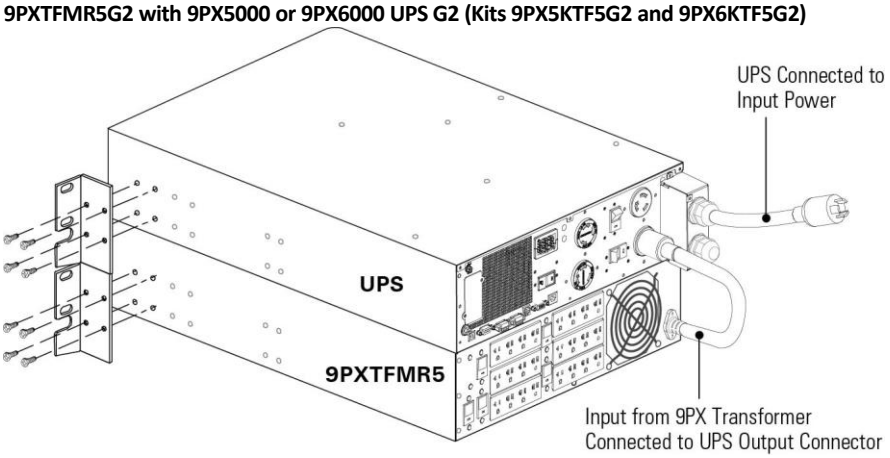

9PXPPDM1G2 with 9PX5000 or 9PX6000 UPS (Kits 9PX5KP1G2 and 9PX6KP1G2)

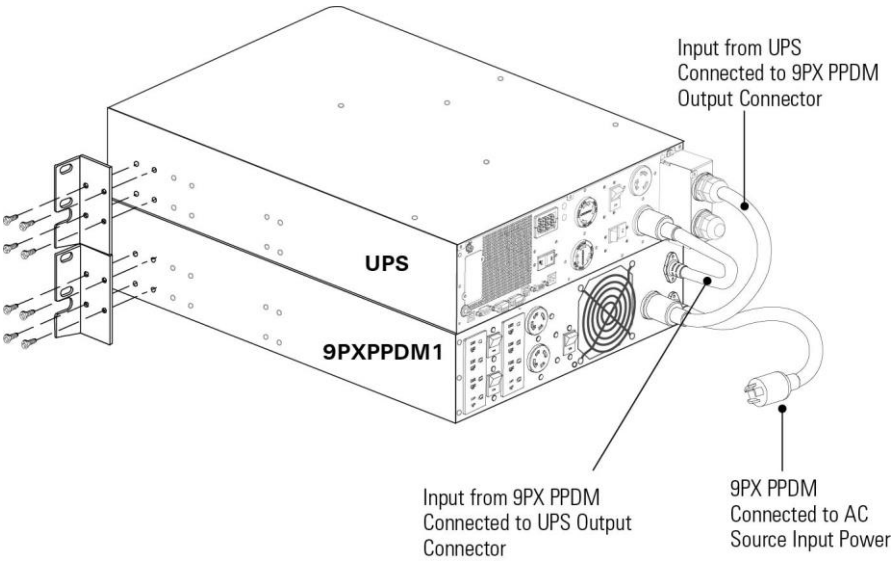

9PXPPDM2G2 with 9PX5000 or 9PX6000 UPS (Kits 9PX5KP2G2 and 9PX6KP2G2)

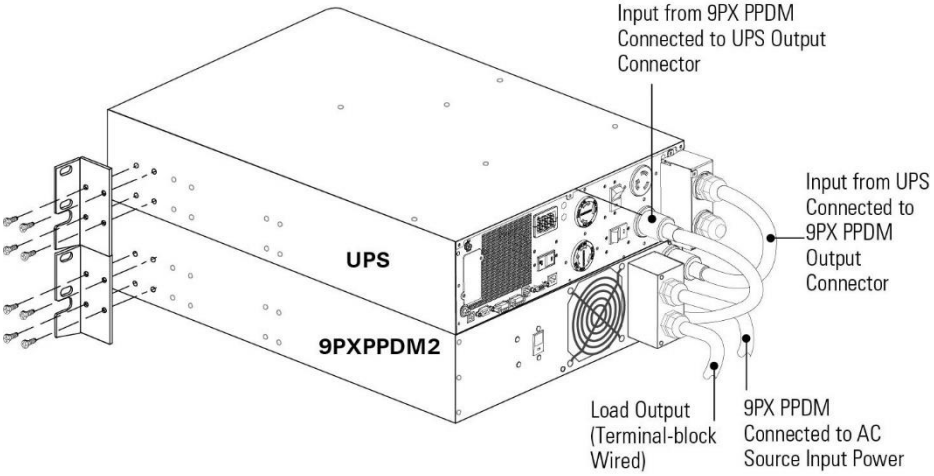

9PXTFMR5G2, 11k 240V EBM, and 11k MBP with 9PX8000 or 9PX11000 UPS (Kits 9PX8KTF5G2 and 9PX11KTF5G2)

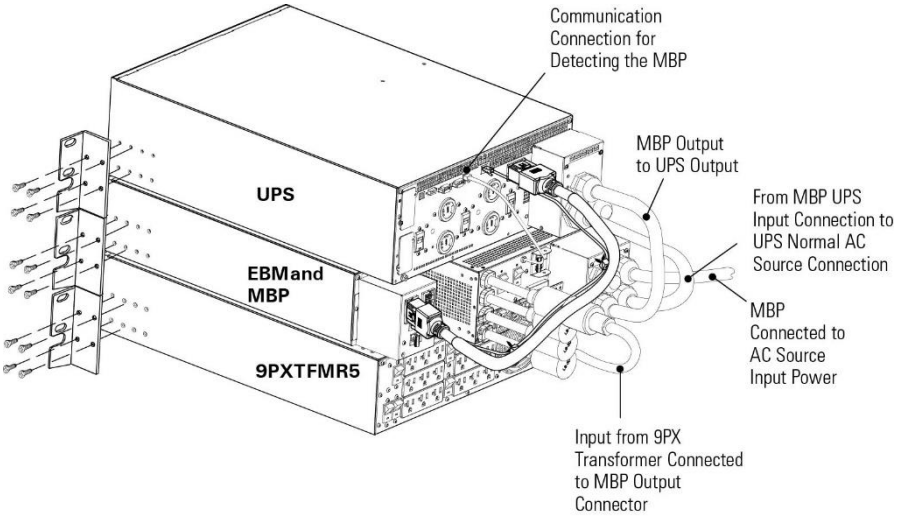

9PXTFMR11G2 and 11k 240V EBM with 9PX11000 UPS (Kit 9PX11KTF11G2)

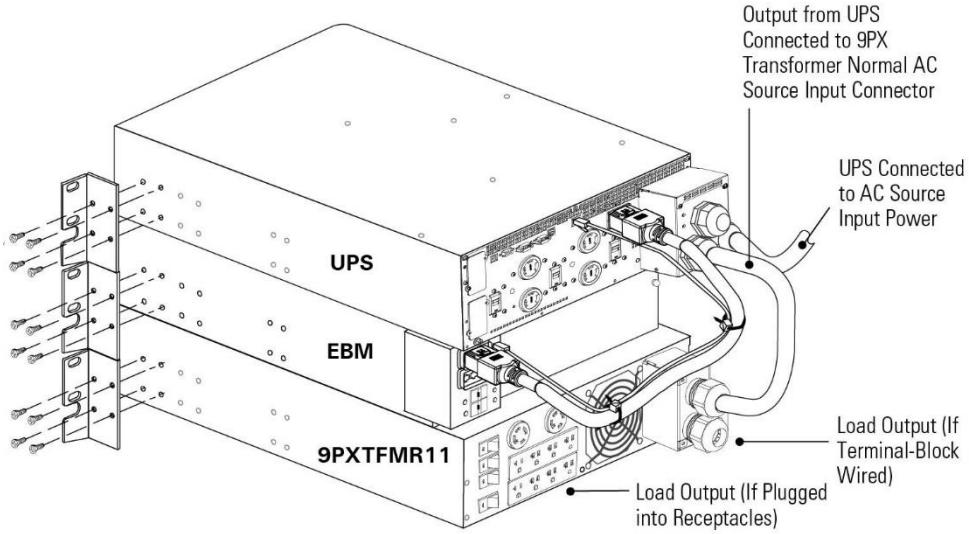
Output from UPS
Connected to 9PX
Transformer Normal AC
Source Input Connector
UPS Connected
to AC Source
Input Power
UPS
EBM
9PXTFMR11
Load Output (If
Terminal-Block
Wired)
Load Output (If Plugged
into Receptacles)

7 Maintenance Bypass

This chapter provides maintenance bypass information for the Eaton 9PX PowerPass Distribution Modules (PPDMs)..

Refer to the 9PX UPS/EBM user's guide for operation information.

The Maintenance Bypass feature allows you to remove the UPS while providing power to your protected equipment. This feature is useful when replacing the UPS for maintenance or upgrades.
The Maintenance Bypass feature is resident on the 9PXPPDM1G2 and 9PXPPDM2G2 models.

You can assemble a system configuration that provides maintenance bypass by adding a 9PX Maintenance Bypass (MBP)/

7.1 Using Maintenance Bypass

To transfer your equipment to maintenance bypass (AC Line operation) and remove the UPS.

1. Using the UPS LCD menu (Control > Go to Bypass), place the UPS in Bypass mode. The indicator displays, indicating the UPS is in bypass mode.
2. On the 9PX PPDM front cover, unsnap and remove the square center cover.
3. Turn the bypass switch on the 9PX PPDM to the BYPASS position. The 9PX PPDM is now powering your equipment from utility power**.**

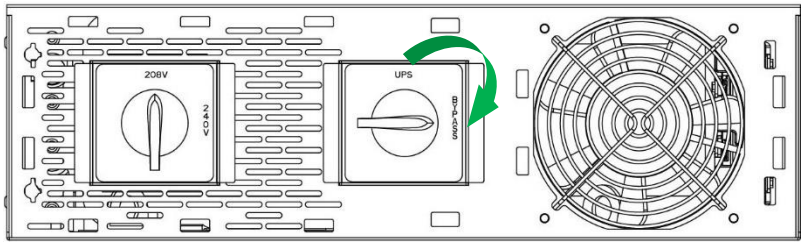

4. Replace the 9PX PPDM square center cover.
5. Press the button on the UPS for approximately three seconds. The UPS turns Off.
6. If optional Extended Battery Modules (EBMs) are installed, switch the battery circuit breaker on the first EBM rear panel to the Off (O) position.

- Unplug and disconnect cables before removing the UPS:
- Unplug the EBM cable and the EBM communication cable from the UPS.
- Disconnect the 9PX PPDM input and output cords from the UPS (see ”System Configuration Connections” for connection illustrations).

7. Remove the UPS.

7.2 Return to Normal UPS Protection

To reinstall the UPS and transfer your equipment from Maintenance Bypass (AC Line operation) to the UPS.

1. If optional Extended Battery Modules (EBMs) are installed, switch the battery circuit breaker on the first EBM rear panel to the On (|) position.

2. Plug the input and output cords of the 9PX PPDM model into the input and output connectors on the UPS (see “System Configuration Connections” for connection illustrations).

3. Press and hold the ⏻ button on the UPS until you hear the UPS beep (approximately three seconds). The ~ indicator remains On.

4. Using the UPS LCD menu, force the UPS to Bypass (Control > Go to bypass). The ⊸ indicator displays, indicating the UPS is in bypass mode.

5. If the 9PX PPDM voltage switch is set to 208V, confirm the UPS output voltage through the front panel (refer to the UPS user's guide).

6. On the 9PX PPDM front cover, unsnap and remove the square center cover.

7. Turn the bypass switch on the 9PX PPDM to the UPS (normal) position.

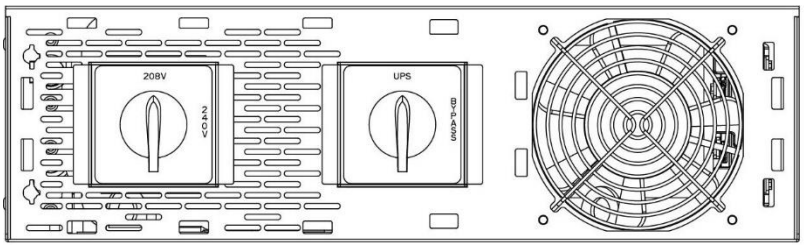

8. Using the UPS LCD menu, force the UPS to Normal mode (Control > Go back Normal). The ~ indicator remains on, indicating that your equipment is now protected by the UPS.

9. Reinstall the 9PX PPDM square center cover

8 Specifications

This chapter provides product specifications and rear panel diagrams for the Eaton 9PX PowerPass Distribution Modules (PPDMs) and 9PX Transformers.

Mechanical and environmental

	9PXTFMR5G2	9PXPPDM1G2	9PXPPDM2G2	9PXTFMR11G2
Operating Temperature	0°C to 40°C (32°F to 104°F)			
Storage Temperature	-22°C to 55°C (-7°F to 131°F)			
Relative Humidity	0–95% noncondensing			
Operation Altitude	Up to 3,000 meters (9,843 ft) above sea level with 10% derating per 1000m			
Transit Altitude	Up to 10,000 meters (32,808 ft) above sea level			
Overall dimensions D x W x H (mm / inch)	440x645x130 mm 17.3”x25.4x5.1”	440x645x130 mm 17.3”x25.4’’x5.1”	440x685x130 mm 17.3”x27.0’’x5.1”	440x645x130 mm 17.3”x28.0”x5.1”
Weight (kg / lb)	43.5 kg (96 lb)	44.5 kg (98 lb)	44.5 kg (98 lb)	85 kg (187 lb)

Input Specifications

Model number	Input (Sine Wave Waveform)				
	Input voltage	Input Current	Input Voltage Range (UPS on Bypass AC Mode)	Frequency Range	Input Protection
9PXTFMR5G2	208V/240V	24A	Full load above 200V	60 Hz (± 3 Hz)	none
9PXPPDM1G2	208V/240V	24A	Full load above 187V	45 - 65 Hz	none
9PXPPDM2G2	208V/240V	24A	Full load above 187V	45 - 65 Hz	Upstream UL 489 type, 30A double-pole CB (not supplied)
9PXTFMR11G2	208V	52A	Full load above 187V	45 - 65 Hz	Upstream UL 489 type, 80A double-pole CB (not supplied)
	240V	50A			

Output Specifications

Model number	Output (Sine Wave Waveform)					
	Nominal Power	Output voltage	Efficiency	Voltage adjustable	Frequency Range	Output Protection
9PXTFMR5G2	5000 VA, 5000 W	120V (x2) isolated	>92% Linear Load	4%	60 Hz (± 3 Hz)	(1) UL 489 type, 30A double-pole CB (4) UL 489 type, 20A CB
9PXPPDM1G2	6000 VA, 6000 W	120V (x2) isolated 240V (x1) isolated	>95% Linear Load	4%	45 - 65 Hz	(1) UL 489 type, 30A double-pole CB (2) UL 489 type, 20A CB
9PXPPDM2G2	6000 VA, 6000 W	120V (x2) isolated 240V (x1) isolated	>95% Linear Load	4%	45 - 65 Hz	(1) UL 489 type, 30A double-pole CB Downstream UL 489 type (not supplied)
9PXTFMR11G2	10000 VA, 10000 W	120V (x2) isolated 240V (x1) isolated	>96% Linear Load	4%	45 - 65 Hz	(1) UL 1077 type, 50A double-pole CB (2) UL 489 type, 30A double-pole CB (2) UL 489 type, 20A CB Downstream UL 489 type (not supplied)

Standards

Safety Conformance	IEC 62040-1:2008, UL 1778 4th; CSA C22.2
Agency Markings	cULus, CE, NOM
EMC (Class A)	IEC 62040-2:2006 categories C2, CISPR22 Class A, FCC Part 15, Class A

Power Connections

Model number	Input Connection	Output Outlets
9PXTFMR5G2	(1) L6-30P, power cord 0.9m (2.3 ft)	(18) 5-20R
9PXPPDM1G2	(1) L6-30P, power cord 0.9m (2.3 ft)	(1) L14-30R; (1) L6-30R; (6) 5-20 R
9PXPPDM2G2	Hardwired Terminal Block 65A/250V x 3)	Hardwired Terminal Block 65A/250V x 4
9PXTFMR11G2	Hardwired Terminal Block 65A/250V x 3)	Hardwired Terminal Block 65A/250V x 4 (2) L14-30R (8) 5-20 R

9 Service and Support

If you have any question or problem with the UPS, call Eaton or your local service representative in your country / region. Please have the following information ready when you call for service:

- Model number
- Serial number
- Firmware version number
- Date of failure or problem
- Symptoms of failure or problem
- Customer return address and contact information

If repair is required, you will be given a Returned Material Authorization (RMA) number. This number must appear on the outside of the package and on the Bill Of Lading (if applicable). Use the original packaging or request packaging from the Help Desk or distributor. Units damaged in shipment as a result of improper packaging are not covered by warranty. A replacement or repair unit will be shipped freight prepaid for all warrantied units.



For critical applications, immediate replacement may be available. Call the Help Desk for the dealer or distributor nearest you.
For US and Canada you can contact post-sales service support at: 1-(800)-356-5737.