

LP1083F-B

User manual

WALL MOUNT FOR 37”-80” SCREENS

VESA: 200x200, 300x200, 400x200, 300x300, 400x300, 400x400

37”- 80” | **75 kg**

Content

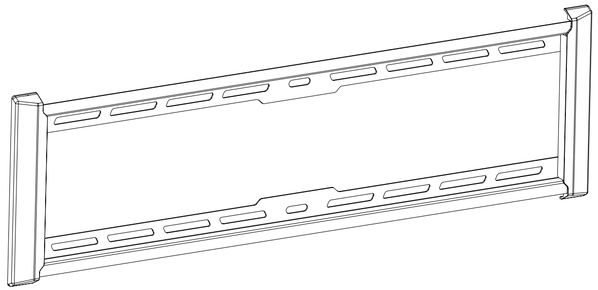

A (x1)

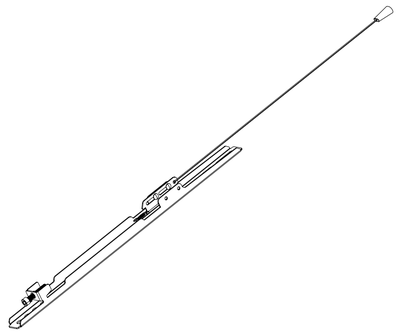

B (x2)



C (x1)



D (x1)
5 mm

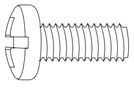

M-A (x4)
M6x14

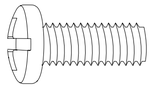

M-B (x4)
M8x16

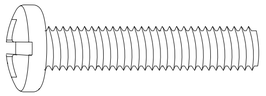

M-C (x4)
M6x30

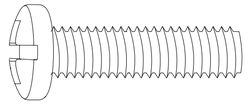

M-D (x4)
M8x35



M-E (x4)
D8



M-F (x4)
Ø15xØ8x5

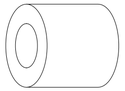

M-G (x4)
Ø15xØ8x15

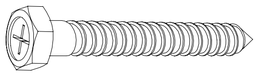

W-A (x6)
ST6.3x55

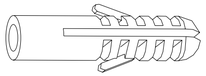

W-B (x6)
Ø10x45



W-C (x6)
D6

Before installation

- Read the instruction manual, if you are in any doubt about the instructions or warnings, contact your local dealer.
- Make sure you have received all parts according to the components checklist for installation. If any parts are missing or defective, please contact your local distributor.



- Installation of heavier products may result in instability and possible personal injury.
- The brackets must be assembled as specified in the assembly instructions. Incorrect installation may result in product failure and serious personal injury.
- Proper safety equipment and tools must be used. This product should only be installed by professionals.
- Ensure that the mounting surface can safely support the total weight of the equipment and all its components.
- Use the supplied mounting screws and DO NOT OVERTIGHTEN THEM.
- This product contains small parts that could be a choking hazard if swallowed.
- Keep these products away from children. This product is intended for indoor use only. Outdoor use will not only damage the product but may also cause personal injury
- Please refer to the product warranty here.

Installation

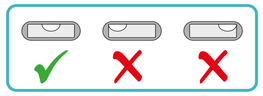

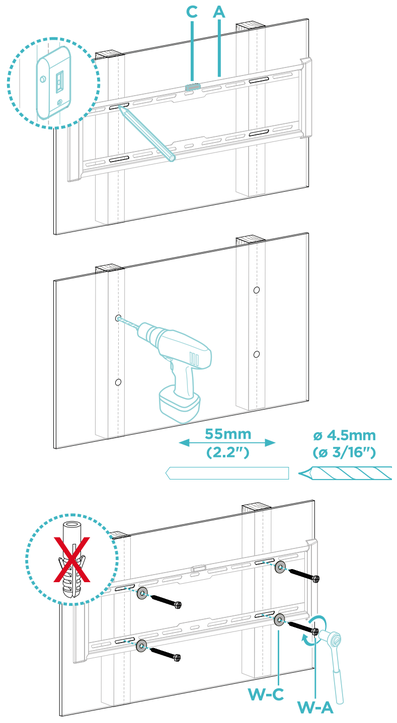

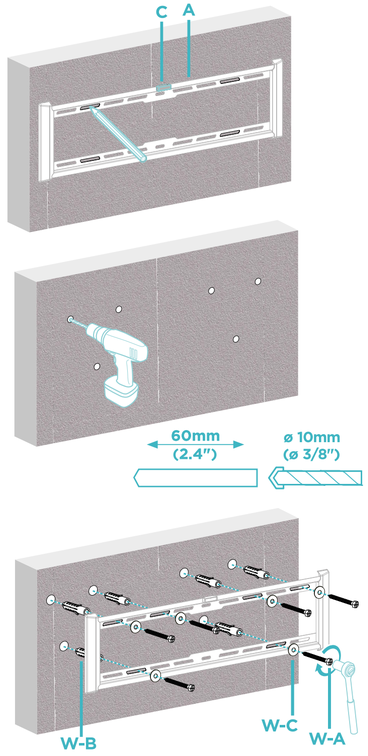

1

Installation

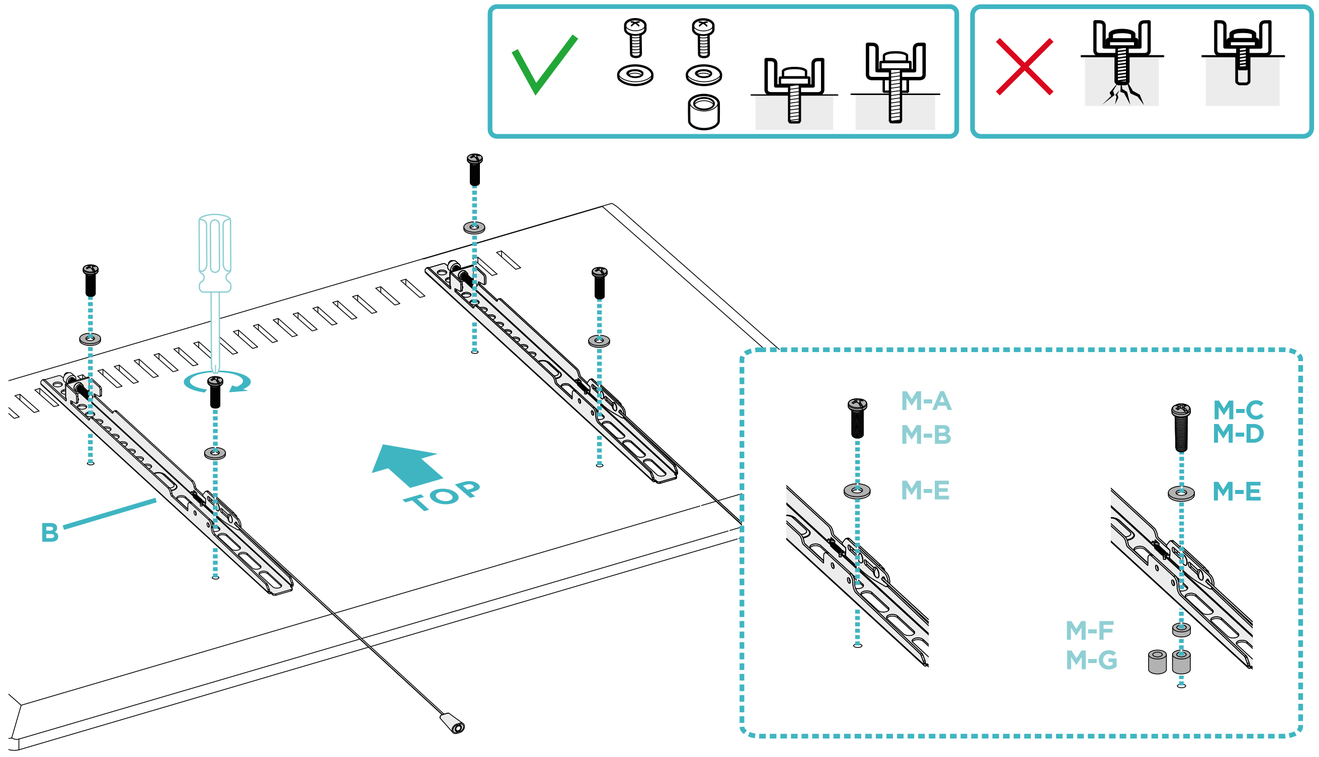

2

Installation

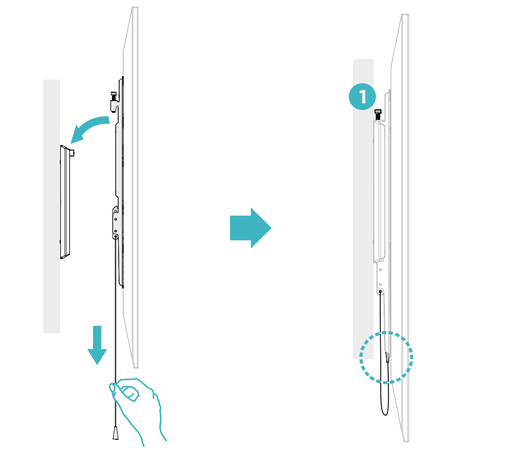

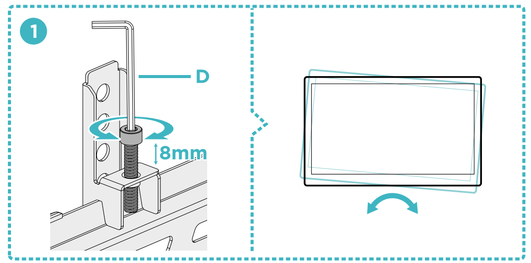

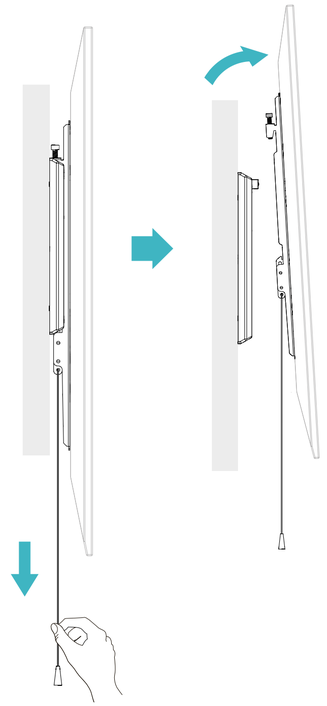



3

Warranty information

Since January 1 2022, TooQ offers a 3-year warranty from the time of purchase, so it will always keep the purchase ticket or invoice containing the date of purchase. The distributor or retailer from whom you purchased the product will attend to your claim and offer technical service while the warranty is in force.

Out of warranty

The warranty does not cover damage or defects caused to the external enclosure due to:

- Not following the user manual.
- Modifications or alterations of any kind.
- High and low temperatures, humidity or contact with liquids.
- Worn and scratches caused by daily use.
- Use the product with any other device which is not the one indicated for its use. The warranty does not cover damage or defects caused to the hard drive by improper use of the hard drive or the external enclosure.

FAQ

You can consult the frequently asked questions from our website www.tooq.com on the product link. Products may be subject to variations due to stock changes, product improvements or printing errors. In case of doubt, please contact us.

Find out about all our news!

Follow us on social media

©2025 by TooQ Technology, S.L.
All Rights Reserved.
tooq.com