INSTRUCTION MANUAL (EN)

Infraplate pro

SIKU Infraplate pro Classic SLIM



CONTENT

Elivery scope 3
Warning signs 3
Models 4
Accessories 5
Note 5
Warnings & precautions 6
Product characteristics 7
Technical data 8
Accessories 10
Equipment configuartion 10
Installation 11
Troubleshooting .....::..... 12
Maintenance & repair 12
Disposal 12
Manufacturer‘s warranty 13
Warranty card 14

Printing errors, mistakes and technical changes reserved.

DELIVERY SCOPE

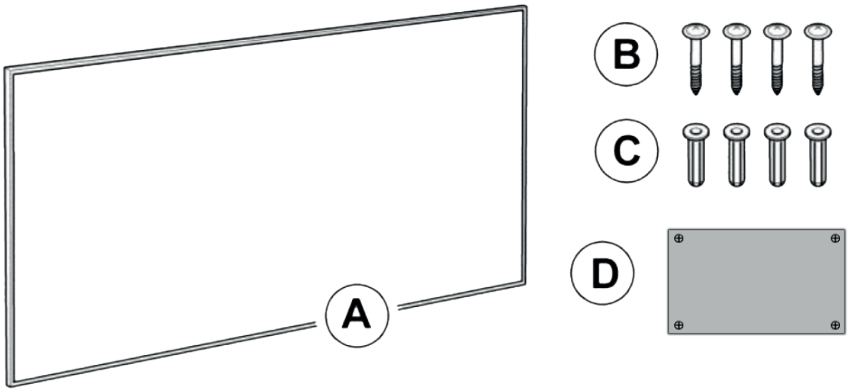

Ⓐ infrared heating plate

Ⓑ screws

Ⓒ dowel

Ⓓ drilling template

WARNING SIGNS



No Covering



No Touching



No Spraying

MODELS

This instruction manual applies to the following models:

SIKU Infraplate pro IPP 1100 SLIM WW	(Art. Nr. 50589)
SIKU Infraplate pro IPP 240 SLIM DW	(Art. Nr. 50585)
SIKU Infraplate pro IPP 400 SLIM DW	(Art. Nr. 50586)
SIKU Infraplate pro IPP 550 SLIM DW	(Art. Nr. 50587)
SIKU Infraplate pro IPP 800 SLIM DW	(Art. Nr. 50588)

“DW“ refers to: Ceiling installation.
“WW“ refers to: Wall installation.

These products are only for well insulated rooms or suitable for occasional use.

ACCESSORIES

Required accessories for heating plates:
The BT710 and BT010 room thermostats require a receiver.



PT712 - digital thermostat with room sensor (Item no. 50446)
- Enables regulation based on the room temperature
- The required temperature can be changed quickly
- 2 weekly programmes with 6 temperature changes per day
- Power reserve for more than 100 hours in the event of a power cut



BT710 - radio room thermostat (Item no. 50434)
- Used to switch electrical heating systems in houses, apartments and offices on and off based on the temperature
- Can control up to 9 receivers
- Simple and flexible installation - without mains connection and cables



BT010 - radio room thermostat (Item no. 50435)
- Can trigger one receiver
- The range within a building is at least 35 m depending on the receiver
- Benefits: the set temperature can be changed quickly using the hand wheel, quick selection switch for night moderation, frost protection



IPP-R01 - Empfänger für BT710 und BT010 - Unterputz (Item no. 50648)
- Suitable for switching infrared heaters, electric radiators, etc. on and off
- The BT001 switches the connected consumers off and on based on the data transferred from the transmitter



BT003 - Empfänger für BT710 und BT010 - in einer Zwischensteckdose (Item no. 50437)
- Suitable for switching infrared heaters, electric radiators, etc. on and off
- The BPT003 switches the connected consumers off and on based on the data transferred from the transmitter
- Plugged directly into the socket



TS20 - Thermoschaltersteckdose (Item no. 50520)
- is a digital, temperature-dependent, switched socket for automatic regulation of SIKU Infraplate pro series electrical heating systems
- up to six time intervals with three temperature levels can be set for each day

NOTE:

Info according to new ERP- Standard 1188:
As of 2018, Infraplate pro Infrared non-storage type heating appliance must be operated only as a combination of a room thermostat with integrated timer and room ventilation detection device.

Thank you for purchasing our product. Please read the User manual carefully before using the product for the first time use and follow all safety precautions to ensure safe use. If you pass the product on to third parties, the operating instructions must also be handed over.

WARNING NOTICES & PRECAUTIONS

1. WARNING NOTICE: The hot plate must not be covered to prevent it from overheating.
2. The hot plate must not be placed underneath a socket.
3. The hot plate must not be operated, when the heater elements are damaged.
4. WARNING NOTICE: The hot plate is not equipped with a temperature measuring device. The hot plate should not be operated in rooms with persons, who are unable of leaving a room on their own or need assistance to do so. Unless the room is constantly supervised.
5. This plant may be used by children as of the age of 8 and persons with restricted physical, sensory, or mental skills or inadequate experiences or knowledge, provided that such persons have been instructed accordingly. The hot plate is no toy and should therefore not be used as such. The cleaning and maintenance must not be performed by children unless they are supervised.
6. Children under 3 years must not operate the device unless they are constantly supervised while they are doing so.
7. Children aged between 3 and 8 years must the device only switch on and off, if the installation and setup of the device has been taken place in accordance with the instructions and a constant supervision or instruction regarding the use and dangers associated can be guaranteed. Children aged between 3 and 8 years must neither connect the device with a power circuit nor regulate, clean, maintain or repair it.
8. In order to avoid dangers associated with a damaged power cord, it must be replaced by the manufacturer, its technicians, or equally qualified persons.
9. CAUTION – Some components of the product may become very hot, which may lead to burnings in case of skin contact. Special precautions should be taken, if the hot plate is operated in the presence of children and disabled persons.
10. WARNING NOTICE: The installation of the device close to curtains or other inflammable materials and substances should be avoided.
11. The device must not be used by persons (including children) with physical, mental, or sensory disabilities, or persons who have not been instructed on the correct operation of the device, unless they are attended by a person in charge of their safety resp. they have been instructed on the use of the device. It must be seen to it that children do not play with the device.
12. The power cord must not be damaged or destroyed. The power cord must not be modified, bent, stretched, pressed or used otherwise against its purpose, as this increases the risk of fire or electrical shock.
13. It must be made sure that the supply voltage is between 220-240 V, 50Hz, and the electric supply has been grounded before the initial use.
14. The hot plate consumes more power than smaller devices, therefore it must be provided for a separate 5A-socket.
15. The device must be kept away from inflammable objects, otherwise there might be a risk of fire.

16. The hot plate must not be placed next to or onto inflammable or meltable objects such as wood, straw, curtains, plastics, etc.
17. Safety distance: 30 cm to the front, each 10 cm to the right and left side.
18. Persons must not jump or climb on the hot plate, high pressure or impacts on the device must be avoided.
19. Single parts of the body must not be exposed to the heat of the hot plate for a longer period, otherwise there might be a risk of slight burnings.
20. The hot plate must never be covered with heat-insulating objects such as towels, blankets, or carpets
21. In order to avoid electrical shocks, burnings, or similar accidents, it must be made sure, that the hot plate is disconnected from the power source and allowed to cool down completely before any cleaning works are performed. A dry cloth should be used for the cleaning. Benzine or acidic detergents must not be used for the cleaning.

PRODUCT CHARACTERISTICS

- The hot plate has been designed for the purpose of an efficient, comfortable, and healthy heating system for domestic use.
- The hot plates provide for both a reduction of the air circulation and the maintenance of a clean, silent, and dustfree indoor climate.
- The devices may be installed either to a wall or ceiling.
- The devices are available in various sizes and designs.
- Once the operating control lamp starts blinking blue (only with devices for wall installation), the device is in service.

TECHNICAL DATA

HEATING ELEMENT	Carbon crystal
VOLTAGE	230 V / 50 Hz
SURFACE TEMPERATURE	75-95 °C
FRONTMATERIAL	IR coating
FRAME	Aluminium white
BACKMATERIAL	Coated steel
OVERHEATING PROTECTION	Yes
ELECTRICAL CONVERSION EFFICIENCY	98%
LED-LIGHT	Yes (only at the WW types)
CABLE LENGTH	1,9 m
PROTECTION	IP54
WARRANTY	5 years

Model	Dimension (mm)	Capacity	Rated current	Weight	Room sizes	Certificates
IPP1100 SLIMWW	1205x905x15	1100 W	4,8 A	6,1 kg	bis zu 16m²	RoHS, CE, TÜV GS
IPP240 SLIMDW	605x505x15	240 W	1,0 A	2,0 kg	bis zu 3m²	RoHS, CE
IPP400 SLIMDW	905x605x15	400 W	1,7 A	3,2 kg	bis zu 7m²	RoHS, CE
IPP550 SLIMDW	1205x605x15	550 W	2,4 A	4,8 kg	bis zu 10m²	RoHS, CE
IPP800 SLIMDW	1205x905x15	800 W	3,5 A	6,1 kg	bis zu 13m²	RoHS, CE

„DW“ stands for ceiling mounting. (When purchasing a „DW“ heating plate, the SIKU IPP-DAS ceiling or the IPP-chain suspension kit is also required as an accessory).
„WW“ stands for wall mounting.

Heat output

Models	Expanse of heat rays	Nominal heat output	Maximum continuous heat output	Auxiliary power consumption at Nominal heat output
IPP1100 SLIMWW	2,1 m	1,1 kW	1,1 kW	1,15 kW
IPP240 SLIMDW	0,7 m	0,3 kW	0,3 kW	0,312 kW
IPP400 SLIMDW	1,2 m	0,6 kW	0,6 kW	0,608 kW
IPP550 SLIMDW	1,4 m	0,7 kW	0,7 kW	0,732 kW
IPP800 SLIMDW	1,9 m	1,1 kW	1,1 kW	1,15 kW

Type of heat input, for electric storage local space heaters only (select one)

manual heat charge control, with integrated thermostat	N/A
manual heat charge control with room and/or outdoor temperature feedback	N/A
electronic heat charge control with room and/or outdoor temperature feedback	N/A
fan assisted heat output	N/A

Type of heat output/room temperature control (select one)

single stage heat output and no room temperature control	NO
Two or more manual stages, no room temperature control	NO
with mechanic thermostat room temperature control	NO
with electronic room temperature control	NO
electronic room temperature control plus day timer	NO
electronic room temperature control plus week timer	YES

Other control options (multiple selections possible)

room temperature control, with presence detection	NO
room temperature control, with open window detection	NO
with distance control option	NO
with adaptive start control	YES
with working time limitation	NO
with black bulb sensor	NO

ACCESSORIES

SIKU IPP-DAS ceiling suspension set (Item no. 50432)
- 4 x 1 meter steel wire, load capacity up to 30 kg
- Length adjustment and locking
- Weight: 0.12 kg
- Load capacity: 30 kg



SIKU IPP-Chain (Item no. 50583)
- Length about 52 cm
- Weight: 0.33 kg
- Load capacity up to 50 kg



EQUIPMENT CONFIGURATION

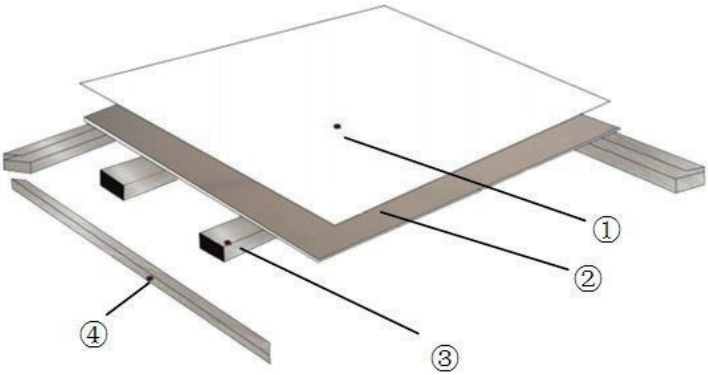

① Heating film

② Insulating gaps

③ Hanger bars made of aluminum alloy

④ Frame made of aluminum alloy

INSTALLATION

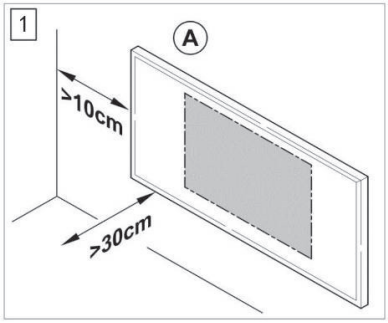

Choose installation position, observe required minimum distances.

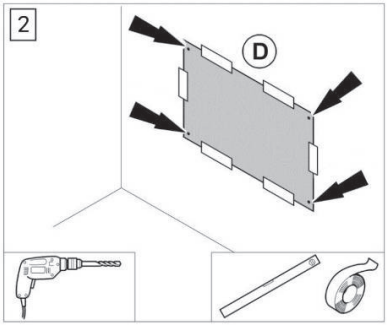

Fix drilling template (D) to the wall, drill holes.

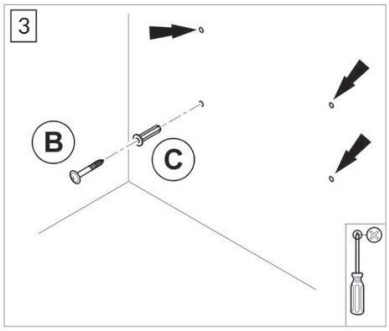

Insert dowels (C).
Position bolts (B) into the bowels. Fasten bolts.
The bolts should extrude about 0.5 cm from the wall.

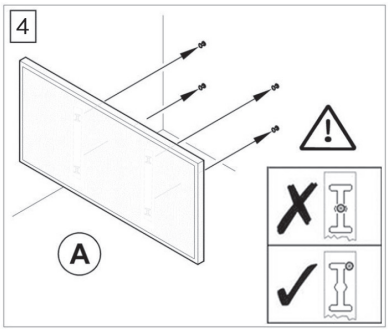

Suspend infra red hot plate (A).

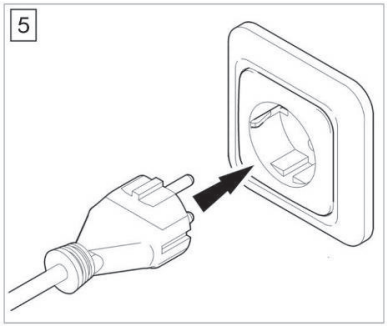

Connect plug with socket.

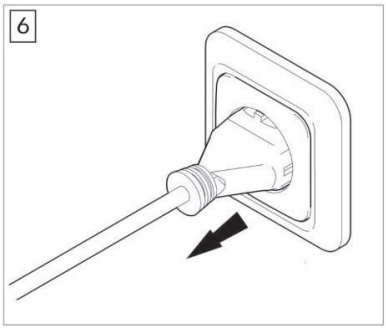

Remove plug from socket, if the device is not in service.

TROUBLESHOOTING

PROBLEM	CAUSE	TROUBLESHOOTING
High noise level after normal connection and initial use.	Built-up of tension in the structure.	Occurs frequently, no counter measures required.
Surface of hot plate bends slightly upwards.	Heat expansion of surface material.	Occurs frequently, no counter measures required.
Surface of hot plate is merely slightly heated.	Operation voltage too low.	Install voltage controller.
	Low ambient temperature.	Normal occurrence.

MAINTENANCE AND REPAIR

1. The device must always be disconnected from the power source before the performance of cleaning works.
2. Wipe exterior of the hot plate with damp or dry cloth.
3. There must be no petroleum or other detergents resp. chemical solvents used for the cleaning of the hot plate.

DISPOSAL

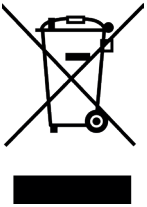

Environmental protection
Electrical products must not be disposed of in domestic waste. Electronic waste must be disposed of at the nearest recycling facility.Information regarding this matter can be obtained from the competent local government or the point of sale at which the device was purchased.

MANUFACTURER‘S WARRANTY

Dear User,
Thank you very much for purchasing SIKU Infrared Panel Heaters.
Sincerely hope that our products can bring you warmth and comfort!

We warrant for a period of 5 years from the production date, which will remedy any defects due to faulty material or workmanship for free through maintenance or replacement.

When making a guarantee claim, please contact dealer or **office@siku.at** firstly.

This warranty card can be sent once we receive and confirm your request as well as other relevant information.
Thanks very much!

Remark:

1. Five years warranty from date of production.
2. Warranty covers manufacturing technical defects excluding breakage.
3. Warranty is void if repairing without our consent or seal is broken.
4. The warranty does not cover faults resulting from operation careless handing or not following instructions.

WARRANTY CARD

Product Name _____

Series & Model Number _____

Fault Description

_____

_____

_____

Dealer Info

Dealer Name _____

Purchase Date _____

Client Contact Info

Client Name _____

Contact Number _____

Address _____

EXTENDED INFORMATION OBLIGATION ACCORDING TO ELEKTROG3

Disposal

Regarding the legally compliant disposal of our electronic devices
We ask that you consider the following points:



1. According to the „crossed-out garbage can“ shown on our electrical devices, these must not be disposed of with the residual waste.

2. According to the Electrical and Electronic Equipment Act (ElektroG), our electrical devices are classified as „small devices“ or „large devices“ and as such must be handed over to municipal collection points for environmentally friendly disposal. This return is not associated with any costs for you.

3. As an alternative to (2), our electrical appliances can be purchased via stationary trade and online trade with a storage/sales area of ≥ 400 sqm can be returned free of charge, whereby the return of a large device is linked to the purchase of a new comparable device. It is also possible to return goods free of charge to food retailers who offer or provide electrical appliances several times and have a total sales area of ≥ 800 square meters.

4. There is an obligation to remove before returning accessible batteries/rechargeable batteries.

5. The supplied batteries/rechargeable batteries are Button cell/lithium (type: primary).

Information on the current status of the take-back rates for waste electrical and electronic equipment can be found at the following link:
https://www.bmu.de/themen/wasser-abfall-boden/abfallwirtschaft/statistiken/elektro-und-elektronikaltgeraete/



SIKU VertriebsgmbH | Bundesstraße 5 | 2102 Bisamberg | Austria
Tel.: +43 2262 61 521 | www.siku.at | office@siku.at