Linux User Guide



ThinkStation P3 Tower Gen 2

Second Edition (August 2025)

© Copyright Lenovo 2025.

LIMITED AND RESTRICTED RIGHTS NOTICE: If data or software is delivered pursuant to a General Services Administration “GSA” contract, use, reproduction, or disclosure is subject to restrictions set forth in Contract No. GS-35F-05925.

Contents

Chapter 1. Product overview 1
Front 1
Left 3
Rear 5
USB specifications 6

Chapter 2. Specification and expansion 7
Basic specifications 7
Memory 8
On-board M.2 SSD 10
PCIe card 11
SD card 12
Storage drive 12

Chapter 3. Get started 15
Connect to an external display 15
Get started with Ubuntu Desktop 15
Access networks 16
Transfer data 16
Connect to a Bluetooth-enabled device (for selected models) 16
Use the optical drive (for selected models) . . 17
Use a media card (for selected models) 17
Set the power plan 18
Smart power-on feature (for selected models) . . . 18
Security solutions 18
Use physical locks 18
Use BIOS security solutions 20
UEFI BIOS passwords 22

Chapter 4. UEFI BIOS 24
Enter the UEFI BIOS menu 24
Navigate the UEFI BIOS menu 24
Update the UEFI BIOS 24
Using the built-in software update service . . . 25
From the Lenovo Support Web site 25

Chapter 5. CRU replacement 26
Before CRU replacement 26
What is CRU 26
CRU list 27
System board illustration 29
Prerequisites for hardware replacement . . . 30
Left side cover 32
Slim-ODD-relevant parts 33
Slim ODD 33
Slim-ODD latch 33
Slim-ODD bezel 34
Slim-ODD cage 35
Slim-ODD front cover 36
Storage 37
Storage drives in the internal storage drive cages 37
Optional storage drive cage 40
Storage drive in the optional storage drive cage 41
Storage drive in the front-access storage enclosure 43
Front-access storage enclosure 48
On-board M.2 SSD and heat sink 49
On-board M.2 SSD holder 51
M.2 SSD and heat sink in an M.2 SSD PCIe adapter card 51
Side fan with bracket 54
Front fan 54
Front bezel 55
3-in-1 card reader 57
PCIe cards 58
PCIe card replacement rule 58
PCIe card bracket 59
Broadcom 940-8i RAID card battery and box 59
PCIe adapter card 60
Graphics card 61
Flexible I/O port card 64
Chassis beam 66
Rear fan 67
Cover presence switch 69
Internal speaker 69
Wi-Fi antenna cover 70
Smart cable clip 71
Memory module 72
E-lock 73
Chassis rubber foot 74

Chapter 6. Help and support 75
Find your serial number 75
Troubleshoot and diagnose at Lenovo Support Web site 75
Call Lenovo 76
Before you contact Lenovo 76
Lenovo Customer Support Center 76
Self-help resources 77
Purchase accessories or additional services . . . 77

© Copyright Lenovo 2025

Accessibility features 77
Supplemental information about the Ubuntu operating system 77

Appendix A. Notice for USB connector name update 80

Appendix B. Notices and trademarks 81

About this documentation

This documentation applies to the ThinkStation® product models listed below.

Model name	Machine types (MT)
ThinkStation P3 Tower Gen 2	30HT, 30HS, 30HX

Before using this documentation, please read the following information:

- *Setup Guide*
- *Safety and Warranty Guide*
- For more compliance information, refer to https://www.lenovo.com/compliance, *Regulatory Notice* at https://support.lenovo.com/docs/common_commercial_rn, and *Generic Safety and Compliance Notices* at https://pcsupport.lenovo.com/docs/generic_notices.
- Hardware configurations and software programs vary by machine type. Some statements or illustrations in this documentation might be slightly different from your computer.
- Documentation content is subject to change without notice. To get the latest documentation, go to https://pcsupport.lenovo.com.

Chapter 1. Product overview

Front

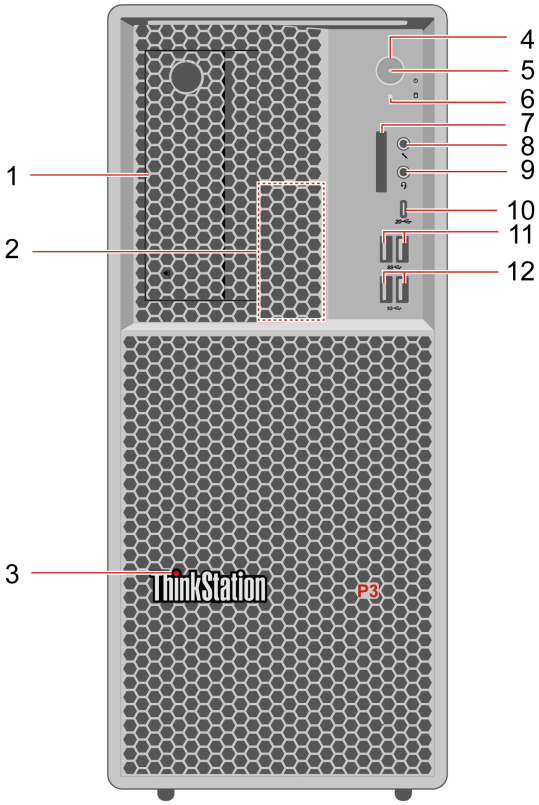

Item	Description	Item	Description
1	Flex bay	2	Internal speaker
3	ThinkStation LED	4	Power button
5	Power indicator	6	Storage indicator
7	Secure Digital (SD™) card slot	8	Microphone connector
9	Headset connector	10	USB-C® connector (USB 20 Gbps)
11	USB-A® connectors (USB 5 Gbps)	12	USB-A connectors (USB 10 Gbps)

* for selected models

Flex bay

Depending on your computer model, the flex bay can be empty or installed with one of the following devices:

- Front-access storage enclosure*
- Optional storage drive cage*
- Slim optical drive (ODD) cage*

For more details, see “Storage drive” on page 12.

© Copyright Lenovo 2025

Power indicator

Show the system status of your computer.

- **On:** The computer is starting up or working.
- **Off:** The computer is off or in hibernation mode.
- **Blinking:** The computer is in sleep mode.

Storage indicator

The storage indicator blinks when a storage drive is being reading from or writing to. However, it does not blink when creating a RAID volume with only SATA drives using the Broadcom 940-8i configuration utility.

SD-card slot

The SD-card slot can be empty or installed with a 3-in-1 card reader that supports the following three types of SD card:

- SD card
- SD High Capacity (SDHC™) card
- SD Extended Capacity (SDXC™) card

Headset connector

The headset connector is compatible with:

- Headphones or earphones with a 3.5 mm (0.14 inches), TRS (3-pole) plug
- Headsets with a 3.5 mm (0.14 inches), CTIA-compliant TRRS (4-pole) plug, or OMTP-compliant TRRS (4-pole) plug

Note: This headset connector does not support standalone external microphones with a TRS (3-pole) plug.

Left

For models with 500-watt power supply

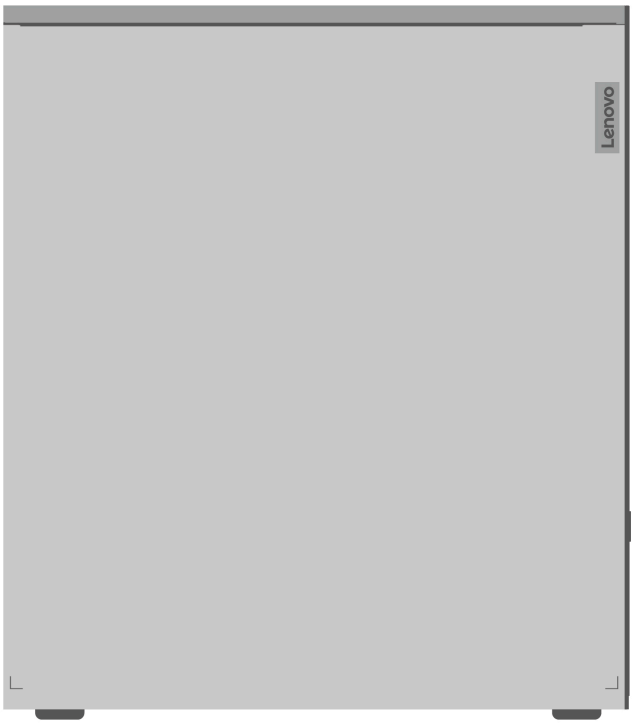

For models with 750-watt or 1100-watt power supply

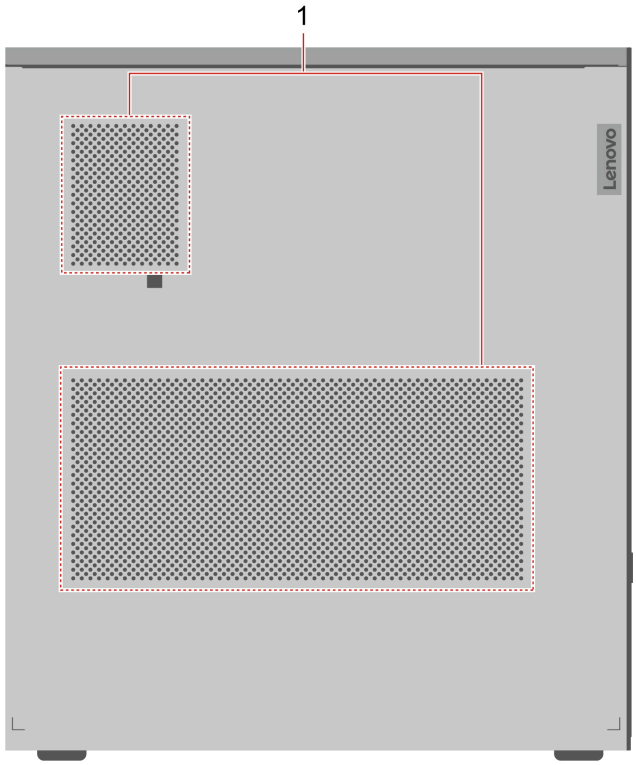

Item	Description
1	Side air vents

Attention: Do not block air vents on the side cover. To ensure heat dissipation, do not place any objects within 30 mm (1.18 inches) from the side cover.

Rear

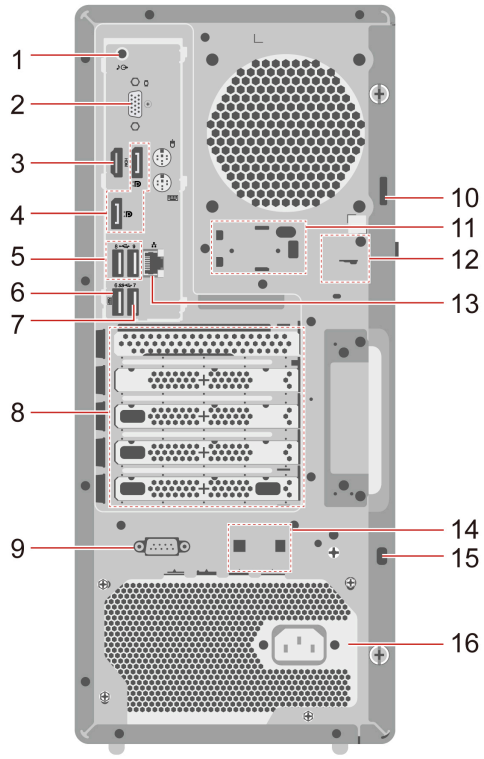

Item	Description	Item	Description
1	Audio line-out connector	2	Flexible I/O port
3	HDMI™ out connector	4	DisplayPort™ out connectors
5	USB-A connectors (Hi-Speed USB)	6	USB-A connector (USB 5 Gbps) (with smart power-on feature)
7	USB-A connector (USB 5 Gbps)	8	PCIe card area
9	Serial out connector*	10	Padlock loop
11	Wifi antenna cover slot	12	E-lock slots
13	Ethernet connector	14	Smart cable clip slots
15	Security-lock slot	16	Power cord connector

* for selected models

Flexible I/O port

Depending on the computer model, the flexible I/O port can be one of the following video output connectors:

- DisplayPort out connector*
- HDMI out connector*
- VGA out connector*
- USB-C out connector*

PCIe card area

Depending on the PCIe cards installed, connectors in this area might be USB connectors, Ethernet connectors, video output connectors, or other connectors. If a graphic card is installed into this area, there can be the following video out connectors:

- HDMI out connectors*
- DisplayPort out connectors*
- MiniDisplayPort™ out connectors*
- DVI out connectors*

See “PCIe card” on page 11 for PCIe card specifications and “PCIe cards” on page 58 for replacement steps and rules.

Serial out connector

Connect an external modem, a serial printer, or other devices that use a serial out connector.

USB specifications

Note: Depending on the model, some USB connectors might not be available on your computer.

Connector name	Description
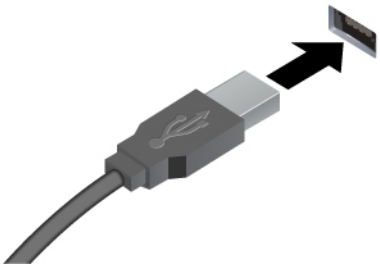 • USB-A connector (Hi-Speed USB) • SS USB-A connector (USB 5 Gbps) • 10 USB-A connector (USB 10 Gbps)	Connect USB-A compatible devices, such as a USB-A keyboard, USB-A mouse, USB-A storage device, or USB-A printer.
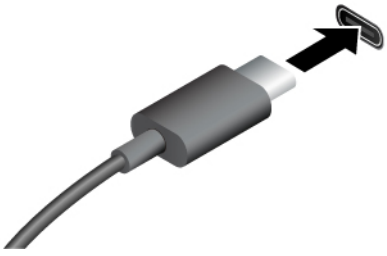 • 20 USB-C connector (USB 20 Gbps) • USB40G or 40Gbps USB-C connector (USB4 40Gbps)	• Charge USB-C compatible devices with the output voltage and current of 5 V and 5 A. • Depending on the computer model, the flexible I/O port on the rear panel can be a USB-C out connector. Connect to an external display using the USB-C out connector: – USB-C to VGA: 1920 x 1200 pixels, 60 Hz – USB-C to DP: 3840 x 2160 pixels, 60 Hz • Connect to USB-C accessories to help expand your computer functionality. To purchase USB-C accessories, go to https://www.lenovo.com/accessories.

Chapter 2. Specification and expansion

Your computer may come with the specifications and expansion possibilities introduced in this chapter.

Basic specifications

Chassis

- Form factor: 27 L tower
- Width: 180 mm (7 inches)
- Depth: 370 mm (15 inches)
- Height (with feet): 415 mm (16 inches)
- Weight (maximum configuration as shipped without packaging): 14 kg (30 lb)

Hardware configuration

1. Open the system menu from the top-right corner and click ⚙.
2. Click **System → About**.

Power supply

Your computer comes with one of the following power supplys:

- 1100-watt automatic voltage-sensing power supply
- 750-watt automatic voltage-sensing power supply
- 500-watt automatic voltage-sensing power supply

Electrical input

- Input voltage: From 100 V ac to 240 V ac
- Input frequency: 50/60 Hz

Microprocessor

To view the microprocessor information of your computer:

1. Open the system menu from the top-right corner and click ⚙.
2. Click **System → About**.

Video features

The integrated graphics card supports the following video output connectors:

- Two DisplayPort out connectors
- One HDMI out connector
- Flexible I/O port* that can be one of the following connectors:
  - DisplayPort out connector*
  - HDMI out connector*
  - VGA out connector*
  - USB-C out connector*

© Copyright Lenovo 2025

Your computer supports up to two discrete graphics cards, which provide an enhanced video experience and extended capabilities. Depending on the graphics card installed, there can be the following video output connectors:

- HDMI out connectors*
- DisplayPort out connectors*
- MiniDisplayPort out connectors*
- DVI out connectors*

* for selected models

Network features

- Bluetooth*
- Ethernet LAN
- Wireless LAN*

* for selected models

Operating environment

- Maximum altitude (without pressurization):
  - Operating: From 0 m (0 ft) to 3048 m (10 000 ft)
  - Storage: From 0 m (0 ft) to 12192 m (40 000 ft)
- Temperature:
  - Operating: From 10°C (50°F) to 35°C (95°F)
  - Storage: From -40°C (-40°F) to 60°C (140°F)
- Relative humidity:
  - Operating: 20% to 80% (non-condensing)
  - Storage: 10% to 90% (non-condensing)

Memory

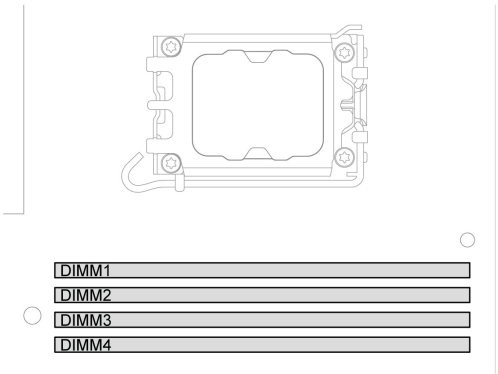

Quantity

1, 2, or 4 memory modules

Capacity and type

Capacity	Type
8 GB, 16 GB, 32 GB, or 48 GB	DDR5-5600 non-ECC UDIMM
16 GB, 32 GB, or 48 GB	DDR5-5600 ECC UDIMM
64 GB	DDR5-6400 non-ECC CUDIMM **Note:** BIOS version higher than S0MKT11A is required.

System memory speed

Your computer can come with one of the following types of memory modules and will run up to the following speed:

Memory module capacity	Memory module quantity	Memory module speed
8 GB, 16 GB, 32 GB, 48 GB, or 64 GB	1 or 2	5600 MT/s
8 GB or 16 GB	4	4800 MT/s
32 GB, 48 GB, or 64 GB	4	4400 MT/s

To avoid unexpected frequency reduction, ensure that you install memory modules following the replacement steps and rules.

Notes:

- The actual system memory speed of the memory modules varies depending on the microprocessor model. For example, your computer comes with 6400 MT/s memory modules, but the microprocessor only supports up to 5600 MT/s memory modules. Then the system memory speed will be no faster than 5600 MT/s. For microprocessor models supported in your computer, contact the Lenovo Customer Support Center.
- If you install memory modules of different speed, the actual system memory speed will be set to the lowest speed of all the memory modules.

Replacement steps and rules

To install or replace a memory module, see “Memory module” on page 72 for replacement steps and rules.

On-board M.2 SSD

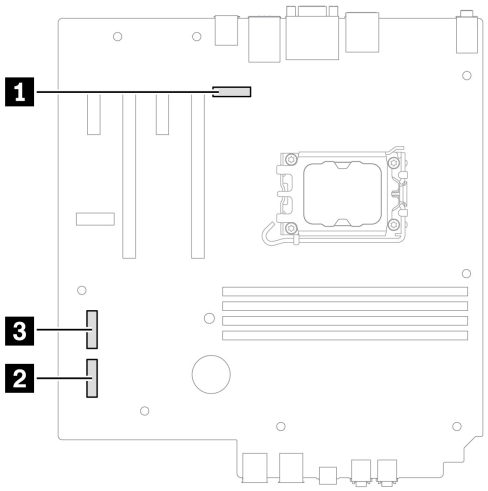

Type

Slot	Supported M.2 solid-state drive (SSD) type
1 M.2 SSD slot (Gen 5)	• 2280 Gen 4 M.2 SSD • 2280 Gen 5 M.2 SSD **Note:** For better performance, install Gen 5 M.2 SSD in the slot 1.
2 3 M.2 SSD slots (Gen 4)	2280 Gen 4 M.2 SSD

Replacement steps and rules

To install or replace an on-board M.2 SSD, see “On-board M.2 SSD and heat sink” on page 49 for replacement steps and rules.

PCIe card

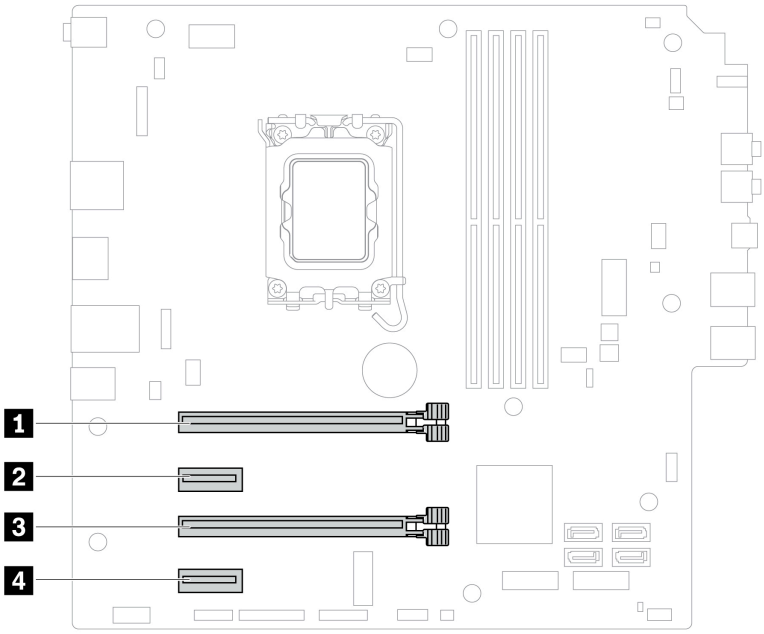

Your computer has four PCIe slots to install PCIe cards such as graphics card, M.2 SSD PCIe adapter card, Broadcom 940-8i RAID card, USB4 PCIe card, and other kinds of PCIe adapter card.

Slot	Type
1	PCIe x16 Gen 5 slot
2	PCIe x1 Gen 3 slot
3	PCIe x4 Gen 4 slot (physical link width x16 and negotiable link width x4)
4	PCIe x1 Gen 3 slot

Replacement steps and rules

To install or replace a PCIe card, see “PCIe cards” on page 58 for replacement steps and rules.

SD card

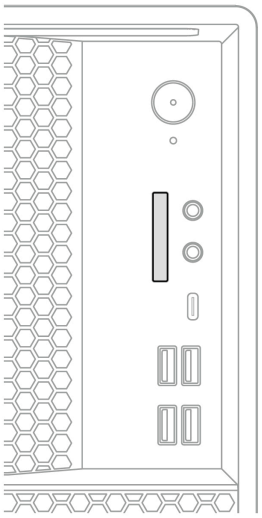

Your computer has an SD-card slot on the front panel. In the SD-card slot, you can install a 3-in-1 card reader that supports one of the following three types of SD card:

- SD card
- SD High Capacity (SDHC™) card
- SD Extended Capacity (SDXC™) card

To add or replace a 3-in-1 card reader, see “3-in-1 card reader” on page 57 for replacement steps and rules.

Storage drive

Supported storage cages in the storage bays

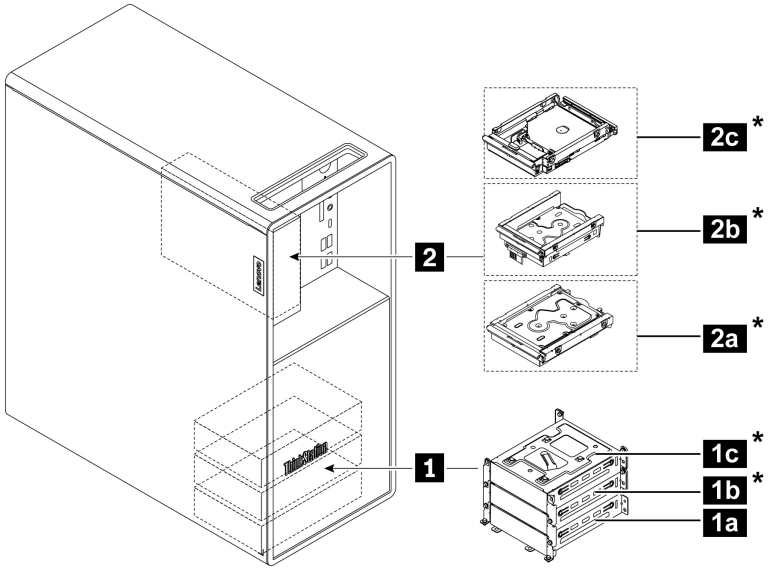

* for selected models

Item	Storage bay name	Supported storage cages
1	Internal storage drive bay	1a, 1b, 1c: internal storage drive cages • 1a is standard for all models. • 1c is not an available option when the computer comes with a 750-watt or 1100-watt power supply or when the M.2 SSD slot (Gen 4) is occupied.
2	Flex bay	Zero (empty) or one of the following storage drive cages: • 2a: Optional storage drive cage • 2b: Front-access storage enclosure • 2c: Slim ODD cage

Supported drives in the storage cages

Storage cages	Supported drives
1a, 1b, 1c, 2a, 2b	Zero (empty) or one of the following storage drives with a compatible storage drive tray: • 3.5-inch hard-disk drive (HDD) • 2.5-inch SSD with a compatible storage drive converter **Note:** Compatible storage drive tray and converter vary by storage cages. See the compatibility in the table below.
2c	A slim ODD

Compatible storage drive trays and converters in storage cages

Storage cages	Compatible storage drive tray	Compatible storage drive converter
1a, 1b, 1c, 2a		
2b		

Priority of storage cages

- For 2b or 2c, there is no required priority order.
- For 1a, 1b, 1c, and 2a, follow this priority order:

Priority	Storage drive cage
1	1a
2	1b
3	2a
4	1c

Replacement steps and rules of devices in the storage bays

To add or replace a device in the storage bays, see “Storage” on page 37 and “Slim-ODD-relevant parts” on page 33 for replacement steps and rules.

Chapter 3. Get started

Connect to an external display

Connect to a wired display

The integrated graphics card of your computer supports at least three and up to four video output connectors. When two four-port discrete graphics cards are installed, there can be up to eight video output connectors. Therefore, you can connect your computer to up to 12 wired displays. To connect to a wired display:

1. Connect one end of the display cable or adapter to the HDMI, Mini DisplayPort, DisplayPort, or other video output connectors on your computer.
2. Connect the other end of the cable or adapter to the external display.

Change display settings

Right-click a blank area on the desktop and select **Display settings**. Then, you can change display settings as you prefer.

Get started with Ubuntu Desktop

Learn the basics of Ubuntu and start working with it right away. For more information about Ubuntu, see the Ubuntu documentation site at: https://help.ubuntu.com/lts/ubuntu-help/index.html.

The Gnome desktop is installed by default and is designed to be simple and easy to use. Details on using Gnome are available by launching the Help application or online at https://help.gnome.org/users/.

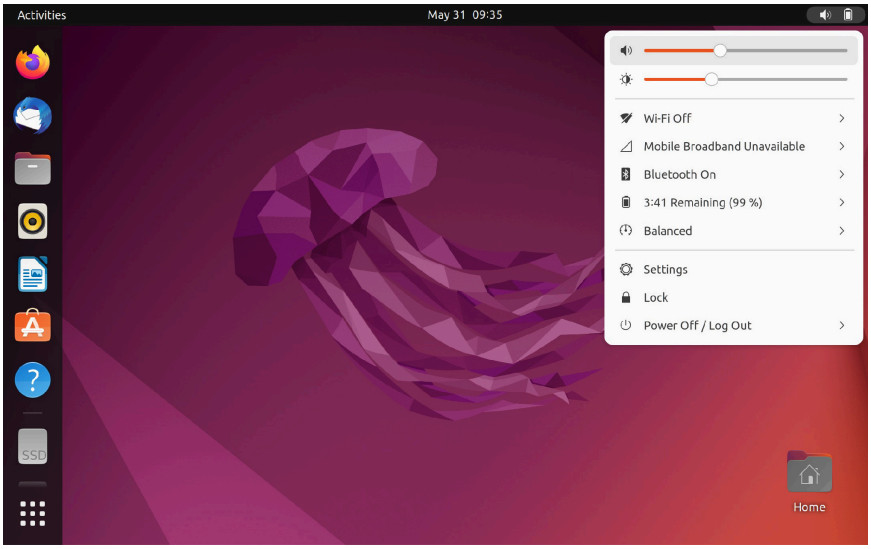

Launch an app

- Press the Super key (with the Windows logo) or open the Activities menu on the top left and type in the name of the application you want to launch.
- Click the **Show Apps** button on the lower left, and select the application you want to launch.

© Copyright Lenovo 2025

Launch settings

Open the system menu from the top-right corner and click ⚙.

Access networks

This section helps you connect to a wireless or wired network.

Connect to Wi-Fi networks

If your computer includes a wireless LAN module, you can connect your computer to Wi-Fi®networks.

1. Open the system menu from the top-right corner and expand the Wi-Fi section of the menu.
2. Click **Select Network**. A list of available wireless networks is displayed.
3. Select a network available for connection. Provide required information, if needed.

Connect to the wired Ethernet

Connect your computer to a local network through the Ethernet connector on your computer with an Ethernet cable.

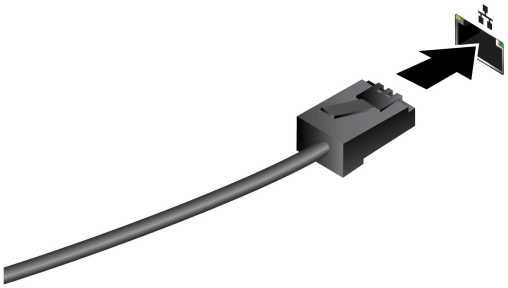

Note: For models with an Intel X710-T2L Ethernet adapter, it's recommended to prepare a Shielded Twisted Pair (STP) Category 6A Ethernet cable for Ethernet connection on the adapter.

Transfer data

Quickly share your files using the built-in Bluetooth technology among devices with the same features. You also can install a disc or media card to transfer data.

Connect to a Bluetooth-enabled device (for selected models)

You can connect all types of Bluetooth-enabled devices to your computer, such as a keyboard, a mouse, a smartphone, or speakers. Place the device that you are attempting to connect to less than 10 meters (33 feet) from the computer.

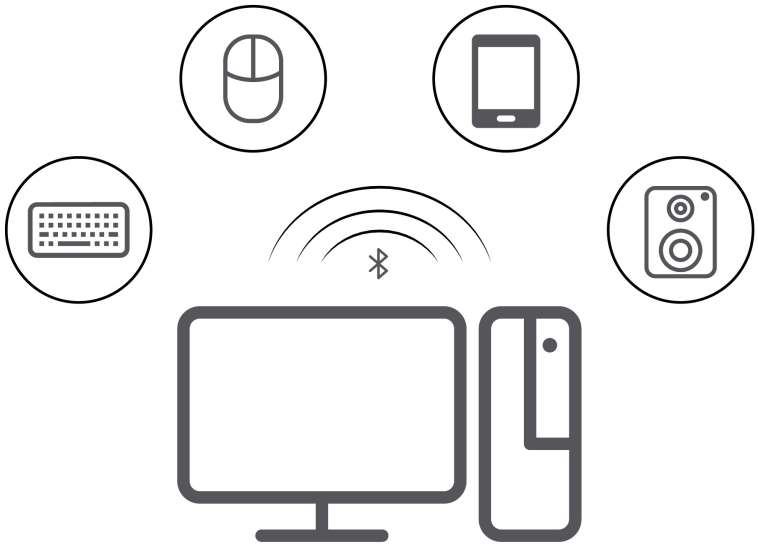

1. Turn on Bluetooth on the computer.
   a. Open the system menu from the top-right corner and then click **Settings → Bluetooth**.
   b. In the Bluetooth section enable Bluetooth with the toggle button at the top.
2. Any discoverable devices will be shown in the **Devices** list.
3. Select a Bluetooth device, and then follow the on-screen instructions.

Use the optical drive (for selected models)

If your computer has an optical drive, read the following information.

Install or remove a disc

1. With the computer on, press the eject button on the optical drive. The tray slides out of the drive.
2. Insert a disc into the tray or remove a disc from the tray, and then push the tray back into the drive.

Note: If the tray does not slide out of the drive when you press the eject button, turn off the computer. Then, insert a straightened paper clip into the emergency-eject hole adjacent to the eject button. Use the emergency eject only in an emergency.

Record a disc

1. Insert a recordable disc into the optical drive that supports recording.
2. In the **Blank CD/DVD-R Disc** notification that pops up at the bottom of the screen, select **Open with CD/DVD Creator**.
3. Follow the on-screen instructions.

Use a media card (for selected models)

If your computer has an SD-card slot, read the following information.

Install a media card

1. Locate the SD-card slot.
2. Ensure that the metal contacts on the card are facing the ones in the SD-card slot. Insert the card firmly into the SD-card slot until it is secured in place.

Remove a media card

Attention: Before removing a media card, unmount the card from the operating system first. Otherwise, data on the card might get corrupted or lost.

1. Launch the **Files** application.
2. Select the unmount icon next to the card and unmount the card from the operating system.
3. Press the card and remove it from your computer. Store the card safely for future use.

Set the power plan

For ENERGY STAR® compliant computers, the following power plan takes effect when your computers have been idle for a specified duration:

- Turn off the display: After 5 minutes
- Put the computer to sleep: After 20 minutes

To awaken the computer from Sleep mode, press any key on your keyboard.

To set the power plan:

1. Go to **Settings → Power**.
2. Choose or customize a power plan of your preference.

Smart power-on feature (for selected models)

The smart power-on feature helps you start up or wake up the computer from the hibernation mode simply by pressing Alt+P.

Note: Ensure that the keyboard is connected to a USB connector supporting the smart power-on feature.

Enable or disable the smart power-on feature

To enable or disable the smart power-on feature:

Step 1. Restart the computer. When the logo screen is displayed, press F1 or Fn+F1.

Step 2. Select **Power → Smart Power On** and press Enter.

Step 3. Enable or disable the feature as desired.

Step 4. Press F10 or Fn+F10 to save the changes and exit.

Security solutions

Lenovo values your information security. Your computer can be secured by physical locks, software solutions, and BIOS solutions. They can protect your computer from harm, theft, or unauthorized use.

Use physical locks

Note: Lenovo makes no comments, judgments, or warranties about the function, quality, or performance of the locking device and security feature. You can purchase a padlock or a security lock from Lenovo.

Padlock

Lock the computer cover through a padlock prevents unauthorized access to the inside of your computer.

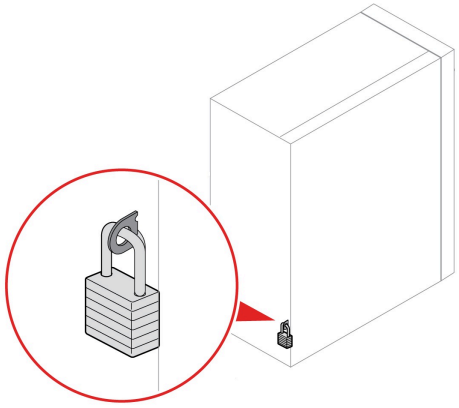

Security lock

Lock your computer to a desk, table, or other fixtures through a security lock.

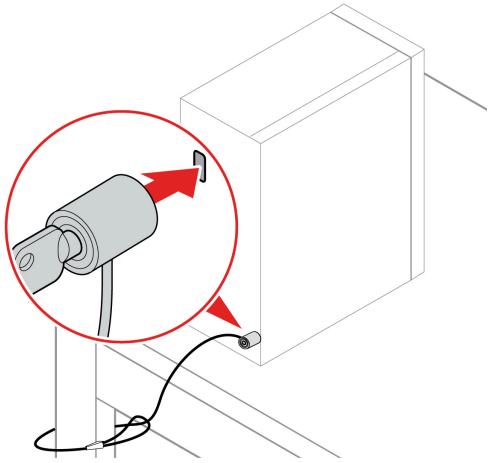

Lock of the front-access storage enclosure

Your computer might have a front-access storage enclosure with lock. The lock prevents any unexpected removal or data loss. The keys are attached at the rear panel of the computer.

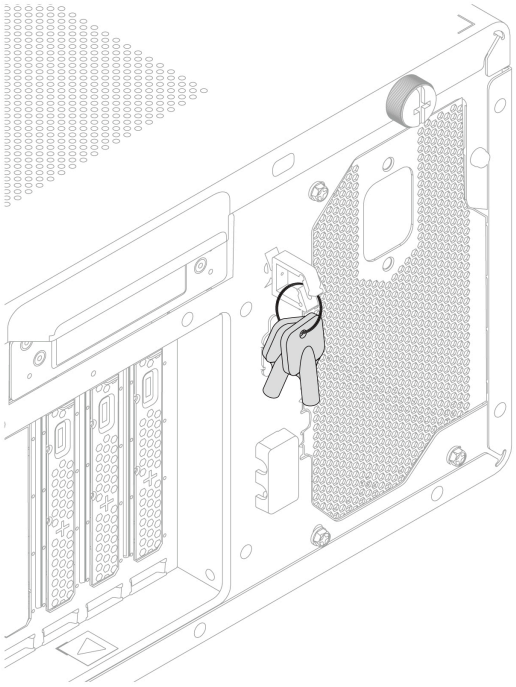

To unlock the front-access storage enclosure to install or replace the storage drive, see Storage drive in the front-access storage enclosure.

E-lock

Your computer might have an E-lock installed to protect the computer from unauthorized tampering of the internal components. Using the E-Lock, you can mechanically lock or unlock the computer cover. To enable or disable the E-Lock:

1. Restart the computer. When the logo screen is displayed, press F1 or Fn+F1.
2. Select **Security → Electronic Lock** to enable or disable the E-lock.
3. Press F10 or Fn+F10 to save the changes and exit. Your computer will restart automatically and then changes take effect.

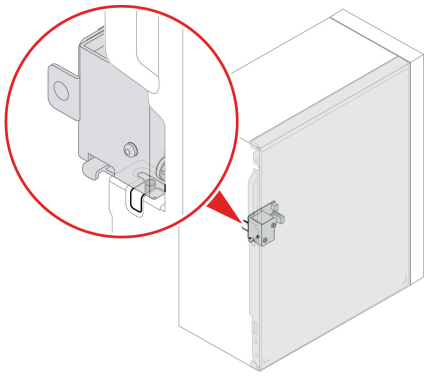

Use BIOS security solutions

This section provides BIOS solutions to secure your computer and information.

Wipe the storage drive data (for selected models)

It is recommended that you wipe the storage drive data before recycling the storage drive or the computer.

To wipe the storage drive data:

1. Restart the computer. When the logo screen is displayed, press F1 or Fn+F1.
2. Select **Security → secure wipe → Enabled**.
3. Press F10 or Fn+F10 to save the changes and exit.
4. Restart the computer. When the logo screen is displayed, press F12 or Fn+F12.
5. Select **App Menu → secure wipe** and press Enter.
6. Select the storage drive you will wipe and click **NEXT**.
7. Select the entire storage drive or partition to wipe as desired.
8. Select the method as desired and click **NEXT**.
9. Click **Yes** to confirm your option when the prompting window is displayed.
10. If you have set a hard disk password for the storage drive, enter the password. Otherwise, set a temporary password following the on-screen instructions. Then, click **NEXT**. The wiping process begins.

    Note: Duration of the wiping process varies depending on the storage drive capacity.
11. Click **Reboot** when you are prompted to reset the system, and then one of the following will happen:
    - If the system storage drive data is wiped, you will be prompted that no operating system is found.
    - If the non-system storage drive data is wiped, the computer restarts automatically.

Cover presence switch

The cover presence switch prevents the computer from logging in to the operating system when the computer cover is not properly installed or closed.

To enable or disable the cover presence switch connector on the system board:

1. Restart the computer. When the logo screen is displayed, press F1 or Fn+F1.
2. Select **Security → Cover Tamper Detected** and press Enter.
3. Select **Enabled** or **Disabled** and press Enter.
4. Press F10 or Fn+F10 to save the changes and exit.

If the cover presence switch is enabled and the computer cover is not correctly installed or closed, an error message will be displayed when you turn on the computer. To bypass the error message and log in to the operating system, properly install and close the computer cover, and then enable the cover presence switch connector again in the BIOS menu.

Intel BIOS guard

The Intel® BIOS Guard module cryptographically verifies all BIOS updates. This hardware-based security helps prevent software and malware attacks on the computers BIOS.

Smart USB Protection

The Smart USB Protection function is a security function that helps prevent data from being copied from the computer to USB storage devices connected to the computer. You can set the Smart USB Protection function to one of the following modes:

- **Disabled** (default setting): You can use the USB storage devices without limitation.
- **Read Only**: You cannot copy data from the computer to the USB storage devices. However, you can access data on the USB storage devices.

- **No Access**: You cannot access the USB storage devices from the computer.

To configure the Smart USB Protection function:

1. Restart the computer. When the logo screen is displayed, press F1 or Fn+F1.
2. Select **Security → Smart USB Protection** and press Enter.
3. Select the desired setting and press Enter.
4. Press F10 or Fn+F10 to save the changes and exit.

Absolute Persistence (for computers purchased outside mainland China)

Absolute Persistence technology is embedded in BIOS. It detects changes that happen on the hardware, software, or the call-in location. It keeps you always knowing what condition the computer is in. To activate the technology, you have to purchase a subscription to Absolute.

UEFI BIOS passwords

You can set passwords in UEFI (Unified Extensible Firmware Interface) BIOS (Basic Input/Output System) to strengthen the security of your computer.

Password types

You can set a power-on password, supervisor password, system management password, or hard disk password in UEFI BIOS to prevent unauthorized access to your computer. However, you are not prompted to enter any UEFI BIOS password when your computer resumes from sleep mode.

- Power-on password

  When a power-on password is set, you are prompted to enter a valid password each time the computer is turned on.

- Supervisor password

  Setting a supervisor password deters unauthorized users from changing configuration settings. If you are responsible for maintaining the configuration settings of several computers, you might want to set a supervisor password.

  When a supervisor password is set, you are prompted to enter a valid password each time you try to enter the BIOS menu.

  If both the power-on password and supervisor password are set, you can enter either password. However, you must use your supervisor password to change any configuration settings.

- Hard disk password

  Setting a hard disk password prevents unauthorized access to the data on the storage drive. When a hard disk password is set, you are prompted to enter a valid password each time you try to access the storage drive.

  Note: After you set a hard disk password, your data on the storage drive is protected even if the storage drive is removed from one computer and installed in another.

- System management password (for selected models)

  You can enable the system management password to have the same authority as the supervisor password to control security related features. To customize the authority of the system management password through the UEFI BIOS menu:

  1. Restart the computer. When the logo screen is displayed, press F1 or Fn+F1.
  2. Select **Security → System Management Password Access Control**.
  3. Follow the on-screen instructions.

If you have set both the supervisor password and the system management password, the supervisor password overrides the system management password.

Set, change, and remove a password

Before you start, print these instructions.

1. Restart the computer. When the logo screen is displayed, press F1 or Fn+F1.
2. Select **Security**.
3. Depending on the password type, select **Set Supervisor Password**, **Set Power-On Password**, **Set System Management Password**, or **Hard Disk Password** and press Enter.
4. Follow the on-screen instructions to set, change, or remove a password.
5. Press F10 or Fn+F10 to save the changes and exit.

You should record your passwords and store them in a safe place. If you forget the passwords, contact a Lenovo-authorized service provider.

Note: If the hard disk password is forgotten, Lenovo cannot remove the password or recover data from the storage drive.

Chapter 4. UEFI BIOS

UEFI BIOS is the first program that the computer runs. When the computer turns on, the UEFI BIOS performs a self test to make sure that various devices in the computer are functioning properly.

Enter the UEFI BIOS menu

Turn on or restart the computer. When the logo screen is displayed, press F1 or Fn+F1 to enter the UEFI BIOS menu.

Note: If you have set UEFI BIOS passwords, enter the correct passwords when prompted. You also can select **No** or press Esc to skip the password prompt and enter the UEFI BIOS menu. However, you cannot change the system configurations that are protected by passwords.

Navigate the UEFI BIOS menu

Follow the on-screen instructions to navigate in the UEFI BIOS menu.

The table below introduces the available settings of the UEFI BIOS menu. You can follow the on-screen instruction to navigate in the UEFI BIOS menu.

Note: The UEFI BIOS menu might vary depending on system configurations.

Menu	Introduction
Main	This category provides the general product-related and firmware information including system summary, machine type, product serial number, UUID number, etc.
Devices	This category introduces how to configure various devices such as USB ports and audio controllers.
Advanced	This category provides advanced information about the computer such as the CPU features.
Power	This category introduces power and thermal management solutions.
Security	This category introduces various passwords, locks, and software to protect your computer.
Startup	This category introduces how to set the boot priority order.
Exit	This category introduces how to exit as you prefer.

You can go to Lenovo BIOS Simulator Center https://download.lenovo.com/bsco/index.html to explore the detailed settings by your product name.

Note: The Lenovo BIOS Simulator Center makes periodic updates of the settings. The UEFI BIOS simulator interface and description of settings might be different from that on your actual user interface.

Update the UEFI BIOS

When you install a new program, device driver, or hardware component, you might need to update the UEFI BIOS.

Download and install the latest UEFI BIOS update package by one of the following methods:

© Copyright Lenovo 2025

Using the built-in software update service

Ubuntu software update will check the LVFS site for any firmware updates and notify you when updates are available.

From the Lenovo Support Web site

Follow the instructions to update the UEFI BIOS from the Lenovo Support Web site.

Step 1. Go to https://pcsupport.lenovo.com and select the entry for your computer.

Step 2. Click **Drivers & Software → Manual Update → BIOS/UEFI**.

Step 3. Follow the on-screen instructions to download and install the latest UEFI BIOS update package.

Chapter 5. CRU replacement

Learn about how to remove or install the hardware components in your computer.

Before CRU replacement

Before replacing hardware of your computer, read this section first. You will get to know what is CRU, the CRU list, system board connectors, and prerequisites for CRU replacement.

What is CRU

Customer Replaceable Units (CRUs) are parts that can be replaced by the customer. Lenovo computers contain the following types of CRUs:

- **Self-service CRUs:** Refer to parts that can be replaced easily by customer themselves or by trained service technicians at an additional cost.
- **Optional-service CRUs:** Refer to parts that can be replaced by customers with a greater skill level. Trained service technicians can also provide service to replace the parts under the type of warranty designated for the customer's machine.

If you intend on installing the CRU, Lenovo will ship the CRU to you. CRU information and replacement instructions are shipped with your product and are available from Lenovo at any time upon request. You might be required to return the defective part that is replaced by the CRU. When return is required: (1) return instructions, a prepaid shipping label, and a container will be included with the replacement CRU; and (2) you might be charged for the replacement CRU if Lenovo does not receive the defective CRU within thirty (30) days of your receipt of the replacement CRU. For full details, see the Lenovo Limited Warranty documentation at:
https://www.lenovo.com/warranty/llw_02

© Copyright Lenovo 2025

CRU list

Exploded view

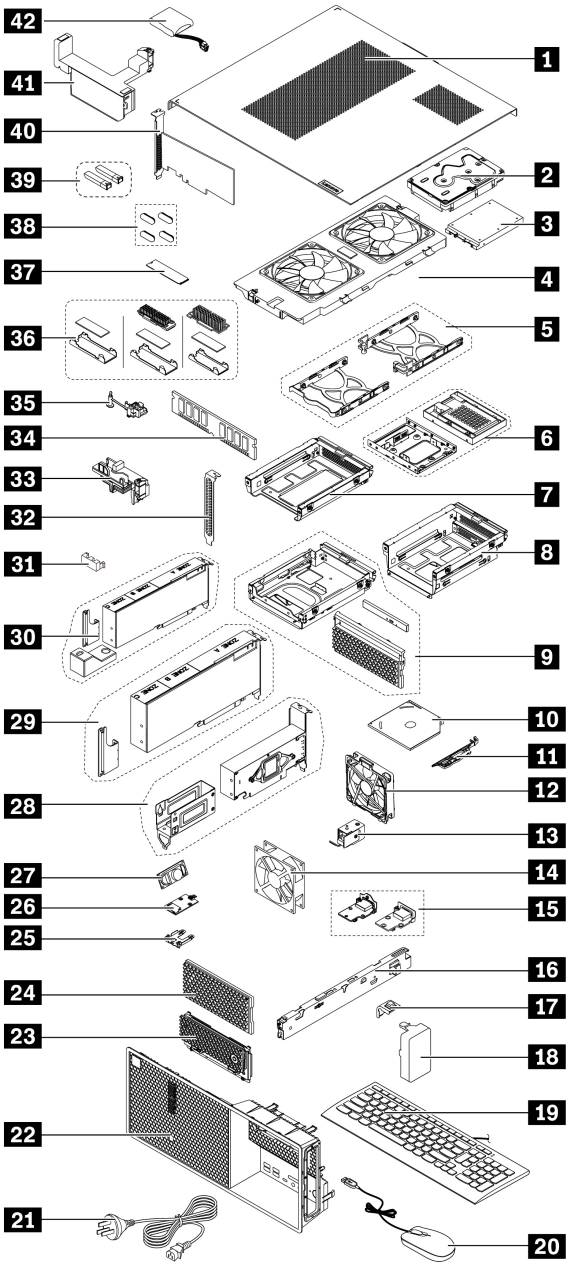

Part list

Self-service CRUs:

- 1 Left side cover
- 2 3.5-inch HDD*
- 3 2.5-inch SSD*
- 4 Side fan with bracket*
- 5 Storage drive tray*
- 6 Storage drive converter*
- 7 Optional storage drive cage*
- 8 Front-access storage enclosure*
- 9 Slim-ODD bezel, cage, and front cover assembly*
- 10 Slim ODD*
- 11 Slim-ODD latch*
- 12 Front fan*
- 14 Rear fan*
- 16 Chassis beam
- 17 Cover presence switch*
- 18 Wi-fi antenna cover
- 19 Keyboard*
- 20 Mouse*
- 21 Power cord
- 22 Front bezel
- 23 Front-access storage enclosure bezel*
- 24 Front-access storage enclosure dummy bezel*
- 31 Smart cable clip*
- 32 PCIe card bracket*
- 34 Memory module
- 36 On-board M.2 SSD bracket, heat sink, and thermal pad*
- 37 M.2 SSD*
- 38 Chassis rubber feet

Optional-service CRU:

- 13 E-lock*
- 15 Flexible I/O port card with bracket*
- 25 3-in-1 card reader bracket*
- 26 3-in-1 card reader*
- 27 Internal speaker
- 28 29 Graphics card and extender*
- 30 Graphics card, extender, and holder*
- 33 Graphics card retainer*
- 35 On-board M.2 SSD holder*
- 39 Fiber modules of Ethernet PCIe adapter card*
- 40 PCIe adapter card*
- 41 Broadcom 940-8i RAID card battery box*
- 42 Broadcom 940-8i RAID card battery*

System board illustration

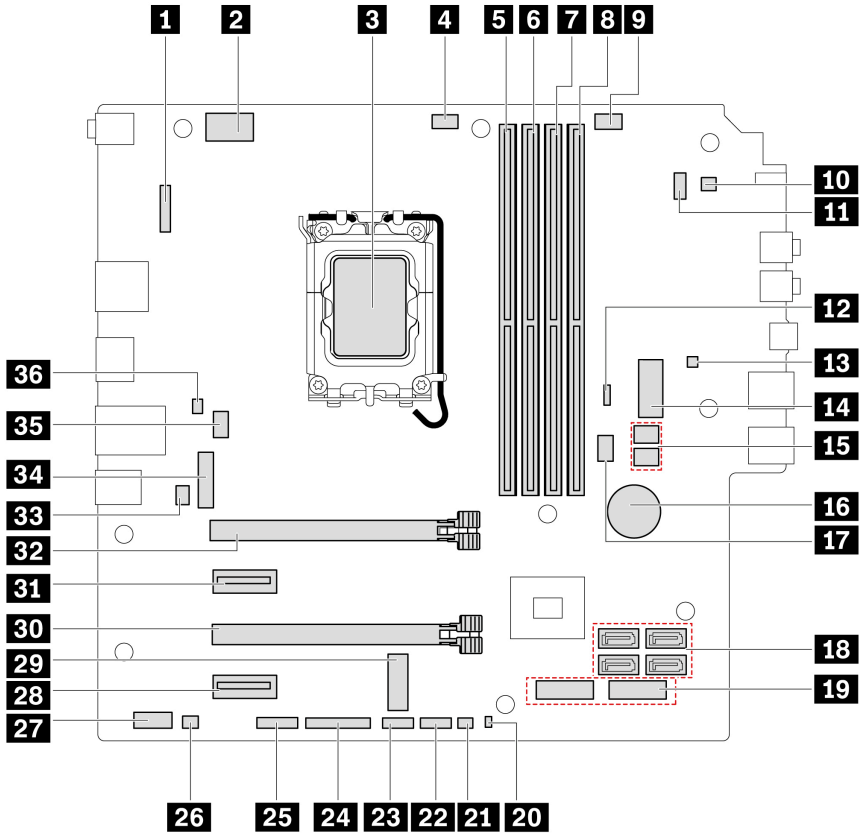

Item	Item
1 Flexible I/O port card connector	2 8-pin microprocessor power connector
3 Microprocessor socket	4 Microprocessor fan connector
5 Memory slot (DIMM1)	6 Memory slot (DIMM2)
7 Memory slot (DIMM3)	8 Memory slot (DIMM4)
9 Auxiliary fan connector 2 (side fan)	10 Internal speaker connector
11 Power button and power indicator connector	12 Clear CMOS (Complementary Metal Oxide Semiconductor)/Recovery jumper
13 ThinkStation LED connector	14 10-pin system board power connector
15 SATA power connectors	16 Coin-cell battery
17 Auxiliary fan connector 1 (front fan)	18 SATA connectors
19 M.2 SSD slots (Gen 4)	20 Management engine (ME) disabling connector
21 Thermal sensor connector	22 Front USB connector 1
23 Front USB connector 2	24 Line printer terminal (LPT) header
25 Serial (COM) connector	26 Thunderbolt connector 2
27 Thunderbolt connector 1	28 PCIe x1 Gen 3 slot
29 Wi-Fi card slot	30 PCIe x4 Gen 4 slot (physical link width x16 and negotiable link width x4)

Item	Item
31 PCIe x1 Gen 3 slot	32 PCIe x16 Gen 5 slot
33 E-lock connector	34 M.2 SSD slot (Gen 5)
35 System fan connector (rear fan)	36 Cover presence switch connector

Clear CMOS position

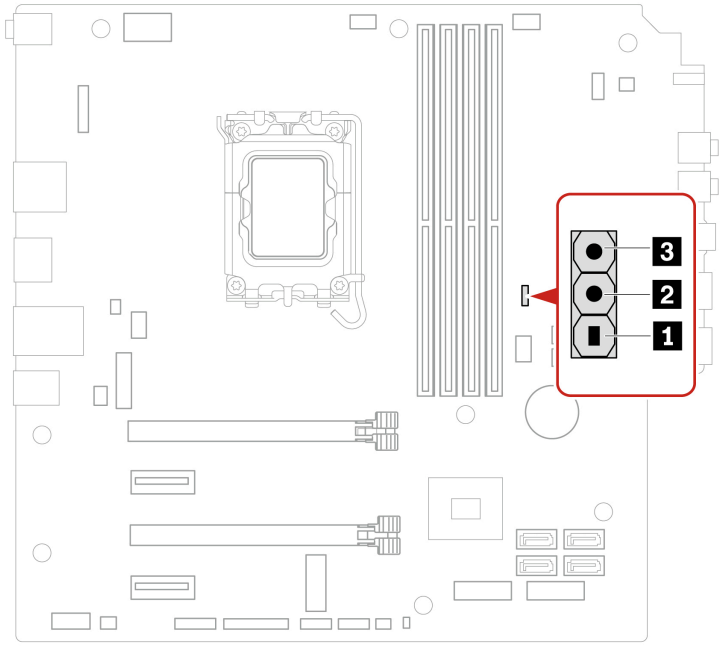

Item	Description	Item	Description
1 and 2	Standard position	2 and 3	Clear CMOS position

Prerequisites for hardware replacement

General prerequisites

Read *Generic Safety and Compliance Notices*.

Prerequisites for opening left side cover of the computer

-

  During operation, some components become hot enough to burn the skin. Before you open the computer cover, remove any media from the drives, turn off the computer and connected devices, disconnect power, remove all cables and locking devices, and wait approximately 10 minutes until the computer is cool.
- Unlock any locking device that secures the computer.

- Lay down the computer to place the left side cover facing up.
- Before reaching parts with cables, record the cable routing for future reference and then disconnect its cable from the system board.

Prerequisites for replacing storage drives

Attention: The internal storage drives are sensitive. Inappropriate handling might cause damage and loss of data. When handling the internal storage drives observe the following guidelines:

- Replace the internal storage drives only for repair. The internal storage drive is not designed for frequent changes or replacement.
- Before replacing the internal storage drives, make backup copy of all the data that you want to keep and safely eject the old storage drives from the operating system. For more information, see the operating system help system.
- Do not touch the contact edge of the internal storage drives. Otherwise, the internal storage drives might get damaged.
- Do not apply pressure to the internal storage drives.
- Do not make the internal storage drives subject to physical shocks or vibration. Put the internal storage drives on soft material, such as a cloth, to absorb physical shocks.

Prerequisites for replacing hot-swappable storage drives in the front-access storage enclosure

The storage drive in the front-access storage enclosure can be hot-swappable when certain requirements are met. It means that you can open the front-access storage enclosure bezel to install or replace the drive inside without even turning off your computer. Therefore, lock the enclosure cover to prevent any unexpected removal or data loss. The keys are attached at the rear panel of the computer. Store the keys in a secure place.

Attention: The storage drive in the front-access storage enclosure is hot-swappable only when the following requirements are met. If any of the requirements are not met, do not install or replace the storage drive when the computer is turned on. Otherwise, data on the storage drive might get damaged.

- The eSATA mode of the SATA 4 connector is enabled in BIOS by doing the following:
  1. Restart the computer. When the logo screen is displayed, press F1 or Fn+F1.
  2. Select **Devices → Storage Setup → SATA Drive 4 Hot-Plug Support** and press Enter.
  3. Select **Enabled** and press Enter.
  4. Press F10 or Fn+F10 to save the changes and exit.
- The SATA cable of the front-access storage enclosure is connected to the SATA 4 connector on the system board.
- The operating system of your computer does not reside on the storage drive in the front-access storage enclosure.

Prerequisites for replacing power supply assembly

Although there are no moving parts in the computer after the power cord has been disconnected, the following warnings are required for your safety.



Keep fingers and other parts of your body away from hazardous, moving parts. If you suffer an injury, seek medical care immediately. Never remove the cover on a power supply or any part that has the following label attached.



Hazardous voltage, current, and energy levels are present inside any component that has this label attached. There are no serviceable parts inside these components. If you suspect a problem with one of these parts, contact a service technician.

Left side cover

Prerequisite

Before you start, ensure that you have read the relevant sections in Prerequisites for hardware replacement, which includes:

- General prerequisites
- Prerequisites for opening left side cover of the computer
- Prerequisites for replacing storage drives
- Prerequisites for replacing hot-swappable storage drives in the front-access storage enclosure
- Prerequisites for replacing power supply assembly

Removal steps

Remove the left side cover.

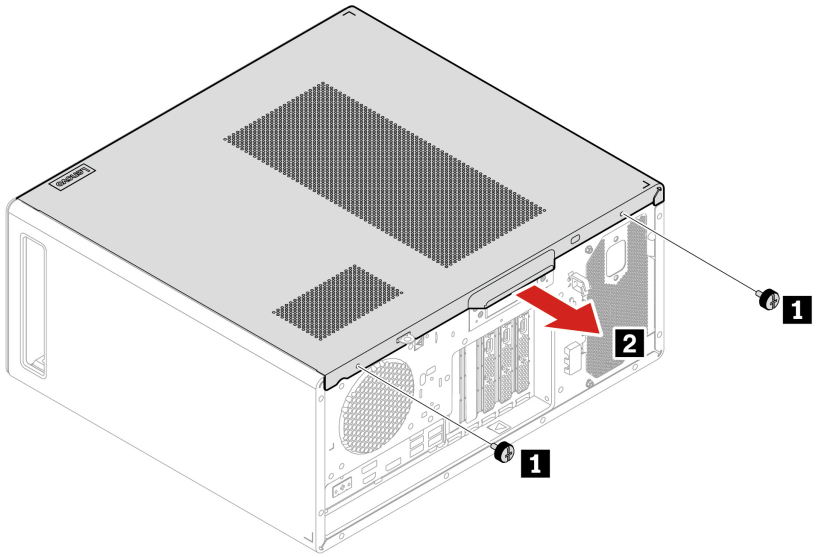

Step	Screw (quantity)	Torque
1	#6-32 × 7.5 mm (0.3 inches), Nickel coated (2)	0.34 ± 0.06 Nm (3.46 ± 0.58 kgf-cm)

Installation notice

If a locking device is available, use it to lock the computer after installing the left side cover.

Slim-ODD-relevant parts

By reading this section, you will learn to replace slim-ODD relevant parts, including slim ODD, slim-ODD latch, and slim-ODD cage, bezel, and front cover assembly.

Slim ODD

Prerequisite

Before you start, ensure that you have read the relevant sections in Prerequisites for hardware replacement, which includes:

- General prerequisites
- Prerequisites for opening left side cover of the computer
- Prerequisites for replacing storage drives
- Prerequisites for replacing hot-swappable storage drives in the front-access storage enclosure
- Prerequisites for replacing power supply assembly

Removal steps

1. Remove the “Left side cover” on page 32.
2. Remove the slim ODD.

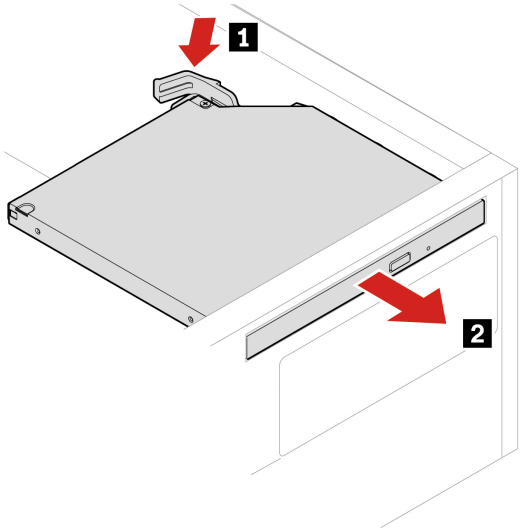

Slim-ODD latch

Prerequisite

Before you start, ensure that you have read the relevant sections in Prerequisites for hardware replacement, which includes:

- General prerequisites
- Prerequisites for opening left side cover of the computer

- Prerequisites for replacing storage drives
- Prerequisites for replacing hot-swappable storage drives in the front-access storage enclosure
- Prerequisites for replacing power supply assembly

Removal steps

1. Remove the following parts:
   a. “Left side cover” on page 32
   b. “Slim ODD” on page 33
2. Remove the slim-ODD latch.

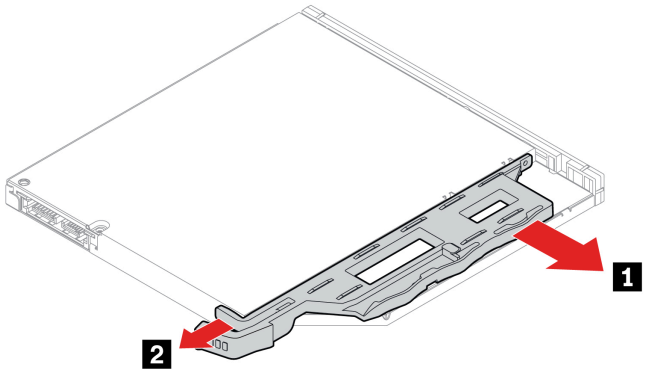

Slim-ODD bezel

Prerequisite

Before you start, ensure that you have read the relevant sections in Prerequisites for hardware replacement, which includes:

- General prerequisites
- Prerequisites for opening left side cover of the computer
- Prerequisites for replacing storage drives
- Prerequisites for replacing hot-swappable storage drives in the front-access storage enclosure
- Prerequisites for replacing power supply assembly

Removal steps

1. Remove the following parts:
   a. “Left side cover” on page 32
   b. “Slim ODD” on page 33
2. Remove the slim-ODD bezel.

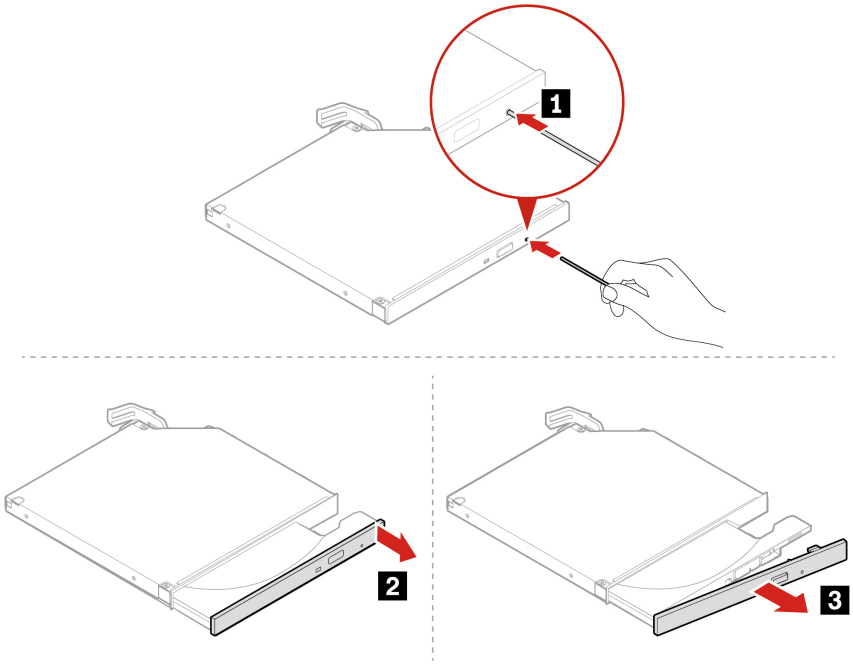

Slim-ODD cage

Prerequisite

Before you start, ensure that you have read the relevant sections in Prerequisites for hardware replacement, which includes:

- General prerequisites
- Prerequisites for opening left side cover of the computer
- Prerequisites for replacing storage drives
- Prerequisites for replacing hot-swappable storage drives in the front-access storage enclosure
- Prerequisites for replacing power supply assembly

Removal steps

1. Remove the following parts:
   a. “Left side cover” on page 32
   b. “Slim ODD” on page 33
2. Remove the slim-ODD cage.

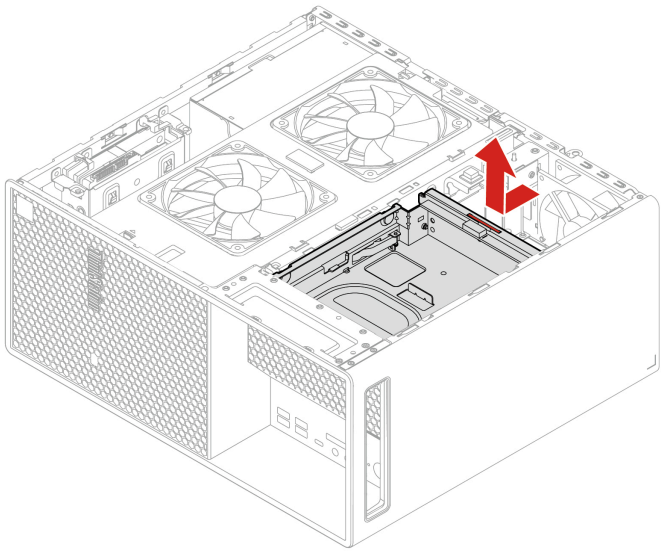

Slim-ODD front cover

Prerequisite

Before you start, ensure that you have read the relevant sections in Prerequisites for hardware replacement, which includes:

- General prerequisites
- Prerequisites for opening left side cover of the computer
- Prerequisites for replacing storage drives
- Prerequisites for replacing hot-swappable storage drives in the front-access storage enclosure
- Prerequisites for replacing power supply assembly

Removal steps

1. Remove the following parts:
   a. “Left side cover” on page 32
   b. “Slim ODD” on page 33
   c. “Front bezel” on page 55
2. Remove the slim-ODD front cover.

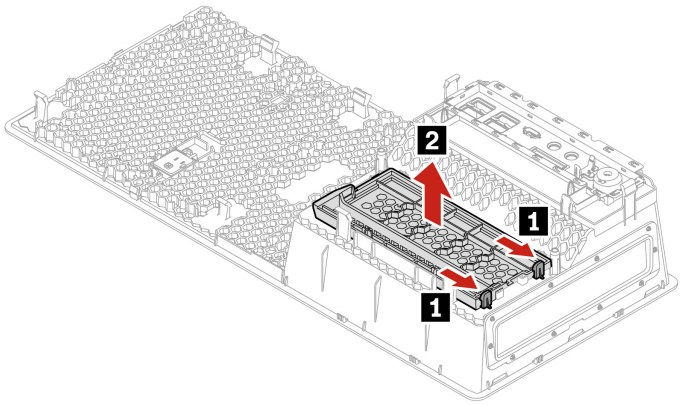

Storage

By reading this section, you will learn to replace storage drives, storage drive cages, and front-access storage enclosure in your computer.

Storage drives in the internal storage drive cages

Prerequisite

Before you start, ensure that you have read the relevant sections in Prerequisites for hardware replacement, which includes:

- General prerequisites
- Prerequisites for opening left side cover of the computer
- Prerequisites for replacing storage drives
- Prerequisites for replacing hot-swappable storage drives in the front-access storage enclosure
- Prerequisites for replacing power supply assembly

Removal steps of the 3.5-inch HDD

1. Remove the “Left side cover” on page 32.
2. Remove the 3.5-inch HDD with tray from the internal storage drive cage.

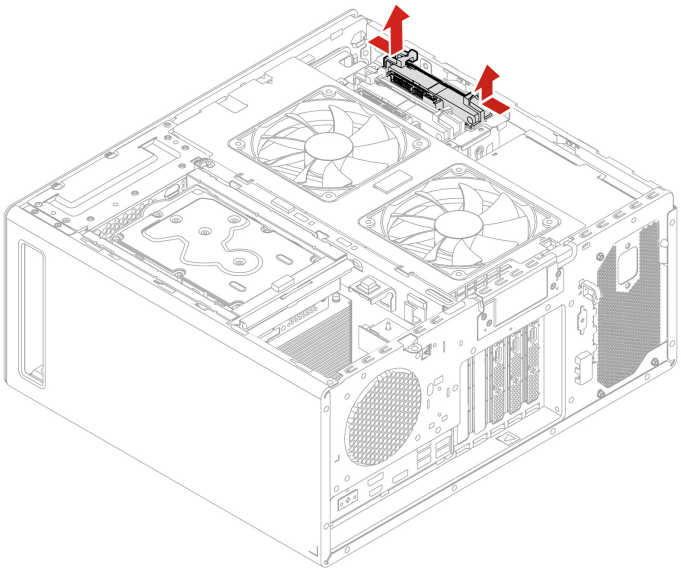

3. Remove the 3.5-inch HDD from the tray.

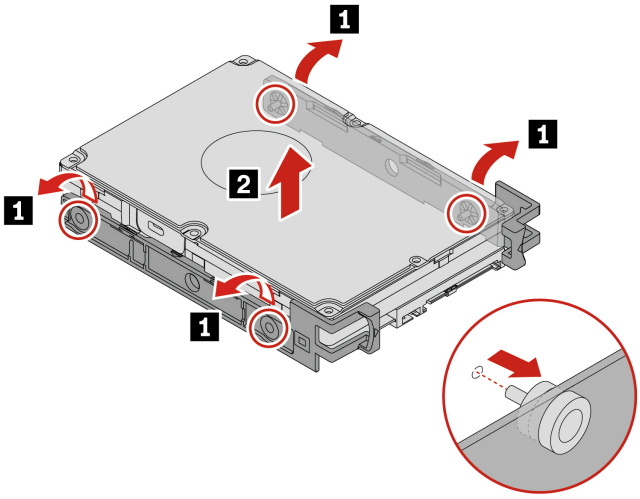

Removal steps of the 2.5-inch SSD

1. Remove the “Left side cover” on page 32.
2. Remove the 2.5-inch SSD with tray from the internal storage drive cage.

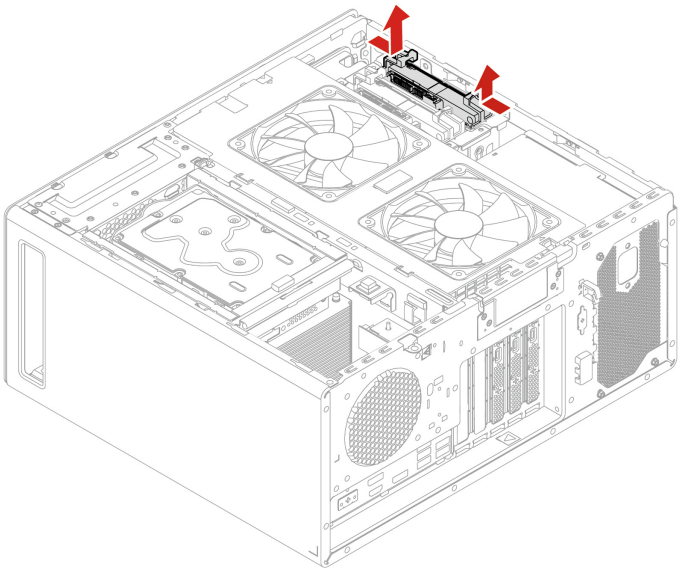

3. Remove the 2.5-inch SSD with storage drive converter from the tray.

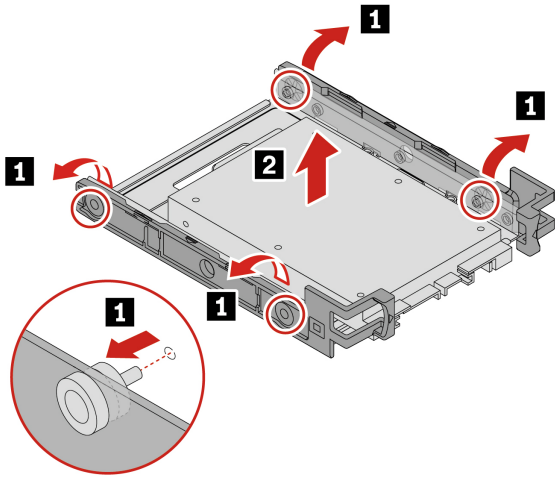

4. Remove the 2.5-inch SSD from the storage drive converter.

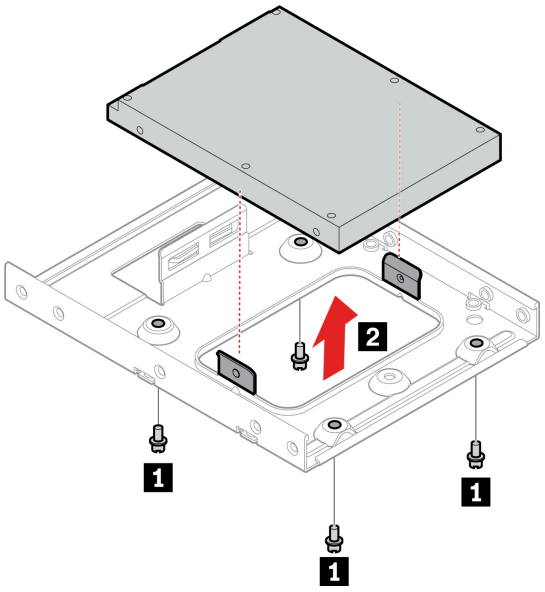

Step	Screw (quantity)	Torque
1	#6-32 × 5 mm (0.2 inches), Nickel coated (4)	0.56 ± 0.05 Nm (5.75 ± 0.57 kgf-cm)

Optional storage drive cage

Prerequisite

Before you start, ensure that you have read the relevant sections in Prerequisites for hardware replacement, which includes:

- General prerequisites
- Prerequisites for opening left side cover of the computer
- Prerequisites for replacing storage drives
- Prerequisites for replacing hot-swappable storage drives in the front-access storage enclosure
- Prerequisites for replacing power supply assembly

Removal steps

1. Remove the “Left side cover” on page 32.
2. Remove the optional storage drive cage.

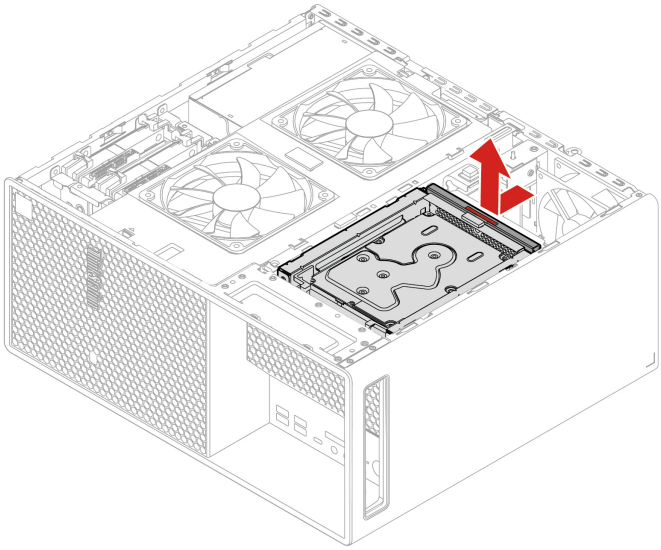

Storage drive in the optional storage drive cage

Prerequisite

Before you start, ensure that you have read the relevant sections in Prerequisites for hardware replacement, which includes:

- General prerequisites
- Prerequisites for opening left side cover of the computer
- Prerequisites for replacing storage drives
- Prerequisites for replacing hot-swappable storage drives in the front-access storage enclosure
- Prerequisites for replacing power supply assembly

Removal steps of the 3.5-inch HDD

1. Remove the following parts:
   a. “Left side cover” on page 32
   b. “Optional storage drive cage” on page 40
2. Remove 3.5-inch HDD with tray from the optional storage drive cage.

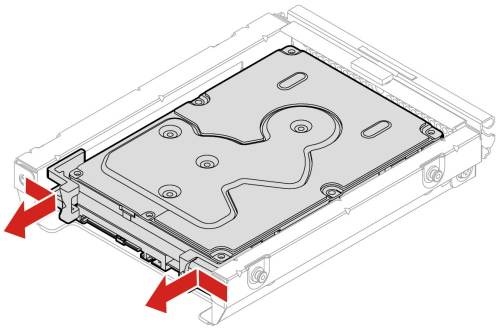

3. Remove the 3.5-inch HDD from the tray.

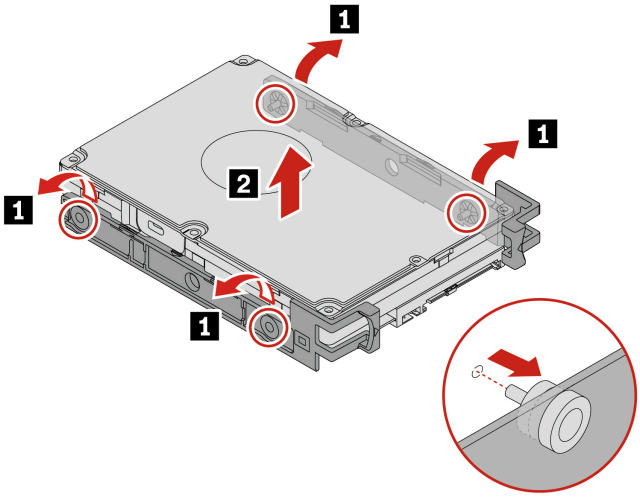

Removal steps of the 2.5-inch SSD

1. Remove the following parts:
   a. “Left side cover” on page 32
   b. “Optional storage drive cage” on page 40
2. Remove the 2.5-inch SSD with tray from the optional storage drive cage.

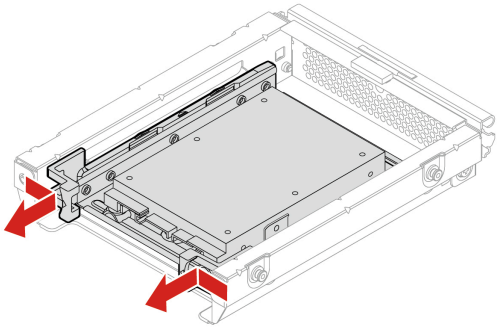

3. Remove the 2.5-inch SSD with storage drive converter from the tray.

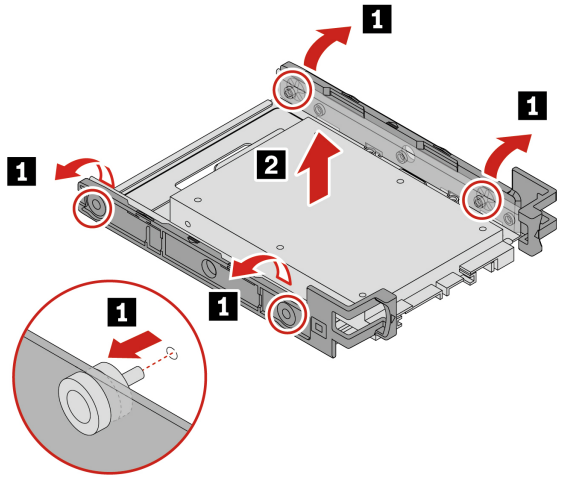

4. Remove the 2.5-inch SSD from the storage drive converter.

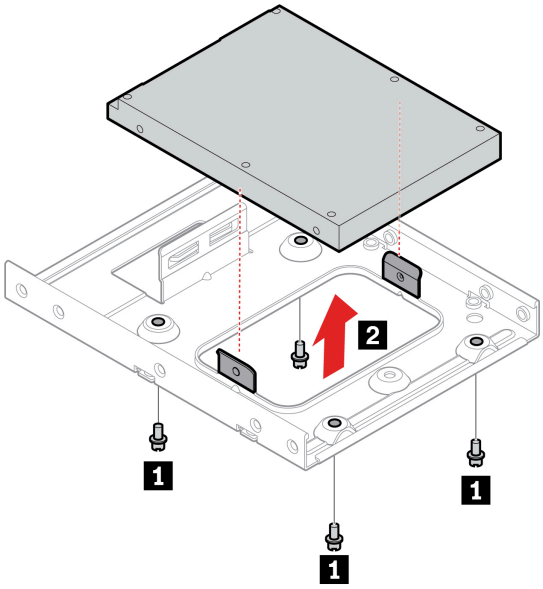

Step	Screw (quantity)	Torque
1	#6-32 × 5 mm (0.2 inches), Nickel coated (4)	0.56 ± 0.05 Nm (5.75 ± 0.57 kgf-cm)

Storage drive in the front-access storage enclosure

Prerequisite

Before you start, ensure that you have read the relevant sections in Prerequisites for hardware replacement, which includes:

- General prerequisites
- Prerequisites for opening left side cover of the computer

- Prerequisites for replacing storage drives
- Prerequisites for replacing hot-swappable storage drives in the front-access storage enclosure
- Prerequisites for replacing power supply assembly

Removal steps of the 3.5-inch HDD

1. Find the key to the front-access storage enclosure attached at the rear panel of the computer.

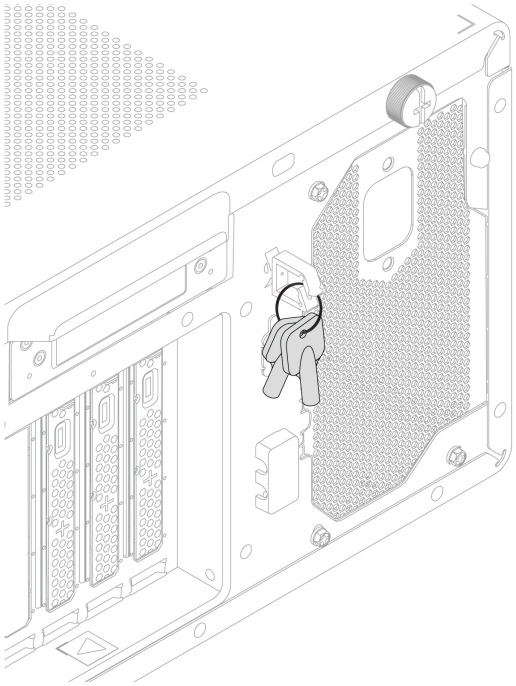

2. Open the front-access storage enclosure bezel.

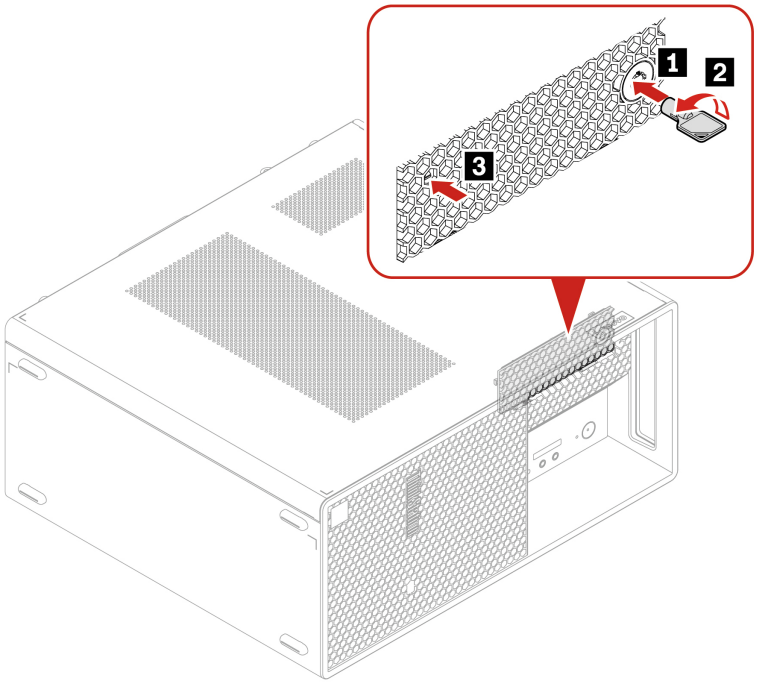

3. Pull the 3.5-inch HDD with tray out of the front-access storage enclosure.

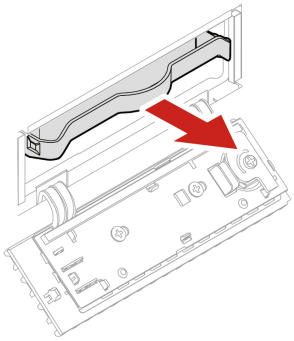

4. Remove the 3.5-inch HDD from the tray.

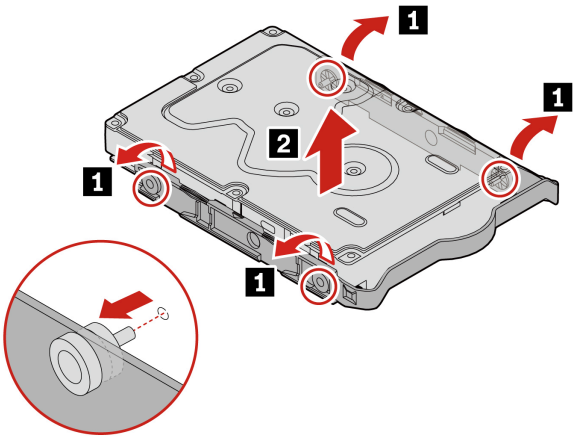

Removal steps of the 2.5-inch SSD

1. Find the key to the front-access storage enclosure attached at the rear panel of the computer.

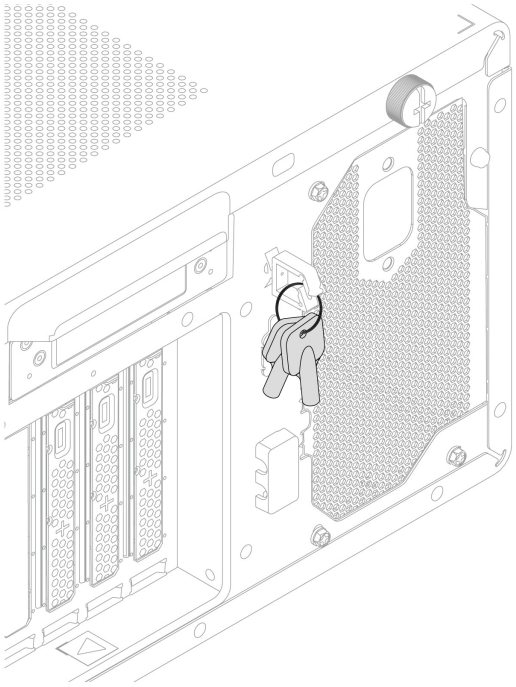

2. Open the front-access storage enclosure bezel.

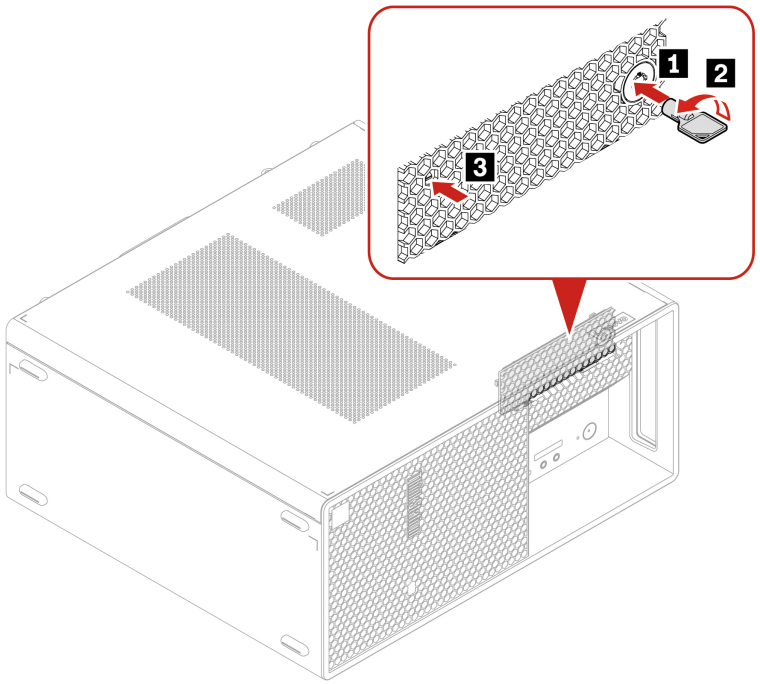

3. Pull the 2.5-inch SSD with tray out of the front-access storage enclosure.

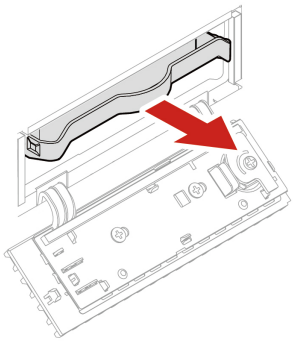

4. Remove the 2.5-inch SSD with storage drive converter from the tray.

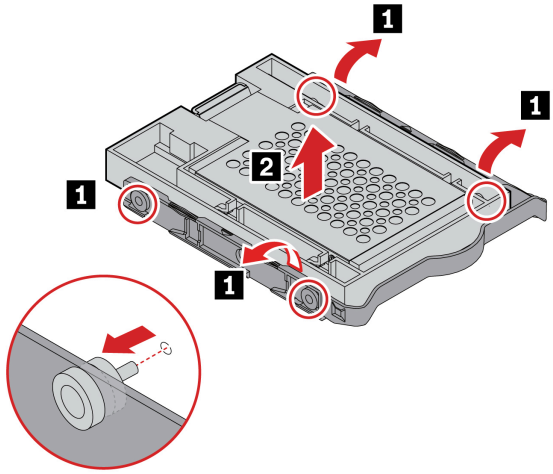

5. Remove the 2.5-inch SSD adapter from the storage drive converter.

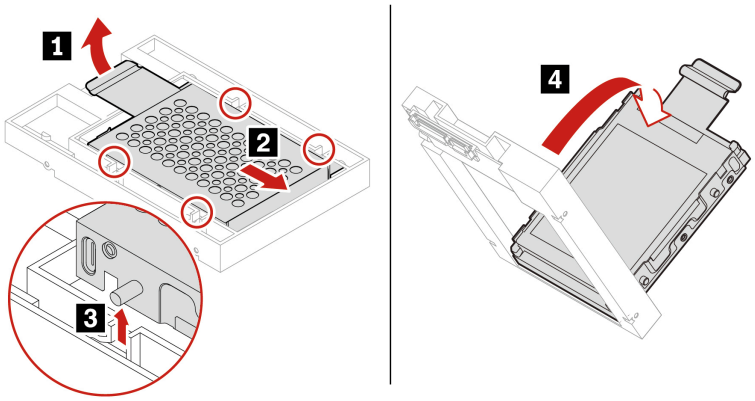

6. Remove the 2.5-inch SSD from the adapter.

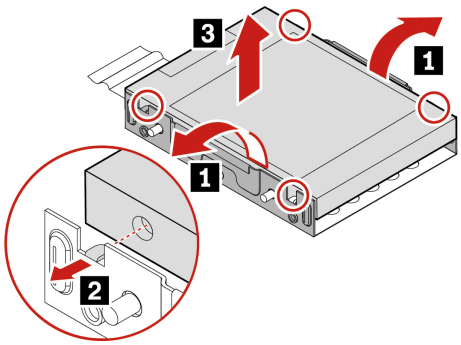

Front-access storage enclosure

Prerequisite

Before you start, ensure that you have read the relevant sections in Prerequisites for hardware replacement, which includes:

- General prerequisites
- Prerequisites for opening left side cover of the computer
- Prerequisites for replacing storage drives
- Prerequisites for replacing hot-swappable storage drives in the front-access storage enclosure
- Prerequisites for replacing power supply assembly

Removal steps

1. Remove the following parts:
   a. “Left side cover” on page 32
   b. “Storage drive in the front-access storage enclosure” on page 43
2. Remove the front-access storage enclosure.

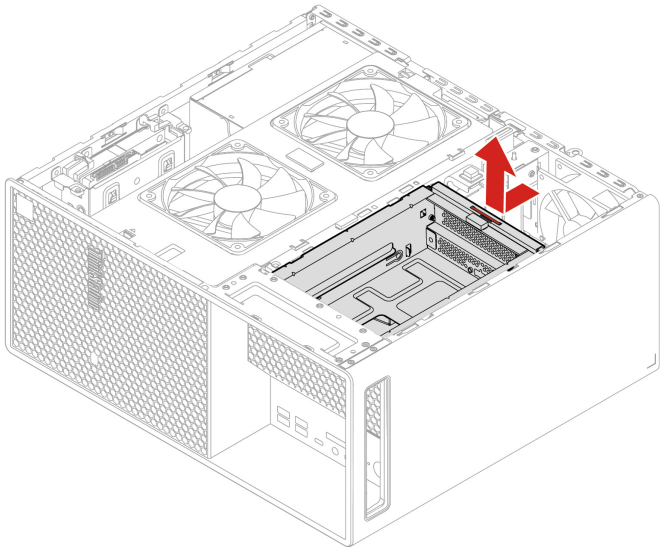

On-board M.2 SSD and heat sink

Prerequisite

Before you start, ensure that you have read the relevant sections in Prerequisites for hardware replacement, which includes:

- General prerequisites
- Prerequisites for opening left side cover of the computer
- Prerequisites for replacing storage drives
- Prerequisites for replacing hot-swappable storage drives in the front-access storage enclosure
- Prerequisites for replacing power supply assembly

Removal steps

1. Remove the “Left side cover” on page 32.
2. Remove the on-board M.2 SSD and the heat sink.

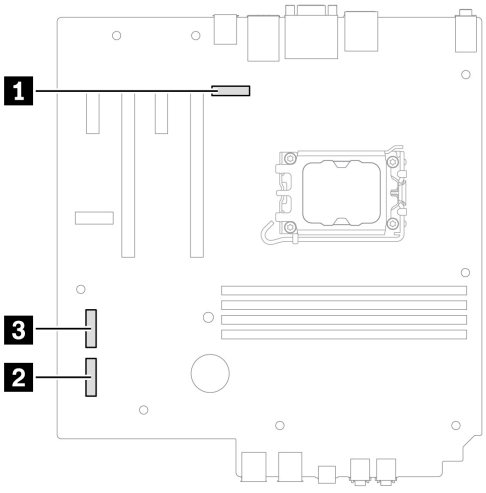

- From the slot 1:

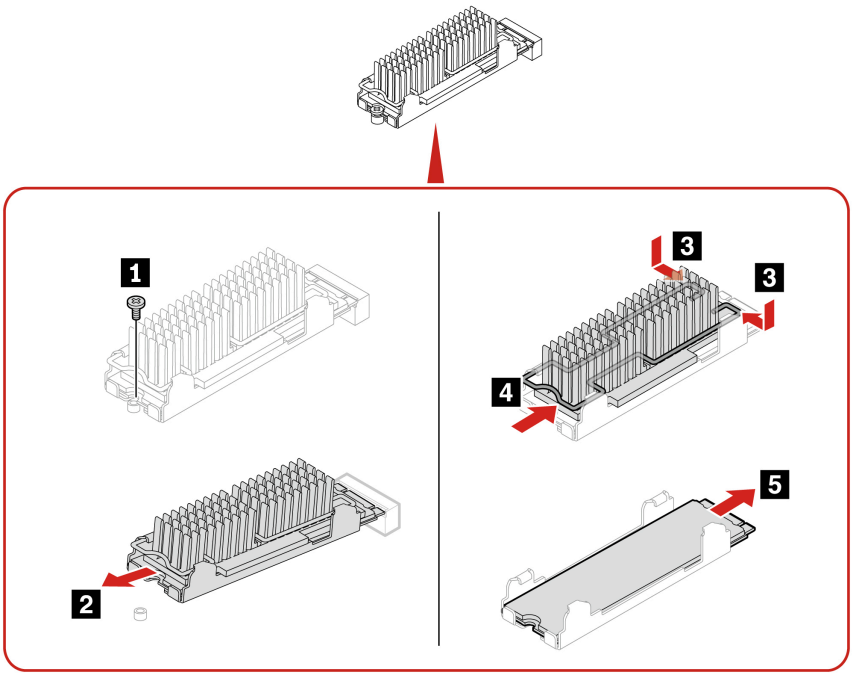

- From the slot 2 or the slot 3:
  - Type 1

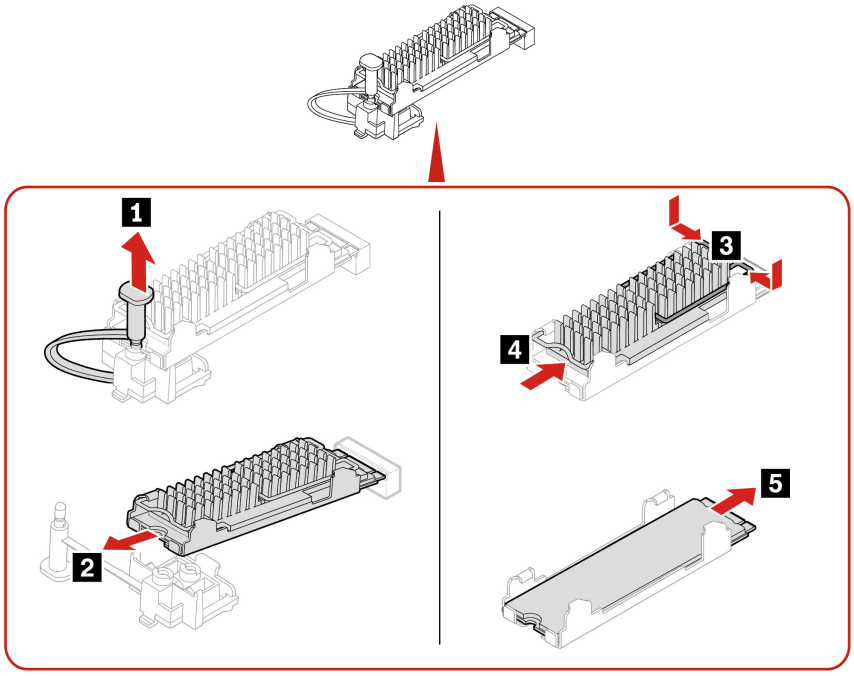

  - Type 2

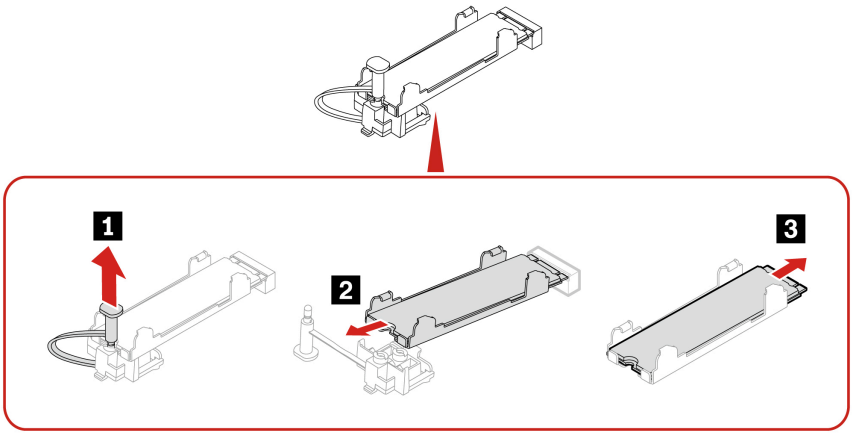

On-board M.2 SSD holder

Prerequisite

Before you start, ensure that you have read the relevant sections in Prerequisites for hardware replacement, which includes:

- General prerequisites
- Prerequisites for opening left side cover of the computer
- Prerequisites for replacing storage drives
- Prerequisites for replacing hot-swappable storage drives in the front-access storage enclosure
- Prerequisites for replacing power supply assembly

Removal steps

1. Remove the following parts:
   a. “Left side cover” on page 32
   b. “On-board M.2 SSD and heat sink” on page 49
2. Remove the M.2 SSD holder.

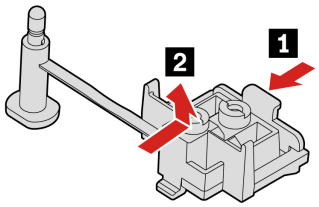

M.2 SSD and heat sink in an M.2 SSD PCIe adapter card

Prerequisite

Before you start, ensure that you have read the relevant sections in Prerequisites for hardware replacement, which includes:

- General prerequisites
- Prerequisites for opening left side cover of the computer

- Prerequisites for replacing storage drives
- Prerequisites for replacing hot-swappable storage drives in the front-access storage enclosure
- Prerequisites for replacing power supply assembly

Replacement steps

1. Remove the “Left side cover” on page 32.
2. Locate and remove the M.2 SSD PCIe adapter card from the PCIe slot. See “PCIe cards” on page 58.
3. Replace the heat sink.

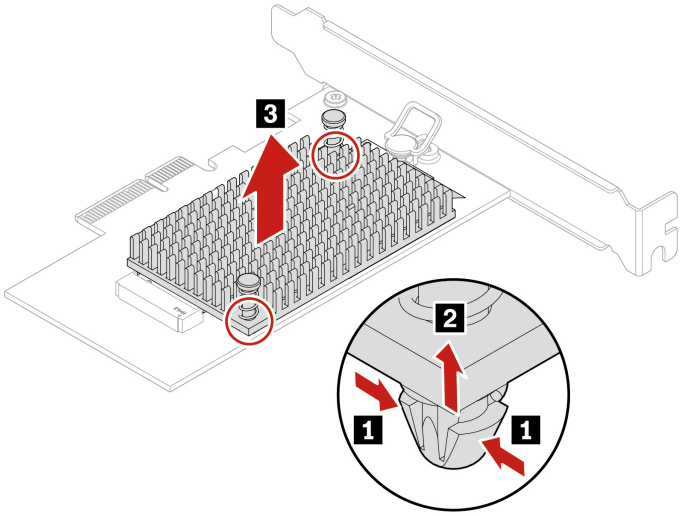

4. Remove the M.2 SSD.

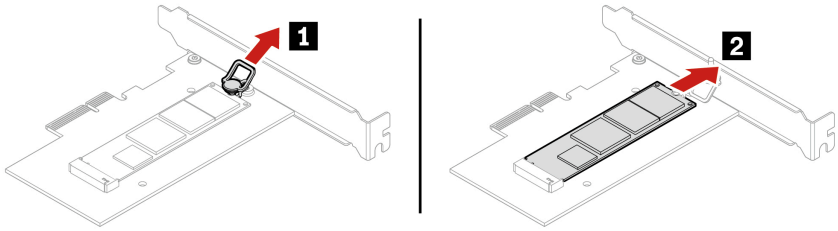

Installation steps

1. Install the thermal pad.

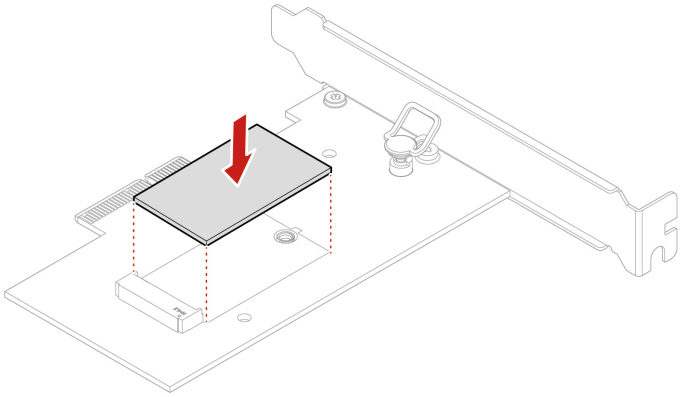

2. Install the M.2 SSD.

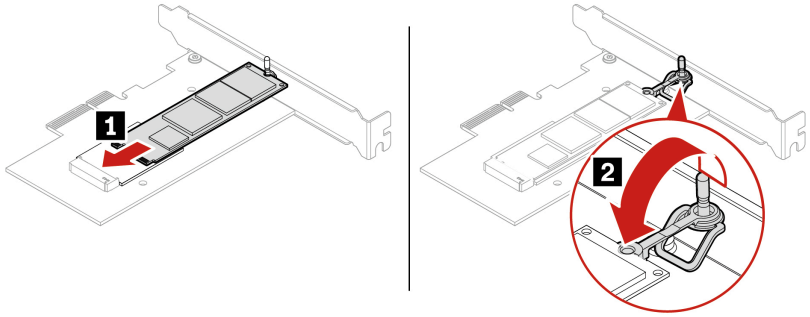

3. Install the heat sink.

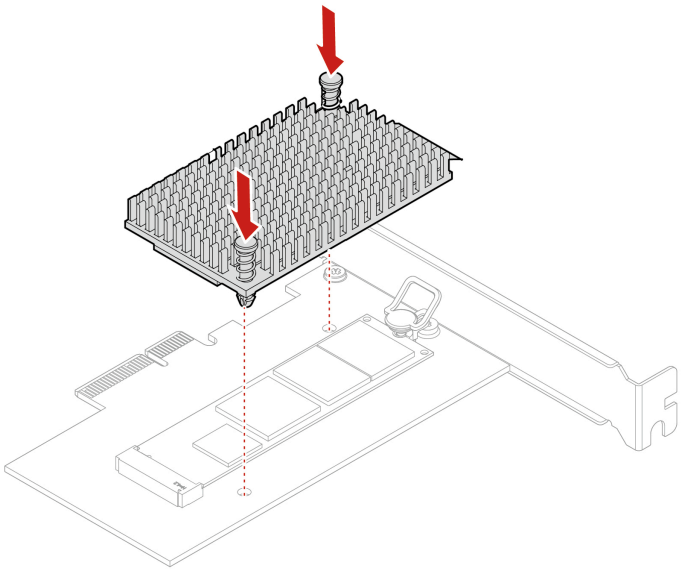

Side fan with bracket

Prerequisite

Before you start, ensure that you have read the relevant sections in Prerequisites for hardware replacement, which includes:

- General prerequisites
- Prerequisites for opening left side cover of the computer
- Prerequisites for replacing storage drives
- Prerequisites for replacing hot-swappable storage drives in the front-access storage enclosure
- Prerequisites for replacing power supply assembly

Removal steps

1. Remove the “Left side cover” on page 32.
2. Remove the side fan with bracket.

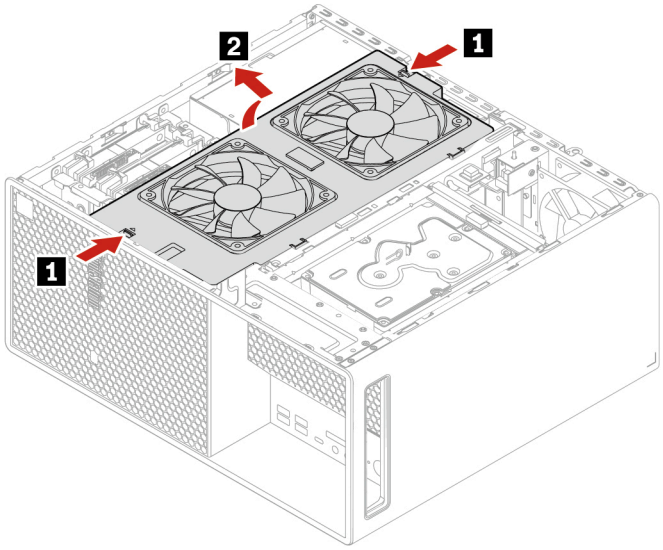

Front fan

Prerequisite

Before you start, ensure that you have read the relevant sections in Prerequisites for hardware replacement, which includes:

- General prerequisites
- Prerequisites for opening left side cover of the computer
- Prerequisites for replacing storage drives
- Prerequisites for replacing hot-swappable storage drives in the front-access storage enclosure
- Prerequisites for replacing power supply assembly

Removal steps

1. Remove the following parts:
   a. “Left side cover” on page 32
   b. “Side fan with bracket” on page 54
2. Remove the front fan.

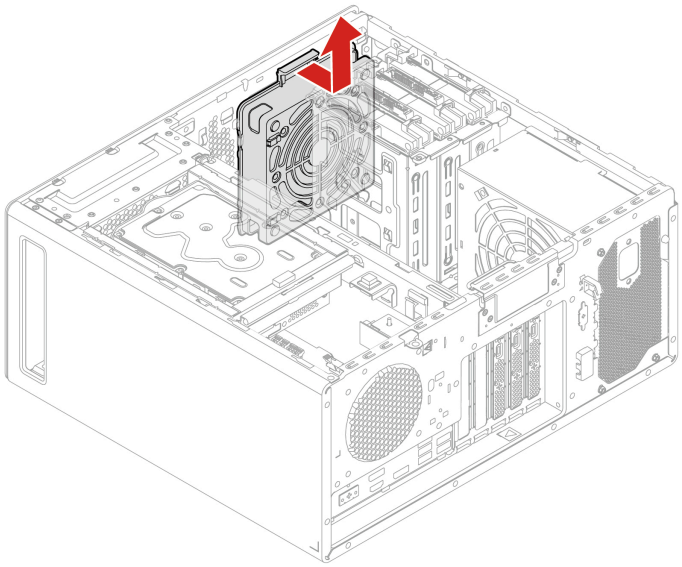

Front bezel

Prerequisite

Before you start, ensure that you have read the relevant sections in Prerequisites for hardware replacement, which includes:

- General prerequisites
- Prerequisites for opening left side cover of the computer
- Prerequisites for replacing storage drives
- Prerequisites for replacing hot-swappable storage drives in the front-access storage enclosure
- Prerequisites for replacing power supply assembly

Removal steps

1. Remove the following parts, if any:
   a. “Left side cover” on page 32
   b. “Slim-ODD-relevant parts” on page 33
   c. “Optional storage drive cage” on page 40
   d. “Storage drive in the front-access storage enclosure” on page 43
   e. “Front-access storage enclosure” on page 48
   f. “Side fan with bracket” on page 54
   g. “Front fan” on page 54

2. Press and push the hooks.

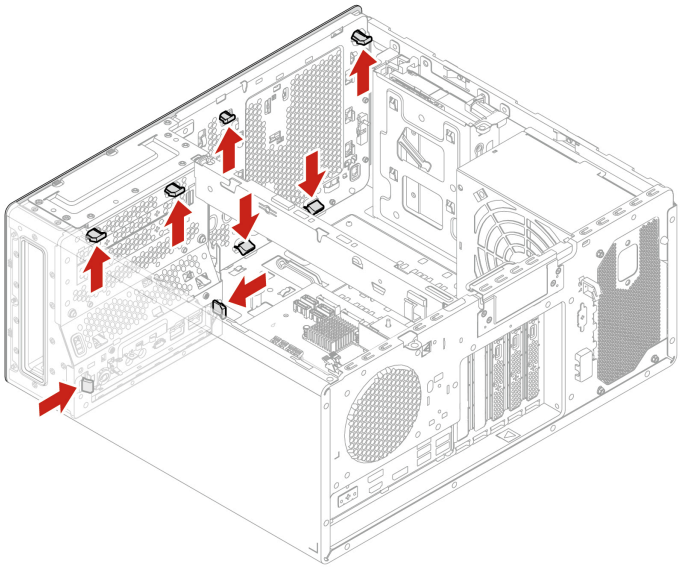

3. Remove the front bezel.

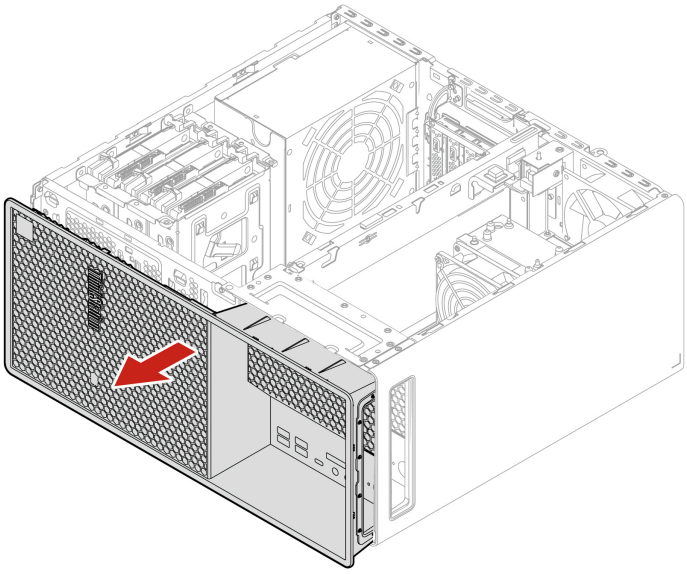

3-in-1 card reader

Prerequisite

Before you start, ensure that you have read the relevant sections in Prerequisites for hardware replacement, which includes:

- General prerequisites
- Prerequisites for opening left side cover of the computer
- Prerequisites for replacing storage drives
- Prerequisites for replacing hot-swappable storage drives in the front-access storage enclosure
- Prerequisites for replacing power supply assembly

Removal steps

1. Remove the following parts, if any:
   a. “Left side cover” on page 32
   b. “Slim-ODD-relevant parts” on page 33
   c. “Optional storage drive cage” on page 40
   d. “Storage drive in the front-access storage enclosure” on page 43
   e. “Front-access storage enclosure” on page 48
2. Remove the 3-in-1 card reader.

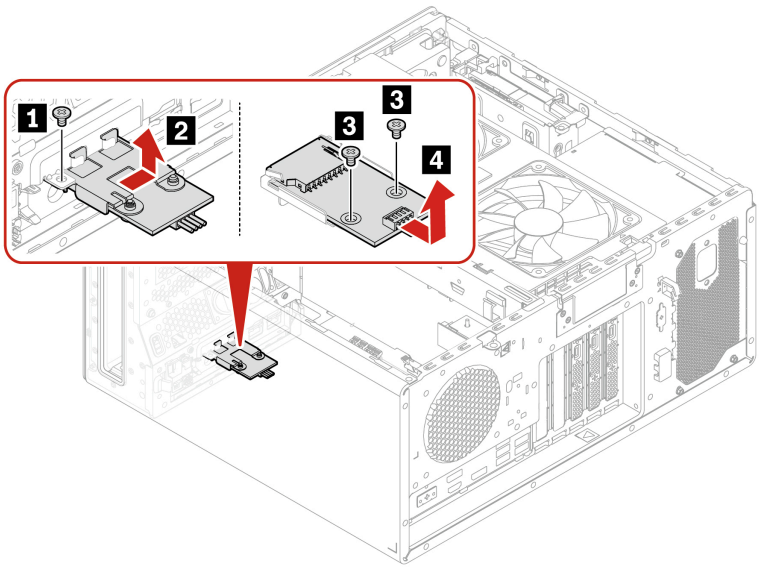

Step	Screw (quantity)	Torque
1	#6-32 × 5 mm (0.2 inches), Nickel coated (1)	0.56 ± 0.05 Nm (5.75 ± 0.57 kgf-cm)
3	M3 × 5 mm (0.2 inches), Zn coated (2)	0.56 ± 0.05 Nm (5.75 ± 0.57 kgf-cm)

PCIe cards

By reading this section, you will learn to replace PCIe cards in your computer, including graphics cards, M.2 SSD PCIe adapter cards, Broadcom 940-8i RAID card, and other kinds of PCIe adapter cards.

Note: The illustrations in this section highlight the replacement steps. The PCIe cards and related parts may look different from how they appear in your computer.

PCIe card replacement rule

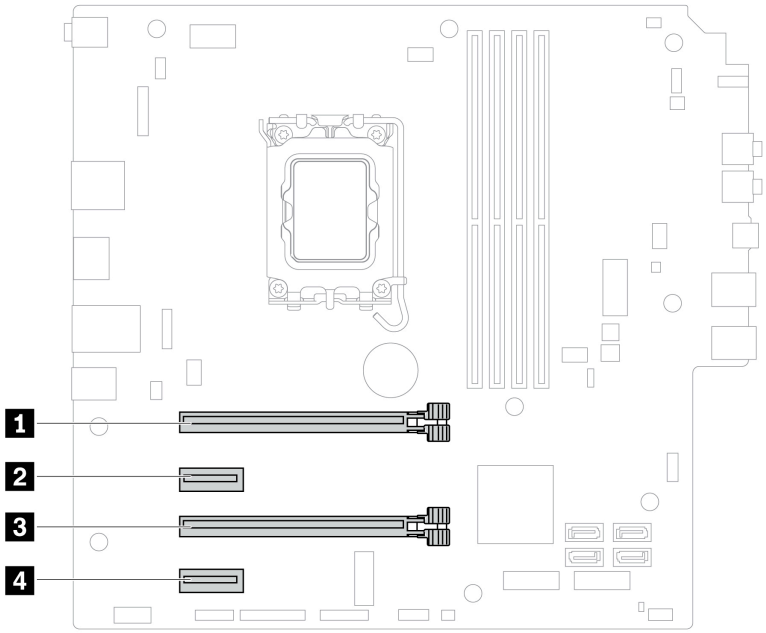

- If there is only one graphics card, install it in the slot 1.
- When there are two graphics cards,
  - the two graphics cards should be the same.
  - install the graphics cards in the slot 1 first and then in the slot 3.
  - remove the graphics cards from the slot 3 first and then from the slot 1 .
- Install the following PCIe cards in the slot 3, if any:
  - Broadcom 940-8i RAID card
  - M.2 SSD PCIe adapter card
  - Rear USB-C connector (USB 20 Gbps) PCIe adapter card
- Before installing a PCIe card, you need to remove “PCIe card bracket” on page 59.

PCIe card bracket

Note: Some computer models might not be shipped with PCIe card. In this case, the PCIe card bracket in the following illustration is removable.

Prerequisite

Before you start, ensure that you have read the relevant sections in Prerequisites for hardware replacement, which includes:

- General prerequisites
- Prerequisites for opening left side cover of the computer
- Prerequisites for replacing storage drives
- Prerequisites for replacing hot-swappable storage drives in the front-access storage enclosure
- Prerequisites for replacing power supply assembly

Removal steps

1. Remove the “Left side cover” on page 32.
2. Remove the PCIe card bracket.

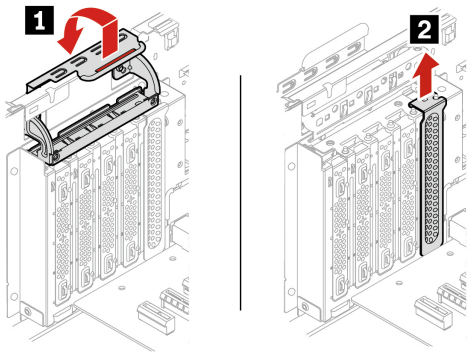

Broadcom 940-8i RAID card battery and box

Prerequisite

Before you start, ensure that you have read the relevant sections in Prerequisites for hardware replacement, which includes:

- General prerequisites
- Prerequisites for opening left side cover of the computer
- Prerequisites for replacing storage drives
- Prerequisites for replacing hot-swappable storage drives in the front-access storage enclosure
- Prerequisites for replacing power supply assembly

Removal steps

1. Remove the “Left side cover” on page 32.
2. Remove the Broadcom 940-8i RAID card battery box.

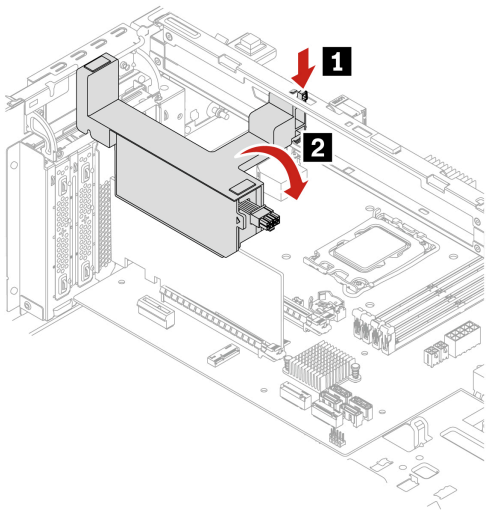

3. Remove the Broadcom 940-8i RAID card battery from the box.

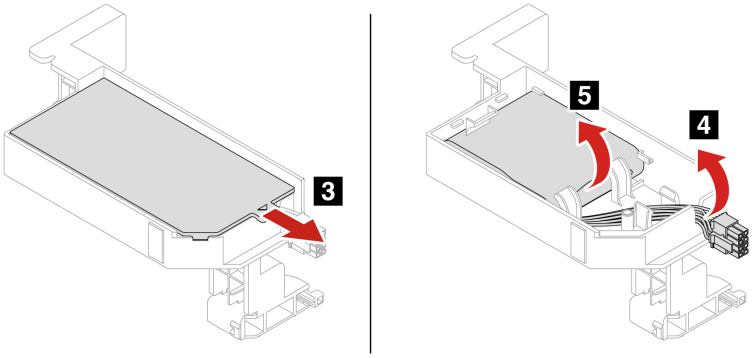

PCIe adapter card

Prerequisite

Before you start, ensure that you have read the relevant sections in Prerequisites for hardware replacement, which includes:

- General prerequisites
- Prerequisites for opening left side cover of the computer
- Prerequisites for replacing storage drives
- Prerequisites for replacing hot-swappable storage drives in the front-access storage enclosure
- Prerequisites for replacing power supply assembly

Removal steps

1. Remove the following parts, if any:
   a. “Left side cover” on page 32
   b. “Broadcom 940-8i RAID card battery and box” on page 59
2. Remove the PCIe adapter card.

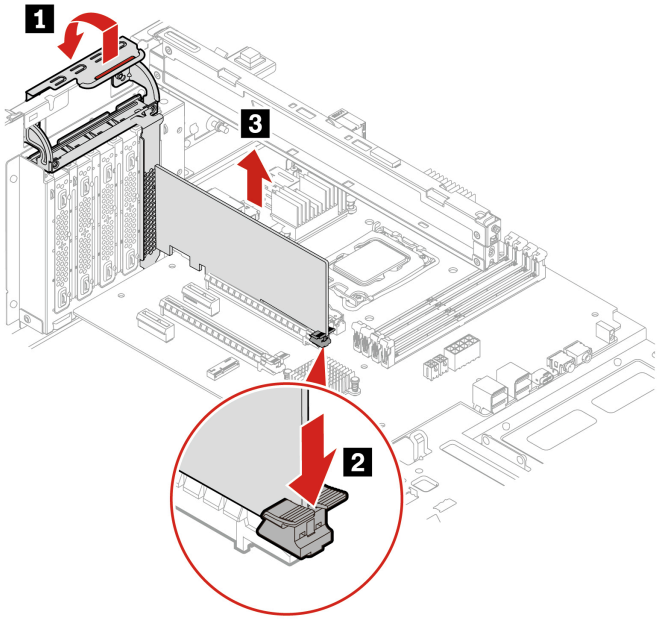

3. For some Ethernet PCIe adapter cards, the following fiber modules can be removed.

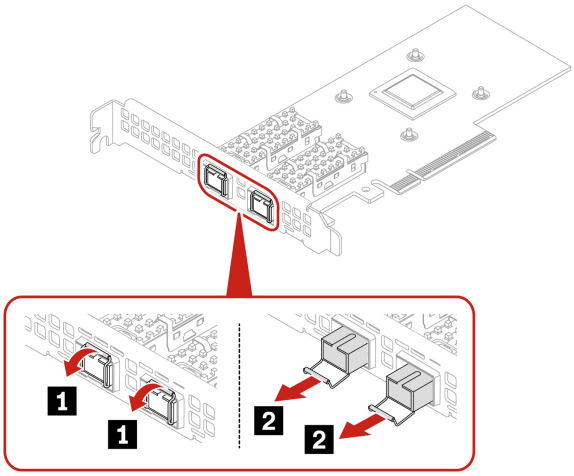

Graphics card

Prerequisite

Before you start, ensure that you have read the relevant sections in Prerequisites for hardware replacement, which includes:

- General prerequisites
- Prerequisites for opening left side cover of the computer
- Prerequisites for replacing storage drives
- Prerequisites for replacing hot-swappable storage drives in the front-access storage enclosure
- Prerequisites for replacing power supply assembly

Removal steps of type-1 graphics card

1. Remove the “Left side cover” on page 32.
2. Remove the graphics card retainer, if any.

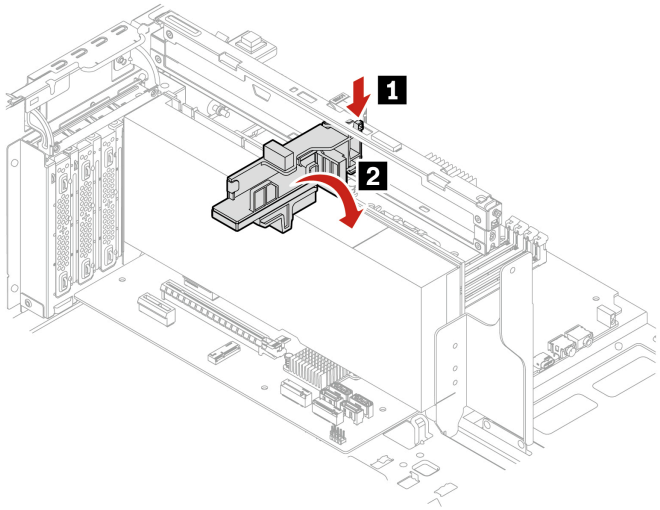

3. Remove the graphics card with the extender.

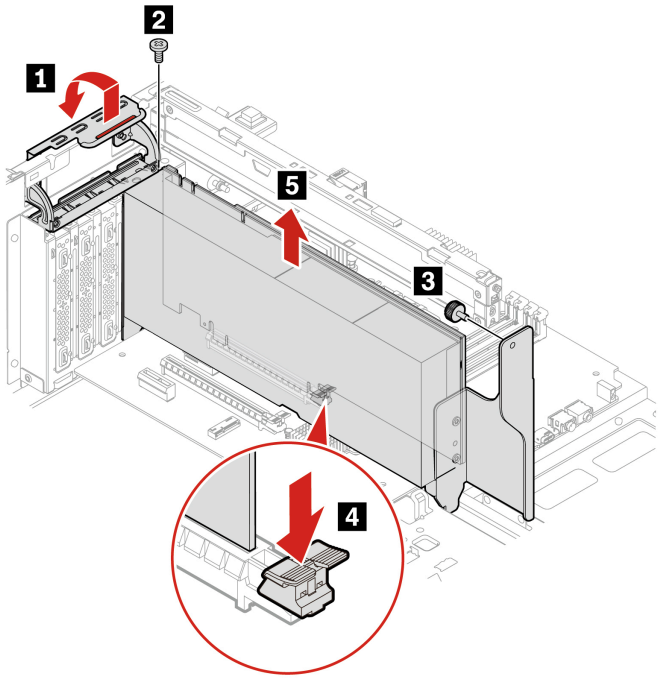

Step	Screw (quantity)	Torque
2	#6-32 × 7.5 mm (0.3 inches), Nickel coated (1) (for selected models)	0.56 ± 0.05 Nm (5.75 ± 0.57 kgf-cm)
3	#6-32 × 7.5 mm (0.3 inches), Nickel coated (1)	0.56 ± 0.05 Nm (5.75 ± 0.57 kgf-cm)

4. Remove the graphics card from the extender.

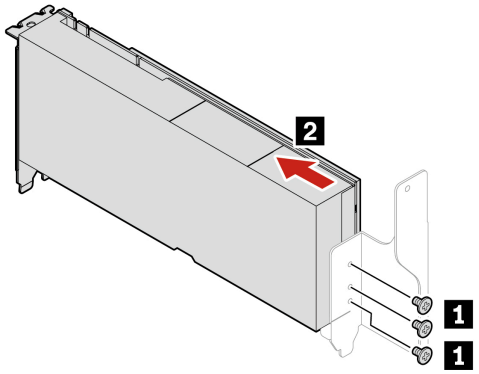

Step	Screw (quantity)	Torque
1	M3 × 5 mm (0.2 inches), Zn coated (2 or 3)	0.34 ± 0.06 Nm (3.46 ± 0.58 kgf-cm)

5. Remove the graphics card holder, if any.

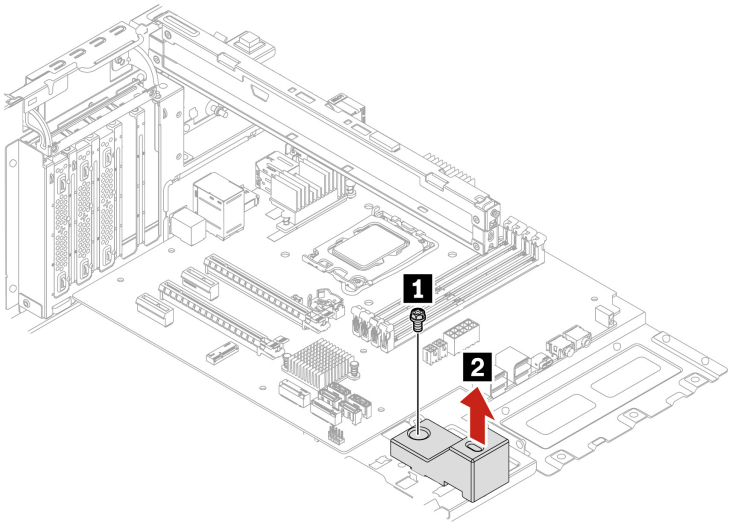

Step	Screw (quantity)	Torque
1	M3 × 5 mm (0.2 inches), Zn coated (1)	0.56 ± 0.05 Nm (5.75 ± 0.57 kgf-cm)

Removal steps of type-2 graphics card

1. Remove the “Left side cover” on page 32.
2. Remove the graphics card with the extender.

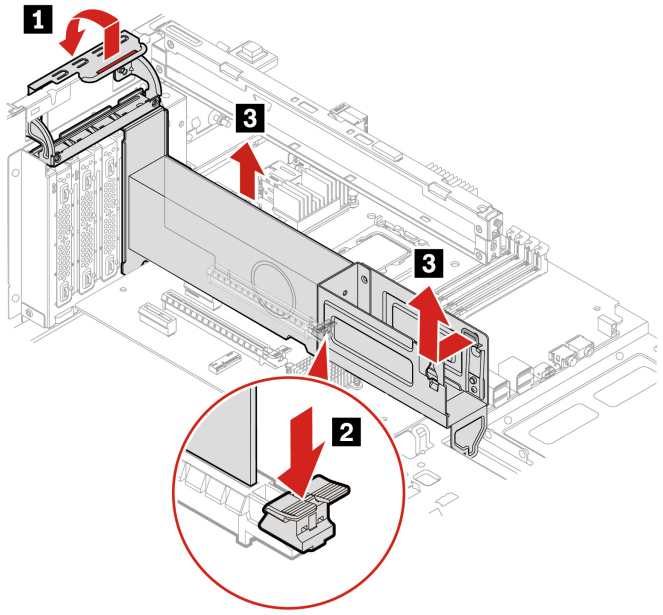

3. Remove the graphics card from the extender.

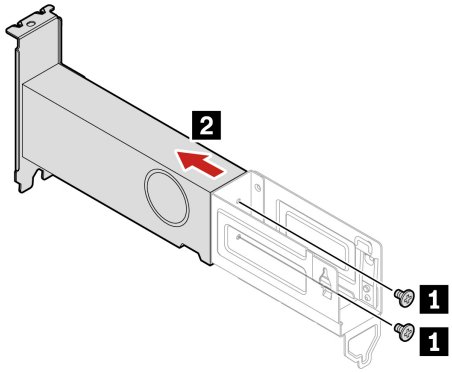

Step	Screw (quantity)	Torque
1	M3 × 5 mm (0.2 inches), Zn coated (2)	0.34 ± 0.06 Nm (3.46 ± 0.58 kgf-cm)

Flexible I/O port card

Prerequisite

Before you start, ensure that you have read the relevant sections in Prerequisites for hardware replacement, which includes:

- General prerequisites
- Prerequisites for opening left side cover of the computer
- Prerequisites for replacing storage drives
- Prerequisites for replacing hot-swappable storage drives in the front-access storage enclosure
- Prerequisites for replacing power supply assembly

Removal steps

1. Remove the “Left side cover” on page 32.
2. Remove the flexible I/O port card.
   - Type 1

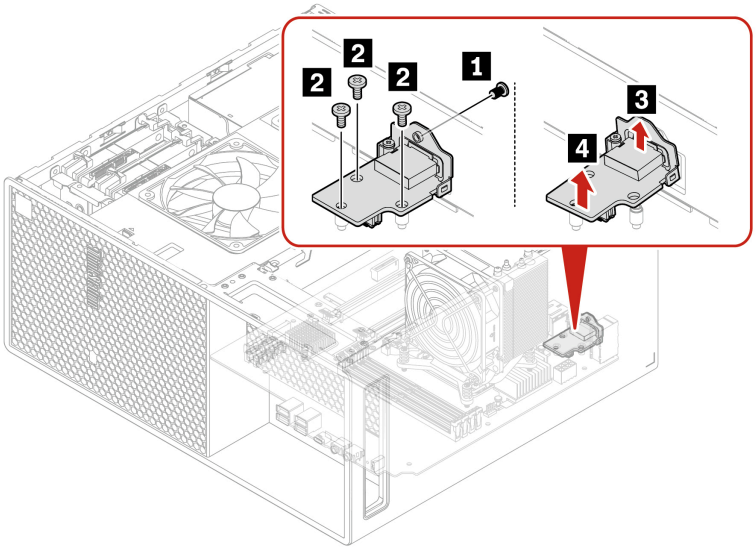

Step	Screw (quantity)	Torque
1	M2-5 × 4 mm (0.16 inches), Nickel coated (1)	0.16 ± 0.05 Nm (1.72 ± 0.57 kgf-cm)
2	M3 × 3.2 mm (0.13 inches), Nickel coated (3)	0.56 ± 0.05 Nm (5.75 ± 0.57 kgf-cm)

   - Type 2

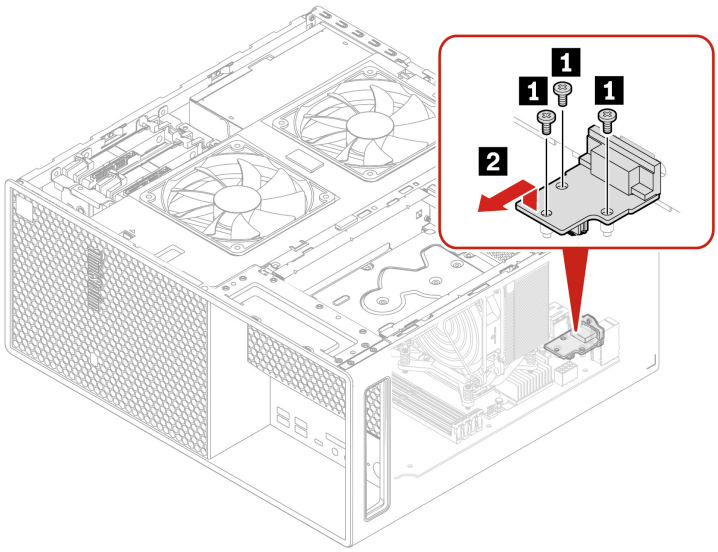

Step	Screw (quantity)	Torque
1	M3 × 3.2 mm (0.13 inches), Nickel coated (3)	0.56 ± 0.05 Nm (5.75 ± 0.57 kgf-cm)

Chassis beam

Prerequisite

Before you start, ensure that you have read the relevant sections in Prerequisites for hardware replacement, which includes:

- General prerequisites
- Prerequisites for opening left side cover of the computer
- Prerequisites for replacing storage drives
- Prerequisites for replacing hot-swappable storage drives in the front-access storage enclosure
- Prerequisites for replacing power supply assembly

Removal steps

1. Remove the following parts, if any:
   a. “Left side cover” on page 32
   b. “Side fan with bracket” on page 54
   c. “PCIe card bracket” on page 59
   d. “PCIe adapter card” on page 60
   e. “Graphics card” on page 61
2. Remove the chassis beam.

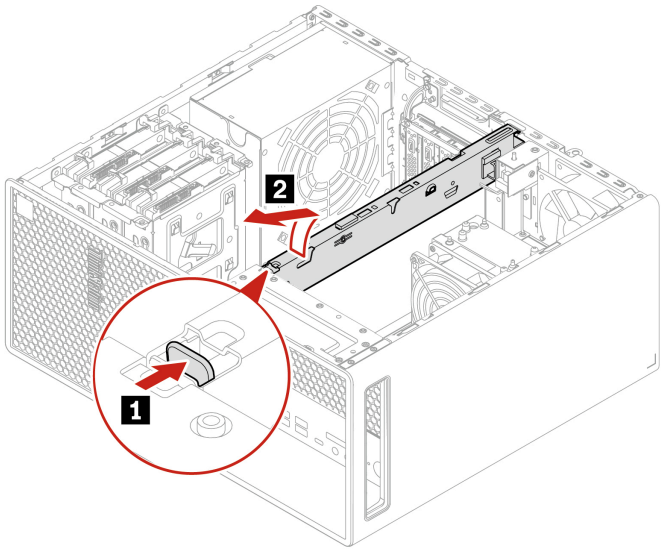

Installation step

Install the chassis beam.

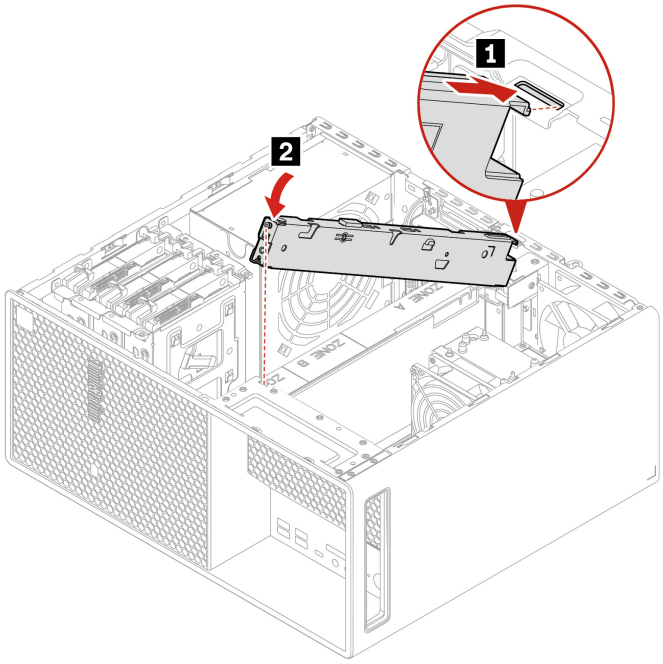

Rear fan

Prerequisite

Before you start, ensure that you have read the relevant sections in Prerequisites for hardware replacement, which includes:

- General prerequisites
- Prerequisites for opening left side cover of the computer
- Prerequisites for replacing storage drives
- Prerequisites for replacing hot-swappable storage drives in the front-access storage enclosure
- Prerequisites for replacing power supply assembly

Removal steps

1. Remove the “Left side cover” on page 32.
2. The rear fan is attached to the chassis by four rubber mounts. Stretch the tips of the rubber mounts and gently pull the rear fan assembly out of the chassis.

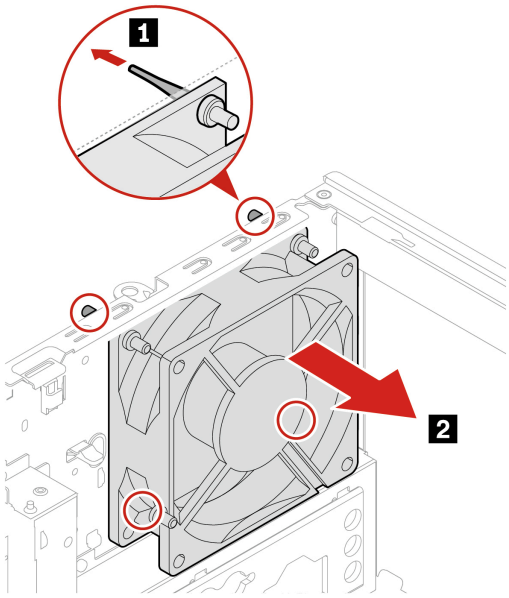

Installation steps

Align the rubber mounts with the corresponding holes in the chassis and push the rubber mounts through the holes. Rotate and pull the tips of the rubber mounts until the rear fan assembly is secured.

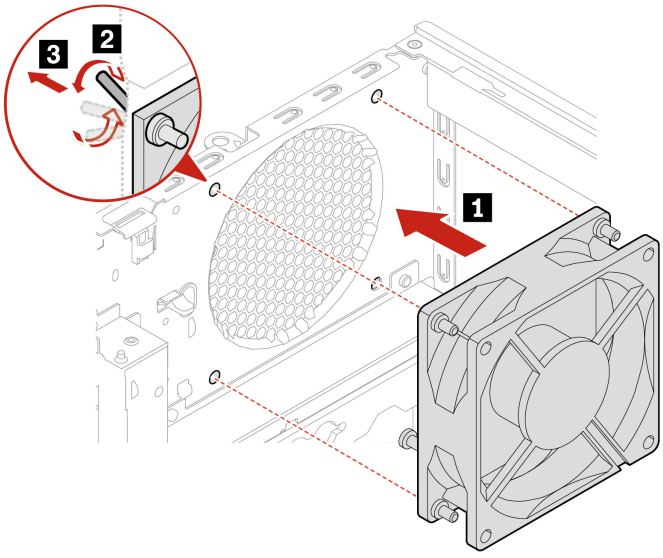

Cover presence switch

Prerequisite

Before you start, ensure that you have read the relevant sections in Prerequisites for hardware replacement, which includes:

- General prerequisites
- Prerequisites for opening left side cover of the computer
- Prerequisites for replacing storage drives
- Prerequisites for replacing hot-swappable storage drives in the front-access storage enclosure
- Prerequisites for replacing power supply assembly

Removal steps

1. Remove the “Left side cover” on page 32.
2. Remove the cover presence switch.

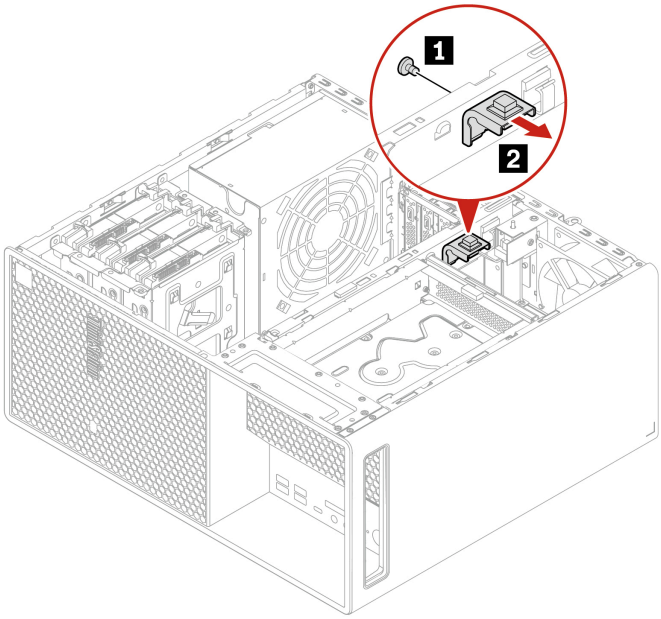

Step	Screw (quantity)	Torque
1	#6-32 × 5 mm (0.2 inches), Nickel coated (1)	0.56 ± 0.05 Nm (5.75 ± 0.57 kgf-cm)

Internal speaker

Prerequisite

Before you start, ensure that you have read the relevant sections in Prerequisites for hardware replacement, which includes:

- General prerequisites
- Prerequisites for opening left side cover of the computer

- Prerequisites for replacing storage drives
- Prerequisites for replacing hot-swappable storage drives in the front-access storage enclosure
- Prerequisites for replacing power supply assembly

Removal steps

1. Remove the “Left side cover” on page 32.
2. Remove the internal speaker.

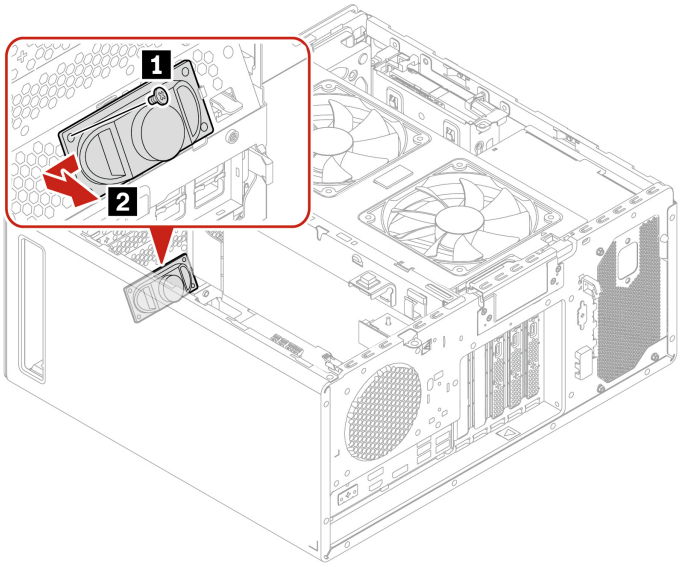

Step	Screw (quantity)	Torque
1	#6-32 × 5 mm (0.2 inches), Nickel coated (1)	0.56 ± 0.05 Nm (5.75 ± 0.57 kgf-cm)

Wi-Fi antenna cover

Prerequisite

Before you start, ensure that you have read the relevant sections in Prerequisites for hardware replacement, which includes:

- General prerequisites
- Prerequisites for opening left side cover of the computer
- Prerequisites for replacing storage drives
- Prerequisites for replacing hot-swappable storage drives in the front-access storage enclosure
- Prerequisites for replacing power supply assembly

Removal steps

1. Remove the “Left side cover” on page 32.
2. Remove the Wi-Fi antenna cover.

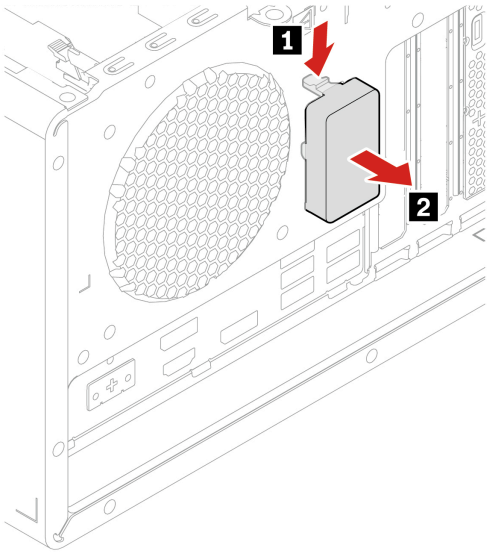

Smart cable clip

Prerequisite

Before you start, ensure that you have read the relevant sections in Prerequisites for hardware replacement, which includes:

- General prerequisites
- Prerequisites for opening left side cover of the computer
- Prerequisites for replacing storage drives
- Prerequisites for replacing hot-swappable storage drives in the front-access storage enclosure
- Prerequisites for replacing power supply assembly

Removal steps

1. Remove the “Left side cover” on page 32.
2. Remove the smart cable clip.

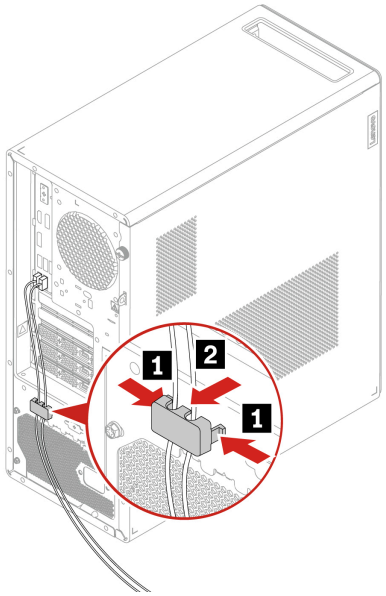

Memory module

Prerequisite

- Before you start, ensure that you have read the relevant sections in Prerequisites for hardware replacement, which includes:
  - General prerequisites
  - Prerequisites for opening left side cover of the computer
  - Prerequisites for replacing storage drives
  - Prerequisites for replacing hot-swappable storage drives in the front-access storage enclosure
  - Prerequisites for replacing power supply assembly
- Ensure that you remove or install memory modules at least one minute after disconnecting power cords from the system. It allows the system to be completely discharged of electricity and safe for handling memory modules.

Removal steps

1. Remove the “Left side cover” on page 32.
2. Remove the memory module.

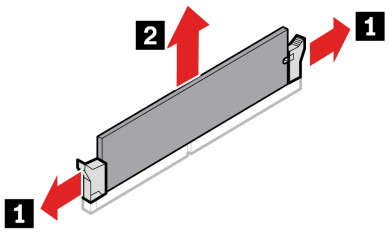

Installation steps and rules

- **Installation step**

Align the memory module to the slot and press down on both ends until the latches are fully engaged with a click.

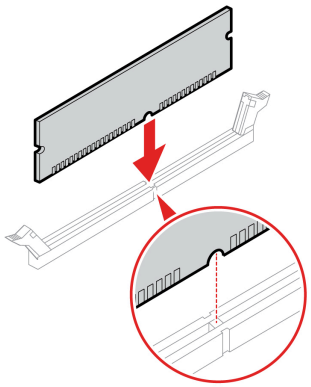

- **Installation rules**
  - Install memory modules in the correct order shown in the following illustration.

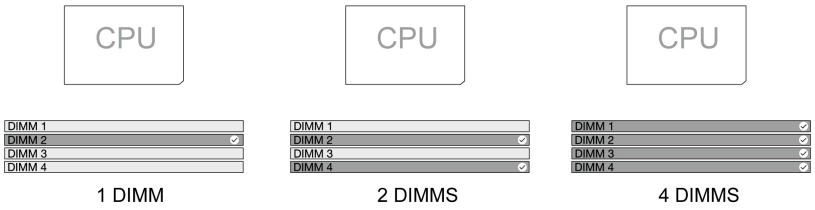

  - Install memory modules of the same type, the same capacity, and the same DRAM densities. For example, ECC UDIMMS and non-ECC UDIMMs can't be used together.
  - The four memory slots support 2DPC (two DMIMs per channel). DIMM1 and DIMM2 is one channel. DIMM3 and DIMM4 is another channel. Symmetric configurations are required within one channel. Ensure that the two DIMMs installed in one channel are from the same manufacturer.

E-lock

Prerequisite

Before you start, ensure that you have read the relevant sections in Prerequisites for hardware replacement, which includes:

- General prerequisites
- Prerequisites for opening left side cover of the computer
- Prerequisites for replacing storage drives
- Prerequisites for replacing hot-swappable storage drives in the front-access storage enclosure
- Prerequisites for replacing power supply assembly

Removal steps

1. Remove the "Left side cover" on page 32.
2. Remove the E-lock.

   Note: To remove the screws, you need a special tool (T15 star wrench).

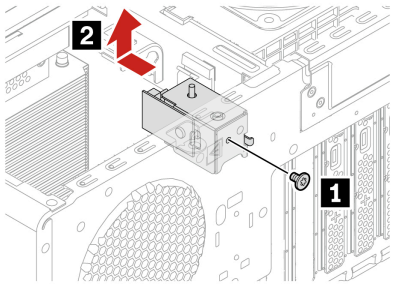

Step	Screw (quantity)	Torque
1	M3 × 5 mm (0.2 inches), Nickel coated (1)	0.56 ± 0.05 Nm (5.75 ± 0.57 kgf-cm)

Chassis rubber foot

Prerequisite

Before you start, ensure that you have read the relevant sections in Prerequisites for hardware replacement, which includes:

- General prerequisites
- Prerequisites for opening left side cover of the computer
- Prerequisites for replacing storage drives
- Prerequisites for replacing hot-swappable storage drives in the front-access storage enclosure
- Prerequisites for replacing power supply assembly

Removal steps

Remove the chassis rubber foot.

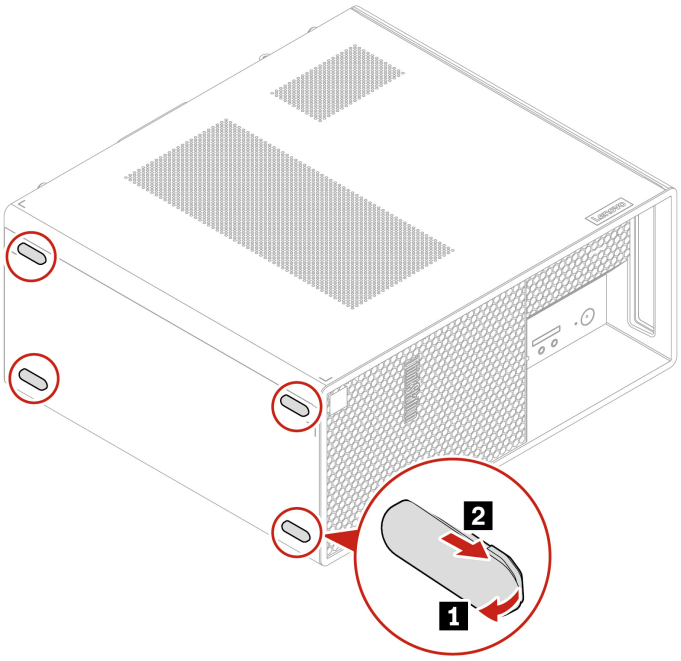

Chapter 6. Help and support

Find your serial number

This topic helps you find computer serial number.

You can find your serial number via:

- **Dashboard**
- Machine-type and serial-number label of your computer (shown as below illustration)

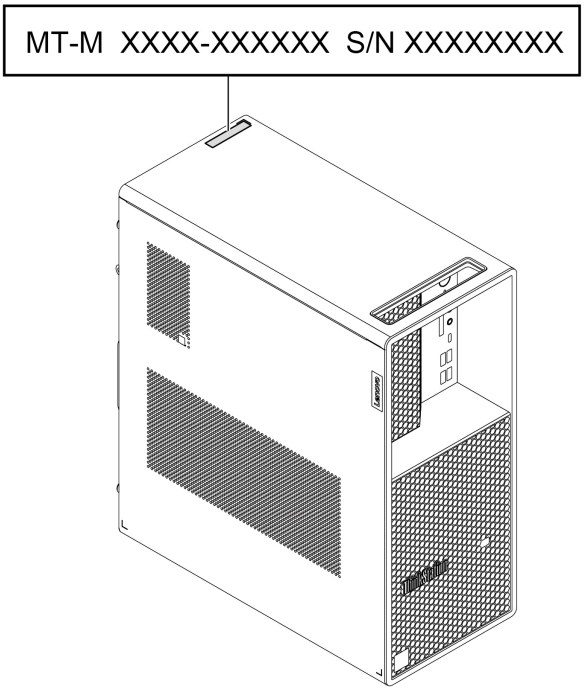

Note: On the label, TWR represents Tower and G2 represents Gen 2. Therefore, P3 TWR G2 represents P3 Tower Gen 2.

Troubleshoot and diagnose at Lenovo Support Web site

Lenovo provides two different diagnosing solutions to help you identify and resolve problems on your computer.

Step 1. Go to https://www.pcsupport.lenovo.com/ and enter your product name in the search box.

Step 2. Click **Troubleshoot & Diagnose** and select the option that fits your need.

Notes:

- Before launching any automatic diagnosing process, a pop-up window will be prompted to install Lenovo Service Bridge. Lenovo Service Bridge helps to connect your computer with Lenovo diagnosing tools.

© Copyright Lenovo 2025

    - Lenovo Support Web site makes periodic updates of the sections to keep improving your experience with your computer. The Web site interface and descriptions of sections might be different from that on your actual interface.

- If you are unaware of what problem your computer goes with, it is recommended that you select **Easy** and follow on-screen instructions to get your firmware updated and obtain the hardware status.
- If you have identified the problem on your computer, you can select **Custom** and follow on-screen instructions to resolve the problem.

If solutions can not resolve problems on your computer, you can follow on-screen instructions to submit an e-ticket or contact Lenovo for professional assistance.

Call Lenovo

If you have tried to correct the problem yourself and still need help, you can call Lenovo Customer Support Center.

Before you contact Lenovo

Prepare the needed information before you contact Lenovo.

1. Record the problem symptoms and details:
    - What is the problem? Is it continuous or intermittent?
    - Any error message or error code?
    - What operating system are you using? Which version?
    - Which software applications were running at the time of the problem?
    - Can the problem be reproduced? If so, how?
2. Record the system information:
    - Product name.
    - Machine type and “serial number” on page 75.

Lenovo Customer Support Center

During the warranty period, you can call Lenovo Customer Support Center for help.

Telephone numbers

For a list of the Lenovo Support phone numbers for your country or region, go to:
https://pcsupport.lenovo.com/supportphonelist

Note: Phone numbers are subject to change without notice. If the number for your country or region is not provided, contact your Lenovo reseller or Lenovo marketing representative.

Services available during the warranty period

- Problem determination - Trained personnel are available to assist you with determining if you have a hardware problem and deciding what action is necessary to fix the problem.
- Lenovo hardware repair - If the problem is determined to be caused by Lenovo hardware under warranty, trained service personnel are available to provide the applicable level of service.
- Engineering change management - Occasionally, there might be changes that are required after a product has been sold. Lenovo or your reseller, if authorized by Lenovo, will make selected Engineering Changes (ECs) that apply to your hardware available.

Services not covered

- Replacement or use of parts not manufactured for or by Lenovo or nonwarranted parts
- Identification of software problem sources
- Configuration of UEFI BIOS as part of an installation or upgrade
- Changes, modifications, or upgrades to device drivers
- Installation and maintenance of network operating systems (NOS)
- Installation and maintenance of programs

For the terms and conditions of the Lenovo Limited Warranty that apply to your Lenovo hardware product, see *Safety and Warranty Guide* that comes with your computer.

Self-help resources

Use the following self-help resources to learn more about the computer and troubleshoot problems.

Resources	How to access?
Lenovo Support Web Site	https://pcsupport.lenovo.com
Tips	https://www.lenovo.com/tips
Lenovo Community	https://forums.lenovo.com
Accessibility information	https://www.lenovo.com/accessibility
Ubuntu help information	https://help.ubuntu.com/lts/ubuntu-help/index.html

Purchase accessories or additional services

This topic provides instructions on how to purchase accessories or additional services.

Accessories

Lenovo has a number of hardware accessories and upgrades to help expand the functionalities of your computer. Accessories include memory modules, storage devices, network cards, power adapters, keyboards, mice, and so on.

To shop at Lenovo, go to https://www.lenovo.com/accessories.

Additional services

During and after the warranty period, you can purchase additional services from Lenovo at https://pcsupport.lenovo.com/warrantyupgrade.

Service availability and service names might vary by country or region.

Accessibility features

Lenovo is committed to making information technology accessible to everyone, including individuals with hearing, vision, mobility, cognitive, or speech disabilities. To get the most up-to-date and detailed accessibility features information for the product, go to https://support.lenovo.com/docs/product_accessibility_features.

Supplemental information about the Ubuntu operating system

In limited countries or regions, Lenovo offers customers an option to order computers with the preinstalled Ubuntu® operating system.

If the Ubuntu operating system is available on your computer, read the following information before you use the computer. Ignore any information related to Windows-based programs, utilities, and Lenovo preinstalled applications in this documentation.

Access the Lenovo Limited Warranty

This product is covered by the terms of the Lenovo Limited Warranty (LLW), version L505-0010-02 08/2011. You can view the LLW in a number of languages from the following Web site. Read the Lenovo Limited Warranty at:
https://www.lenovo.com/warranty/llw_02

The LLW also is preinstalled on the computer. To access the LLW, go to the following directory:

```
/opt/Lenovo
```

If you cannot view the LLW either from the Web site or from your computer, contact your local Lenovo office or reseller to obtain a printed version of the LLW.

Access the Ubuntu help system

The Ubuntu help system provides information about how to use the Ubuntu operating system. To access the help system from Home Screen, move your pointer to the Launch bar, and then click the **Help** icon. If you cannot find the **Help** icon from the Launch bar, click the **Search** icon on the bottom left, and type Help to search it.

To learn more about the Ubuntu operating system, go to:
https://www.ubuntu.com

Access IGEL distributions

To learn more about the IGEL operating system, go to https://www.igel.com/support.

Get support information

If you need help, service, technical assistance, or more information about the Ubuntu operating system or other applications, contact the provider of the Ubuntu operating system or the provider of the application. If you need the service and support for hardware components shipped with your computer, contact Lenovo. For more information about how to contact Lenovo, refer to the *User Guide* and *Safety and Warranty Guide*.

To access the latest *User Guide* and *Safety and Warranty Guide*, go to:
https://pcsupport.lenovo.com

Access open-source information

This device includes software made publicly available by Lenovo, including software licensed under the General Public License and/or the Lesser General Public License (the open source software).

You may obtain a copy of the corresponding source code for any such open source software licensed under the General Public License and/or the Lesser General Public License (or any other license requiring us to make a written offer to provide corresponding source code to you) from Lenovo for a period of three years without charge except for the cost of media, shipping, and handling, upon written request to Lenovo. This offer is valid to anyone in receipt of this device.

You may send your request in writing to the address below accompanied by a check or money order for $15 to:

Lenovo Legal Department
Attn: Open Source Team / Source Code Requests
8001 Development Dr.

Morrisville, NC 27560

Please include the version of the OS and the version of the Linux Kernel pre-shipped on this Device as part of your request. Be sure to provide a return address.

The open source software is distributed in hope it will be useful, but WITHOUT ANY WARRANTY; without even the implied warranty of MERCHANTABILITY or FITNESS FOR A PARTICULAR PURPOSE. See for example the GNU General Public License and/or the Lesser General Public License for more information.

To view additional information regarding licenses, acknowledgments and required copyright notices for the open source software shipped on your Device, go to `/usr/share/doc/*/copyright`.

Appendix A. Notice for USB connector name update

The USB Implementers Forum published a revision of the guideline for USB connector names in September, 2022. Lenovo follows the revised guideline and updates USB connector names accordingly. You can refer to the table below for naming update details.

Current name	Previous name
USB-A connector (Hi-Speed USB)	USB-A 2.0 connector
USB-A connector (USB 5Gbps)	USB-A 3.2 Gen 1 connector
USB-A connector (USB 10Gbps)	USB-A 3.2 Gen 2 connector
USB-A connector (USB 5Gbps, Always On USB)	Always on USB-A 3.2 Gen 1 connector
USB-A connector (USB 10Gbps, Always On USB)	Always on USB-A 3.2 Gen 2 connector
USB-C connector (USB 5Gbps)	USB-C (3.2 Gen 1) connector
USB-C connector (USB 10Gbps)	USB-C (3.2 Gen 2) connector
USB-C connector (USB 20Gbps)	USB 3.2 Gen 2x2
USB-C connector (USB4 20Gbps)	USB 4 Gen 2x2
USB-C connector (USB4 40Gbps)	USB-C (USB 4) connector
USB-C connector (Thunderbolt 3)	USB-C (Thunderbolt 3) connector
USB-C connector (Thunderbolt 4)	USB-C (Thunderbolt 4) connector

© Copyright Lenovo 2025

Appendix B. Notices and trademarks

Notices

Lenovo may not offer the products, services, or features discussed in this document in all countries. Consult your local Lenovo representative for information on the products and services currently available in your area. Any reference to a Lenovo product, program, or service is not intended to state or imply that only that Lenovo product, program, or service may be used. Any functionally equivalent product, program, or service that does not infringe any Lenovo intellectual property right may be used instead. However, it is the user's responsibility to evaluate and verify the operation of any other product, program, or service.

Lenovo may have patents or pending patent programs covering subject matter described in this document. The furnishing of this document does not give you any license to these patents. You can send license inquiries, in writing, to:

Lenovo (United States), Inc.
8001 Development Drive
Morrisville, NC 27560
U.S.A.
Attention: Lenovo Director of Licensing

LENOVO PROVIDES THIS PUBLICATION "AS IS" WITHOUT WARRANTY OF ANY KIND, EITHER EXPRESS OR IMPLIED, INCLUDING, BUT NOT LIMITED TO, THE IMPLIED WARRANTIES OF NON-INFRINGEMENT, MERCHANTABILITY OR FITNESS FOR A PARTICULAR PURPOSE. Some jurisdictions do not allow disclaimer of express or implied warranties in certain transactions, therefore, this statement may not apply to you.

Changes are made periodically to the information herein; these changes will be incorporated in new editions of the publication. To provide better service, Lenovo reserves the right to improve and/or modify the products and software programs described in the manuals included with your computer, and the content of the manual, at any time without additional notice.

The software interface and function and hardware configuration described in the manuals included with your computer might not match exactly the actual configuration of the computer that you purchase. For the configuration of the product, refer to the related contract (if any) or product packing list, or consult the distributor for the product sales. Lenovo may use or distribute any of the information you supply in any way it believes appropriate without incurring any obligation to you.

The products described in this document are not intended for use in implantation or other life support applications where malfunction may result in injury or death to persons. The information contained in this document does not affect or change Lenovo product specifications or warranties. Nothing in this document shall operate as an express or implied license or indemnity under the intellectual property rights of Lenovo or third parties. All information contained in this document was obtained in specific environments and is presented as an illustration. The result obtained in other operating environments may vary.

Lenovo may use or distribute any of the information you supply in any way it believes appropriate without incurring any obligation to you.

Any references in this publication to non-Lenovo Web sites are provided for convenience only and do not in any manner serve as an endorsement of those Web sites. The materials at those Web sites are not part of the materials for this Lenovo product, and use of those Web sites is at your own risk.

© Copyright Lenovo 2025

Any performance data contained herein was determined in a controlled environment. Therefore, the result obtained in other operating environments may vary significantly. Some measurements may have been made on development-level systems and there is no guarantee that these measurements will be the same on generally available systems. Furthermore, some measurements may have been estimated through extrapolation. Actual results may vary. Users of this document should verify the applicable data for their specific environment.

This document is copyrighted by Lenovo and is not covered by any open source license, including any Linux® agreement(s) which may accompany software included with this product. Lenovo may update this document at any time without notice.

For the latest information or any questions or comments, contact or visit the Lenovo Web site:

https://pcsupport.lenovo.com

Trademarks

Lenovo, the Lenovo logo, Lenovo Legion, IdeaPad, Yoga, ThinkCentre, the ThinkCentre logo, ThinkEdge, the ThinkEdge logo, ThinkPad, the ThinkPad logo, and TrackPoint are trademarks of Lenovo. Intel, Intel Optane, and Thunderbolt are trademarks of Intel Corporation or its subsidiaries in the U.S. and/or other countries. Linux is the registered trademark of Linus Torvalds in the U.S. and other countries. Microsoft, Microsoft Teams, Windows, Windows Hello, One Drive, Outlook, Skype, Office 365, Direct3D, and BitLocker are trademarks of the Microsoft group of companies. Mini DisplayPort (mDP) and DisplayPort are trademarks of the Video Electronics Standards Association. NVIDIA is a registered trademark of NVIDIA Corporation. Dolby, Dolby Voice, Dolby Audio and Dolby Atmos are trademarks of Dolby Laboratories Licensing Corporation. The terms HDMI and HDMI High-Definition Multimedia Interface are trademarks or registered trademarks of HDMI Licensing LLC in the United States and other countries. USB4® and USB-C® are registered trademarks of USB Implementers Forum. Wi-Fi and Miracast are registered trademarks of Wi-Fi Alliance. All other trademarks are the property of their respective owners.


Lenovo