AEG

aeg.com/register

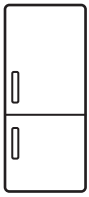

RMB952D6VB

EN User Manual | **Fridge Freezer**

Welcome to AEG! Thank you for choosing our appliance.

Get usage advice, brochures, troubleshooting, service and repair information:
www.aeg.com/support

Subject to change without notice.

CONTENTS

1. SAFETY INFORMATION..... 2
2. SAFETY INSTRUCTIONS..... 4
3. INSTALLATION..... 6
4. PRODUCT DESCRIPTION..... 10
5. OPERATION..... 10
6. DAILY USE..... 13
7. HINTS AND TIPS..... 15
8. CARE AND CLEANING..... 17
9. TROUBLESHOOTING..... 18
10. NOISES..... 20
11. TECHNICAL DATA..... 21
12. INFORMATION FOR TEST INSTITUTES..... 21
13. ENVIRONMENTAL CONCERNS..... 21

1. ⚠ SAFETY INFORMATION

Before the installation and use of the appliance, carefully read the supplied instructions. The manufacturer is not responsible for any injuries or damage that are the result of incorrect installation or usage. Always keep the instructions in a safe and accessible location for future reference.

1.1 Children and vulnerable people safety

- This appliance can be used by children aged from 8 years and above and persons with reduced physical, sensory or mental capabilities or lack of experience and knowledge if they have been given supervision or instruction concerning the use of the appliance in a safe way and understand the hazards involved. Children aged from 3 to 8 years and persons with very extensive and complex disabilities are allowed to load and unload the appliance provided that they have been properly instructed. Children of less than 3 years

of age should be kept away from the appliance unless continuously supervised.
- Children should be supervised to ensure that they do not play with the appliance.
- Children shall not carry out cleaning and user maintenance of the appliance without supervision.
- Keep all packaging away from children and dispose of it appropriately.

1.2 General Safety

- This appliance is for storing food and beverages only.
- This appliance is designed for single household domestic use in an indoor environment.
- This appliance may be used in, offices, hotel guest rooms, bed & breakfast guest rooms, farm guest houses and other similar accommodation where such use does not exceed (average) domestic usage levels.
- To avoid contamination of food respect the following instructions:
  - do not open the door for long periods;
  - clean regularly surfaces that can come in contact with food and accessible drainage systems;
  - store raw meat and fish in suitable containers in the refrigerator, so that it is not in contact with or drip onto other food.
- WARNING: Keep ventilation openings, in the appliance enclosure or in the built-in structure, clear of obstruction.
- WARNING: Do not use mechanical devices or other means to accelerate the defrosting process, other than those recommended by the manufacturer.
- WARNING: Do not damage the refrigerant circuit.
- WARNING: Do not use electrical appliances inside the food storage compartments of the appliance, unless they are of the type recommended by the manufacturer.
- Do not use water spray and steam to clean the appliance.

- Clean the appliance with a moist soft cloth. Only use neutral detergents. Do not use abrasive products, abrasive cleaning pads, solvents or metal objects.
- When the appliance is empty for long period, switch it off, defrost, clean, dry and leave the door open to prevent mould from developing within the appliance.
- Do not store explosive substances such as aerosol cans with a flammable propellant in this appliance.
- If the supply cord is damaged, it must be replaced by the manufacturer, its Authorised Service Centre or similarly qualified persons in order to avoid a hazard.

2. SAFETY INSTRUCTIONS

2.1 Installation

⚠ WARNING!

Only a qualified person must install this appliance.

- Remove all the packaging.
- Do not install or use a damaged appliance.
- Follow the separate instructions for the appliance installation and door reversing available on our website.
- Always take care when moving the appliance as it is heavy. Always use safety gloves and enclosed footwear.
- Make sure the air can circulate around the appliance.
- At first installation or after reversing the door, wait at least 4 hours before connecting the appliance to the power supply. This is to allow the oil to flow back in the compressor.
- Before carrying out any operations on the appliance (e.g. reversing the door), remove the plug from the power socket.
- Do not install the appliance close to radiators or cookers, ovens, or hobs, unless otherwise specified in the installation instructions.
- Do not expose the appliance to the rain.
- Do not install the appliance where there is direct sunlight.
- Do not install this appliance in areas that are too humid or too cold.
- When you move the appliance, lift it by the front edge to avoid scratching the floor.
- Protect the floor from scratches when reversing the appliance door.

2.2 Electrical connection

⚠ WARNING!

Risk of fire and electric shock.

⚠ WARNING!

When positioning the appliance, ensure the supply cord is not trapped or damaged.

⚠ WARNING!

Do not use multi-plug adapters and extension cables.

- Make sure that the parameters on the rating plate are compatible with the electrical ratings of the mains power supply.
- The appliance must be earthed.
- Always use a correctly installed shockproof socket.
- If the domestic power supply socket is not earthed, connect the appliance to a separate earth in compliance with current

regulations, consulting a qualified electrician.
- Make sure not to cause damage to the electrical components (e.g. mains plug, mains cable, compressor). Contact the Authorised Service Centre or an electrician to change the electrical components.
- The mains cable must stay below the level of the mains plug.
- Connect the mains plug to the mains socket only at the end of the installation. Make sure that there is access to the mains plug after the installation.
- Do not pull the mains cable to disconnect the appliance. Always pull the mains plug.

2.3 Use

⚠ WARNING!

Risk of injury, burns, electric shock or fire.

 The appliance contains flammable gas, isobutane (R600a), a natural gas with a high level of environmental compatibility. Be careful not to cause damage to the refrigerant circuit containing isobutane.

- Do not change the specification of this appliance.
- This appliance is intended to be used at ambient temperature ranging from 10°C to 43°C. The specified temperature range guarantees the correct operations of the appliance.
- Do not put electrical appliances (e.g. ice cream makers) in the appliance unless they are stated applicable by the manufacturer.
- If damage occurs to the refrigerant circuit, make sure that there are no flames and sources of ignition in the room. Ventilate the room.
- Do not let hot items to touch the plastic parts of the appliance.
- Do not put soft drinks in the freezer compartment. This will create pressure on the drink container.
- Do not store flammable gas and liquid in the appliance.
- Do not put flammable products or items that are wet with flammable products in, near or on the appliance.
- Do not touch the compressor or the condenser. They are hot.
- Do not remove or touch items from the freezer compartment if your hands are wet or damp.
- Do not freeze again food that has been thawed.
- Follow the storage instructions on the packaging of frozen food.
- Wrap the food in any food contact material before putting it in the freezer compartment.
- Do not allow food to come in contact with the inner walls of the appliance compartments.
- Do not put highly salty or acidic foods in contact with the aluminum parts of the appliance (e.g. fan cover).

2.4 Internal lighting

⚠ WARNING!

Risk of electric shock.

- This product contains one or more light sources of energy efficiency class G.
- Concerning the lamp(s) inside this product and spare part lamps sold separately: These lamps are intended to withstand extreme physical conditions in household appliances, such as temperature, vibration, humidity, or are intended to signal information about the operational status of the appliance. They are not intended to be used in other applications and are not suitable for household room illumination.

2.5 Care and cleaning

⚠ WARNING!

Risk of injury or damage to the appliance.

- Before maintenance, deactivate the appliance and disconnect the mains plug from the mains socket.
- This appliance contains hydrocarbons in the cooling unit. Only a qualified person must do the maintenance and the recharging of the unit.

2.6 Service

- To repair the appliance contact the Authorised Service Centre. Use only original spare parts.
- Please note that self-repair or non-professional repair can have safety consequences and might void the guarantee.
- The following spare parts are available for at least 7 years after the model has been discontinued: thermostats, temperature sensors, printed circuit boards, light sources, door handles, door hinges, trays and baskets. Door gaskets are available for at least 10 years after the model has been discontinued. The duration may be longer in your country. For further information, please visit our website.
- Please note that some of these spare parts are only available to professional repairers, and that not all spare parts are relevant for all models.

2.7 Disposal

⚠ WARNING!

Risk of injury or suffocation.

- Disconnect the appliance from the mains supply.
- Cut off the mains cable and discard it.
- Remove the door to prevent children and pets to be closed inside of the appliance.
- The refrigerant circuit and the insulation materials of this appliance are ozone-friendly.
- The insulation foam contains flammable gas. Contact your municipal authority for information on how to discard the appliance correctly.
- Do not cause damage to the part of the cooling unit that is near the heat exchanger.

3. INSTALLATION

⚠ WARNING!

Refer to Safety chapters.

3.1 Dimensions

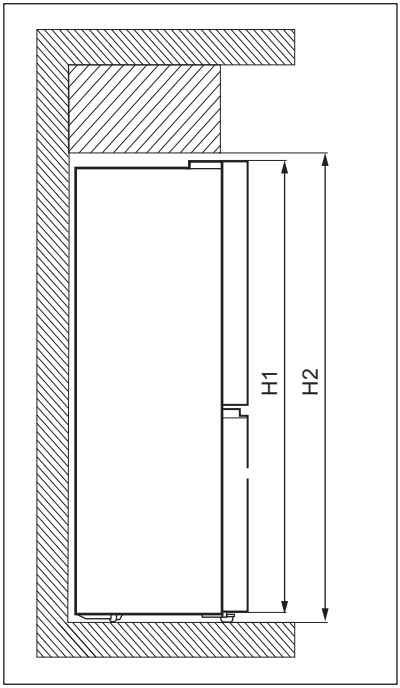

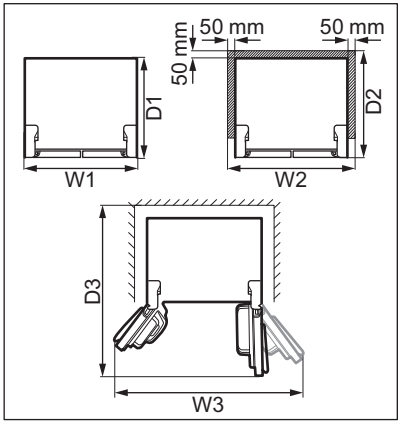

Overall dimensions [1]		
H1	mm	1900
W1	mm	905
D1	mm	673

[1] the height, width and depth of the appliance without the handle

Space required in use [2]		
H2	mm	1950
W2	mm	1005
D2	mm	723

[2] the height, width and depth of the appliance including the handle, plus the space necessary for free circulation of the cooling air

Overall space required in use [3]		
H2	mm	1950
W3	mm	1515
D3	mm	1112

[3] the height, width and depth of the appliance including the handle, plus the space necessary for free circulation of the cooling air, plus the space necessary to allow door opening to the minimum angle permitting removal of all internal equipment

3.2 Location

This appliance is not intended to be used as a built-in appliance.

In case of different installation from freestanding respecting space required in use dimensions, the appliance will function

correctly but energy consumption might increase slightly.

To ensure appliance's best functionality, you should not install the appliance in the nearby of the heat source (oven, stoves, radiators, cookers, hoods, hobs or extractor hobs) or in a place with direct sunlight. Make sure that air can circulate freely around the back of the cabinet.

This appliance should be installed in a dry, well ventilated indoor position.

To ensure best performance, if the appliance is positioned below an overhanging wall unit, the minimum distance between the top of the cabinet shall be maintained. Ideally, however, the appliance should not be positioned below overhanging wall units. One or more adjustable feet at the base of the cabinet ensure that the appliance stands level.

⚠ CAUTION!

If you position the appliance against the wall, use back spacers provided or keep the minimum distance indicated in the installation instructions.

⚠ CAUTION!

If you install the appliance next to a wall, refer to the installation instructions to understand the minimum distance between the wall and the side of the appliance where door hinges are to provide enough space to open the door when the internal equipment is removed (e.g. when cleaning).

This appliance is intended to be used at ambient temperature ranging from 10°C to 43°C.

ⓘ

The correct operation of the appliance can only be guaranteed within the specified temperature range.

ⓘ

If you have any doubts regarding where to install the appliance, please turn to the vendor, to our customer service or to the nearest Authorised Service Centre.

ⓘ

It must be possible to disconnect the appliance from the mains power supply. The plug must therefore be easily accessible after installation.

3.3 Electrical connection

- Before plugging in, ensure that the voltage and frequency shown on the rating plate correspond to your domestic power supply.
- The appliance must be earthed. The power supply cable plug is provided with a contact for this purpose. If the domestic power supply socket is not earthed, connect the appliance to a separate earth in compliance with current regulations, consulting a qualified electrician.
- The manufacturer declines all responsibility if the above safety precautions are not observed.

3.4 Levelling

When placing the appliance make sure that it stands level. This can be achieved by two adjustable feet at the bottom in front.

3.5 Adjusting the door

If tops of the appliance upper doors are not in line:

1. Make sure the appliance stands level. Refer to the "Levelling" section.
2. Lift lower door slightly and insert a C washer between bottom door and middle hinge.

⚠ CAUTION!

Avoid fingers injury, use a clip to insert the washer.

ⓘ

Find spare C washers in accessory bag.

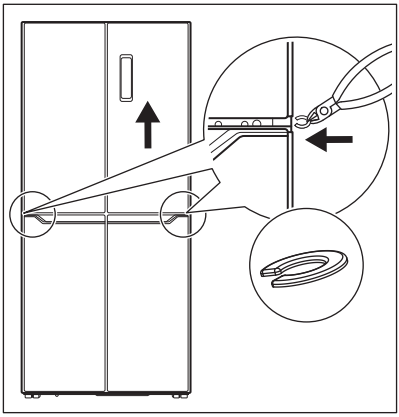

⚠ CAUTION!

Keep C washers away from children. Hazard of swallowing.

3.6 Door reversibility

Reversing the door swing is not possible.

3.7 Rubber blocks

Every door contains one rubber block to reduce closing impact.

If the rubber block is not in the place, insert it as presented on the picture below.

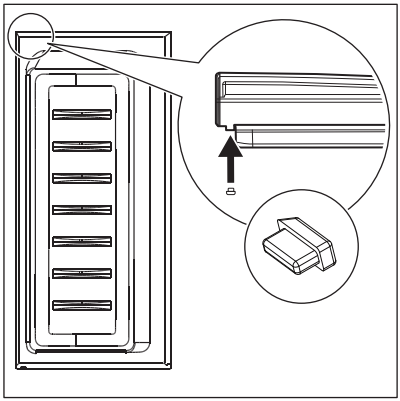

ⓘ

Find spare rubber blocks in accessory bag.

⚠ CAUTION!

Keep rubber blocks away from children. Hazard of swallowing.

4. PRODUCT DESCRIPTION

4.1 Product overview

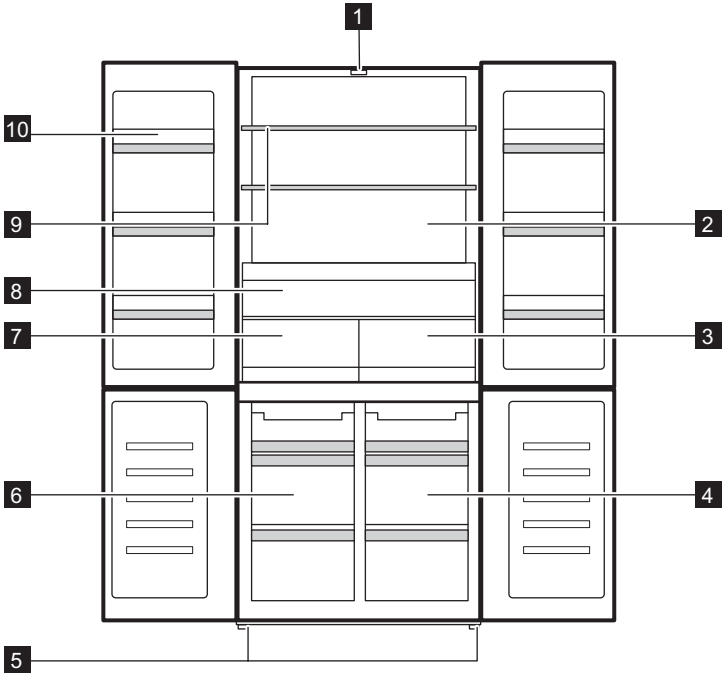

1 LED light
2 Refrigerator compartment
3 Chill Zone 0 degree drawer
4 MultiSwitch+ compartment
5 Feet
6 Freezer compartment
7 Fresh Zone drawer
8 Extra Zone drawer
9 Refrigerator shelf
10 Door balcony

5. OPERATION

5.1 Control Panel

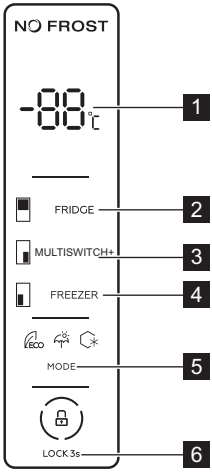

1 Temperature indicator
2 Fridge temperature regulation key
3 MultiSwitch+ temperature regulation key
4 Freezer temperature regulation key
5 Mode key
6 Child Lock key

5.2 Switching on and off

To switch on the appliance, insert the plug into the wall socket.

When the appliance is switched on for the first time:

- the interior light may turn on after a one-minute delay due to opening tests.
- the High temperature alarm activates.

Refer to the "High temperature alarm" section for more information.

To switch off the appliance, unplug it.

5.3 Temperature regulation

The temperature can be set between:

- 2°C and 8°C for the fridge compartment,
- -14°C and -22°C for the freezer compartment,
- 5°C and -3°C for the MultiSwitch+ compartment.

To set the temperature for any of the above compartments, press the corresponding compartment key repeatedly until you reach the desired temperature. The temperature indicator flashes for 5 seconds after the selection.

You may turn the fridge compartment off by repeatedly pressing the corresponding compartment key until you reach “- -”. The temperature indicator flashes for 5 seconds after the selection. This indicates the compartment will stop refrigerating.

Choose the setting keeping in mind that the temperature inside the appliance depends on:

- room temperature,
- frequency of opening the door,
- quantity of food stored,
- appliance location.

A medium setting is generally the most suitable one.

5.4 Super Freezing function

The Super Freezing function is used to perform pre-freezing and fast freezing in sequence of freezer compartment. It accelerates the freezing of fresh food and, at the same time, protects foodstuffs already stored from undesirable warming.

ⓘ

To freeze fresh food activate the Super Freezing function at least 24 hours before placing the food to complete pre-freezing.

To activate this function, press the Mode key repeatedly until you reach the Super Freezing setting. The Super Freezing indicator flashes for 5 seconds and stays illuminated after the selection.

When the function is active:

- The set temperature of the freezer compartment is -25°C.
- The temperatures of fridge compartment and MultiSwitch+ compartment may be adjusted with the corresponding keys.

This function stops automatically after 50 hours.

To deactivate the Super Freezing function before its automatic end, press the Mode key and select a different mode.

5.5 Holiday mode

This mode allows you to keep the fridge compartment empty during a long holiday period reducing the formation of bad odours while the freezer compartment can work normally.

To activate this mode, press the Mode key repeatedly until you reach the Holiday setting. The Holiday mode indicator flashes for 5 seconds and stays illuminated after the selection.

During this mode:

- The set temperature of the fridge compartment is 17°C.
- The temperature of the freezer compartment and MultiSwitch+ compartment may be adjusted with the corresponding keys.

To deactivate the Holiday mode, press the Mode key and select a different mode.

5.6 ECO mode

The ECO mode ensures good food preservation with minimal energy consumption. This is the best setting during periods of non-operation.

To activate this mode, press the Mode key repeatedly until you reach the ECO mode setting. The ECO mode indicator flashes for 5 seconds and stays illuminated after the selection.

During this mode:

- The set temperature of the fridge compartment is 6°C.
- The set temperature of the freezer compartment is -16°C.
- The temperature of the MultiSwitch+ compartment may be adjusted with the corresponding key.

To deactivate the ECO mode, press the Mode key and select a different mode.

5.7 Child Lock function

The Child Lock function locks the keys from unintentional operation.

Press and hold the Child Lock key for 3 seconds to lock or unlock the Control Panel. The appliance beeps to confirm the setting.

ⓘ

The Child Lock function activates automatically after 20 seconds of no operation.

⚠ **WARNING!**

The Child Lock function deactivates if electricity is interrupted or the appliance is unplugged.

5.8 Door open alarm

If the fridge door is left open for approximately 1 minute, the sound is on.

The alarm stops after closing the door.

ⓘ

The sound switches off automatically after around 10 minutes to avoid disturbing.

5.9 High temperature alarm

The high temperature alarm is triggered after the freezer compartment reaches temperature higher than -6°C.

During the alarm:

- display shows "ht" (high temperature),
- freezer compartment indicator flashes,
- acoustic alarm beeps.

To turn off the alarm:

1. Check whether the freezer doors are open. If yes, close them properly. Refer to the "Closing the door" section.
2. Make sure food products inside the freezer are not spoiled or thawed. If yes, refer to the "Thawing" section.
3. Lower the temperature manually using the correspondent temperature regulation key. The normal display is restored after the freezer compartment reaches a temperature lower than -10°C.
4. If the freezer cooled automatically, open and close the doors to restore the normal display. Check if food products inside are not spoiled or thawed.

6. DAILY USE

⚠ **WARNING!**

Refer to Safety chapters.

6.1 Removing and installing door shelves

To remove the door shelf:

1. Hold the left side of the shelf.
2. Lift the right side of the shelf until it comes free from the fastener.

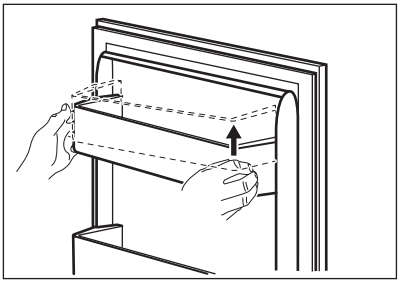

3. Lift the left side of the shelf and remove it.

To put the shelf back in:

1. Place the shelf flat on the door.
2. Push two sides of the shelf downwards at the same time so that the shelf fits both fasteners.

6.2 Movable shelves

The walls of the refrigerator compartment are equipped with a series of runners so that the shelves can be positioned as desired.

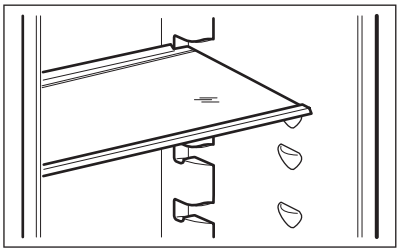

ⓘ

To ensure correct air circulation, do not move the glass shelf above the vegetable drawer.

6.3 Extra Zone

There is the Extra Zone drawer for better accessibility and visibility, so you can organize your fridge at best, avoiding mixing of food. The Extra Zone is located above the Fresh Zone and Chill Zone 0 degree drawers.

6.4 Fresh Zone

The Fresh Zone drawer protects the nutrients, taste, texture, colour and weight of

fruits and vegetables so you can enjoy quality food for longer and throw away less. The Fresh Zone is located below the Extra Zone and next to the Chill Zone 0 degree drawer.

6.5 Chill Zone 0 degree drawer

The Chill Zone 0 degree drawer marked with 0 Star, is suitable for the storage of a variety of fresh food (like fish, meat, seafood, lightly pickled food etc.) as it preserves its high nutritional values, taste, texture and weight. The sealed compartment assures an environment independent from the rest of the fridge.

The Chill Zone 0 degree drawer is located in the bottom part of the refrigerator, next to the Fresh Zone and directly under the Extra Zone.

To remove the drawer:

1. Pull the drawer out until it stops.
2. Once you reach the end of runners, lift slightly the front of the drawer and detach it from the appliance.

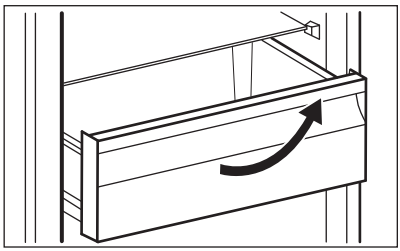

To put the drawer back into its initial position, follow the above steps in reverse order.

6.6 MultiSwitch+

The appliance comes with the MultiSwitch+ marked with / ***, a specialized compartment that may be used either as a chilling or refrigerating compartment, depending on your actual needs.

To set a temperature between 5°C and -3°C, press repeatedly the corresponding compartment key until you reach the desired temperature. The temperature indicator flashes for 5 seconds after the selection.

- Set the 4°C to use the MultiSwitch+ as a fridge fresh food compartment.
- Set the -18°C to use the MultiSwitch+ as a freezer 4 star compartment.

Other temperature settings are considered as incorrect use of the appliance and they do not guarantee the proper preservation of food.

You may turn the MultiSwitch+ off by pressing repeatedly the corresponding compartment key until you reach "- -". The temperature indicator flashes for 5 seconds after the selection. This indicates the MultiSwitch+ stops refrigerating.

After switching off, the MultiSwitch+ compartment obtains the ambient temperature.

6.7 Removing and installing the freezer drawers

To remove a drawer from the freezer compartment:

1. Open the freezer door completely.
2. Pull the drawer out until it stops.
3. Lift slightly the front of the drawer and detach it from the appliance.

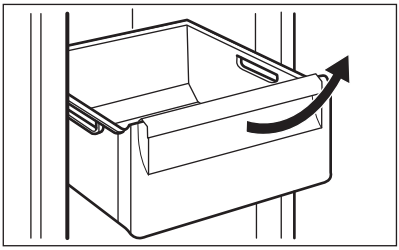

To put the drawer back into its initial position, follow the above steps in reverse order.

6.8 Fan

The refrigerator compartment is equipped with a device that allows rapid cooling of food and keeps a more uniform temperature in the compartment.

This device activates automatically when needed.

ⓘ

Do not block the air inlet and outlet openings when storing food, otherwise air circulation provided by the fan will be impaired.

6.9 Freezing fresh food

The freezer compartment is suitable for freezing fresh food and storing frozen and deep-frozen food for a long time.

To freeze fresh food activate the Super Freezing function at least 24 hours before placing the food to be frozen in the freezer compartment.

The maximum amount of food that can be frozen without adding other fresh food during 24 hours is specified on the rating plate (a label located inside the appliance).

When the freezing process is complete, the appliance returns to the previously set temperature. Refer to "Super Freezing function".

For more information refer to the "Hints for freezing" section.

6.10 Storage of frozen food

When activating an appliance for the first time or after a period out of use, before putting the products in the compartment let the appliance run at least 3 hours with the Super Freezing function switched on.

The freezer drawers ensure that it is quick and easy to find the food package you want. If large quantities of food are to be stored, remove all drawers and place the food on the shelves. Leave the bottom drawer in place to ensure good air circulation.

⚠ **CAUTION!**

In the event of accidental defrosting, for example due to a power failure, if the power has been off for longer than the value shown on rating plate under "rising time", the defrosted food must be consumed quickly or cooked immediately then cooled and then re-frozen. Refer to "High temperature alarm".

6.11 Thawing

Deep-frozen or frozen food, prior to being used, can be thawed in the refrigerator compartment or at room temperature, depending on the time available for this operation.

Small pieces may even be cooked still frozen, directly from the freezer: in this case, cooking will take longer.

7. HINTS AND TIPS

7.1 Hints for energy saving

- Freezer: The internal configuration of the appliance is the one that ensures the most efficient use of energy.
- Fridge: Most efficient use of energy is ensured in the configuration with the drawers in the bottom part of the appliance and shelves evenly distributed. Position of the door bins does not affect energy consumption.
- Do not open the door frequently or leave it open longer than necessary.
- Freezer: The colder the temperature setting, the higher the energy consumption.
- Fridge: Do not set too high temperature to save energy unless it is required by the characteristics of the food.
- If the ambient temperature is high and the temperature control is set to low temperature and the appliance is fully loaded, the compressor may run continuously, causing frost or ice formation on the evaporator. In this case, set the temperature control toward higher temperature to allow automatic defrosting and to save energy this way.

- Ensure a good ventilation. Do not cover the ventilation grilles or holes.
- Make sure that food products inside the appliance allow air circulation through dedicated holes in the rear interior of the appliance.

7.2 Hints for freezing

- Activate Super Freezing function at least 24 hours before placing the food inside the freezer compartment.
- Before freezing wrap and seal fresh food in: aluminium foil, plastic film or bags, airtight containers with lid.
- For more efficient freezing and thawing divide food into small portions.
- It is recommended to put labels and dates on all your frozen food. This will help to identify foods and to know when they should be used before their deterioration.
- The food should be fresh when being frozen to preserve good quality. Especially fruits and vegetables should be frozen after the harvest to preserve all of their nutrients.
- Do not freeze bottles or cans with liquids, in particular drinks containing carbon dioxide - they may explode during freezing.
- Do not put hot food in the freezer compartment. Cool it down at room temperature before placing it inside the compartment.
- To avoid increase in temperature of already frozen food, do not place fresh unfrozen food directly next to it. Place food at room temperature in the part of the freezer compartment where there is no frozen food.
- Do not eat ice cubes, water ices or ice lollies immediately after taking them out of the freezer. Risk of frostbites.
- Do not re-freeze defrosted food. If the food has defrosted, cook it, cool it down and then freeze it.

7.3 Hints for storage of frozen food

- Freezer compartment is the one marked with ✳ ✳✳✳.
- Good temperature setting that ensures preservation of frozen food products is a temperature less than or equal to -18°C. Higher temperature setting inside the appliance may lead to shorter shelf life.
- The whole freezer compartment is suitable for storage of frozen food products.
- Leave enough space around the food to allow air to circulate freely.
- For adequate storage refer to food packaging label to see the shelf life of food.
- It is important to wrap the food in such a way that prevents water, humidity or condensation from getting inside.

7.4 Shopping tips

After grocery shopping:

- Ensure that the packaging is not damaged - the food could be deteriorated. If the package is swollen or wet, it might have not been stored in the optimal conditions and defrosting may have already started.
- To limit the defrosting process buy frozen goods at the end of your grocery shopping and transport them in a thermal and insulated cool bag.
- Place the frozen foods immediately in the freezer after coming back from the shop.
- If food has defrosted even partially, do not re-freeze it. Consume it as soon as possible.
- Respect the expiry date and the storage information on the package.

7.5 Shelf life for freezer compartment

Type of food	Shelf life (months)
Bread	3
Fruits (except citrus)	6 - 12
Vegetables	8 - 10
Leftovers without meat	1 - 2
Dairy food:	
Butter	6 - 9
Soft cheese (e.g. mozzarella)	3 - 4
Hard cheese (e.g. parmesan, cheddar)	6
Seafood:	

Type of food	Shelf life (months)
Fatty fish (e.g. salmon, mackerel)	2 - 3
Lean fish (e.g. cod, flounder)	4 - 6
Shrimps	12
Shucked clams and mussels	3 - 4
Cooked fish	1 - 2
Meat:	
Poultry	9 - 12
Beef	6 - 12
Pork	4 - 6
Lamb	6 - 9
Sausage	1 - 2
Ham	1 - 2
Leftovers with meat	2 - 3

7.6 Hints for fresh food refrigeration

- Good temperature setting that ensures preservation of fresh food is a temperature less than or equal to +4°C.
  Higher temperature setting inside the appliance may lead to shorter shelf life of food.
- Cover the food with packaging to preserve its freshness and aroma.
- Always use closed containers for liquids and for food, to avoid flavours or odours in the compartment.
- To avoid the cross-contamination between cooked and raw food, cover the cooked food and separate it from the raw one.
- It is recommended to defrost the food inside the fridge.
- Do not insert hot food inside the appliance. Make sure it has cooled down at room temperature before inserting it.
- To prevent food waste the new stock of food should always be placed behind the old one.

7.7 Hints for food refrigeration

- Fresh food compartment is the one marked (on the rating plate) with .
- Meat and fish: wrap in a suitable packaging and place it on the glass shelf above the vegetable drawer. Store meat for at most 1-2 days.
- Fruit and vegetables: clean thoroughly (eliminate the soil) and place in a special drawer (vegetable drawer).
- It is advisable not to keep the exotic fruits like bananas, mangos, papayas etc. in the refrigerator.
- Vegetables like tomatoes, potatoes, onions, and garlic should not be kept in the refrigerator.
- Butter and cheese: place in an airtight container or wrap in an aluminium foil or a polythene bag to exclude as much air as possible.
- Bottles: close them with a cap and place them on the door bottle shelf, or (if available) on the bottle rack.
- Always refer to the expiry date of the products to know how long to keep them.

8. CARE AND CLEANING

⚠ WARNING!

Refer to Safety chapters.

8.1 Cleaning the interior

Before using the appliance for the first time, the interior and all internal accessories should be washed with lukewarm water and some neutral detergent to remove the typical smell of a brand-new product, then dried thoroughly.

⚠ CAUTION!

Do not use detergents, abrasive powders, chlorine or oil-based cleaners as they will damage the finish.

⚠ CAUTION!

The accessories and parts of the appliance are not suitable for washing in a dishwasher.

⚠ CAUTION!

Clean the control panel with a moist cloth. Do not use any detergents. After cleaning, wipe the control panel dry with a soft cloth.

8.2 Periodic cleaning

Clean the equipment regularly:

1. Clean the inside and accessories with lukewarm water and some neutral detergent.
2. Regularly check the door seals and wipe them clean to ensure they are clean and free from debris.
3. Rinse and dry thoroughly.

8.3 Defrosting of the appliance

Frost is automatically eliminated from the evaporator of the refrigerator compartment every time the motor compressor stops, during normal use. The defrost water drains out through a trough into a special container at the back of the appliance, next to the motor compressor, where it evaporates.

8.4 Periods of non-operation

When the appliance is not in use for long periods, take the following precautions:

1. Disconnect the appliance from electricity supply.
2. Remove all food.
3. Clean the appliance and all accessories.
4. Leave the doors open to prevent unpleasant smells.

9. TROUBLESHOOTING

⚠ WARNING!

Refer to Safety chapters.

9.1 What to do if...

Problem	Possible cause	Solution
The appliance does not operate.	The appliance is switched off.	Switch on the appliance.
	The mains plug is not connected to the mains socket correctly.	Connect the mains plug to the mains socket correctly.
	There is no voltage in the mains socket.	Connect a different electrical appliance to the mains socket. Contact a qualified electrician.
The appliance is noisy.	The appliance is not supported properly.	Check if the appliance stands stable.
The compressor operates continually.	Temperature is set incorrectly.	Refer to the "Operation" chapter.
	Many food products were put in at the same time.	Wait a few hours and then check the temperature again.
	The room temperature is too high.	Refer to the "Installation" chapter.
	Food products placed in the appliance were too warm.	Allow food products to cool to room temperature before storing.

Problem	Possible cause	Solution
	The door is not closed correctly.	Refer to the "Closing the door" section.
	The Super Freezing function is switched on.	Refer to the "Super Freezing function" section.
The compressor does not start immediately after pressing the "Super Freezing", or after changing the temperature.	The compressor starts after a period of time.	This is normal, no error has occurred.
Door is misaligned or interferes with ventilation grill.	The appliance is not levelled.	Refer to the installation instructions.
Door does not open easily.	You attempted to re-open the door immediately after closing.	Wait a few seconds between closing and re-opening of the door.
The lamp does not work.	The lamp is defective.	Contact the nearest Authorized Service Centre.
There is too much frost and ice.	The door is not closed correctly.	Refer to the "Closing the door" section.
	The gasket is deformed or dirty.	Refer to the "Closing the door" section.
	Food products are not wrapped properly.	Wrap the food products better.
	Temperature is set incorrectly.	Refer to the "Operation" chapter.
	Appliance is fully loaded and is set to the lowest temperature.	Set a higher temperature. Refer to the "Operation" chapter.
	Temperature set in the appliance is too low and the ambient temperature is too high.	Set a higher temperature. Refer to the "Operation" chapter.
Water flows on the rear plate of the refrigerator.	During the automatic defrosting process, frost melts on the rear plate.	This is correct. Dry the water with a soft cloth.
There is too much condensed water on the rear wall of the refrigerator.	Door was open too frequently.	Open the door only when necessary.
	Door was not closed completely.	Make sure the door is closed completely.
	Stored food was not wrapped.	Wrap food in suitable packaging before storing it in the appliance.
Water flows on the floor.	The melting water outlet is not connected to the evaporative tray above the compressor.	Attach the melting water outlet to the evaporative tray.
Temperature cannot be set.	The Super Freezing function is switched on.	Switch off the Super Freezing function manually, or wait until the function deactivates automatically to set the temperature. Refer to the "Super Freezing function" section.
The temperature in the appliance is too low/too high.	The temperature is not set correctly.	Set a higher/lower temperature.

Problem	Possible cause	Solution
	The door is not closed correctly.	Refer to the "Closing the door" section.
	The food products' temperature is too high.	Let the food products temperature decrease to room temperature before storage.
	Many food products are stored at the same time.	Store less food products at the same time.
	The door has been opened often.	Open the door only if necessary.
	The Super Freezing function is switched on.	Refer to the "Super Freezing function" section.
	There is no cold air circulation in the appliance.	Make sure that there is cold air circulation in the appliance. Refer to the "Hints and tips" chapter.

If the advice does not lead to the desired result, call the nearest Authorized Service Centre.

9.2 Replacing the lamp

The appliance is equipped with a longlife LED interior light.

Only service is allowed to replace the lighting device. Contact your Authorised Service Centre.

9.3 Closing the door

1. Clean the door gaskets.
2. If necessary, adjust the door. Refer to the "Installation" chapter.
3. If necessary, replace the defective door gaskets. To obtain more information, contact the Authorised Service Centre.

10. NOISES

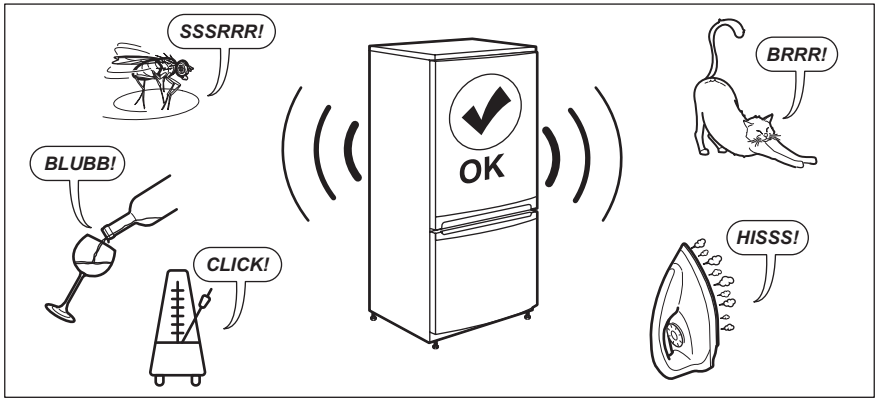

11. TECHNICAL DATA

The technical information is situated in the rating plate on the internal side of the appliance and on the energy label.

The QR code on the energy label supplied with the appliance provides a web link to the information related to the performance of the appliance in the EU EPREL database. Keep the energy label for reference together with the user manual and all other documents provided with this appliance.

It is also possible to find the same information in EPREL using the link *https://eprel.ec.europa.eu* and the model name and product number that you find on the rating plate of the appliance.

See the link *www.theenergylabel.eu* for detailed information about the energy label.

12. INFORMATION FOR TEST INSTITUTES

Installation and preparation of the appliance for any EcoDesign verification shall be compliant with EN 62552 (EU). Ventilation requirements, recess dimensions and minimum rear clearances shall be as stated in this User Manual in "Installation". Please contact the manufacturer for any other further information, including loading plans.

13. ENVIRONMENTAL CONCERNS

Recycle materials with the symbol . Put the packaging in relevant containers to recycle it. Help protect the environment and human health by recycling waste of electrical and electronic appliances. Do not dispose of appliances marked with the symbol  with the household waste. Return the product to your local recycling facility or contact your municipal office.

aeg.com

212003539-A-472024

