Electrolux

electrolux.com/register



EW9F710GCY

EN User Manual | **Washing Machine**

Welcome to Electrolux! Thank you for choosing our appliance.

Get usage advice, brochures, troubleshooting, service and repair information:
www.electrolux.com/support

Subject to change without notice.

CONTENTS

1. SAFETY INFORMATION..... 2
2. SAFETY INSTRUCTIONS..... 4
3. PRODUCT DESCRIPTION..... 6
4. TECHNICAL DATA..... 8
5. INSTALLATION..... 8
6. CONTROL PANEL AND SMARTSELECT..... 12
7. DIAL AND BUTTONS..... 13
8. FIRST TIME START-UP..... 15
9. BEFORE FIRST USE..... 16
10. THE WATER SOFTENER (COLOURCARE)..... 16
11. PROGRAMMES..... 20
12. WI-FI - CONNECTIVITY SETUP..... 28
13. OPTIONS..... 30
14. SETTINGS..... 34
15. DAILY USE..... 36
16. HINTS AND TIPS..... 40
17. CARE AND CLEANING..... 42
18. TROUBLESHOOTING..... 48
19. CONSUMPTION VALUES..... 53
20. QUICK GUIDE..... 54
21. ENVIRONMENTAL CONCERNS..... 56

1. ⚠ SAFETY INFORMATION

Before beginning the installation and use of this appliance, carefully read the supplied instructions.
The manufacturer is not responsible for any injuries or damage that are the result of incorrect installation or usage.
Always keep the instructions in a safe and accessible location for future reference.

1.1 Children and vulnerable people safety

- This appliance can be used by children aged from 8 years and above and persons with reduced physical, sensory or

mental capabilities or lack of experience and knowledge if they have been given supervision or instruction concerning the use of the appliance in a safe way and understand the hazards involved.

- Children between 3 and 8 years of age and persons with very extensive and complex disabilities shall be kept away from the appliance unless continuously supervised.
- Children of less than 3 years of age should be kept away from the appliance unless continuously supervised.
- Children should be supervised to ensure that they do not play with the appliance.
- Keep all packaging away from children and dispose of it appropriately.
- Keep detergents away from children.
- Keep children and pets away from the appliance when the door is open.
- Children shall not carry out cleaning and user maintenance of the appliance without supervision.

1.2 General Safety

- This appliance is for washing domestic-type, machine-washable laundry only.
- This appliance is designed for single household domestic use in an indoor environment.
- This appliance may be used in offices, hotel guest rooms, bed & breakfast guest rooms, farm guest houses and other similar accommodation where such use does not exceed (average) domestic usage levels.
- Do not change the specification of this appliance.
- The appliance maximum load is 10.0 kg. Do not exceed the maximum load of each programme (refer to the “Programmes” chapter).
- The operating water pressure at the water entry point from the outlet connection must be between 0.5 bar (0.05 MPa) and 10 bar (1.0 MPa).

- The ventilation opening in the base must not be covered by a carpet, mat, or any floor covering.
- The appliance must be connected to the water mains using the new supplied hose sets, or other new hose sets supplied by the Authorised Service Centre.
- Old hose sets must not be reused.
- If the mains power supply cable is damaged, it must be replaced by the manufacturer, its Authorised Service Centre or similarly qualified persons to avoid an electrical hazard.
- Before any maintenance operation, deactivate the appliance and disconnect the mains plug from the socket.
- Do not use high pressure water sprays and/or steam to clean the appliance.
- Clean the appliance with a moist cloth. Use only neutral detergents. Do not use abrasive products, abrasive cleaning pads, solvents or metal objects.

2. SAFETY INSTRUCTIONS

2.1 Installation

ⓘ

The installation must comply with relevant national regulations.

- Remove all the packaging and the transit bolts including rubber bush with plastic spacer.
- Keep the transit bolts in a safe place. If the appliance is to be moved in the future they must be reattached to lock the drum to prevent an internal damage.
- Always take care when moving the appliance as it is heavy. Always use safety gloves and enclosed footwear.
- Follow the installation instructions supplied with the appliance.
- Do not install or use a damaged appliance.
- Do not install or use the appliance where the temperature can be less than 0°C or where it is exposed to the weather.
- The floor area on which the appliance is to be installed must be flat, stable, heat resistant and clean.
- Make sure that there is air circulation between the appliance and the floor.
- When the appliance is in its permanent position, check if it is levelled correctly with the aid of a spirit level. If it is not, adjust the feet accordingly.
- Do not install the appliance directly above a floor drain.
- Do not spray water on the appliance and do not expose it to excessive humidity.
- Do not install the appliance where the appliance door cannot be fully opened.
- Do not put a closed container to collect possible water leakage under the appliance. Contact the Authorised Service Centre to ensure which accessories can be used.

2.2 Electrical connection

⚠ **WARNING!**

Risk of fire and electric shock.

- WARNING: This appliance is designed to be installed / connected to a grounding connection in the building.

- Always use a correctly installed shockproof socket.
- Make sure that the parameters on the rating plate are compatible with the electrical ratings of the mains power supply.
- Do not use multi-plug adapters and extension cables.
- Make sure not to cause damage to the mains plug and to the mains cable. Should the mains cable need to be replaced, this must be carried out by our Authorised Service Centre.
- Connect the mains plug to the mains socket only at the end of the installation. Make sure that there is access to the mains plug after the installation.
- Do not touch the mains cable or the mains plug with wet hands.
- Do not pull the mains cable to disconnect the appliance. Always pull the mains plug.

2.3 Water connection

- The inlet water shall not exceed 25 °C.
- Do not cause damage to the water hoses.
- Before connection to new pipes, pipes not used for a long time, where repair work has been carried out or new devices fitted (water meters, etc.), let the water flow until it is clean and clear.
- Ensure that there are no visible water leaks during and after the first use of the appliance.
- Do not use an extension hose if the inlet hose is too short. Contact the Authorised Service Centre for the replacement of the inlet hose.
- When unpacking the appliance, It is possible to see water flowing from the drain hose. This is due to the testing of the appliance with the use of water in the factory.
- You can extend the drain hose to maximum 400 cm. Contact the Authorised Service Centre for the other drain hose and the extension.
- Make sure that there is access to the tap after the installation.

2.4 Use

⚠ WARNING!

Risk of injury, electric shock, fire, burns or damage to the appliance.

- Follow the safety instructions on the detergent packaging.
- Do not put flammable products or items that are wet with flammable products in, near or on the appliance.
- Do not wash fabrics which are heavily soiled with oil, grease or other greasy substances. It can damage rubber parts of the appliance. Prewash such fabrics by hand before loading them into the appliance.
- Do not use laundry fragrances to avoid the risk of damaging plastic and rubber parts of the appliance.
- Do not touch the glass door while a programme operates. The glass can get hot.
- Make sure that all metal objects are removed from the laundry.

2.5 Internal lighting

⚠ WARNING!

Risk of injury.

- Visible LED radiation, do not look directly into the beam.
- To replace the internal lighting, contact the Authorised Service Centre.

2.6 Service

- To repair the appliance contact the Authorised Service Centre. Use original spare parts only.
- Please note that self-repair or non-professional repair can have safety consequences and might void the guarantee.
- The following spare parts are available for at least 10 years after the model has been discontinued: motor and motor brushes, transmission between motor and drum, pumps, shock absorbers and springs, washing drum, drum spider and related ball bearings, heaters and heating elements, including heat pumps, piping

and related equipment including hoses, valves, filters and aquastops, printed circuit boards, electronic displays, pressure switches, thermostats and sensors, software and firmware including reset software, door, door hinge and seals, other seals, door locking assembly, plastic peripherals such as detergent dispensers. The duration may be longer in your country. For further information, please visit our website.
- Please note that some of these spare parts are only available to professional repairers, and that not all spare parts are relevant for all models.
- Concerning the lamp(s) inside this product and spare part lamps sold separately: These lamps are intended to withstand extreme physical conditions in household appliances, such as temperature, vibration, humidity, or are intended to signal information about the operational status of the appliance. They are not intended to be used in other applications and are not suitable for household room illumination.

2.7 Disposal

⚠ WARNING!
Risk of injury or suffocation.

- Disconnect the appliance from the mains electrical and water supplies.
- Cut off the mains electrical cable close to the appliance and dispose of it.
- Remove the door catch to prevent children or pets from becoming trapped in the drum.
- Dispose of the appliance in accordance with local requirements for the disposal of Waste Electrical and Electronic Equipment (WEEE).

3. PRODUCT DESCRIPTION

3.1 Special features

Your new washing machine meets all modern requirements for an effective treatment of laundry with low water, energy and detergent consumption and proper care of fabric.

- The **interactive dynamic display** makes the setting and the use of the appliance more immediate and agreeable.
- The **Wi-Fi connection** and **Remote Start** enable you to start a cycle, to interact with your washing machine and to check the washing cycle status in remote control.
- The **SteamCare system**, thanks to **Steam Cashmere** and **Steam Refresh** programmes offers the perfect solution for refreshing even the most delicate garments without washing. Use the delicate fragrance exclusively developed by **Electrolux** to add a pleasant feeling of "just-washed" garment to the removing odours and wrinkles action.
- The **ColourCare technology** acts as **water softener** and removes harsh minerals from the inlet water and supplies soft water for the washing. Wash after wash, fabric stiffness, shrinkage and colour fading are prevented.
- The **UltraCare technology** has been designed to protect the fabric fibres thanks to different pre-mixing phases that dissolves first the detergent and then fabric softener in the water before they are distributed in the laundry. So every fibre is reached and cared for.
- The steam has a quick and easy way to refresh the clothes. The gentle steam programmes remove odours and reduce creases in dry fabrics so they need little ironing.
  The **Steam Anticrease option**, finishes every cycle with gentle steam that relaxes the fibres and reduces fabric creasing. Ironing will be easier!
- The **SensiCare System** detects the laundry load size defining the programme duration in 30 seconds. The washing programme is tailored to the laundry load and the type of fabric without consuming more time, energy and water than necessary.

3.2 Appliance overview

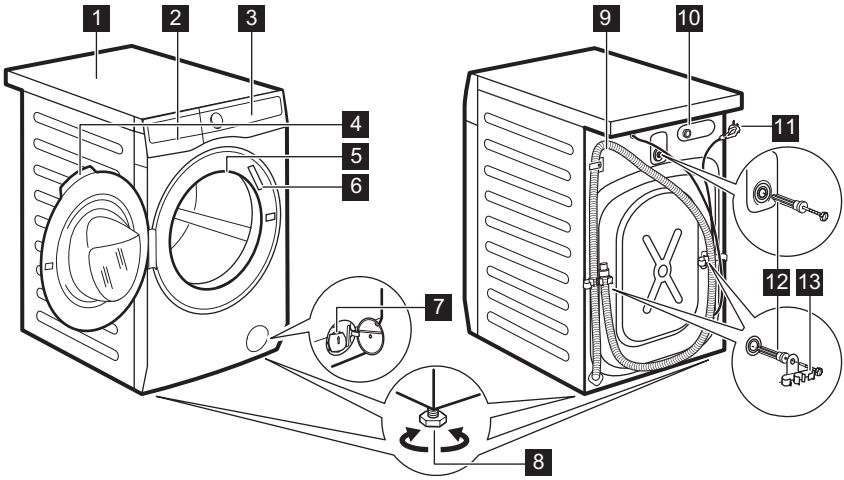

1 Worktop
2 Detergent dispenser
3 Control panel
4 Door handle
5 Internal light
6 Rating plate
7 Drain pump filter
8 Feet for levelling the appliance
9 Drain hose
10 Inlet hose connection
11 Mains cable
12 Transit bolts
13 Hose support

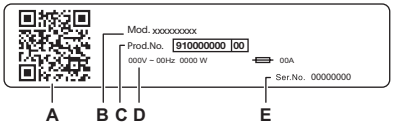

The rating plate reports:
A. QR code
B. Model name
C. Product number
D. Electrical ratings
E. Serial number

Scan the **QR code** with the camera to download our App from the app store on your smart device and follow the required steps. Register your product and get the most out of it.

- Access your appliance details, documentation and articles on how to use the best features (User Manual also available at **electrolux.com/manuals**)
- Get usage advice, troubleshooting, service and repair information (also available at **electrolux.com/support**)
- Buy accessories, Consumable and Original Spare parts for your appliance (also available at **electrolux.com/shop**)

4. TECHNICAL DATA

Dimension	Width/ Height/ Total depth	59.7 cm /84.7 cm /63.6 cm
Electrical connection	Voltage Overall power Fuse Frequency	230 V 2100 W 10 A 50 Hz
Level of protection against ingress of solid particles and moisture ensured by the protective cover, except where the low voltage equipment has no protection against moisture		IPX4
Water supply pressure	Minimum Maximum	0.5 bar (0.05 MPa) 10 bar (1.0 MPa)
Water supply **1)**		Cold water
Maximum Load	Cotton	10.0 kg

1) Connect the water inlet hose to a water tap with a 3/4" thread.

5. INSTALLATION

⚠ **WARNING!**

Refer to Safety chapters.

5.1 Unpacking

1. Open the door. Remove all the items from the drum.

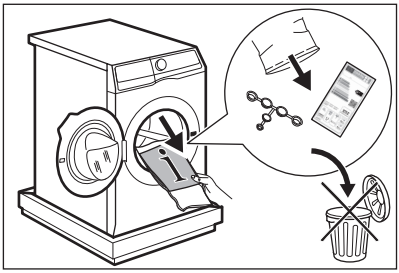

ⓘ

Accessories delivered with the appliance may vary depending on the model.

2. Put the packaging element on the floor behind the appliance and carefully put it down onto its rear side. Remove the protection from the bottom.

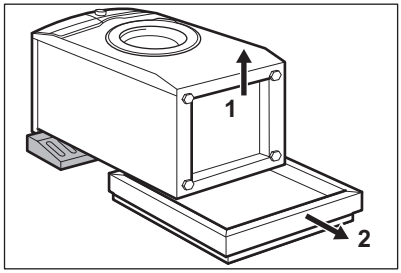

⚠ **CAUTION!**

Do not lay washing machine on its front.

3. Put the appliance back into an upright position. Remove the power supply cable and the drain hose from the hose holders.

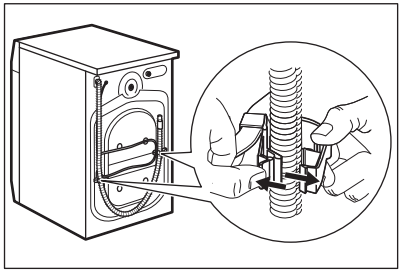

ⓘ

It is possible to see water flowing from the drain hose. This is because the washing machine has been tested at the factory.

4. Remove the three transit bolts and pull out the plastic spacers.

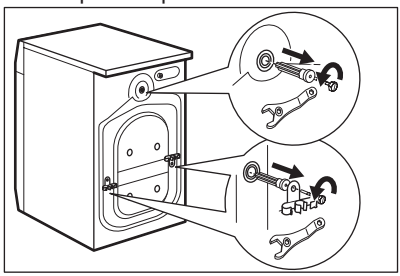

ⓘ

We recommend that you keep the packaging and the transit bolts for any transport of the appliance.

5. Put the plastic caps, that you find in the user manual bag, in the holes.

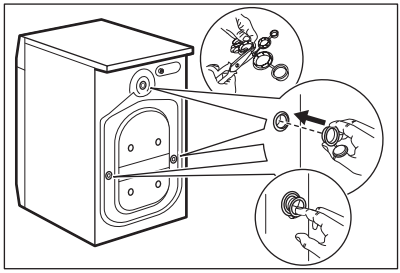

5.2 Information for installation

Positioning and levelling

Adjust the appliance correctly to prevent vibration, noise and movement of the appliance when it operates.

1. Install the appliance on a flat hard floor. The appliance must be levelled and stable. Make sure that the appliance does not touch the wall or other units and there is air circulation below the appliance.

2. Loosen or tighten the feet to adjust the level. All feet must rest firmly on the floor.

⚠ **WARNING!**

Do not put cardboard, wood or equivalent materials below the appliance feet to adjust the level.

The inlet hose

⚠ **CAUTION!**

Make sure there is no damage to hoses and there are no leaks from the couplings. Do not use an extension hose if the inlet hose is too short. Contact the service centre for information on inlet hose replacement.

1. Connect the water inlet hose to the back of the appliance if needs. Usually, it is already installed at the factory.

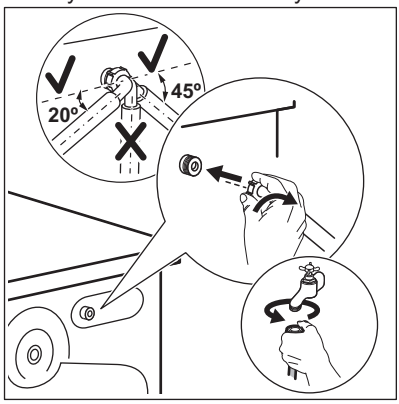

2. Position it toward left or right depending on the positon of the water tap. Make sure that the inlet hose is not in vertical position.
3. If necessary, loosen the ring nut to set it in the correct position.
4. Some model can contain inlet hose with water stop device. It prevents any leaks in the hose because of its natural ageing. The sector in the window shows this fault A. If this occurs, close the water tap and contact the authorized service center for information to replace the hose.

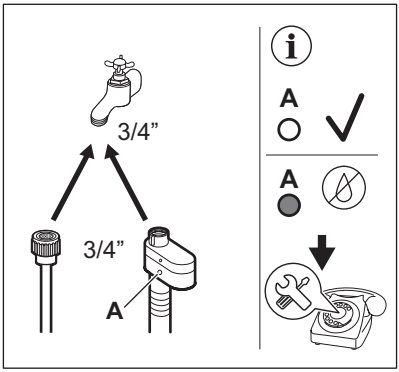

5. Connect the other end of the COLD water inlet hose to the cold water tap with 3/4" thread.

⚠ WARNING!

The inlet water shall not exceed 25 °C.

Water drainage

The drain hose should stay at a height of no less than 60 cm and not more than 100 cm.

You can extend the drain hose to maximum 400 cm. Contact the authorised service centre to buy the other drain hose and the extension.

It is possible to connect the drain hose in different ways:

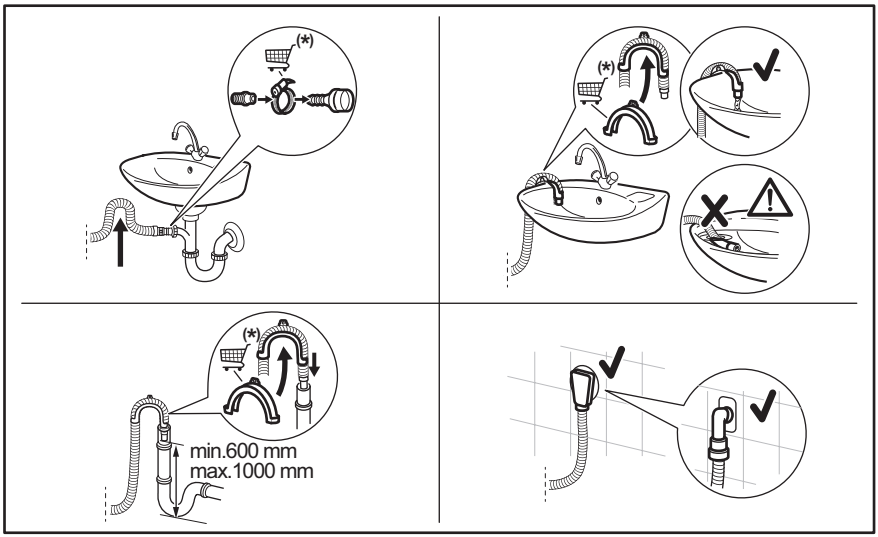

* Subject to change spare parts without notice.

Make sure that the drain hose makes a loop to prevent particles going into the appliance from the sink.

Connect the drain hose to the spigot and tighten it with a clamp. Make sure that the drain hose makes a loop to prevent particles going into the appliance from the sink.

Position the hose directly to a built-in drain pipe in the room wall and tighten it with a clamp.

Without the plastic hose guide, to a sink spigot- Put the drain hose in the spigot and tighten it with a clamp.

The drain hose can be bent into U shape and put around the plastic guide. On the edge of a

sink - Fasten the guide to the water tap or to the wall.

ⓘ

Make sure that the plastic guide cannot move when the appliance drains and the drain hose end is not immersed in the water. There may be a return of dirty water into the appliance.
Buy accessories from authorised supplier.

To a stand pipe with vent hole - Insert the drain hose directly into a drain pipe or stand pipe

ⓘ

The end of the drain hose must always be ventilated , i.e. the inner diameter of the drain pipe (min. 38 mm - min. 1.5") must be larger than the external diameter of the drain hose.

5.3 Wooden Floor installation

If you install the appliance in a wooden floor please make sure to use fixing plates to secure appliance feet.

Read carefully the instructions supplied with the accessory.

5.4 Electrical connection

At the end of installation you can connect the mains plug to the mains socket.

The rating plate and the 'Technical Data' chapter indicate the necessary electrical ratings. Make sure that they are compatible with the mains power supply.

Check that your domestic electrical installation can take the maximum load required, also taking into account any other appliances may also be in use.

Connect the appliance to an earthed socket.

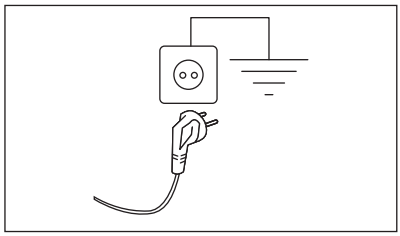

The power supply cable must be easily accessible after installing the appliance.

For any electrical work required to install this appliance, contact our Authorised Service Centre.

The manufacturer does not accept any responsibility for damage or injury through failure to comply with the above safety precaution.

6. CONTROL PANEL AND SMARTSELECT

6.1 Control panel description

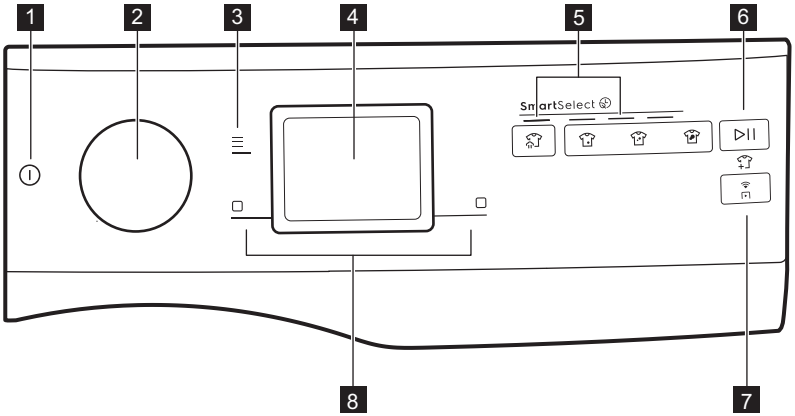

1. On/Off touch key
2. Programme dial
3. Menu touch key
4. Display
5. SmartSelect washing touch key:
   - Steam Refresh touch key
   - Extra Light touch key soil level
   - Light touch key soil level
   - Normal touch key soil level
6. Start/Pause touch key and add garments symbol
7. Remote Start Mode touch key
8.
   - Right soft key
   - Left soft key

6.2 SmartSelect

SmartSelect is a new and unique feature that allows the user to select the correct washing settings based on the soil level of the fabrics, taking care of the garments and enhancing the user experience.

The washing temperature adapts to each SmartSelect level according to the selected cycle to ensure the best performance, without the need to change the temperature manually.

For more details refer to SmartSelect section in "Dials and button" chapter.

6.3 SmartLeaf feedback

SmartLeaf feedback shows how energy-efficient a programme is, based on energy consumption.

There are three different level of SmartLeaf feedback indicated by the leaf icon:

1. No leaf lit indicates an average consumption level.
2. One leaf icon indicates a good consumption level.
3. Two leaves icon indicates the best consumption level.

6.4 Main symbols legend

Symbol	Description	Symbol	Description
	Prewash indicator.		Rinse Hold indicator.
	Extra Rinse indicator.		Favourite indicator.
	Steam indicator.		Steam Anticrease indicator.
	Wi-Fi connection indicator.		SmartLeaf indicator.
	Finish in indicator.		Silent indicator.
	Child Lock indicator.		Door locked indicator.
	Notification indicator.		Drum clean indicator.

7. DIAL AND BUTTONS

7.1 On/Off ⏻

Press and hold briefly this button for a few seconds to activate or deactivate the appliance. A dedicated jingle sound while switching the appliance on or off, lights and display switches on and Start/Pause button led pulse.

ⓘ

The default selected programme, at machine switch on, is always the Eco 40-60 programme, also after wake up from standby.

7.2 Programme dial

By rotating the programme dial it is possible to select the desired programme.

Navigate through the programmes

In the display, by turning the dial, several dots representing the available programmes are visible.

- By turning to the right or to the left it is possible to reach the saved programmes or scroll through the entire list.

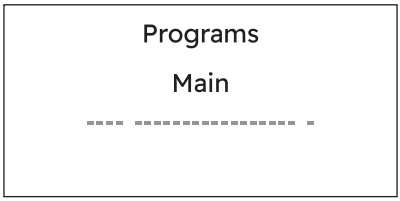

- Turn the dial to the left until the fourth point relating to the last used programme is shown.

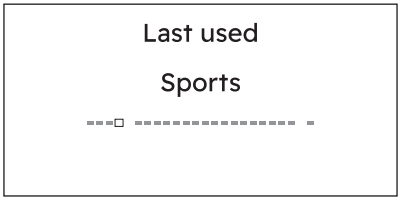

- Turn the dial further to the left to view, from point one to three, the Favorites programmes to be saved or already saved.

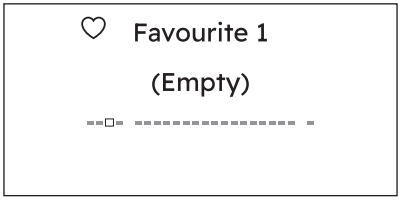

- Turn the dial to the right to scroll through the entire programme list until the last separate point is reached, which represents access to the additional programme list.

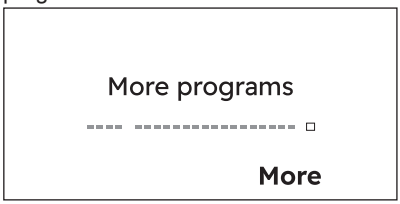

Tap the right soft key ☐ next to More indication to enter the extra programmes list. Navigating this list works just like navigating the main list.

- To go back to the main list, turn the dial to the left to reach Back to main list position and press the left soft key ☐ next to <Back indication.



In this view, the last dot represent the reset list position.

7.3 Menu ☰

Tap the ☰ button to enter inside the option Menu.

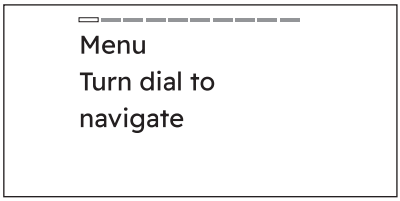

Turn the dial to navigate. To activate/ deactivate an option tap the right soft key touch button.

To exit the Menu ☰ user shall:

- press the menu button again;
- press the SmartSelect button;
- press the remote button;
- wait a timeout of 10 seconds.

7.4 Right/Left soft keys ☐

The two soft keys ☐ buttons are located on the right and the left of the display.

Tap the right soft key ☐ to prompt the action that appears on the right bottom of the display (ex. adjust spin speed, activate or deactivate autodose tank, go back in the menu,..).

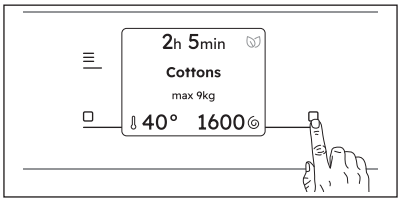

Tap the left soft key ☐ to prompt the action that appears on the left bottom of the display (ex. adjust temperature, activate or deactivate an option,...)

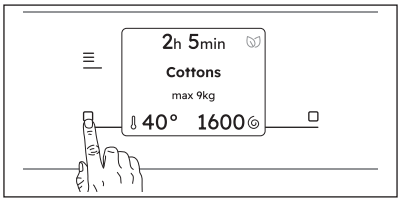

7.5 Remote Start Mode

A quick touch of this button activates the Remote Start function that allows you to start, pause and stop the appliance remotely.

Activating the Remote Start Mode function will lock the door and the machine goes in a stand-by status.

To exit this state, tap again the button and turn it off.

7.6 Start/Pause ▷||

Tap the Start/Pause ▷|| button to start, pause the appliance or interrupt a running programme.

A message in the display inform you that the cycle can pause to add or remove garments. Read the 'Opening the door - Adding garments' section for more details.

7.7 SmartSelect

Washing
This new feature has been created to guide the user to save energy, time and water improving the care of fabrics and consumer experience.

For each washing cycle it is possible to have different durations and consumption, based on the level of soiling of the laundry.

For each programme the appliance suggest a default soil level with a specific temperature. If you change the temperature manually, the soil level could change.

There are four possible options:

1. **Steam Refresh**
   With this SmartSelect level the user selects Steam Refresh programme.
   It can reduce wrinkles and light odours and will refresh clothes that does not need a wash.
   Multiple tapping on the icon allows to manage three different cycle durations.
2. **Extra Light**
   This option is recommended for very lightly soiled clothing, without visible stains. The suggested temperature is 20°C.
3. **Light**
   This option is ideal for everyday light soiled clothes, with small stains for example sweat. The suggested temperature is 30°C.
   The light soil level is the one being used most in the default setting.
4. **Normal**
   This option is recommended for normal/ heavy soiled clothes, with for example food spills or mud.

To activate one of this options turn the dial to select the desired programme. The default soil level icon light on.

To change it tap on the related icon.

To activate one of this options turn the dial to select the desired programme.
The default soil level icon light on.
To change it tap on the related icon.

Every SmartSelect level can modify temperature, spin speed and programme duration of the selected cycle.

If a certain soil level is not available, pressing it will generate an error, a double beep and symbol blinks twice.

8. FIRST TIME START-UP

Each time you turn the appliance on, the Start-up Screen appears on the touch screen.

The first time you turn the appliance on, after the Start-up Screen you are guided through the initial setup procedure.

8.1 Discover your appliance

The first time you turn the appliance on, the display guided through some information related to the appliance.

If user skipped it during first power on, it will show again on the next power up after start up. If user has press skipped for the second time, do not show anymore.

8.2 Language setup

Scroll through the list of languages by rotating the knob to find the desired language and select it by pressing the right soft key.



8.3 Water Hardness

The display suggests to set the proper water hardness level to improve the washing results.

The following window pops up:

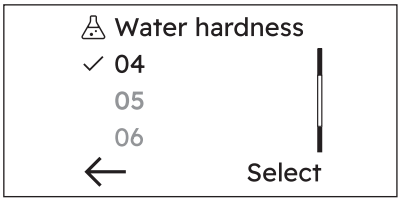

Rotate the knob to select the right level and tap on the right soft key to confirm the default setting.

Tap on the left soft key to return to the previous view.

9. BEFORE FIRST USE

During installation or before first use you may observe some water in the appliance. This is a residual water left in the appliance after a full functional test in the factory to ensure the appliance is delivered to customers in perfect working order and is no cause for concern.

1. Make sure that all transit bolts have been removed from the appliance.
2. Make sure that the electrical power is available and the water tap is open.
3. Make sure that there is salt in the compartment marked by Salt and set the proper water hardness level. Refer to "How to set the water hardness level".
4. Pour 2 litres of water into the detergent compartment marked by II.

This action activates the drain system.

5. Pour a small quantity of detergent into the compartment marked by II.
6. Set and start a programme for cotton at the highest temperature without any laundry in the drum.

This removes all possible dirt from the drum and the tub.

10. THE WATER SOFTENER (COLOURCARE)

10.1 Introduction

The water contains harsh minerals. The higher the content of these minerals the harder the water is.

Hard water can reduce the effectiveness of the detergent, reduce the softness of fabrics and contribute towards shrinkage and colour fading.

This appliance is equipped with a water softener able to provide the right degree of water softening to preserve the fabric integrity, colour brightness and ensuring good wash performances at low temperature.

The water softener should be adjusted according to the water hardness of your inlet water. A correct setting allows to achieve the best washing results and the maximum garments protection.

To set the water softener correctly, please refer to 'How to set the water hardness level'.

ⓘ

The first time you turn the appliance on, the touch screen proposes different settings: one on this is Water Hardness level.

10.2 How to set the Water Hardness level and activate Water Softener

The appliance allows you to chose between 7 levels corresponding to 7 different ranges of water hardness.

Depending on the country, the water hardness is expressed in equivalent scales: e.g. French degrees (°f), German degrees (°d), English degrees (°e), mmol/l and ppm.

If necessary, please contact your local water authority to check the water hardness in your area.

Check in the "Water hardness levels" table which is the proper level.

To set the water hardness level:

1. Press the **On/Off** ⏻ button for a few seconds to activate the appliance.
2. Rotate the dial through the programmes list until the end to find **Settings**.

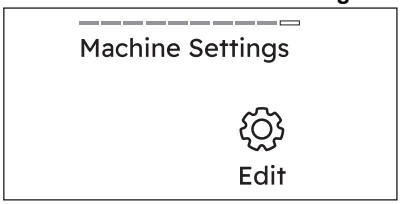

3. Tap on Edit, the right soft key ▢, to enter the setting list.
4. Scroll the list to find **Water Hardness**.

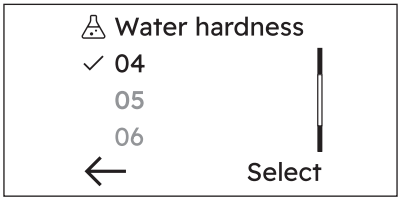

5. Tap on Edit, the right soft key ▢, to enter the setting list. To select de desired level:
   - Tap the left soft key ▢ next to ﹀ indicator to decrease hardness.
   - Tap the right soft key ▢ next to ﹀ indicator to increase hardness.
6. Rotate the dial one position more to find Water Softener setting

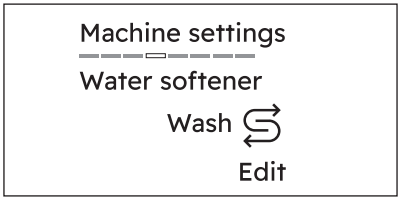

7. Tap on Edit, the right soft key ▢, to enter the setting list.
8. Rotate the dial to visualize the options:
   - **OFF** : to deactivate the water softener.
   - **Wash** : the water softener acts during washing phase only. This setting satisfies most of the use condition.
   - **Wash + Rinse**: if the inlet water is particularly hard (**6** and **7** levels), we suggest to set the water softener also during rinsing phase to preserve the fabric softness.

ⓘ

This setting increases the salt consumption.



9. Tap on the right soft key ▢, Select, to confirm.

10. Tap on the left soft key ▢, ←, to display the previous view.

Water hardness levels

Levels	Levels as indicated on the tester[1)]	Water hardness range				
		°f (French degrees)	°d (German degrees)	°e (English degrees)	mmol/l	ppm
1	C01	≤5	≤3	≤ 4	≤0.5	≤ 50
2	C02	6 - 13	4 - 7	5 - 9	0.6 - 1.3	60 - 130
3	C03	14 - 21	8 - 11	10 -15	1.4 - 2.1	140 - 210
4[2)]	C04	22 - 29	12 - 16	16 - 20	2.2 - 2.9	220 - 290
5	C05	30 - 37	17 - 20	21 - 26	3.0 - 3.7	300 - 370
6	C06	38 - 45	21 -25	27 - 32	3.8 - 4.5	380 - 450
7	C07	≥46	≥26	≥33	≥4.6	≥460

1) If supplied with the appliance.

2) Factory setting, able to satisfy most of the use conditions.

10.3 Refill salt

The water softener function acts through special resins present in the appliance.

To regenerate the resins and make them ready to soften the water pour a special salt in the compartment Salt:

1. Open the detergent dispenser.

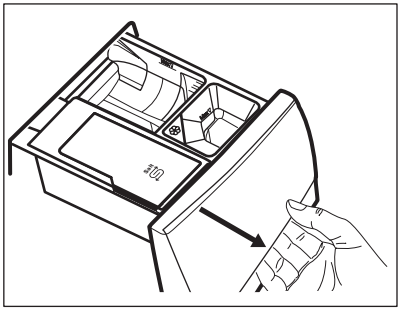

2. Open the compartment Salt.

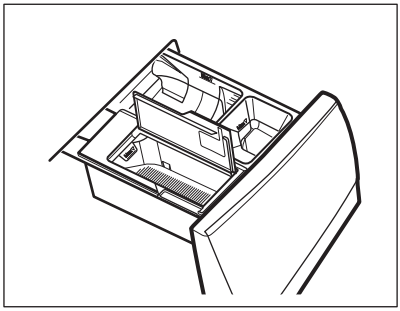

3. Pour the special salt.

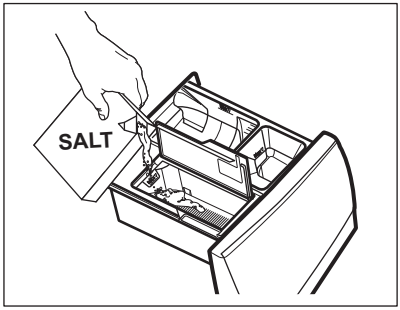

4. Close the salt compartment and the detergent dispenser.

Regularly check if there is enough salt.

The compartment Salt can contain about 600 gr of salt that are sufficient for about two months if the default water hardness level (**C04**) is set and the water softener is activated during wash phase only. A different water hardness level or different setting may increase or decrease the salt consumption. Refer to 'How to set the water hardness level' and 'How to set the water softener also during rinse phase'.

The display shows the message **Refill salt** at the end of a cycle when compartment needs to be refilled with salt, even if a little salt still remains.

⚠ WARNING!

Pour the salt in the compartment Salt only.

⚠ WARNING!

Do not put anything but salt in the compartment Salt. If any other detergent/ additive is poured inadvertently in this compartment, please refer to 'Eliminating detergent or other additives from salt compartment' in 'Troubleshooting' chapter.

Only use special salt for dishwasher and/or washing machine. The proper salt can be ordered from the web site!
Other types of salts are less efficient and over time could damage the water softener technology permanently.

⚠ WARNING!

Do not use fine salt!

The appliance works exploiting its full potential with salt. Salt refilling when required by the appliance maintains the softening system efficient. If you use the appliance without salt for a long time, once the salt is finally refilled, the water softener function is completely restored after a few long washing cycles.

10.4 Water softener regeneration

After a few cycles, the appliance may need to regenerate the water softener.

The regeneration process is automatically ensured when running programmes such as Cottons and Synthetics routinely even if the programme duration is reduced by tapping the Finish in button once, if available in the appliance.

Other programmes may perform the regeneration process automatically, when settings and conditions allow it.

If you usually run very short cycles, the regeneration process may not occur: you could see that salt has not been used, since it is consumed during regeneration phase only.
To ensure the regeneration process **run a Cottons or a Synthetics programme once a week or every two weeks at least**.

11. PROGRAMMES

11.1 Programme Chart

Washing programmes

Programme	Programme description
Washing programmes	
Eco 40-60	**Low energy cycle for cotton items washable at 40 or 60°C.** No option can be activated. Decreases temperature and extends time to reach good washing results.**1)**
UltraQuick 39min	**Cotton and mixed synthetic fabrics.** Ideal to wash your daily load in a short time, for a better clothes care and good cleaning already at 30°C. ⓘ The standard programme duration has been developed on a laundry of 5 kg. If you wash a smaller or bigger load the washing time automatically decreases or increases.
Cottons	**White cotton and coloured cotton**. Normal and heavy soil.
Synthetics	**Synthetic items or mixed fabric items.** Normally soiled items.
Delicates	**Delicate fabrics such as acrylics, viscose and mixed fabrics requiring gentler washing .** Normal soil.
Wool/Silk	**Machine washable wool**, hand washable wool and other fabrics with «hand washing» care symbol.**2)**
Rapid 20min	**Cotton and synthetic items** lightly soiled or once worn.
Sportswear	**Sport outfit, synthetic fibres like polyester, polyester/elastane blends, polyamide.** Suitable to remove sweat and body soil from technical sport garments.
Jeans	**Denim clothing normally soiled.** This programme performs a gentle rinsing phase, designed for denim, that reduces fading and does not cause washing powder residues on the fibres.
Outdoor	ⓘ Do not use fabric softener and make sure that there is no softener residue in the detergent dispenser. **Outdoor clothing, technical, sport fabrics, waterproof and breathable jackets, shell jackets with a removable fleece or inner insulation.** This programme can also be used as water-repellent restoring cycle, specifically tailored for treating clothes with a hydrophobic coating. To perform the water-repellent restoring cycle, proceed as follows: - Pour the washing detergent in the washing compartment. - Pour a special water-repellent restorer for fabric in the drawer compartment for fabric softener. - Reduce the laundry load to 1 kg. To further improve the water-repellent restoring action, dry the laundry in a tumble dryer by setting the Outdoor drying programme (if available and if the garment care label permits tumble drying).

Programme	Programme description
Down Jackets	**Special programme for a single feather/down jacket or duvet,** also with synthetic filling. For products with natural feather and down filling use liquid wool detergent. If the garment care label allows it, run a complete wash and dry cycle to preserve appearance and thermal functionality.
Hygiene	**Certified by Swissatest**, combines a wash cycle and steam to remove more than 99,99% of bacteria and viruses* above 60°C. **3)** Pollen and allergens are also reduced for hygienically clean clothes after every wash.
Silk	**Machine and hand washable silk and other delicate fabrics.** Drum movements are so gentle that is possible to treat even very delicate garments.
Duvet	**Special programme for synthetic or feather and down filled blanket, duvet, bedspread and so on.** Use liquid delicate detergent, like wool detergent.
Machine Clean	**Maintenance cycle with hot water to clean and freshen the drum and to remove residue that may cause odour.** Before running this cycle, remove all items from the drum. In the washing phase compartment of the detergent dispenser, put the flap of the compartment in upward position. Pour a cup of chlorine bleach or a washing machine cleaner in the washing phase compartment. **DO NOT** use both together. ⓘ After the drum cleaning, run a further rinse cycle with empty drum and no detergent to remove any residue of bleach.
Spin/Drain	**All fabrics, except woollens and very delicate fabrics.** To spin the laundry and to drain the water in the drum.
Rinse	**All fabrics, except woollens and very delicate fabrics.** Programme for rinsing and spinning the laundry. The default spin speed is the one used for cotton programmes. Reduce the spin speed according to the type of laundry. If necessary, set the Extra Rinse option to add rinses. With a low spin speed, the appliance performs delicate rinses and a short spin.

1) According to EU Regulation 2019/2023 this programme at 40°C is able to clean normally soiled cotton laundry declared to be washable at 40°C or 60°C, together in the same cycle. For the reached temperature in the laundry, the programme duration and other data, please refer to "Consumption Values" chapter.

2) During this cycle the drum rotates slowly to ensure a gentle wash. It can seem that the drum doesn't rotate or doesn't rotate properly, but this is normal for this programme.

3) Tested for Staphylococcus aureus, Enterococcus faecium, Candida albicans, Pseudomonas aeruginosa and MS2 Bacteriophage in external test performed by Swissatest Testmaterialien AG in 2021 (Test Report No. 202120117).

Programme temperature, maximum spin speed and maximum load

Programme	Default temperature Temperature range	Reference spin speed Spin speed range	Maximum load
Eco 40-60	**1)** **2)**	1400 rpm 1400 rpm - 400 rpm	10.0 kg
UltraQuick 39min	30 °C 60 °C - Cold	1400 rpm 1400 rpm - 400 rpm	8.0 kg
Cottons	40 °C 90 °C - Cold	1400 rpm 1400 rpm - 400 rpm	10.0 kg

Programme	Default temperature Temperature range	Reference spin speed Spin speed range	Maximum load
Synthetics	30 °C 60 °C - Cold	1200 rpm 1200 rpm - 400 rpm	5.0 kg
Delicates	30 °C 40 °C - Cold	800 rpm 1200 rpm - 400 rpm	2.0 kg
Wool/Silk	40 °C 40 °C - Cold	1200 rpm 1200 rpm - 400 rpm	3.0 kg
Rapid 20min	20 °C 20 °C - Cold	1200 rpm 1400 rpm - 400 rpm	3.0 kg
Sportswear	30 °C 60 °C - Cold	1200 rpm 1200- 400 rpm	5.0 kg
Jeans	30 °C 40 °C - Cold	800 rpm 1200 rpm - 400 rpm	4.0 kg
Outdoor	30 °C 40 °C - Cold	1200 rpm 1200 rpm - 400 rpm	2.0 kg **3)** 1.0 kg **4)**
Down Jackets	30 °C 40 °C - Cold	1200 rpm 1200 - 400 rpm	2.0 kg
Hygiene	60 °C	1400 rpm 1400 rpm - 400 rpm	10.0 kg
Silk	30 °C	800 rpm 800 rpm - 400 rpm	0.5 kg
Duvet	30 °C 40 °C - Cold	800 rpm 800 - 400 rpm	3.0 kg
Machine Clean	60 °C	1200 rpm 1200 rpm - 400 rpm	-
Spin/Drain	-	1400 rpm 1400 rpm - 400 rpm	10.0 kg
Rinse	-	1400 rpm 1400 rpm - 400 rpm	10.0 kg

1) The temperature of this programme is not visible on the display and it is automatically set.

2) According to Commission Regulation EU 2019/2023, this programme at 40 °C is able to clean normally soiled cotton laundry declared to be washable at 40 °C or 60 °C, together in the same cycle.

For the reached temperature in the laundry, the programme duration and other data, please refer to 'Consumption Values' chapter.
The most efficient programmes in terms of energy consumption are generally those that perform at lower temperatures and longer duration.

3) Washing programme.

4) Washing programme and water repellent phase.

Programme options compatibility

The options are not selectable with all washing programmes, an option can exclude another one. In this case the appliance doesn't allow you to set the incompatible preference together.
Make sure the screen and the soft keys are always clean and dry.

When you set a washing programme and enter the Menu, the display shows the available options.
Child Lock and **Finish in** are selectable with all programmes.

	Eco 40-60	UltraQuick 39min	Cottons	Synthetics	Delicates	Wool/Silk	Rapid 20min	Sportswear	Jeans	Outdoor	Down Jackets	Hygiene	Silk	Duvet	Machine Clean	Spin/Drain	Rinse
Spin Speed	■	■	■	■	■	■	■	■	■	■	■	■	■	■	■	■	■
Rinse Hold	■	■	■	■	■	■		■	■	■	■	■					■
No Spin																■ 1)	■
Prewash			■	■				■									
Extra Rinse		■	■	■	■			■	■	■	■	■					■
Steam Anti-crease		■	■	■				■	■			■					
Silent			■	■	■			■	■								
Finish in	■	■	■	■	■	■	■	■	■	■	■	■	■	■	■	■	■

1) If you set the No Spin option, the appliance performs draining only.

Suitable detergents for washing programmes

Programme	Universal powder[1)]	Liquid Universal	Liquid for coloureds	Delicates woollens	Special
Eco 40-60	▲	▲	▲	--	--
Cottons	▲	▲	▲	--	--
Synthetics	▲	▲	▲	--	--
Delicates	--	--	--	▲	▲
Wool/Silk	--	--	--	▲	▲
Rapid 20min	--	▲	▲	--	--
Sportswear	--	▲	▲	--	▲
Jeans	--	--	▲	▲	▲
Outdoor	--	--	--	▲	▲
Down Jackets	--	▲	▲	--	▲
Hygiene	▲	▲	--	--	▲
Silk	--	--	--	▲	▲
Duvet	--	--	--	▲	▲
Running Shoes	--	▲	▲	--	--
Pet Hair	▲	▲	▲	--	--
Baby	▲	▲	▲	--	--
Linen	--	▲	▲	--	--
Curtains	--	▲	▲	--	--
Business Shirts	▲	▲	▲	--	--

1) At temperature higher than 60 °C the use of powder detergent is recommended.

▲ = Recommended | -- = Not recommended

11.2 More Programmes

Washing programmes

Programme	Programme description
Washing programmes	
Towels	Cotton towels and bathrobes. Ideal for normal and heavy soil.
Training Gear	Suggested for small load made up of sport and fitness clothes.
Soccer/Rugby	Soccer and rugby outfit with polyester, polyester/elastane blends, polyamide and microfiber materials. Special cycle designed for fresh stains with integrated prewash phase.
Skiing Gear	Perfect for heavy garments such as sking jackets and mountains clothes.
Running Shoes	Designed for running shoes, gently wash programme.

Programme	Programme description
AntiAllergy Vapour	White cotton items. This high-performance wash programme combined with steam vapour, removes more than 99,99% of bacteria and viruses **1)** keeping the temperature above 60°C throughout the washing phase; with an additional action on the fibers thanks to a vapour phase, an enhanced rinsing phase ensures a proper removal of detergent and micro-organism residues. This programme ensures also a proper reduction of pollens/allergenic items.
Pet Hair	Washing programme tailored for removing pet hair from items
Pillow	Designed to dry 2 sofa pillows or 1 bed pillow. It is recommended to wash bed pillows with own pillowcase. To be updated with some indication on dimensions.
Baby	Special quick cycle for baby items with good washing and rinsing performance.
Linen	Special delicate cycle tailored for white or coloured linen/flax fibre items.
Curtains	Special programme for curtains. The prewash phase is activated automatically**2)**.
BedLinen XL	Washing cycle for three bedlinen sets, one of which can be double size.
Easy Iron	Cotton, synthetic and mixed fabrics items requiring a gentle wash. Normal and light soil**3)**.
1 Item Fast	Cotton and synthetic item lightly soiled.
Steam Refresh	**Cotton, synthetic and mixed items**. Special steam cycle without washing that can be used to prepare your dried laundry for ironing or refresh garments worn once. This programme reduces creases, odours and relaxes the fibres. Do not use any detergent.
Steam Cashmere	Wool and cashmere. Short programme to refresh hand washable woolen and cashmere garments without washing. When treating smaller loads, the programme duration can be further reduced by means of the Finish in option.
Business Shirts	Cotton and mixed cotton shirts, normally soiled with steam finish to facilitate ironing. When the programme is finished immediately remove the garment on a hanger for air drying for the best results.

1) Tested for Staphylococcus aureus, Enterococcus faecium, Candida albicans, Pseudomonas aeruginosa and MS2 Bacteriophage in external test performed by Swissatest Testmaterialien AG in 2021 (Test Report No. 202120117).

2) Do not use any detergent for prewash phase to rinse only with water.

3) To reduce creasing, this cycle regulates the water temperature and performs a soft wash and spin phase. The appliance adds some rinses.

Programme temperature, maximum spin speed and maximum load

Programme	Default temperature Temperature range	Reference spin speed Spin speed range	Maximum load
Towels	40 °C 90 °C - Cold	1400 rpm 1400 rpm - 400 rpm	4.0 kg
Training Gear	30 °C 40 °C - Cold	1200 rpm 1200 rpm - 400 rpm	1.0 kg
Soccer/Rugby	40 °C 60 °C - Cold	1200 rpm 1200 rpm - 400 rpm	5.0 kg

Programme	Default temperature Temperature range	Reference spin speed Spin speed range	Maximum load
Skiing Gear	30 °C 40 °C - Cold	1200 rpm 1200 rpm - 400 rpm	2.0 kg
Running Shoes	30 °C 40 °C - Cold	1000 rpm 1000 rpm - 400 rpm	1.0 kg
AntiAllergy Vapour	60 °C	1400 rpm 1400 rpm - 400 rpm	10.0 kg
Pet Hair	30 °C 60 °C - Cold	1200 rpm 1200 rpm - 400 rpm	2.0 kg
Pillow	30 °C 40 °C - Cold	800 rpm 800- 400 rpm	3.0 kg
Baby	30 °C 60 °C - Cold	1400 rpm 1400 rpm - 400 rpm	4.0 kg
Linen	30 °C 40 °C - Cold	1200 rpm 1200 rpm - 400 rpm	2.0 kg
Curtains	30 °C 40 °C - Cold	800 rpm 1200 - 400 rpm	2.0 kg
BedLinen XL	30 °C 60 °C - Cold	1200 rpm 1200 rpm - 400 rpm	4.5 kg
Easy Iron	40 °C 60 °C - Cold	800 rpm 800 rpm - 400 rpm	4.5 kg
1 Item Fast	20 °C 20 °C - Cold	1200 rpm 1400 - 400 rpm	0.5 kg
Steam Refresh	-	-	2.0 kg
Steam Cashmere	-	-	2.0 kg
Business Shirts	30 °C 60 °C - Cold	1400 rpm 1400 rpm - 400 rpm	2.0 kg

Programme options compatibility

ⓘ

The options are not selectable with all washing programmes, an option can exclude another one. In this case the appliance doesn't allow you to set the incompatible preference together.
Make sure the screen and the soft keys are always clean and dry.

ⓘ

When you set a washing programme and enter the **Menu** ☰, the display shows the available options.
🔒 **Child Lock** and 🕒 **Finish in** are selectable with all programmes.

	Towels	Training Gear	Soccer/Rugby	Skiing Gear	Running Shoes	AntiAllergy Vapour	Pet Hair	Pillow	Baby	Linen	Curtains	BedLinen XL	Easy Iron	1 Item Fast	Steam Refresh	Steam Cashmere	Business Shirts
Spin Speed	■	■	■	■	■	■	■	■	■	■	■	■	■	■			■
Rinse Hold	■	■		■	■	■	■		■	■	■		■				■
Silent	■	■			■		■			■	■						
No Spin															■	■	
Prewash	■	■			■	■	■						■				
Extra Rinse	■	■	■	■	■	■	■		■	■	■	■	■				■
Steam Anti-crease	■	■				■	■		■	■		■	■		■	■	
Finish in	■	■	■	■	■	■	■	■	■	■	■	■	■	■	■	■	■

11.3 Steam programmes

The Steam programmes can be used for reducing wrinkles and odours on garments (such as cottons, synthetics, mixed fabrics, including delicates) that just need to be refreshed, in a short time, avoiding washing.

The fabric fibres are relaxed and afterwards ironing becomes effortless. When the cycle is completed, quickly remove the laundry from the drum.

DO NOT set this mode with the following type of items:

- Items that are not suitable for tumble drying.
- Items with label "Dry clean only".

ⓘ

Do not use any detergent!
The Steam programmes do not remove particularly intense odour and do not perform any hygienic cycle.
After the steam treatment the laundry can be humid. Hang items out for a few minutes.

The fragrance (Electrolux Steam Fragrance)

The Electrolux Steam Fragrance allows you to refresh even your delicate clothes, removing wrinkles and adding freshness with a gentle fragrance developed exclusively by **Electrolux**. By refreshing your garments with

steam, rather than running full wash cycles, you will keep your clothes looking and feeling new longer. You can even safely use the fragrance with Cashmere and Steam programmes - if they are available - for delicate fabrics like cashmere and wool. When treating smaller load reduce the fragrance dosage and the cycle duration: in only fifteen minutes, your clothes will regain that "just washed" feeling.

Read carefully the instructions supplied with the fragrance.

DO NOT:

- Tumble dry the garments treated with fragrance. Its benefit would evaporate.
- Use the fragrance with different purposes than those here described.
- Use the fragrance on new garments. New garments may contain residual finishing compounds which are not compatible with it.

The fragrance is available on **Electrolux** web shop or by authorised dealer.

11.4 Woolmark Premium Wool Care - Green



The wool wash cycle of this machine has been tested and approved by The Woolmark Company for the washing of wool garments labelled as «hand wash» provided that the products are washed according to the instructions on the garment label and those issued by the manufacturer of this washing machine.
M2304

12. WI-FI - CONNECTIVITY SETUP

This chapter describes how to connect the smart appliance to the Wi-Fi network and to link it to mobile devices.

By this functionality you can receive notifications, control and monitor your appliance from your mobile devices.

The Wi-Fi functionality is off as factory default setting.

To connect the appliance to enjoy the full range of features and services you need:

- Wireless network at home with internet connection enabled.
- Mobile device connected to wireless network.

Wi-Fi module parameters	
Frequency	2.412 - 2.472 GHz for European market
Protocol	IEEE 802.11b/g/n
Max Power	<20 dBm
Encryption	WPA, WPA2, WPA3

12.1 QR code on rating plate

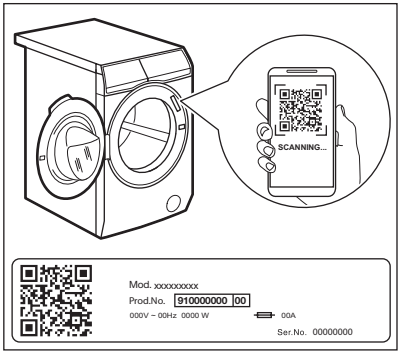

QR code can be used in two ways:

- Scan the QR code with the built-in camera app to download our app from the App store on your smart device and follow the required steps.
- Pairing your smart device with appliance to simplify the process. Scan the QR code with QR code scanner built-in our app.

12.2 Installing and configuring the App

The App allows you to control your laundry through a mobile device.
It contains a large number of programmes, useful features and product information tailored perfectly to the appliance.
Through the app you can select the programmes already available from the appliance control panel, plus unlock additional programmes available only from a mobile device.
Additional programmes can change over the time along with new versions of the app.
It's personalized laundry care - all from your mobile device.

When connecting the appliance to the application, stand near it with your mobile device.

Make sure that your mobile device is connected to the wireless network.

1. Go to the App Store on your smart device or scan QR code (*see 'QR code on rating plate' paragraph*).
2. Download and install our app.
3. Start the application. Select the country and language and login with Your email and password. If you do not have an account, create a new one following the instructions in the App.
4. Follow the instructions on the App for the appliance registration and configuration.

12.3 Wi-Fi appliance connection

Turning On Wi-Fi

As factory default, the Wi-Fi feature is Off.

Tap the On/Off ⏻ button for a few seconds to activate the appliance.

To connect the appliance to a Wi-Fi network, tap and hold the Remote Start Mode key button for 5 seconds. It is also possible to enable Wi-Fi from the settings menu.

During this phase, the display shows Wi-Fi icon and "**Starting up...**" message. After a while **Ready to connect**" message and icon appear.

Connecting your appliance

Before proceeding with next steps, be sure that the App has been downloaded and configured and you smart device connected to your home network. Refer to "Installing and configuring the App" paragraph.

Open the App from your smart device and follow the instruction displayed to add your appliance.

During association phase, the App could redirects to the smart device Wi-Fi settings to select the home network and requires to enter the Wi-Fi password to connect the appliance.

After **Connecting...** phase, if successfully concluded, "**Connection successful**"

message is shown. Otherwise, the message "**Can't connect**" is displayed.

Once connected, tapping on the Remote Start Mode key button on will enable users to be able to start cycles remotely on the App.

Auto connection to registered network
Once the appliance has been successfully set-up and registered to the home network, every time it is powered on, it will try to connect to the network automatically. There will not be any sound when Wi-Fi connection is successful.

Connecting to a different network (Reopening Access Point)
Every time user tap and hold Remote Start Mode key button for 5 seconds, the access point will be open and broadcasted. New network credentials received at this point will overwrite previously saved credentials, and the appliance then connects to the new Wi-Fi network.

Refer to "Connection your appliance" section to perform the connection.

Turning Off Wi-Fi
If the user decides to no longer connect the appliance to Wi-Fi, he can tap and hold Remote Start Mode key button for 10 seconds and the appliance will reset and turn off. It is also possible to disable Wi-Fi from the settings menu.

After confirming the reset the display shows the message "**Network is reset**" and the Wi-Fi is set off.

12.4 Over-the-air update

The App may propose an update for your appliance.

If a programme is running, the App notifies that the update will start at the end of the programme.

During the update, the appliance shows a message in the display.

Do not switch off or unplug the appliance during update.

The appliance will be usable again at the end of the update, without any notification about successful update.

If an error occurs, the appliance shows a message in the display: just press any buttons or turn the knob to return to normal use.

12.5 Wi-Fi Always On

The Wi-Fi Always On function is available in the App.

This function keeps the appliance connected to the network even when the appliance is turned off.

The indicator goes on and off intermittently.

It is possible to turn the appliance on by pressing the On/Off button or through the App.

> The Wi-Fi Always On function may affect your energy consumption.

13. OPTIONS

13.1 Introduction

Several additional options are available for each programme. Check compatibility in the programme table section.

> After 10 seconds of inactivity the displays shows the home screen with selected programme.

13.2 Soft Key options

After selecting a programme, it is possible to change the default Temperature and Spin set.

To modify the **Temperature** tap the left soft key :

- The default temperature shown will decrease to the minimum expected for the selected cycle.
- Continue pressing and the sequence will proceed from the maximum expected temperature.

If Temperature setting is not available, left soft key led will be off.

To modify the **Spin** tap the right soft key :

- The default spin shown will decrease to the minimum expected for the selected cycle.
- Continue pressing and the sequence will proceed from the maximum expected spin.

If only one option is available, right soft key led will be off.

13.3 Permanent Prewash

Use this option to add a pre-wash phase at 30 °C before the washing phase.

This option is recommended for heavily soiled laundry, especially if containing sand, dust, mud and other solid particles.

Tap on the **Menu** soft key, rotate the dial until the display shows the Prewash option.

To **activate/deactivate** this option:

- Tap the right soft key and the relevant indicator will turn On/Off.

Prewash remain active also after machine switch off and on and set by default in programme where available. The option can increase the programme duration.

13.4 Permanent Extra Rinse

With this option you can add a few rinses to the selected washing programmes and optimise the fabric softener distribution and improve the fabric softness. It is suggested when you use the fabric softener.

Useful for people allergic to detergents and in areas where the water is soft..

Tap on the **Menu** soft key, rotate the dial until the display shows the Extra Rinse option.

To **activate/deactivate** this option:

- Tap the right soft key and the relevant indicator will turn On/Off.

Extra Rinse remain active also after machine switch off and on and set by default in programme where available. The option can increase the programme duration.

13.5 Steam Anticrease

This option adds a steam phase followed by an anti-crease movement at the end of the washing programme. The steam action reduces fabric creases and facilitates the ironing.

Tap on the **Menu** soft key, rotate the dial until the display shows the Steam Anticrease option.

To **activate/deactivate** this option:

- Tap the right soft key and the relevant indicator will turn On/Off.

This option can increase the programme duration.

To **interrupt** the Steam Anticrease phase:

- Tap the On/Off ⏻ button for a few seconds to deactivate the appliance.
- Turn the programme dial in another position.

13.6 Silent

With this option the intermediate and the final spinning phases are suppressed and the programme ends with water in the drum. This helps to reduce creasing.

The door stays locked and the drum turns regularly to reduce creasing. You must drain the water to unlock the door.

As the programme is very quiet, it is suitable for use at night time when cheaper electricity tariffs are available. In some programmes the rinses are performed with more water.

Tap on the **Menu** ☰ soft key, rotate the dial until the display shows the Silent option.

To **activate/deactivate** this option:

- Tap the right soft key ☐ and the relevant indicator will turn On/Off.

If you touch the Start/Pause button, the appliance performs the only draining phase.

> ⓘ
>
> The appliance empties the water out automatically after 18 hours approximately.

13.7 Finish in

With this option you can set the time to end of the selected cycle.

> ⓘ
>
> The proposed time to finish in is always higher than the programme duration.

To **activate** this option:

- Tap on the **Menu** ☰ soft key, rotate the dial until the display shows the Finish in option.



- You can activate this option by pressing the right soft key ☐. The display shows the hours of the time to end starting from 3 hours.

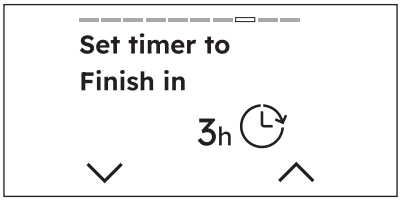

- Pressing the right soft key ☐ next to ∧, it is possible to increase the time by one hour with each tap, up to 24 hours.

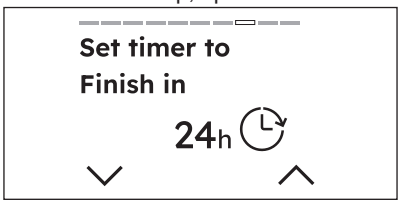

- If you want to decrease time tap the left soft key ☐ next to ∨, the duration will be reduced by one hour with each tap.
- Once you have selected the desired timer wait 3 seconds and you will be redirected to the home screen where at the top of the display you will be able to see the countdown.

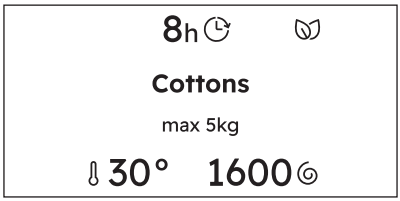

> ⓘ
>
> The appliance keeps the selection of this option after you switch it off.

To **remove** the Finish in option.:

- Navigate through the Menu ☰ to the Finish in option.
- Reduce the time by pressing the left soft key until the display shows OFF

13.8 Child Lock

With this option you can prevent the children from accidentally operating the appliance.

To **activate** this option:

- Tap on the **Menu** ☰ soft key, rotate the dial until the display shows the Child Lock option.

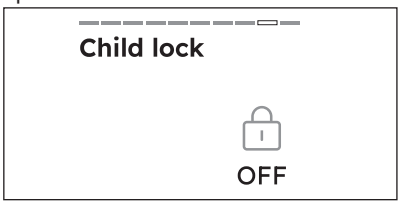

- You can activate this option by tapping the right soft key ☐.
- After you have activated the options soft keys and the touch screen are deactivated. It is possible to turn the appliance off by means of the On/Off button.
- Before pressing the Start/Pause button the appliance cannot start.

The display shows the icon Child Lock in the middle of the display.

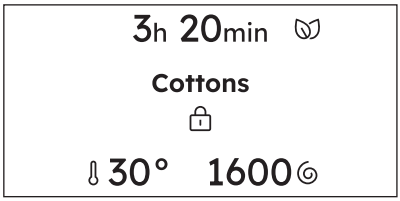

ⓘ

The appliance keeps the selection of this option after you switch it off.

To **deactivate** this option:

- Hold the right soft key ☐ for 3 seconds. A countdown is played.

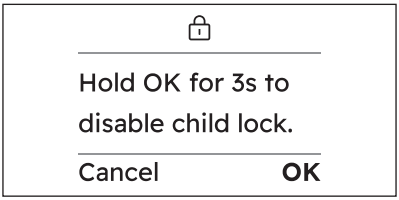

ⓘ

Once the option is deactivated the display will show the information as before activation,

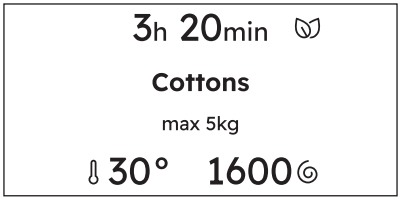

13.9 Favorites

How to set a favourite cycle
Up to three favourite cycles can be saved.

ⓘ

There are no favourite cycles saved by default.

Tap on the **Menu** soft key, rotate the dial until the display shows the Favorites option.

To **save** you favourite cycle:

- Select one of the three empty fields by tapping the right soft key ☐.
- After two seconds, the display will show the selected cycle as a favourite recognizable by a heart at the top of the screen.

ⓘ

When you want to save the next favourite the first empty slot will be indicated automatically.

How to replace a favourite cycle
It is possible to **replace** favourites:

- Turn dial to select one of the three fields to be overwritten.

- Confirm the row by tapping the right soft key ☐.
- Tap **again** the right soft key ☐ to replace the favourite.
- Confirmation popup appears, tap the right soft key ☐ to confirm.
- After two seconds, the display will show the selected cycle as a favorite recognizable by a heart at the top of the screen.

It is not possible to **delete** you favourite cycle on the appliace.

ⓘ
In order to delete favourites it is necessary to perform a factory reset of the appliance or by the app.

How to access the favourites cycle
To access the favourites from programmes list rotate the dial to the left.

ⓘ
If the fields are occupied the first favourite cycle will be displayed, then the second and eventually the third.

ⓘ
If the fields are empty, a suggestion on how to save new favourites will be displayed.

14. SETTINGS

14.1 Settings

In this paragraph are explained the main settings of the appliance.

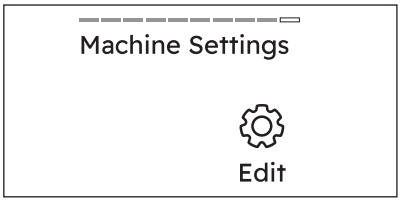

Tap on the right soft key, Edit , to access the settings.

ⓘ
After 10 seconds of inactivity the displays shows the home screen with selected programme.

14.2 Language setup

It is possible to **change the display language** by scrolling through the list rotating the knob to find the desired language.

- Select it by tapping the right soft key ☐
- Go back ← to the previous view by tapping the Menu ☰ touch key.

ⓘ
By turning the knob the selected language will be highlighted in the display.

14.3 Wi-Fi

With this option you edit Wi-Fi settings.

Tap on the right soft key ☐ to access the settings. You can:

- Enable Wi-Fi network.
- Connecting to a different Wi-Fi network
- Disable Wi-Fi network.

ⓘ
For more details refer to "Wi-Fi - Connectivity setup" chapter

14.4 Water Hardness

With this setting you can change the Water Hardness level.

To **modify** the level:

- Tap the left soft key ☐ next to ∨ indicator to decrease hardness.
- Tap the right soft key ☐ next to ∧ indicator to increase hardness.

Rotate the dial to move to the next setting.

There are seven hardness levels available.

14.5 Water Softener

With this setting you can change the Water Softener option.

- Tap the right soft key to edit the option.
- Rotate the dial to visualize the options:
  - **a.** OFF
  - **b.** Wash
  - **c.** Wash + Rinse
- Select the desired level by tapping the right soft key .

Go back to the previous view by tapping the left soft key .

14.6 Button sounds

With this setting you can turn off the sound of the buttons.

To **activate/deactivate** the sounds:

- Tap the right soft key and the relevant indicator will turn On /Off .

Rotate the dial to move to the next setting.

The sound of the On/Off button cannot be disabled

14.7 End alert

With this setting you can change the End alert .

To **activate/deactivate or modify** the sound:

- Tap the right soft key to edit the option.
- Rotate the dial to visualize the levels:
  - **a.** Long
  - **b.** Medium
  - **c.** Short
  - **d.** Off
- Tap the right soft key to select the desired sound.

Go back to the previous view by tapping the Menu touch key.

14.8 Display Brightness

With this setting you can change the Display Brightness.

To **modify** the level:

- Tap the left soft key next to indicator to decrease brightness.
- Tap the right soft key next to indicator to increase brightness.

Rotate the dial to move to the next setting.

There are five brightness levels available.

14.9 Guides

With this option you can see brief explanations of some features.

Rotate the programme dial and select by tapping the right soft key one of the following option:

- **Introduction**: information about the control panel, the SmartSelect , Steam programmes, Menu an soft keys, Remote Start Mode.
- **WiFi** : information about the onboarding

Go back to the previous view by tapping the left soft key .

14.10 Hours worked

With this setting you can view the Hours worked of your appliance.

Hours counted are not deleted by the Settings reset to factory default

14.11 Settings reset to factory default

With this setting you can reset your appliance to the factory settings.

1. Tap on the right soft key ☐ to enter the option.
2. Tap on the left soft key ☐ to undo.
3. Tap on the right soft key ☐ to confirm the reset.

Performing the reset will take a few seconds

ⓘ

Settings reset to factory default deletes permanents options and favourites saved.

15. DAILY USE

⚠ **WARNING!**

Refer to Safety chapters.

15.1 Activating the appliance

1. Connect the mains plug to the mains socket.
2. Open the water tap.
3. Press the On/Off ⏻ button for a few seconds to activate the appliance.

A short tune sounds.

15.2 Before activating the appliance

1. Make sure that the mains plug is connected to the mains socket.
2. Make sure that the water tap is open.

15.3 Activating the appliance

Press the On/Off ⏻ button to turn the appliance on. A short tune sounds.

The default selected programme, at machine switch on, is always the Eco 40-60 programme, also after wake up from standby.

The information of the selected programme are visible in the display.

The led of the Start/Pause ▷❙❙ key button flashes.

15.4 Setting a programme

The Eco 40-60 is the default proposed programme when the appliance is turned on, the one to which the information of the energy label relates.

1. Turn the programme dial to set the desired programme.
   After a few seconds the display shows programme summary view with the following information:

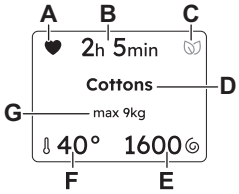

A. Favorites, if already saved.
B. Programme duration
C. SmartLeaf
D. Selected programme
E. Spin speed
F. Temperature
G. Maximum programme load.

ⓘ

Also additional options, if activated, will be visible in the display.

Tap on the different soil level of the **SmartSelect** ⏲ to the right in the control panel.

Steam Refresh programme can be selected in the SmartSelect area.

ⓘ

Every time a different SmartSelect ⏲ level is chosen it will be visible for 2 seconds in position 7.

You can also:

1. Tap on the left soft key ▢ to change the **Temperature** 🌡 .
2. Tap on the right soft key ▢ to change the **Spin** 🌀 speed.
3. Tap on **Menu** ☰ to enter the additional available options and set one or more of them.

15.5 Loading the laundry

- Open the appliance door.
- Shake the items before you put them in the appliance.
- Put the laundry in the drum, one item at a time.

Make sure not to put too much laundry in the drum.

- Close the door firmly.

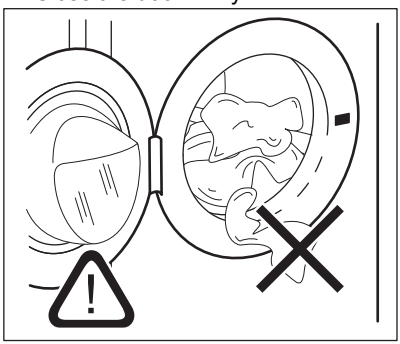

⚠ **CAUTION!**

- Make sure that no laundry stays between the seal and the door. There is a risk of water leakage or damage to the laundry.
- Washing heavily oiled, greasy stains or using fragrances perfume could cause damage rubber parts of the appliance.

15.6 Filling the detergent and additives

ⓘ

We recommend that you do not exceed the maximum indicated level (**MAX**).

1. Open the detergent dispenser.

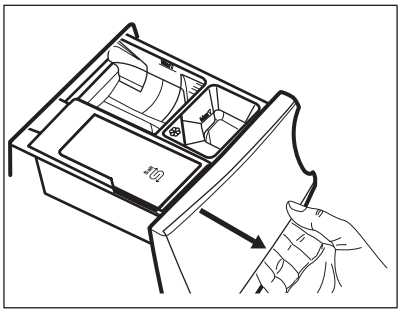

2. Put the powder detergent in the compartment ⅡⅡ. If using liquid detergent, refer to 'Filling the liquid detergent'.

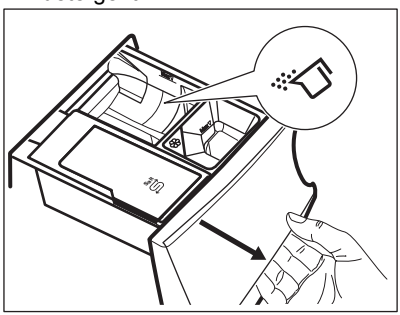

3. If desired, pour the fabric softener in the compartment ❀.

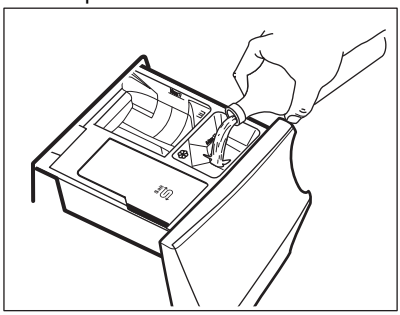

4. Close the detergent dispenser.

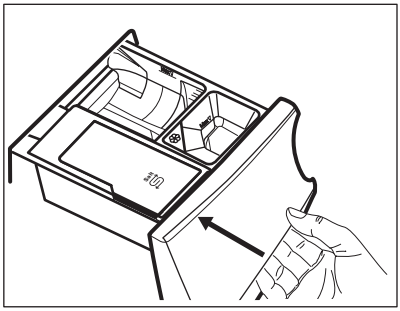

Filling the liquid detergent

1. Insert the proper container for liquid detergent.

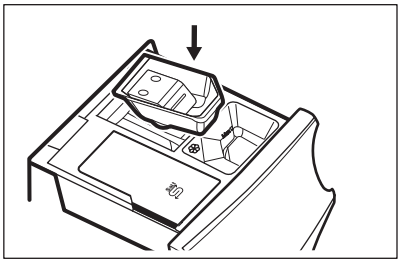

2. Pour the liquid detergent in the compartment II.

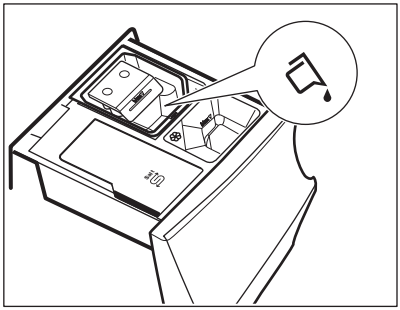

3. Close the detergent dispenser.

15.7 Bleach

Alternatively the softener, it is also possible to use a bleach agent in the compartment ❀ with the programmes for white cottons. Proceed as follows:

1. Put the bleach in the compartment ❀.

Do not exceed the **«MAX»** mark in the detergent dispenser drawer.

2. Run a programme for white cottons.
3. At the end of the programme, run the rinse programme or a programme with the rinse option. Use softener, if desired.

This helps to eliminate any bleach residues.

ⓘ

Never pour bleach and softener into the compartment at the same time.

15.8 Starting a programme

Touch the Start/Pause ▷II key button to start the programme.
The related indicator stops flashing and stays on.
The programme starts, the door is locked.

The display shows the indicator ⊸ .

ⓘ

The drain pump can operate shortly before the appliance fills water.

15.9 The SensiCare System load detection

ⓘ

The programme duration in the display is referred to a **medium/high load**.

After touching the Start/Pause ▷II key button, the maximum declared load indicator goes off, the SensiCare System starts the laundry load detection:

1. The appliance detects the load in the first 30 seconds.
2. If overloading is detected, the alert is shown for 30s before the display goes in the previous view.
3. During this phase the drum rotates shortly.
4. The programme duration could be adjusted accordingly and could increase or decrease. After further 30 seconds, the water filling starts.

At the end of the load detection, **in case of drum overload**, it is possible to pause the appliance and remove the exceeding garments.

Once removed the exceeding garments, touch the Start/Pause ▷|| key button to start the programme again. The SensiCare phase can be repeated up to three times (see point 1).

Important! If the laundry amount will not be reduced, the washing programme starts anyway, despite the overload. In this case, it will be not possible to guarantee the best washing results.

ⓘ

About 20 minutes after the programme start, the programme duration could be adjusted again depending on the capacity of water absorption of the fabrics.

ⓘ

The SensiCare System is not available with all programmes such as :Wool/Silk, Rinse and programmes with short duration.

15.10 Interrupting a programme and changing the options

When the programme is running, you can change **only some** options:

1. Touch the Start/Pause ▷|| key button.

The related indicator flashes.

2. Change the options. The given information in the display changes accordingly.
3. Touch the Start/Pause ▷|| key button again.

The washing programme continues.

15.11 Cancelling a running programme

1. Press the On/Off ⏻ button to cancel the programme and to deactivate the appliance.
2. Press the On/Off ⏻ button again to activate the appliance.

Now, you can set a new washing programme.

ⓘ

If the SensiCare phase is already carried out and the water filling is already started, the new programme starts **without repeating the SensiCare phase**. The water and the detergent are not drained out in order to avoid waste. The display shows the maximum duration of the programme, updating it about 20 minutes after the starting of the new programme.

15.12 Opening the door - Adding garments

If a message in the display that inform you that you can add or remove garments, you can always open the door.

While a programme or the delay start operates, the appliance door is locked. The display shows the indicator 🔒 .

ⓘ

If the temperature and level of the water in the drum are too high and/or the drum is still rotating you should not open the door.

To add or to remove garments:

1. Touch the Start/Pause ▷|| key button.

In the display the related door lock indicator 🔒 goes off.

2. Open the appliance door. If necessary, add or remove the garments. Close the door and touch the Start/Pause ▷|| key button.

The programme or the delay start continues.

15.13 End of the programme

When the programme has finished, the appliance stops automatically. The acoustic signals operate (if they are active). The display shows Done, the completed line of progress and Remove Garments message.

The indicator of the Start/Pause ▷|| key button goes off.

The door unlocks and the indicator 🔒 goes off.

1. Press the On/Off ⏻ button to deactivate the appliance.

After five minutes from the end of the programme, the energy saving function automatically deactivates the appliance.

ⓘ

When you activate the appliance again, the appliance proposes Eco 40-60 as default programme. Turn the programme dial to set a new cycle.

2. Remove the laundry from the appliance.
3. Make sure that the drum is empty.
4. Keep the door and the detergent dispenser slightly open to prevent mildew and odours.

15.14 Draining water out after end of cycle

If you have chosen a programme or an option that does not empty out the water of the last rinse, the programme is completed, but:

- Draning phase is shown in the display and the door is locked.
- The indicator of the Start/Pause ▷|| key button starts flashing.
- The drum still turns at regular intervals to prevent creases in the laundry.
- The door stays locked.
- You must drain the water to open the door.

15.15 Stand-by function

The Stand-by function automatically deactivates the appliance to reduce the energy consumption when:

- You do not use the appliance for 5 minutes when no programme is running.

  Press the button On/Off ⏻ to activate the appliance again.
- 5 minutes after the end of the washing programme.

  Press the On/Off ⏻ button to activate the appliance again.
  The default selected programme, after reactivating appliance from stand-by function is always Eco 40-60.
  Turn the programme dial to set a new cycle.

ⓘ

If you set a programme or an option that ends with water in the drum, the Stand-by function **doesn't deactivate** the appliance to remind you to drain the water.

ⓘ

If the Wi-Fi Always On function is active, only the indicator goes on and off intermittently.

16. HINTS AND TIPS

⚠ **WARNING!**

Refer to Safety chapters.

16.1 The laundry load

- Divide the laundry into: white, coloured, synthetics, delicates and wool.
- Follow the washing instructions on the laundry care labels.
- Do not wash white and coloured items together.
- Remember that the temperature on the care label is referring to max temperature and is not recommended temperature.
- Check the level of need for wash, the garments may only need a refresh and Steam Refresh can be used instead
- Some coloured items can discolour with the first wash. We recommend that you wash them separately for the first couple of times.
- Turn multilayered fabrics, wool and items with printed illustrations inside out.
- Pre-treat stubborn stains.
- Wash stubborn stains with a special detergent.
- Be careful with curtains. Remove the hooks and put the curtains in a washing bag or pillowcase.

- A very small load can cause balance problems with the spin phase leading to excessive vibration. If this occurs:
  a. interrupt the programme and open the door (refer to "Daily Use" chapter);
  b. manually redistribute the load so that the items are spaced evenly around the tub;
  c. press the Start/Pause button. The spin phase continues.
- Button up pillowcases, close zippers, hooks and poppers. Tie up belts, cords, shoelaces, ribbons and any other loose elements.
- Do not wash laundry without hems or with cuts. Use a washing bag to wash small and/or delicate items (e.g. underwired bras, belts, tights, shoelaces, ribbons, etc.).

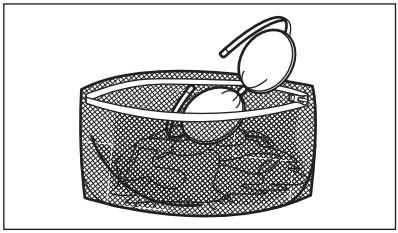

- Empty pockets and unfold the items.

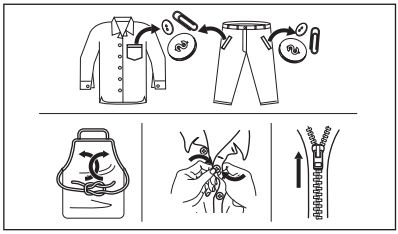

16.2 Stubborn stains

For some stains, water and detergent is not sufficient.

We recommend that you pre-treat these stains before you put the items in the appliance.

Special stain removers are available. Use the special stain remover that is applicable to the type of stain and fabric.

Do not spray stain remover on garments near the appliance as it is corrosive to the plastic parts.

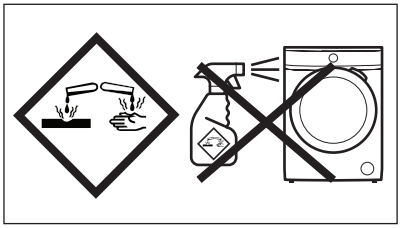

16.3 Detergent type and quantity

The choice of detergent and use of correct quantities not only affects your wash performance, but also helps to avoid waste and protect the environment:

- Use only detergents and other treatments specially made for washing machines. First, follow these generic rules:
  – powder detergents (also tablets and single-dose detergents) for all types of fabric, excluding delicate. Prefer powder detergents containing bleach for whites and laundry sanitization,
  – liquid detergents (also single-dose detergents) , preferably for low temperature wash programmes (60 °C max) for all types of fabric, or special ones for woollens only.
- The choice and quantity of detergent will depend on: type of fabric (delicates, woollens, cottons, etc), the colour of clothes, size of the load, degree of soiling, wash temperature, time and hardness of the water used.
- Follow the instructions that you find on packaging of the detergents or other treatments without exceeding the indicated maximum level (**MAX**).
- Do not mix different types of detergents.
- Use less detergent if:
  – you are washing a small load,
  – the programme duration has been reduced by the Time Manager button.
  – the laundry is lightly soiled,
  – there is large amounts of foam during washing.
- When using detergent tabs or pods, always put them inside the drum, not in the detergent dispenser and follow the manufacturer's recommendations .

Insufficient detergent may cause:

- unsatisfactory washing results,

- the wash load to turn grey,
- greasy clothes,
- mould in the appliance.

Excessive detergent may cause:
- sudsing,
- reduced washing effect,
- inadequate rinsing,
- a greater impact for the environment.

16.4 Savings tips

Let the SmartSelect function guide you to save energy, time and water.

Extra Light and Light options can be used the most of the time. Use Steam Refresh , to avoid washing and refresh your clothes with only steam.

For better result we recommend that you follow these tips:

- **Normally soiled laundry** may be washed **without prewash** in order to save detergent, water and time.
- Loading the appliance to the **maximum capacity indicated for each programmes helps to reduce energy and water consumption**.
- With adequate pre-treatment, stains and limited soiling can be removed; the laundry can then be washed at a lower temperature.
- If you have a tumble dryer its suggested to use **maximum possible spin speed** for the selected washing programme in order to save energy during drying.
- Preferably, use short cycles at lower temperatures.

16.5 Water hardness

If the water in your area is hard or medium hard, we recommend that you use a water softener additive for washing machines.

In areas where the water is soft it is not necessary to use a water softener.

To find out the water hardness in your area, contact your local water authority.

Use the correct quantity of water softener. Follow the instructions that you find on the packaging of the product.

17. CARE AND CLEANING

WARNING!

Refer to Safety chapters.

17.1 Periodic cleaning schedule

Periodic cleaning helps to extend the life of your appliance.

After each cycle, keep the door and the detergent dispenser slightly open to get air circulation and dry the humidity inside the appliance: this will prevent mildew and odours.

If the appliance is not used for a long time: close the water tap and unplug the appliance.

Indicative periodic cleaning schedule:

Descaling	Twice a year
Maintenance wash	Once a month
Clean door seal	Every two months
Clean drum	Every two months
Clean detergent dispenser and salt compartment	Twice a year
Clean drain pump filter	Twice a year
Clean the inlet hose and the valve filter	Twice a year

The following paragraphs explain how you should clean each part.

17.2 Removing foreign objects

Make sure that pockets are empty and all loose elements are tied up before running your cycle. Refer to "The laundry load" in "Hints and tips".

Remove any foreign objects (such as metal clip, buttons, coins, etc) that you may find in the door seal, the filters and the drum. Refer to "Door seal with double lip trap", "Cleaning the drum", "Cleaning the drain pump" and "Cleaning the inlet hose and the valve filter" paragraphs. If necessary, please contact the Authorised Service Centre.

17.3 External cleaning

Clean the appliance with mild soap and warm water only. Fully dry all the surfaces.

Do not use a scouring pads or any scratching material.

⚠ CAUTION!

Do not use alcohol, solvents or chemical products.

⚠ CAUTION!

Do not clean the metal surfaces with chlorine-based detergent.

17.4 Descaling

If you use the salt regularly to activate the SoftWater Technology, the descaling procedure described in this paragraph is not necessary.

If the water in your area is hard or medium hard, we recommend that you use a water softener for washing machines.

Regularly examine the drum to check for limescale.

The regular detergents already contain water softening agents, but we recommend to run a cycle with empty drum and a descaling product occasionally.

Always follow the instructions that you find on the packaging of the product.

17.5 Maintenance wash

The repeated and prolonged use of low temperature and short programmes can cause detergent deposits, fluff residues, bacterial growth and biofilm formation inside the drum and the tub. This could generate bad odours and mildew.

To eliminate these deposits and hygienize the inner part of the appliance, run a maintenance wash at least once a month:

1. Remove all laundry from the drum.
2. Run a cotton programme with the highest temperature with a small quantity of powder detergent or, if available, run the Machine Clean programme.

17.6 Door seal

This appliance is designed with a **self cleaning draining system**, allowing light fluff fibers that fall off the clothes to be drained out with the water. Regularly examine the seal and if necessary clean as described in the following diagram. Coins, buttons, other small items can be recovered at the end of the cycle.

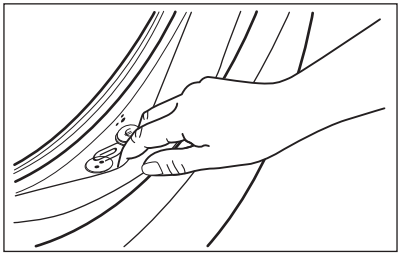

Clean it when needed, using ammonia cream cleanser agent without scratching the seal surface.

Always obey the instructions that you find on the packaging of the product.

17.7 Cleaning the drum

Regularly examine the drum to prevent unwanted deposits.

Rust deposits in the drum may occur due to rusting foreign body in the washing or tap water containing iron

Clean the drum with special products for stainless steel.

ⓘ

Always follow the instructions that you find on the packaging of the product. Do not clean the drum with acidic descaling products, scouring products containing chlorine or iron or steel wool.

For a thorough clean:

1. Clean the drum with special products for stainless steel.

ⓘ

Always follow the instructions that you find on the packaging of the product.

2. Remove all laundry from the drum.
3. Add a manually small quantity of powder detergent or a specific product into the empty drum, in order to rinse out any left residues.

ⓘ

Occasionally, at the end of a cycle the display may show the ✧ icon: this is a recommendation to perform the “drum cleaning”. Once the drum cleaning has been performed, the message disappears.

17.8 Cleaning the detergent dispenser and the salt compartment

ⓘ

Before cleaning, make sure that the all compartments are empty.

To prevent possible deposits of dried detergent, clotted fabric softener, formation of mould in the dispenser drawer and/or salt fouling in the salt compartment, once in a while carry out the following cleaning procedure:

1. Open the drawer. Press the catch as indicated in the picture and pull the drawer out.

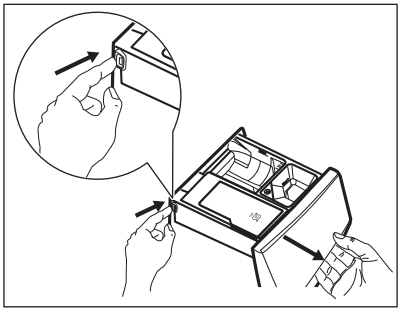

2. Remove the insert for the softener and, if inserted, the container for liquid detergent.

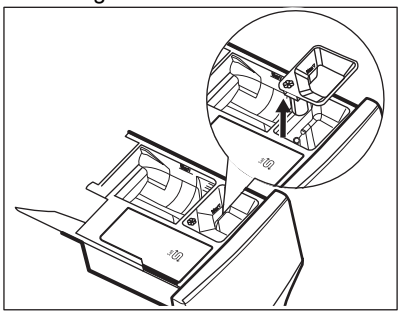

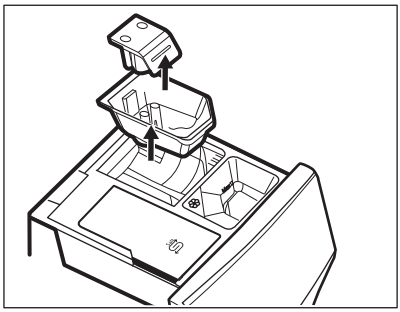

3. Wash the drawer and all inserts under running water.

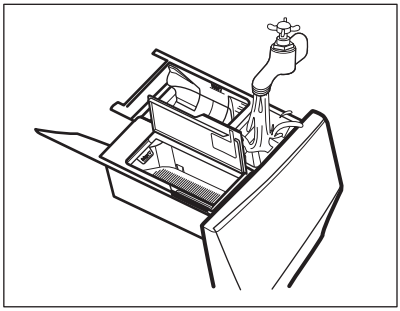

4. Make sure that all detergent residue is removed from the detergent conveyor. Use a cloth.

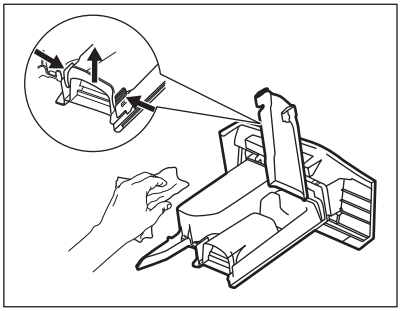

5. Make sure that all detergent residue is removed from the upper and lower part of the recess. Use a small brush to clean the recess.

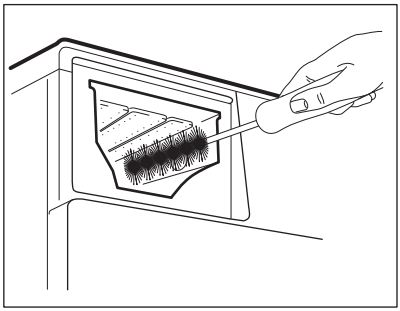

6. Insert the detergent drawer into the guide rails and close it. Run the rinsing programme without any clothes in the drum.

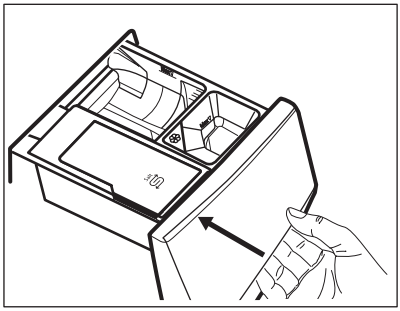

17.9 Cleaning the drain pump filter

⚠ WARNING!

Disconnect the mains plug from the mains socket.

ⓘ

Regularly check the drain pump filter and make sure that it is clean.

Clean the drain pump filter if:

- The appliance does not drain the water.
- The drum does not turn.
- The appliance makes an unusual noise because of the blockage of the drain pump.
- The message Check that the drain filter is not clogged pops up.

⚠ WARNING!

- Do not remove the filter while the appliance operates.
- Do not clean the pump if the water in the appliance is hot. Wait until the water cools down

Proceed as described in following diagrams to clean the pump filter:

1. Open the pump cover.

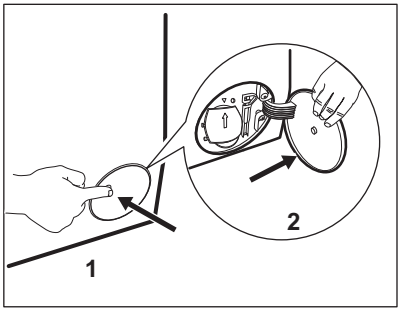

2. Place a suitable bowl below the drain pump access to collect the water that flows out.
3. Open the chute downwards. Always keep a rag nearby to dry up any water spillages when removing the filter.

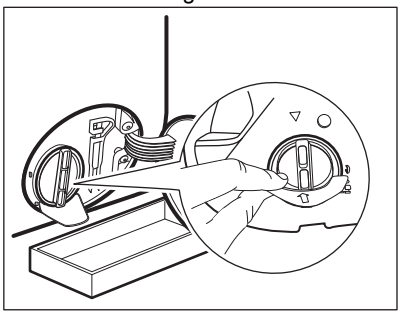

4. Turn the filter 180 degrees in anti-clockwise direction to open it, without removing. Let the water flow out.

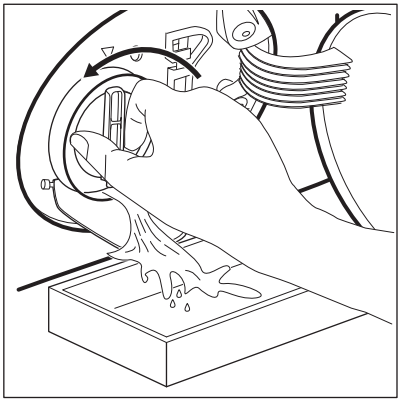

5. When the bowl is full of water, turn the filter back and empty the container.
6. Repeat the steps 4 and 5 until the water stops to flow out.
7. Turn the filter anti-clockwise to remove it.

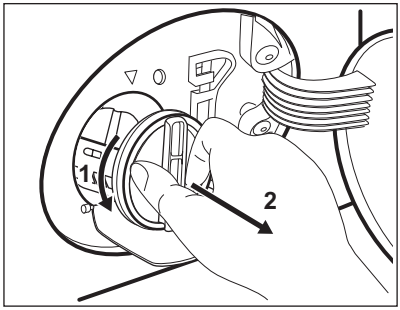

8. If it is necessary, remove fluff and objects from the filter recess.
9. Make sure that the impeller of the pump can rotate. If it does not rotate, contact the Authorised Service Centre.

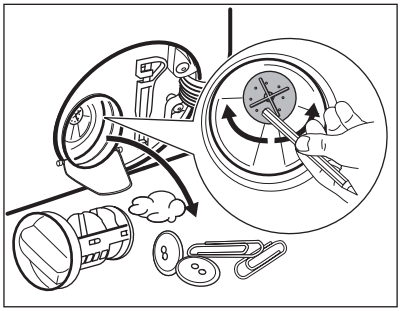

10. Clean the filter under the water tap.

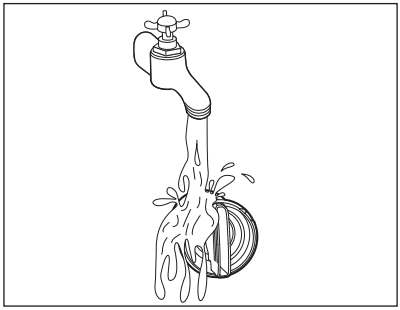

11. Put the filter back into the special guides by turning it clockwise. Make sure that you tighten the filter correctly to prevent leakages.

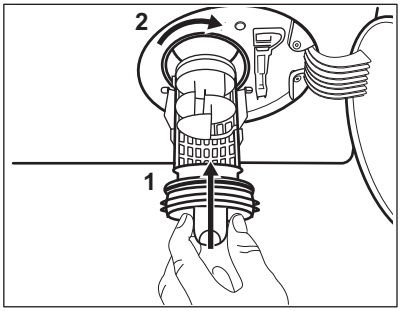

12. Close the pump cover.

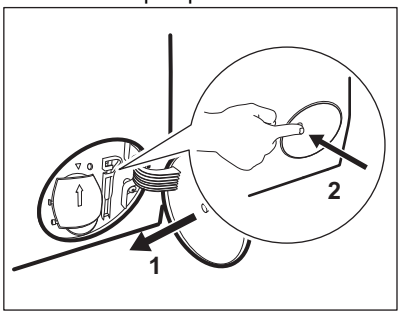

When you drain the water with the emergency drain procedure, you must activate the drain system again:

- **a.** Put 2 litres of water in the main wash compartment of the detergent dispenser.
- **b.** Start the programme to drain the water.

17.10 Cleaning the inlet hose and the valve filter

It is recommended to clean both the filters of the inlet hose and valve twice a year to remove any deposit, collected over the time. Proceed as described in following diagrams to clean filters:

1. Remove the inlet hose from the tap and clean the filter.

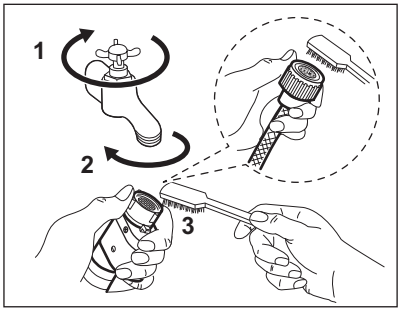

2. Remove the inlet hose from the appliance by loosening the ring nut.

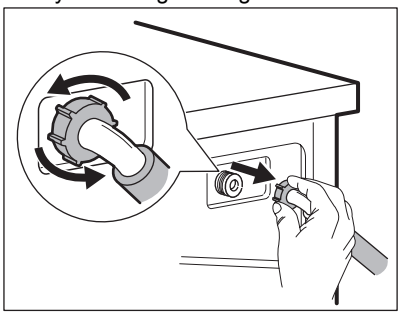

3. Clean the valve filter on the back of the appliance with a toothbrush.

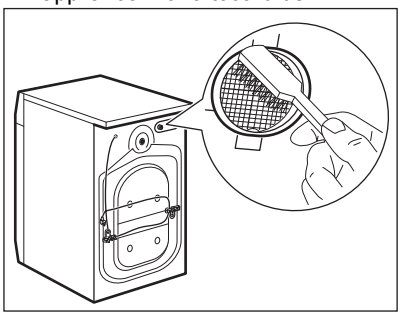

4. When you reconnect the hose to the back of the appliance, turn it left or right (not in vertical position) depending on the position of your water tap.

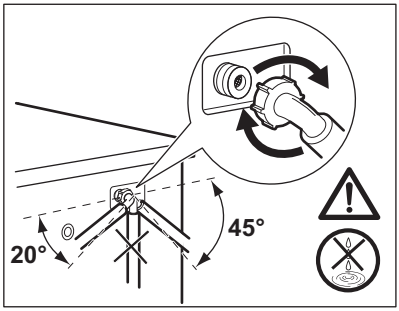

17.11 Emergency drain

If the appliance cannot drain the water, carry out the same procedure, described in 'Cleaning the drain pump' paragraph. If necessary, clean the pump.

When you drain the water with the emergency drain procedure, you must activate the drain system again:

1. Put 2 litres of water in the main wash compartment of the detergent dispenser.
2. Start the programme to drain the water.

17.12 Frost precautions

If the appliance is installed in an area where the temperature can reach the values around 0° C or drop below, remove the remaining water from the inlet hose and the drain pump.

1. Disconnect the mains plug from the mains socket.
2. Close the water tap.
3. Put the two ends of the inlet hose in a container and let the water flow out of the hose.
4. Empty the drain pump. Refer to the emergency drain procedure.
5. When the drain pump is empty, install the inlet hose again.

⚠ WARNING!

Make sure that the temperature is higher than 0 °C before you use the appliance again.
The manufacturer is not responsible for damages caused by low temperatures.

18. TROUBLESHOOTING

⚠ WARNING!

Refer to Safety chapters.

18.1 Alarm Codes and Possible failures

The appliance does not start or it stops during operation. First try to find a solution to the problem (refer to the tables).

⚠ WARNING!

Deactivate the appliance before carrying out any check.

With some problems, the display shows an alarm message and the Start/Pause ▷‖ **button may flash continuously:**

Problem	Possible solution

Check that the water inlet tap is open: The appliance does not fill with water properly.	• Make sure that the water tap is open. • Make sure that the pressure of the water supply is not too low. For this information, contact your local water authority. • Make sure that the water tap is not clogged. • Make sure that the inlet hose has no kinks, damages or bends. • Make sure that the connection of the water inlet hose is correct. • Make sure that the filter of the inlet hose and the filter of the valve are not clogged. Refer to 'Care and cleaning'.
Check that the drain filter is not clogged: The appliance does not drain the water.	• Make sure that the sink spigot is not clogged. • Make sure that the drain hose has no kinks or bends. • Make sure that the drain filter is not clogged. Clean the filter, if necessary. Refer to "Care and cleaning". • Make sure that the connection of the drain hose is correct. • Set the drain programme if you set a programme without drain phase. If the drain programme is not available in the programme dial, it can be set via App. • Set the drain programme if you set an option which ends with water in the tub.
Check that the door is properly closed: The appliance door is open or not closed correctly.	• Make sure that the door is properly closed.
Programme will continue when electricity supply is stable: The mains supply is unstable.	• Wait until mains supply is stable.

If the display shows other alarm codes, deactivate and activate the appliance. If the problem continues, contact the Authorised Service Centre.
In case of different problem with the appliance check the table below for possible solutions.

Problem	Possible solution
The programme does not start.	• Make sure that the mains plug is connected to the mains socket. • Make sure that the appliance door is closed. • Make sure that there is no damaged fuse in the fuse box. • Make sure that the Start/Pause ▷‖ has been touched. • If the delay start is set, cancel the setting or wait for the end of countdown. • Deactivate the Child Lock function if it is on. • Check the position of the knob on the selected programme.
The appliance fills with water and drains immediately.	• Make sure that the drain hose is in the correct position. The hose may be positioned too low. Refer to "Installation instruction".
The spin phase does not operate or the washing cycle lasts longer than usual.	• Set the spin programme. If the drain programme is not available in the programme dial, it can be set via App'. • Make sure that the drain filter is not clogged. Clean the filter, if necessary. Refer to "Care and cleaning". • Adjust manually the items in the tub and start the spin phase again. This problem may be caused by balance problems.

Problem	Possible solution
There is water on the floor.	• Make sure that the couplings of the water hoses are tight and there is not water leakages. • Make sure that the water inlet hose and the drain hose have no damages. • Make sure you use the correct detergent and the correct quantity of it.
You cannot open the appliance door.	• Make sure that a washing programme that ends with water in tub, has not been selected. • Make sure that the washing programme is finished. • Set the drain or the spin programme if there is water in the drum. If the spin and drain programmes are not available in the programme dial, they can be set via App. • Make sure that the appliance receives electrical power. • This problem may be caused by a failure of the appliance. Contact the Authorised Service Centre. If you need to open the door, please read carefully "Emergency door opening". • Make sure that the Remote Start Mode is not activated. Deactivate it.
The message "Failed to connect to your WiFi" appears on the screen.	• Check the wireless signal. • Check your home network and router. • Restart the router. • Contact your wireless service provider if there are further problems with the wireless network.
The App cannot connect to the appliance.	• Check the wireless signal. • Check if your smart device is connected to the wireless network. • Check your home network and router. • Restart the router. • Contact your wireless service provider if there are problems with the wireless network. • The appliance, the smart device, or both, need to be configured again because a new router has been installed or the router configuration has been changed.
The App cannot frequently connect to the appliance.	• Make sure that the wireless signal reaches the appliance. Try to move the home router as near the appliance as possible or consider purchasing a wireless range extender. • Make sure the wireless signal is not disrupted by microwave. Turn the microwave off. Avoid using the microwave and the remote control at the same time.
The display shows UPd. All buttons are inactive, except the the On/Off ⏻.	• The appliance is downloading any available updates. Wait until the update process is complete. If you deactivate the appliance during update, it resumes when you activate the appliance again.
The appliance makes an unusual noise and vibrates.	• Make sure the levelling of the appliance is correct. Refer to "Installation instruction". • Make sure that the packaging and/or the transit bolts are removed. Refer to "Installation instruction". • Add more laundry in the drum. The load may be too small.

Problem	Possible solution
The programme duration increases or decreases during programme execution.	• The SensiCare System is able to adjust the programme duration according to the type and the laundry load size. Refer to "The SensiCare System load detection" in "Daily Use" chapter.
The washing results are not satisfactory.	• Increase the detergent quantity or use a different detergent. • Use special products to remove the stubborn stains before you wash the laundry. • Make sure that you set the correct temperature. • Decrease the laundry load. • Make sure that no other type of detergent has been poured the compartment Salt. In this case, refer to "Eliminating detergent or other additives from salt compartment'. • Make sure that no salt has been poured in the compartment II. If it happens, run a rinse cycle or run the washing cycle again.
Too much foam in the drum during the washing cycle.	• Reduce the quantity of detergent or the number of tablets or single-dose detergents.
Excessive consumption of salt.	• Check if the water softener has been set to act also during rinse phase. Refer to "How to set the water hardness level" in "The Water Softener (ColourCare)" chapter.
Salt is not consumed.	• The appliance may need a water softener regeneration: run a a Cottons or a Synthetics cycle. Refer to "Water softener regeneration" in "The Water Softener (ColourCare)" chapter.
The drum light does not go on.	• Make sure that the LED lamp is not burned. To replace it, contact the Authorised Service Centre.

After the check, activate the appliance. The programme continues from the point of interruption.
If the problem occurs again, contact the Authorised Service Centre.
The necessary data for the service centre are on the rating plate.

18.2 Emergency door opening

In case of power failure or functioning failure the appliance door remains locked. The washing programme continues when the power is restored. If the door remains locked in case of failure, it is possible to open it using the emergency unlock function.

Before opening the door:

⚠ CAUTION!

Risk of burns! Make sure that the water temperature is not too high and the laundry is not hot. If necessary, wait until they cool down.

⚠ CAUTION!

Risk of injury! Make sure that the drum is not rotating. If necessary, wait until the drum stops rotating.

ⓘ

Make sure that the water level inside the drum is not too high. If necessary, proceed with an emergency drain (refer to «Emergency drain» in «Care and cleaning» chapter).

To open the door, proceed as follows:

1. Press the On/Off ⏻ button to switch the appliance off.
2. Disconnect the mains plug from the mains socket.
3. Open the filter flap.
4. Pull the emergency unlock trigger downward once. Pull it downward once again, keep it tensed and, in the meanwhile, open the appliance door.

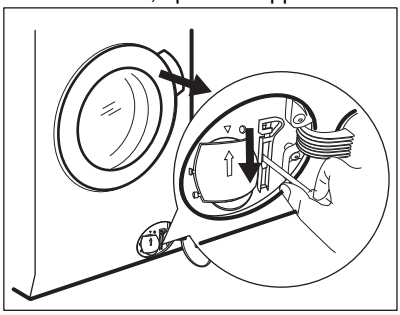

5. Take out the laundry and then close the appliance door.
6. Close the filter flap.

18.3 Eliminating detergent or other additives from salt compartment Salt

Any type of detergent and additives inadvertently poured in the compartment Salt must be eliminated completely.

If this happens, please proceed as follows:

1. Pull the drawer out.

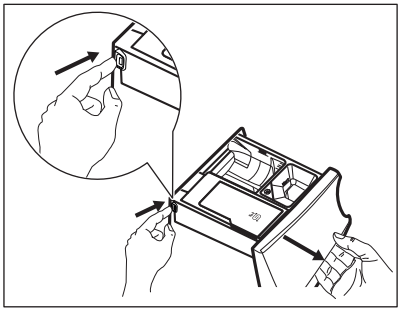

2. Eliminate any trace of detergent or additive and clean the compartment thoroughly.
3. Insert the drawer back and pour salt in the compartment Salt.
4. Close the drawer.
5. Run a cotton or synthetic cycle, without reducing time, to restore the water softener function.

19. CONSUMPTION VALUES

19.1 Comment

ⓘ

The QR code on the energy label supplied with the appliance provides a web link to the information related to the performance of the appliance in the EU EPREL database. Keep the energy label for reference together with the user manual and all other documents provided with this appliance.
It is also possible to find the same information in EPREL using the link **https://eprel.ec.europa.eu** and the model name and product number that you find on the rating plate of the appliance. Refer to 'Product description' chapter for the position of the rating plate.

ⓘ

Values and programme duration may differ depending on different conditions (e.g. room temperature, water temperature and pressure, load size and type of laundry, supply voltage) and also if you change the default setting of a programme.

19.2 According to Commission Regulation Eu 2019/2023

Eco 40-60 programme 1)	kg	kWh	Litres	hh:mm	%	°C	rpm2)
Full load	10.0	0.265	71.0	03:55	53.00	25.0	1351
Half load	5.0	0.210	53.0	02:50	53.00	25.0	1351
Quarter load	2.5	0.160	35.0	02:00	54.00	25.0	1351

1) The performance results and low energy consumption are guaranteed by the use of softened water. To maintain this achievement over time, it is essential to set the right water hardness level by following the user manual instructions and use salt regularly for regenerating the resins.

2) Maximum spin speed.

Power consumption in different modes

Off (W)	Stand-by (W)	Delay start (W)	Networked standby (W)
0.50	0.50	4.00	2.00**1)**

Time to Off/Standby mode is 15 minutes maximum.

1) The energy consumption of the connected function is approximately 17.5 kWh per year. To disconnect this function, please refer to the chapter 'Wi-fi - Connectivity setup'.

19.3 Common programmes

Programme	kg	kWh	Litres	hh:mm	%	°C	rpm
Cottons **1)** 90°C	10.0	3.300	95.0	03:35	52.00	85.0	1400
Cottons 60°C	10.0	2.200	95.0	03:30	52.00	55.0	1400
Cottons **2)** 20°C	10.0	0.350	95.0	03:10	52.00	20.0	1400
Synthetics 40°C	5.0	0.950	65.0	02:45	35.00	40.0	1200
Delicates **3)** 30°C	2.0	0.350	55.0	01:05	35.00	30.0	1200
Wool 30°C	3.0	0.500	80.0	01:15	30.00	30.0	1200

1) Suitable for washing heavily soiled textiles.

2) Suitable for washing lightly soiled cottons, synthetic and mixed fabrics.

3) It also performs as quick washing cycle for lightly soiled laundry.

20. QUICK GUIDE

20.1 Daily use

- Connect the mains plug to the mains socket.
- Open the water tap.
- Push the **On/Off** ⏻ button to turn the appliance on.
- Turn the programme dial to set the desired programme.
- Set the desired options by tapping on the corresponding key buttons.

ⓘ

Let the SmartSelect function guide you to save energy and water. Extra Light and Light options can be used the most of the time. Use Steam Refresh , to avoid washing and refresh your clothes with only steam.

- Put the laundry in the drum, one item a time without exceeding the maximum suggested load. Close the door and make sure that no laundry stays between the seal and the door.
- Pour the detergent and other treatment in the proper compartment of the detergent dispenser.
- To start the programme, touch the **Start/ Pause** ▷❙❙ button **(4)**.
- The appliance starts.
- At the and of the programme, remove the laundry.
- Push the **On/Off** ⏻ button to turn the appliance off.

20.2 Cleaning the drain pump filter

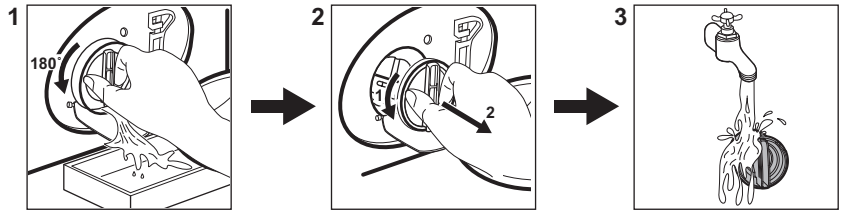

Clean the filter regularly and, especially, if the alarm code E20 appears on the display.

20.3 Programmes

Programmes	Load	Product description
Eco 40-60	10.0 kg	Low energy cycle for cottons. Decreases temperature and extends time to reach good washing results.
UltraQuick 39min	8.0 kg	Cotton and synthetic items. This programme ensures a good washing performance in a short time. ⓘ The standard program duration has been developed on a laundry load of 5 kg. If you wash a smaller or a bigger load, the washing time automatically decreases or increases ensuring perfect results.
Cottons	10.0 kg	White and coloured cotton fabrics. Ideal for normal and heavy soil.
Synthetics	5.0 kg	Synthetic items or mixed fabric items.
Delicates	2.0 kg	Delicate fabrics such as acrylics, viscose, polyester items.
Wool/Silk	3.0 kg	Machine washable wool, hand washable wool and delicates.
Rapid 20min	3.0 kg	Cotton and synthetic lightly soiled items or once worn items.
Sportswear	5.0 kg	**Sport outfit, synthetic fibres** like polyester, polyester/elastane blends, polyamide. Suitable to remove sweat and body soil from technical sport garments.
Jeans	4.0 kg	Denim clothing and jersey items.
Outdoor	2.0 kg **1)** 1.0 kg **2)**	Modern outdoor sporting garments.
Down Jackets	2.0 kg	Single synthetic blanket, padded clothes, duvets, down jackets.

Programmes	Load	Product description
Hygiene	10.0 kg	White cotton items. This programme removes more than 99,99% of bacteria and viruses **3)**. It also ensure a proper reduction of allergens.
Silk	0.5 kg	Special programme for silk and mixed synthetic items.
Duvet	3.0 kg	Synthetic or feather and down filled blankets, padded clothes, duvets.
Machine Clean	-	Maintenance cycle for drum cleaning.
Spin/Drain	10.0 kg	To spin the laundry and to drain the water in the drum. All fabrics, except woollens and delicate fabrics.
Rinse	10.0 kg	All fabrics, except woollens and very delicate fabrics. Programme for rinsing and spinning.

1) Washing programme.

2) Washing programme and water repellent phase.

3) Tested for Staphylococcus aureus, Enterococcus faecium, Candida albicans, Pseudomonas aeruginosa and MS2 Bacteriophage in external test performed by Swissatest Testmaterialien AG in 2021 (Test Report No. 202120117).

21. ENVIRONMENTAL CONCERNS

Recycle materials with the symbol ♺. Put the packaging in relevant containers to recycle it. Help protect the environment and human health by recycling waste of electrical and electronic appliances. Do not dispose of appliances marked with the symbol with the household waste. Return the product to your local recycling facility or contact your municipal office.

electrolux.com

157090420-A-412024

