User Guide



ThinkStation P2 Tower

About this documentation

This documentation applies to the ThinkStation product models listed below.

Model name	Machine types (MT)
ThinkStation P2 Tower	30FR, 30FS

Further compliance information related to your product is available at https://www.lenovo.com/compliance.

Before using this documentation, please read the following information:

- *Setup Guide*
- *Safety and Warranty Guide*
- For more compliance information, refer to *Regulatory Notice* at https://support.lenovo.com/docs/common_commercial_rn and *Generic Safety and Compliance Notices* at https://pcsupport.lenovo.com/docs/generic_notices.
- Illustrations in this documentation might look different from your product.
- Depending on the model, some optional accessories, features, software programs, and user interface instructions might not be applicable to your computer.
- Microsoft® makes periodic feature changes to the Windows® operating system through Windows Update. As a result, some information in this documentation might become outdated. Refer to Microsoft resources for the latest information.
- Documentation content is subject to change without notice. To get the latest documentation, go to https://support.lenovo.com/documentation.

Fourth Edition (September 2025)

© Copyright Lenovo 2024, 2025.

LIMITED AND RESTRICTED RIGHTS NOTICE: If data or software is delivered pursuant to a General Services Administration “GSA” contract, use, reproduction, or disclosure is subject to restrictions set forth in Contract No. GS-35F-05925.

Contents

Chapter 1. Meet your computer 1
Front 1
Rear 3
Internal storage drives 5
Features and specifications 7
USB specifications 8

Chapter 2. Get started with your computer 10
Access networks 10
Connect to the wired Ethernet 10
Connect to Wi-Fi networks (for selected models) 10
Connect an external display 10
Manage cables with a smart cable clip 10

Chapter 3. Explore your computer . . 12
The Vantage app 12
Set the power plan 12
Transfer data 12
Connect to a Bluetooth-enabled device (for selected models) 12
Use the optical drive (for selected models) . . 13
Use a media card (for selected models) 14
Purchase accessories 14

Chapter 4. Secure your computer and information 15
Lock the computer 15
Log in to your computer securely 16
UEFI BIOS passwords 16
Use software security solutions 17
Windows firewalls 17
Computrace Agent software embedded in firmware (for selected models) 18
Use BIOS security solutions 18
Wipe the storage drive data 18
Cover presence switch 18
Intel BIOS guard 19
Smart USB Protection 19
Absolute Persistence (for computers with Windows operating system and purchased outside mainland China) 19

Chapter 5. UEFI BIOS 20
What is UEFI BIOS 20
Enter the BIOS menu 20
Navigate in the BIOS interface 20
Change the display mode of UEFI BIOS (for selected models) 20
Set the system date and time 21
Change the boot priority order 21
Enable or disable the configuration change detection feature 21
Enable or disable the automatic power-on feature 22
Enable or disable the smart power-on feature (for selected models) 22
Change the ITS performance mode 22
Change BIOS settings before installing a new operating system 23
Update the UEFI BIOS 23
From the Vantage app 23
From the Lenovo Support Web site 23
From the Windows Update 23
Remote update via Windows Remote Desktop 24

Chapter 6. RAID 25
What is RAID 25
RAID Level 25
Configure the system BIOS to enable SATA RAID functionality 25
Configure RAID in UEFI mode 26

Chapter 7. Diagnostics 27
Lenovo diagnostic tools 27
The Vantage app 27

Chapter 8. CRU replacement 28
What is CRU 28
CRU list 28
Remove or replace a CRU 29
Computer cover 29
Slim optical drive 30
Front bezel 31
Primary storage drive 32
3.5-inch primary storage drive cage 35
Slim-optical-drive cage 36
Secondary storage drives 37
Storage drive in the front-access storage enclosure 39
PCI-Express card 44
Graphics card holder 46
Graphics card 47
M.2 solid-state drive and heat sink 50
M.2 solid-state drive bracket 54

© Copyright Lenovo 2024, 2025

Front fan 55
Rear fan 56
Heat-sink-and-fan assembly 57
Chassis beam 61
Memory module 62
Power supply assembly 64
E-lock 65

Chapter 9. Help and support 66
Self-help resources 66
Call Lenovo 67
Before you contact Lenovo 67
Lenovo Customer Support Center 68
Purchase additional services 69
Accessibility features 69

Appendix A. System memory speed 70

Appendix B. Compliance information 71

Appendix C. Notices and trademarks 72

Chapter 1. Meet your computer

Front

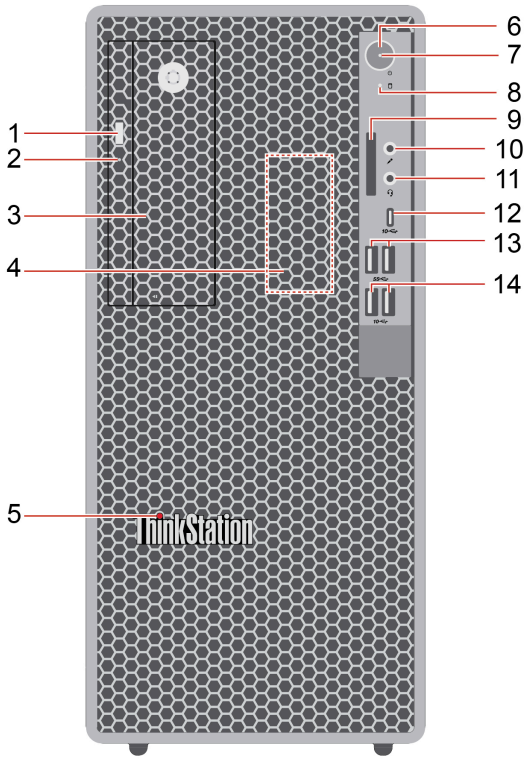

Item	Description	Item	Description
1	Optical drive eject button*	2	Optical drive activity indicator*
3	Flex bay	4	Internal speaker
5	ThinkStation® LED	6	Power button
7	Power indicator	8	Storage drive activity indicator
9	SD-card slot	10	Microphone connector
11	Headset connector	12	USB-C® (3.2 Gen 2) connector
13	USB 3.2 connectors Gen 1	14	USB 3.2 connectors Gen 2

* for selected models

Power indicator

Show the system status of your computer.

- **On:** The computer is starting up or working.
- **Off:** The computer is off or in hibernation mode.
- **Blinking:** The computer is in sleep mode.

© Copyright Lenovo 2024, 2025

Headset connector

The headset connector is compatible with:

- Headphones or earphones with a 3.5mm (0.14 inch), TRS (3-pole) plug
- Headsets with a 3.5mm (0.14 inch), CTIA-compliant TRRS (4-pole) plug

Note: This headset connector does not support standalone external microphones with a TRS (3-pole) plug or headsets with an OMTP-compliant TRRS (4-pole) plug.

Related topics

- “USB specifications” on page 8
- “Use the optical drive (for selected models)” on page 13
- “Use a media card (for selected models)” on page 14

Rear

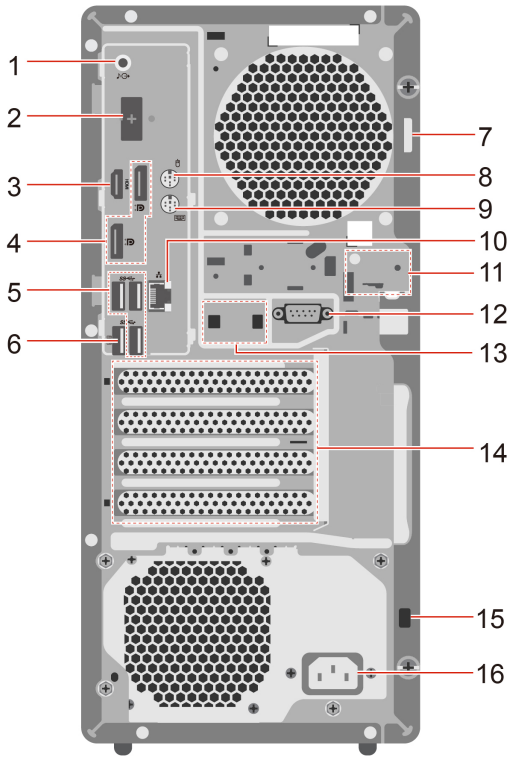

Item	Description	Item	Description
1	Audio line-out connector	2	Optional connector*
3	HDMI™ out connector	4	DisplayPort™ out connectors
5	USB 3.2 connectors Gen 1	6	USB 3.2 connector Gen 1 (with smart power-on feature)
7	Padlock loop	8	PS/2 mouse connector*
9	PS/2 keyboard connector*	10	Ethernet connector
11	E-lock slots	12	Serial connector*
13	Smart cable clip slots	14	PCI-Express card area
15	Security-lock slot	16	Power cord connector

* for selected models

Optional connector

Depending on the computer model, the connector might be a DisplayPort out connector, an HDMI out connector, a USB-C (3.2 Gen 1) connector, or a VGA connector.

Serial connector

Connect an external modem, a serial printer, or other devices that use a serial connector.

Related topics

- “USB specifications” on page 8
- “Connect an external display” on page 10
- “Manage cables with a smart cable clip” on page 10
- “Lock the computer” on page 15
- “Enable or disable the smart power-on feature (for selected models)” on page 22

Internal storage drives

Internal storage drives are devices that your computer uses to read and store data. You can add drives to your computer to increase storage capacity and enable your computer to read other types of media.

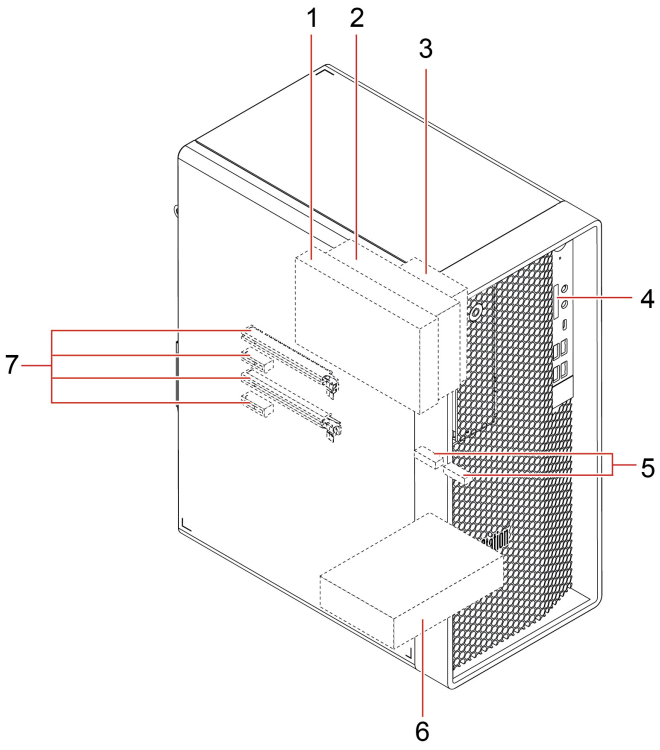

Item	Description	Function
1	Slim-optical-drive cage*	You can install a slim optical drive in this cage.
2	Flex bay	**Note:** The flex bay must be used together with the slim-optical-drive cage. You can install one of the following devices in the flex bay: • 3.5-inch secondary storage drive cage • 3.5-inch front-access storage enclosure In the 3.5-inch secondary storage drive cage or the 3.5-inch font-access storage enclosure, you can install the following storage drives: • 3.5-inch storage drive • 2.5-inch storage drive with a storage drive converter
3	2.5-inch secondary storage drive cage*	You can install a 2.5-inch storage drive in this cage when the flex bay is occupied.
4	SD-card slot	You can install a supported media card into the SD-card slot.
5	M.2 solid-state drive slots	Up to two M.2 solid-state drives are installed in selected models.

Item	Description	Function
6	3.5-inch primary storage drive cage	You can install the following storage drives in this cage: • 3.5-inch storage drive • 2.5-inch storage drive with a storage drive converter
7	PCIe slots	You can install compatible PCIe cards and PCIe solid-state drives in the PCIe card slots.

* for selected models

Features and specifications

For detailed specifications of your computer, go to https://psref.lenovo.com.

Dimensions	• Width: 170 mm (6.7 inches) • Height: 376 mm (14.8 inches) • Depth: 315.4 mm (12.4 inches)
Weight (without packaging)	Maximum configuration as shipped: 9.57 kg (21.1 lb)
Hardware configuration	Type `Device Manager` in the Windows search box and then press Enter. Type the administrator password or provide confirmation, if prompted.
Power supply	• 500-watt automatic voltage-sensing power supply • 750-watt automatic voltage-sensing power supply
Electrical input	• Input voltage: From 100 V ac to 240 V ac • Input frequency: 50/60 Hz
Memory	Up to four double data rate 5 (DDR5) unbuffered dual inline memory modules (UDIMMs) Maximum memory capacity: 128 GB Memory quantity: 1pcs, 2pcs or 4pcs
Storage device	• 3.5-inch hard disk drive* • 2.5-inch solid-state drive* • M.2 solid-state drive* To view the storage drive capacity of your computer, type `Disk Management` in the Windows search box and then press Enter. **Note:** The storage drive capacity indicated by the system is less than the nominal capacity.
Video features	• The integrated graphics card supports the following: – DisplayPort out connector – HDMI out connector – VGA out connector* – USB-C (3.2 Gen 1) connector* • The optional discrete graphics card provides an enhanced video experience and extended capabilities.

Expansion	• SD-card slot (supporting SD card reader*) • Memory slots • M.2 solid-state drive Gen 4 slots • Slim-optical-drive cage* • PCI-Express x1 card slots • PCI-Express x16 Gen 4 graphics card slot • PCI-Express x16 Gen 4 card slot (negotiable link width x4) • Storage drive cages*
Network features	• Bluetooth* • Ethernet LAN • Wireless LAN*

* for selected models

USB specifications

Note: Depending on the model, some USB connectors might not be available on your computer.

Connector name	Description
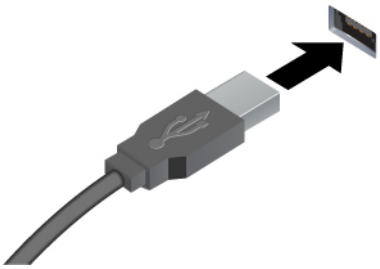 • USB 2.0 connector • USB 3.2 connector Gen 1 • USB 3.2 connector Gen 2	Connect USB compatible devices, such as a USB keyboard, USB mouse, USB storage device, or USB printer.
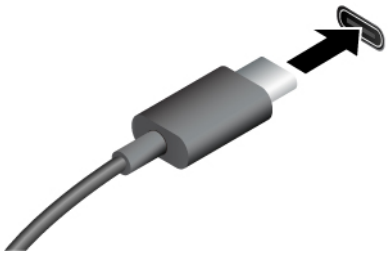 • USB-C (3.2 Gen 1) connector • USB-C (3.2 Gen 2) connector • USB-C (Thunderbolt 3) connector • USB-C (Thunderbolt 4) connector	• Charge USB-C compatible devices with the output voltage and current of 5 V and 3 A. • Connect to an external display: – USB-C to VGA: 1920 x 1200 pixels, 60 Hz – USB-C to DP: 3840 x 2160 pixels, 60 Hz • Connect to USB-C accessories to help expand your computer functionality. To purchase USB-C accessories, go to https://www.lenovo.com/accessories.

Statement on USB transfer rate

Depending on many factors such as the processing capability of the host and peripheral devices, file attributes, and other factors related to system configuration and operating environments, the actual transfer rate using the various USB connectors on this device will vary and will be slower than the data rate listed below for each corresponding device.

USB device	Data rate (Gbit/s)
3.2 Gen 1 / 3.1 Gen 1	5
3.2 Gen 2 / 3.1 Gen 2	10
3.2 Gen 2 × 2	20
Thunderbolt® 3	40
Thunderbolt 4	40

Chapter 2. Get started with your computer

Access networks

This section helps you access networks through connecting to a wired or wireless network.

Connect to the wired Ethernet

Connect your computer to a local network through the Ethernet connector on your computer with an Ethernet cable.

Connect to Wi-Fi networks (for selected models)

Click the network icon in the Windows® notification area, and then select a network for connection. Provide required information, if needed.

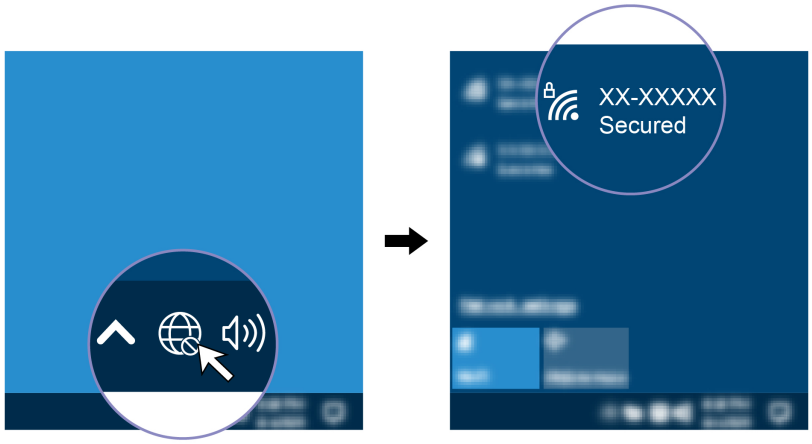

Connect an external display

Connect a projector or a monitor to your computer to give presentations or expand your workspace.

Connect a wireless display

Ensure that both your computer and the wireless display support Miracast®.

Press Windows logo key + K and then select a wireless display to connect.

Change display settings

1. Right-click a blank area on the desktop and select display settings.
2. Select the display that you want to configure and change display settings of your preference.

Manage cables with a smart cable clip

Note: You can purchase a smart cable clip from Lenovo.

© Copyright Lenovo 2024, 2025

To manage cables of devices (such as the keyboard and the mouse) with a smart cable clip:

1. Pull the cables through the dents in the clip.
2. Install the clip as shown.

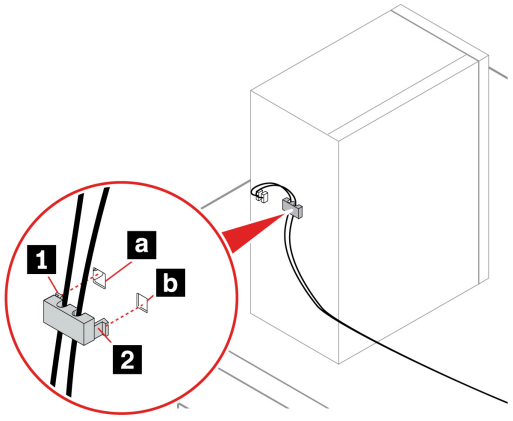

Chapter 3. Explore your computer

The Vantage app

The Vantage app is preinstalled on your computer. To diagnose problems with the Vantage app:

1. Type `Vantage` in the Windows search box and press Enter.
2. Follow the on-screen instructions and run a hardware scan.

If you are unable to isolate and resolve the problem after running the Vantage app, save and print the log files created by the program. You might need the log files when you speak to a Lenovo technical support representative.

Set the power plan

For ENERGY STAR® compliant computers, the following power plan takes effect when your computers have been idle for a specified duration:

- Turn off the display: After 10 minutes
- Put the computer to sleep: After 25 minutes

To awaken the computer from Sleep mode, press any key on your keyboard.

To reset the power plan:

1. Type `Power Options` in the Windows search box and then press Enter.
2. Choose or customize a power plan of your preference.

Transfer data

Quickly share your files using the built-in Bluetooth technology among devices with the same features. You also can install a disc or media card to transfer data.

Connect to a Bluetooth-enabled device (for selected models)

You can connect all types of Bluetooth-enabled devices to your computer, such as a keyboard, a mouse, a smartphone, or speakers. Place the device that you are attempting to connect to less than 10 meters (33 feet) from the computer.

© Copyright Lenovo 2024, 2025

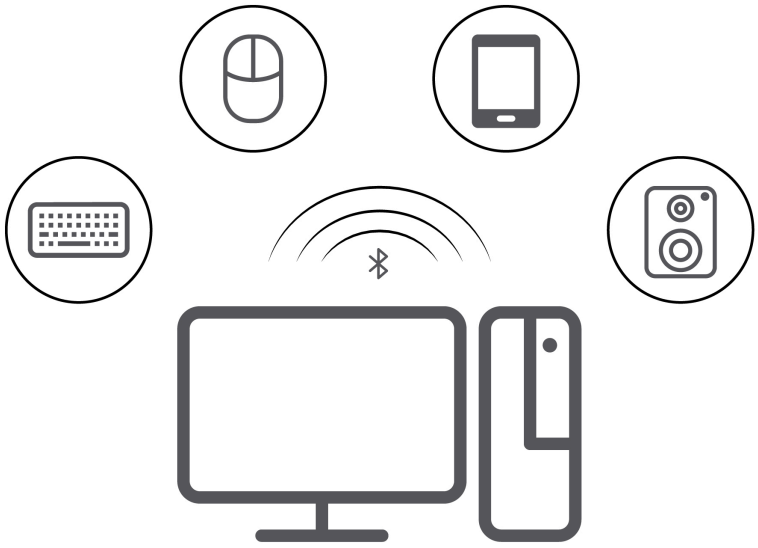

1. Type `Bluetooth` in the Windows search box and then press Enter.
2. Turn on Bluetooth, if it is off.
3. Select a Bluetooth device, and then follow the on-screen instructions.

Use the optical drive (for selected models)

If your computer has an optical drive, read the following information.

Know the type of your optical drive

1. Type `Device Manager` in the Windows search box and then press Enter. Type the administrator password or provide confirmation, if prompted.
2. Select an optical drive, and then follow the on-screen instructions.

Install or remove a disc

1. With the computer on, press the eject button on the optical drive. The tray slides out of the drive.
2. Insert a disc into the tray or remove a disc from the tray, and then push the tray back into the drive.

Note: If the tray does not slide out of the drive when you press the eject button, turn off the computer. Then, insert a straightened paper clip into the emergency-eject hole adjacent to the eject button. Use the emergency eject only in an emergency.

Record a disc

1. Insert a recordable disc into the optical drive that supports recording.
2. Do one of the following:
   - Type `AutoPlay` in the Windows search box and then press Enter. Turn on **Use AutoPlay for all media and devices**.
   - Open **Windows Media Player**.
   - Double-click the ISO file.
3. Follow the on-screen instructions.

Use a media card (for selected models)

If your computer has a SD-card slot, read the following information.

Install a media card

1. Locate the SD-card slot.
2. Ensure that the metal contacts on the card are facing the ones in the SD-card slot. Insert the card firmly into the SD-card slot until it is secured in place.

Remove a media card

Attention: Before removing the card:

1. Click the triangular icon in the Windows notification area to show hidden icons. Right-click the icon prompting you to safely remove hardware and eject media.
2. Select the corresponding item to eject the card from the Windows operating system.
3. Press the card and remove it from your computer. Store the card safely for future use.

Purchase accessories

Lenovo has a number of hardware accessories and upgrades to help expand the capabilities of your computer. Options include memory modules, storage devices, network cards, power adapters, keyboards, mice, and more.

To shop at Lenovo, go to https://www.lenovo.com/accessories.

Chapter 4. Secure your computer and information

Lock the computer

Note: Lenovo makes no comments, judgments, or warranties about the function, quality, or performance of the locking device and security feature. You can purchase computer locks from Lenovo.

Padlock

Locking the computer cover through a padlock prevents unauthorized access to the inside of your computer.

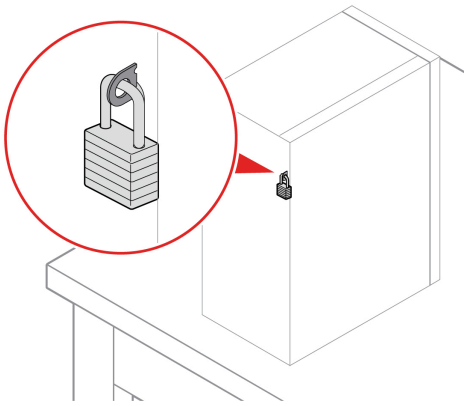

Kensington-style cable lock

Lock your computer to a desk, table, or other fixtures through a Kensington-style cable lock.

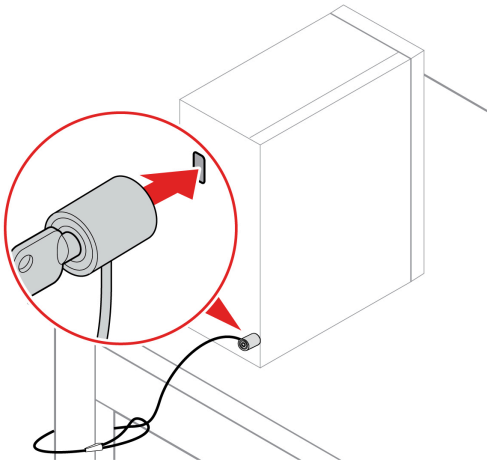

© Copyright Lenovo 2024, 2025

E-lock

Your computer might have a security lock solution installed to protect the computer from unauthorized tampering of the internal components. Using the E-Lock, you can mechanically lock or unlock the computer cover.

To enable or disable the E-Lock:

1. Restart the computer. When the logo screen is displayed, press F1 or Fn+F1.
2. Select **Security → Electronic Lock** to enable or disable the E-lock.
3. Press F10 or Fn+F10 to save the changes and exit. Your computer will restart automatically and then changes take effect.

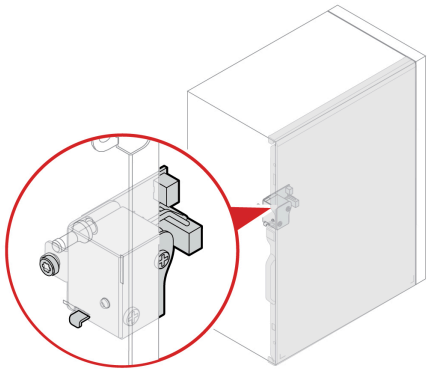

Log in to your computer securely

This section provides secure ways to log in to your computer.

UEFI BIOS passwords

You can set passwords in UEFI (Unified Extensible Firmware Interface) BIOS (Basic Input/Output System) to strengthen the security of your computer.

Password types

You can set a power-on password, supervisor password, system management password, or hard disk password in UEFI BIOS to prevent unauthorized access to your computer. However, you are not prompted to enter any UEFI BIOS password when your computer resumes from sleep mode.

- Power-on password

  When a power-on password is set, you are prompted to enter a valid password each time the computer is turned on.

- Supervisor password

  Setting a supervisor password deters unauthorized users from changing configuration settings. If you are responsible for maintaining the configuration settings of several computers, you might want to set a supervisor password.

  When a supervisor password is set, you are prompted to enter a valid password each time you try to enter the BIOS menu.

  If both the power-on password and supervisor password are set, you can enter either password. However, you must use your supervisor password to change any configuration settings.

- Hard disk password

Setting a hard disk password prevents unauthorized access to the data on the storage drive. When a hard disk password is set, you are prompted to enter a valid password each time you try to access the storage drive.

Note: After you set a hard disk password, your data on the storage drive is protected even if the storage drive is removed from one computer and installed in another.

- System management password (for selected models)

  You can enable the system management password to have the same authority as the supervisor password to control security related features. To customize the authority of the system management password through the UEFI BIOS menu:

  1. Restart the computer. When the logo screen is displayed, press F1 or Fn+F1.
  2. Select **Security → System Management Password Access Control**.
  3. Follow the on-screen instructions.

  If you have set both the supervisor password and the system management password, the supervisor password overrides the system management password.

Set, change, and remove a password

Before you start, print these instructions.

1. Restart the computer. When the logo screen is displayed, press F1 or Fn+F1.
2. Select **Security**.
3. Depending on the password type, select **Set Supervisor Password**, **Set Power-On Password**, **Set System Management Password**, or **Hard Disk Password** and press Enter.
4. Follow the on-screen instructions to set, change, or remove a password.
5. Press F10 or Fn+F10 to save the changes and exit.

You should record your passwords and store them in a safe place. If you forget the passwords, contact a Lenovo-authorized service provider.

Note: If the hard disk password is forgotten, Lenovo cannot remove the password or recover data from the storage drive.

Use software security solutions

This section provides software solutions to secure your computer and information.

Windows firewalls

A firewall can be hardware, software, or a combination of both depending on the level of security required. Firewalls work on a set of rules to determine which inbound and outbound connections are authorized. If the computer is preinstalled with a firewall program, it helps protect against computer Internet security threats, unauthorized access, intrusions, and Internet attacks. It also protects your privacy. For more information about how to use the firewall program, refer to the help system of your firewall program.

To use Windows firewalls:

1. Type `Control Panel` in the Windows search box and then press Enter. View by large icons or small icons.
2. Click **Windows Defender Firewall**, and then follow the on-screen instructions.

Computrace Agent software embedded in firmware (for selected models)

The Computrace Agent software is an IT asset management and computer theft recovery solution. The software detects if changes have been made on the computer, such as hardware, software, or the computer call-in location. You might have to purchase a subscription to activate the Computrace Agent software.

Use BIOS security solutions

This section provides BIOS solutions to secure your computer and information.

Wipe the storage drive data

It is recommended that you wipe the storage drive data before recycling the storage drive or the computer.

To wipe the storage drive data:

1. Restart the computer. When the logo screen is displayed, press F1 or Fn+F1.
2. Select **Security → secure wipe → Enabled**.
3. Press F10 or Fn+F10 to save the changes and exit.
4. Restart the computer. When the logo screen is displayed, press F12 or Fn+F12.
5. Select **App Menu → secure wipe** and press Enter.
6. Select the storage drive you will wipe and click **NEXT**.
7. Select the entire storage drive or partition to wipe as desired.
8. Select the method as desired and click **NEXT**.
9. Click **Yes** to confirm your option when the prompting window is displayed.
10. If you have set a hard disk password for the storage drive, enter the password. Otherwise, set a temporary password following the on-screen instructions. Then, click **NEXT**. The wiping process begins.

    Note: Duration of the wiping process varies depending on the storage drive capacity.
11. Click **Reboot** when you are prompted to reset the system, and then one of the following will happen:
    - If the system storage drive data is wiped, you will be prompted that no operating system is found.
    - If the non-system storage drive data is wiped, the computer restarts automatically.

Cover presence switch

The cover presence switch prevents the computer from logging in to the operating system when the computer cover is not properly installed or closed.

To enable or disable the cover presence switch on the system board:

1. Restart the computer. When the logo screen is displayed, press F1 or Fn+F1.
2. Select **Security → Cover Tamper Detected** and press Enter.
3. Select **Enabled** or **Disabled** and press Enter.
4. Press F10 or Fn+F10 to save the changes and exit.

If the cover presence switch is enabled and the computer cover is not correctly installed or closed, an error message will be displayed when you turn on the computer. To bypass the error message and log in to the operating system:

1. Properly install or close the computer cover.
2. Enter the BIOS menu, save and then exit.

Intel BIOS guard

The Intel® BIOS Guard module cryptographically verifies all BIOS updates. This hardware-based security helps prevent software and malware attacks on the computers BIOS.

Smart USB Protection

The Smart USB Protection function is a security function that helps prevent data from being copied from the computer to USB storage devices connected to the computer. You can set the Smart USB Protection function to one of the following modes:

- **Disabled** (default setting): You can use the USB storage devices without limitation.
- **Read Only**: You cannot copy data from the computer to the USB storage devices. However, you can access data on the USB storage devices.
- **No Access**: You cannot access the USB storage devices from the computer.

To configure the Smart USB Protection function:

1. Restart the computer. When the logo screen is displayed, press F1 or Fn+F1.
2. Select **Security → Smart USB Protection** and press Enter.
3. Select the desired setting and press Enter.
4. Press F10 or Fn+F10 to save the changes and exit.

Absolute Persistence (for computers with Windows operating system and purchased outside mainland China)

Absolute Persistence technology is embedded in BIOS. It detects changes that happen on the hardware, software, or the call-in location. It keeps you always knowing what condition the computer is in. To activate the technology, you have to purchase a subscription to Absolute.

Chapter 5. UEFI BIOS

What is UEFI BIOS

Note: The operating system settings might override any similar settings in UEFI BIOS.

UEFI BIOS is the first program that the computer runs when the computer is turned on. UEFI BIOS initializes the hardware components and loads the operating system and other programs. Your computer comes with a setup program with which you can change UEFI BIOS settings.

Enter the BIOS menu

Restart the computer. When the logo screen is displayed, press F1 or Fn+F1 to enter the BIOS menu.

Note: If you have set BIOS passwords, enter the correct passwords when prompted. You also can select **No** or press Esc to skip the password prompt and enter the BIOS menu. However, you cannot change the system configurations that are protected by passwords.

Navigate in the BIOS interface

Attention: The default configurations are already optimized for you in **boldface**. Improper change of the configurations might cause unexpected results.

Depending on your keyboard, you can navigate in the BIOS interface by pressing the following keys, or combinations of Fn and the following keys:

Key	Function
F1 or Fn+F1	General Help
Esc or Fn+Esc	Exit the submenu
↑ ↓ or Fn+↑ ↓	Locate an item
← → or Fn+← →	Move keyboard focus
+/– or Fn++/–	Change value
Enter	Enter the submenu
F9 or Fn+F9	Setup Defaults
F10 or Fn+F10	Save and exit

Change the display mode of UEFI BIOS (for selected models)

You can use UEFI BIOS in the graphic mode or the text mode according to your needs.

The keys on the keyboard used to perform various tasks are displayed at the bottom of the screen. In addition to the keyboard, you also can use the mouse to make selections.

To change the display mode of UEFI BIOS:

1. Restart the computer. When the logo screen is displayed, press F1 or Fn+F1.
2. Select **Main → Setup Mode Select** and press Enter.

© Copyright Lenovo 2024, 2025

3. Set the display mode as desired.

Set the system date and time

1. Restart the computer. When the logo screen is displayed, press F1 or Fn+F1.
2. Select **Main → System Time & Date** and press Enter.
3. Set the system date and time as desired.
4. Press F10 or Fn+F10 to save the changes and exit.

Change the boot priority order

If the computer does not boot from a device as expected, you can change the boot priority order permanently or select a temporary boot device.

Change the boot priority order permanently

1. Depending on the type of the storage device, do one of the following:
   - If the storage device is internal, go to step 2.
   - If the storage device is a disc, ensure that the computer is on or turn on the computer. Then, insert the disc into the optical drive.
   - If the storage device is an external device other than a disc, connect the storage device to the computer.
2. Restart the computer. When the logo screen is displayed, press F1 or Fn+F1.
3. Select **Startup → Boot Priority Order**, and then follow the on-screen instructions to change the boot priority order.
4. You can also select the first priority device group by selecting **Startup → First Boot Device**, and then follow the on-screen instructions to select the first boot device within this group. Your computer will boot from the first boot device before trying the boot priority order you set in the previous step.
5. Press F10 or Fn+F10 to save the changes and exit.

Select a temporary boot device

Note: Not all discs and storage drives are bootable.

1. Depending on the type of the storage device, do one of the following:
   - If the storage device is internal, go to step 2.
   - If the storage device is a disc, ensure that the computer is on or turn on the computer. Then, insert the disc into the optical drive.
   - If the storage device is an external device other than a disc, connect the storage device to the computer.
2. Restart the computer. When the logo screen is displayed, press F12 or Fn+F12.
3. Select the storage device as desired and press Enter.

If you want to change the boot priority order permanently, select **Enter Setup** on **Startup Device Menu** and press Enter to enter the BIOS menu.

Enable or disable the configuration change detection feature

If you enable configuration change detection, when the POST detects configuration changes of some hardware devices (such as storage drives or memory modules), an error message will be displayed when you turn on the computer.

To enable or disable the configuration change detection feature:

1. Restart the computer. When the logo screen is displayed, press F1 or Fn+F1.
2. Select **Security → Configuration Change Detection** and press Enter.
3. Enable or disable the feature as desired.
4. Press F10 or Fn+F10 to save the changes and exit.

To bypass the error message and log in to the operating system, press F2 or Fn+F2. To clear the error message, enter the BIOS menu, save and then exit.

Enable or disable the automatic power-on feature

The Automatic Power On item in UEFI BIOS provides various options for you to make your computer start up automatically.

To enable or disable the automatic power-on feature:

1. Restart the computer. When the logo screen is displayed, press F1 or Fn+F1.
2. Select **Power → Automatic Power On** and press Enter.
3. Select the feature as desired and press Enter.
4. Enable or disable the feature as desired.
5. Press F10 or Fn+F10 to save the changes and exit.

Enable or disable the smart power-on feature (for selected models)

Ensure that the keyboard is connected to a USB connector supporting the smart power-on feature. With the smart power-on feature enabled, you can start up or wake up the computer from the hibernation mode by pressing Alt+P.

To enable or disable the smart power-on feature:

1. Restart the computer. When the logo screen is displayed, press F1 or Fn+F1.
2. Select **Power → Smart Power On** and press Enter.
3. Enable or disable the feature as desired.
4. Press F10 or Fn+F10 to save the changes and exit.

Change the ITS performance mode

You can adjust the acoustic and thermal performance of your computer by changing the ITS performance mode. Three options are available:

- **Balance mode**: The computer works at the balance mode with balanced noise and better performance.
- **Performance mode** (default setting): The computer works at the best performance with normal acoustic level.

  Note: The term “best” only refers to the best effect among different settings of the product itself.
- **Full Speed**: All fans in the computer will run at full speed.

To change the ITS performance mode:

1. Restart the computer. When the logo screen is displayed, press F1 or Fn+F1.
2. Select **Power → Intelligent Cooling** and press Enter.
3. Select **Performance Mode** and press Enter.

4. Set the performance mode as desired.
5. Press F10 or Fn+F10 to save the changes and exit.

Change BIOS settings before installing a new operating system

BIOS settings vary by operating system. Change the BIOS settings before installing a new operating system.

Microsoft constantly makes updates to the Windows operating system. Before installing a particular Windows version, check the compatibility list for the Windows version. For details, go to: https://support.lenovo.com/us/en/solutions/windows-support

To change the BIOS settings:

1. Restart the computer. When the logo screen is displayed, press F1 or Fn+F1.
2. From the main interface, select **Security → Secure Boot** and press Enter.
3. Depending on the operating system to be installed, do one of the following:
   - To install a Windows operating system that supports secure boot, select **Enabled** for **Secure Boot**.
   - To install an operating system that does not support secure boot, such as some Linux operating systems, select **Disabled** for **Secure Boot**.
4. Press F10 or Fn+F10 to save the changes and exit.

Update the UEFI BIOS

When you install a new program, device driver, or hardware component, you might need to update the UEFI BIOS.

Download and install the latest UEFI BIOS update package by one of the following methods:

From the Vantage app

Follow the instructions to update the UEFI BIOS from the Vantage app.

Step 1. Open the Vantage app, and then click **Device → System Update**.

Step 2. If the latest UEFI BIOS update package is available, follow the on-screen instructions to download and install the package.

From the Lenovo Support Web site

Follow the instructions to update the UEFI BIOS from the Lenovo Support Web site.

Step 1. Go to https://pcsupport.lenovo.com and select the entry for your computer.

Step 2. Click **Drivers & Software → Manual Update → BIOS/UEFI**.

Step 3. Follow the on-screen instructions to download and install the latest UEFI BIOS update package.

From the Windows Update

Follow the instructions to update the UEFI BIOS from the Windows Update.

Step 1. Type **Settings** in the Windows search box and press Enter.

Step 2. Click **Windows Update → Check for Updates**.

Step 3. If a BIOS update package appears in your update list, click **Download or Install** to initiate the update.

Remote update via Windows Remote Desktop

Step 1. Establish a Remote Desktop Protocol (RDP) connection to the target computer.

Step 2. Through the RDP interface, remotely update the UEFI BIOS using one of the following methods:

- “From the Vantage app” on page 23
- “From the Lenovo Support Web site” on page 23
- “From the Windows Update” on page 23

Step 3. After installation, the system will automatically reboot multiple times (around 20 minutes). The remote connection will terminate during reboots — reconnect after the final reboot to verify successful update.

Chapter 6. RAID

What is RAID

Redundant Array of Independent Disks (RAID) is a technology that provides increased storage functions and reliability through redundancy. It also can improve data storage reliability and fault tolerance compared with single-drive storage systems. Data loss resulting from a drive failure can be prevented by reconstructing missing data from the remaining drives.

When a group of independent physical storage drives is set up to use RAID technology, they are in a RAID array. This array distributes data across multiple storage drives, but the array appears to the host computer as one single storage unit. Creating and using RAID arrays provides high performance, such as the expedited I/O performance, because several drives can be accessed simultaneously.

RAID Level

Your computer must have the minimum number of SATA or NVMe storage drives installed for the supported level of RAID below:

- RAID 0: striped disk array
  - Consisting of at least two SATA or NVMe storage drives
  - Supported strip size: 4 KB, 8 KB, 16 KB, 32 KB, 64 KB, or 128 KB
  - Better performance without fault tolerance
- RAID 1: mirrored disk array
  - Consisting of two SATA or NVMe storage drives
  - Improved reading performance and 100% redundancy
- RAID 5: block-level striped disk array with distributed parity
  - Consisting of at least three SATA storage drives
  - Supported strip size: 16 KB, 32 KB, 64 KB, or 128 KB
  - Better performance and fault tolerance
- RAID 10: striped and mirrored disk array
  - Consisting of at least four SATA storage drives
  - Supported strip size: 4 KB, 8 KB, 16 KB, 32 KB, or 64 KB
  - Better performance without fault tolerance
  - Improved reading performance and 100% redundancy

Configure the system BIOS to enable SATA RAID functionality

To enable SATA RAID functionality:

1. Restart the computer. When the logo screen is displayed, press F1 or Fn+F1.
2. Select **Devices → Storage Setup** and press Enter.
3. Select **Configure Storage as** and press Enter.
4. Select **RAID** and press Enter.
5. Press F10 or Fn+F10 to save the changes and exit.

© Copyright Lenovo 2024, 2025

Configure RAID in UEFI mode

This section provides instructions on how to configure RAID in UEFI mode.

Create RAID volumes in UEFI mode

Attention: All the existing data stored on the selected drives will be erased while the RAID volume is being created.

To create RAID volumes:

1. Restart the computer. When the logo screen is displayed, press F1 or Fn+F1.
2. Select **Devices → Storage Setup** and press Enter.
3. Select **Intel (R) Rapid Storage Technology** and press Enter.
4. Select **Create RAID Volume** and press Enter.
5. Select **Name** and press Enter. When prompted, type a proper RAID Volume name in the field.
6. Select **RAID Level** and press Enter. When prompted, select a RAID level in the field.
7. Use the arrow keys and the space key to mark individual physical storage drives to be added in the RAID volume.
8. Select **Strip Size** and press Enter. When prompted, select a strip size in the field.
9. Select **Capacity** and type a volume size in the field.
10. Select **Create Volume** and press Enter to initiate volume creation.

Delete RAID volumes in UEFI mode

Attention: All the existing data stored on the selected drives will be erased after you delete RAID volumes.

To delete RAID volumes:

1. Restart the computer. When the logo screen is displayed, press F1 or Fn+F1.
2. Select **Devices → Storage Setup** and press Enter.
3. Select **Intel (R) Rapid Storage Technology** and press Enter.
4. Select the RAID volume to be deleted and press Enter.
5. Select **Delete** and press Enter.
6. Select **Yes** to confirm the deletion of the selected RAID volume. Deleting a RAID volume will reset the storage drives to non-RAID.

Reset storage drives to non-RAID in UEFI mode

To reset your storage drives to non-RAID:

1. Restart the computer. When the logo screen is displayed, press F1 or Fn+F1.
2. Select **Devices → Storage Setup** and press Enter.
3. Select **Intel (R) Rapid Storage Technology** and press Enter.
4. Select the RAID volumes and press Enter to view the detailed information. Select the storage drives you want to reset to non-RAID and then press Enter.
5. Select **Reset to Non-RAID** and press Enter.
6. Select **Yes** to reset the storage drives to non-RAID.

Chapter 7. Diagnostics

Lenovo diagnostic tools

Use diagnostic solutions to test hardware components and report operating-system-controlled settings that interfere with the correct operation of your computer.

For information about Lenovo diagnostic tools, go to:
https://pcsupport.lenovo.com/lenovodiagnosticsolutions

The Vantage app

The Vantage app is preinstalled on your computer. To diagnose problems with the Vantage app:

1. Type `Vantage` in the Windows search box and press Enter.
2. Follow the on-screen instructions and run a hardware scan.

If you are unable to isolate and resolve the problem after running the Vantage app, save and print the log files created by the program. You might need the log files when you speak to a Lenovo technical support representative.

© Copyright Lenovo 2024, 2025

Chapter 8. CRU replacement

What is CRU

Customer Replaceable Units (CRUs) are parts that can be replaced by the customer. Lenovo computers contain the following types of CRUs:

- **Self-service CRUs:** Refer to parts that can be replaced easily by customer themselves or by trained service technicians at an additional cost.
- **Optional-service CRUs:** Refer to parts that can be replaced by customers with a greater skill level. Trained service technicians can also provide service to replace the parts under the type of warranty designated for the customer's machine.

If you intend on installing the CRU, Lenovo will ship the CRU to you. CRU information and replacement instructions are shipped with your product and are available from Lenovo at any time upon request. You might be required to return the defective part that is replaced by the CRU. When return is required: (1) return instructions, a prepaid shipping label, and a container will be included with the replacement CRU; and (2) you might be charged for the replacement CRU if Lenovo does not receive the defective CRU within thirty (30) days of your receipt of the replacement CRU. For full details, see the Lenovo Limited Warranty documentation at:
https://www.lenovo.com/warranty/llw_02

CRU list

The following is the CRU list of your computer.

Self-service CRUs

- Chassis beam*
- Computer cover
- Front bezel
- Keyboard*
- M.2 solid-state drive*
- M.2 solid-state drive bracket*
- M.2 solid-state drive heat sink*
- Memory module
- Mouse*
- Slim optical drive*
- Slim-optical-drive bracket*
- Slim-optical-drive cage*
- Power cord
- Primary storage drive*
- Primary storage drive bracket*
- Primary storage drive cage*
- Secondary storage drives*
- Secondary storage drive brackets*

© Copyright Lenovo 2024, 2025

- Secondary storage drive cages*
- Storage drive converters*

Optional-service CRUs

- E-lock*
- Front fan*
- Graphics card and plastic holder*
- Heat-sink-and-fan assembly
- PCI-Express card*
- Power supply assembly
- Rear fan*

* for selected models

Remove or replace a CRU

This section provides instructions on how to remove or replace a CRU.

Computer cover

Prerequisite

Before you start, read *Generic Safety and Compliance Notices*, and print the following instructions.



Before you open the computer cover, turn off the computer and wait several minutes until the computer is cool.

For access, do the following:

1. Remove any media from the drives and turn off all connected devices and the computer.
2. Disconnect all power cords from electrical outlets and disconnect all cables from the computer.
3. Unlock any locking device that secures the computer cover.
4. Lay down the computer to place the computer cover facing up.

Removal steps

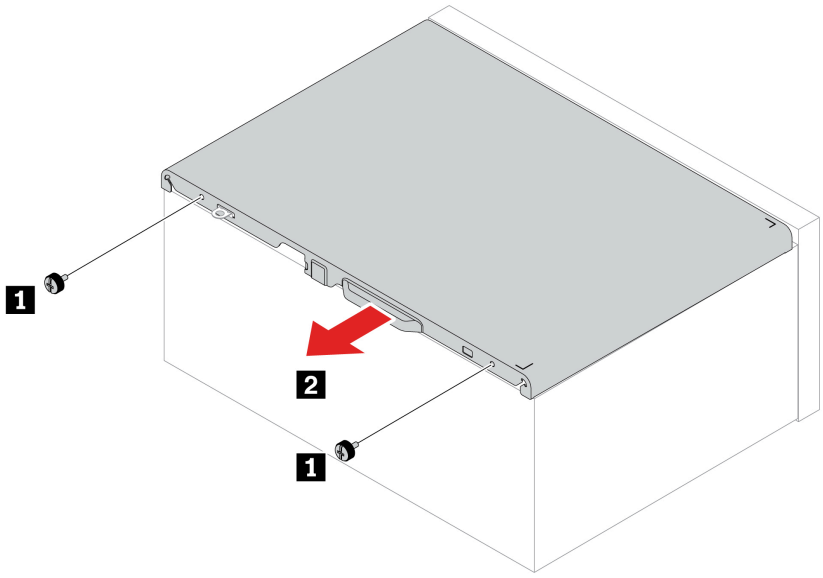

Note: If a locking device is available, use it to lock the computer after installing the computer cover.

Slim optical drive

Prerequisite

Before you start, read *Generic Safety and Compliance Notices*, and print the following instructions.

For access, do the following:

1. Remove the “Computer cover” on page 29.
2. Disconnect the signal and power cable from the slim optical drive.

Removal steps

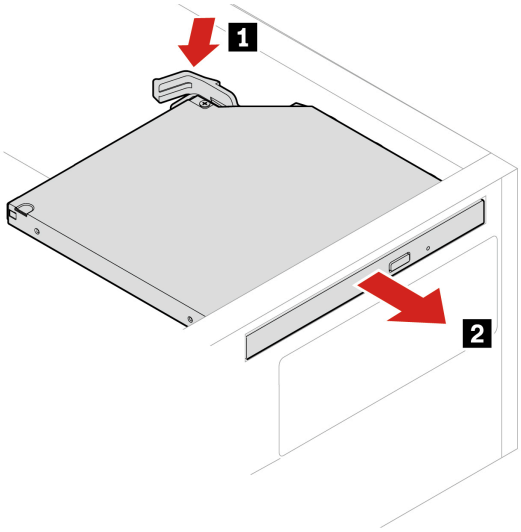

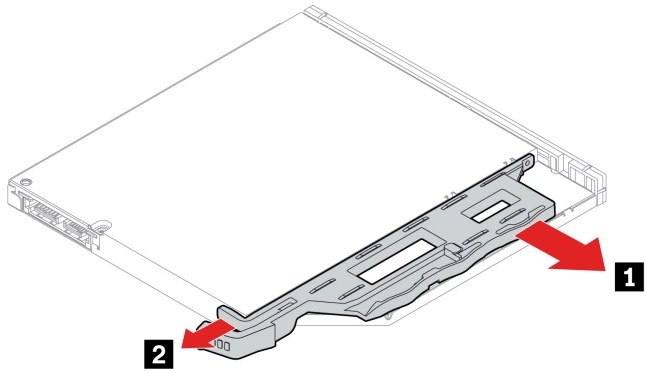

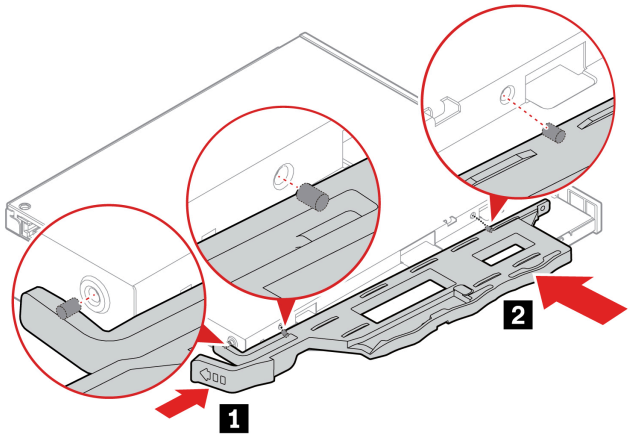

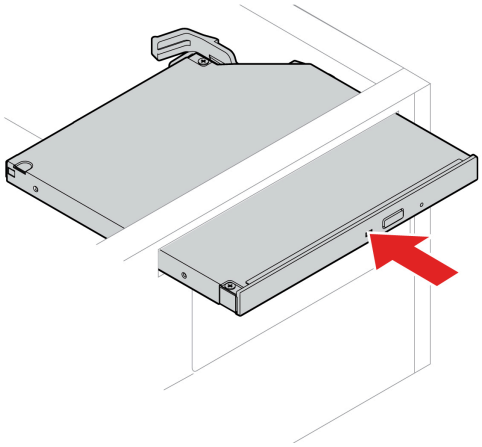

Front bezel

Prerequisite

Before you start, read *Generic Safety and Compliance Notices*, and print the following instructions.

For access, remove these parts in order, if any:

- “Computer cover” on page 29
- “Slim optical drive” on page 30

.

Replacement procedure

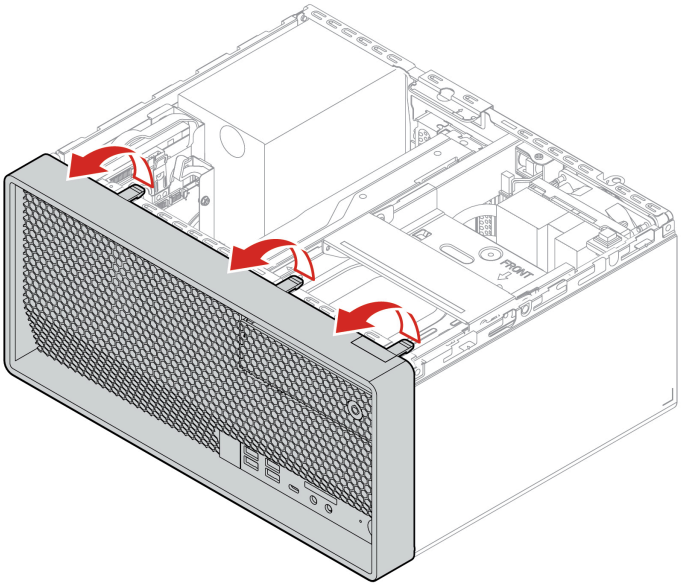

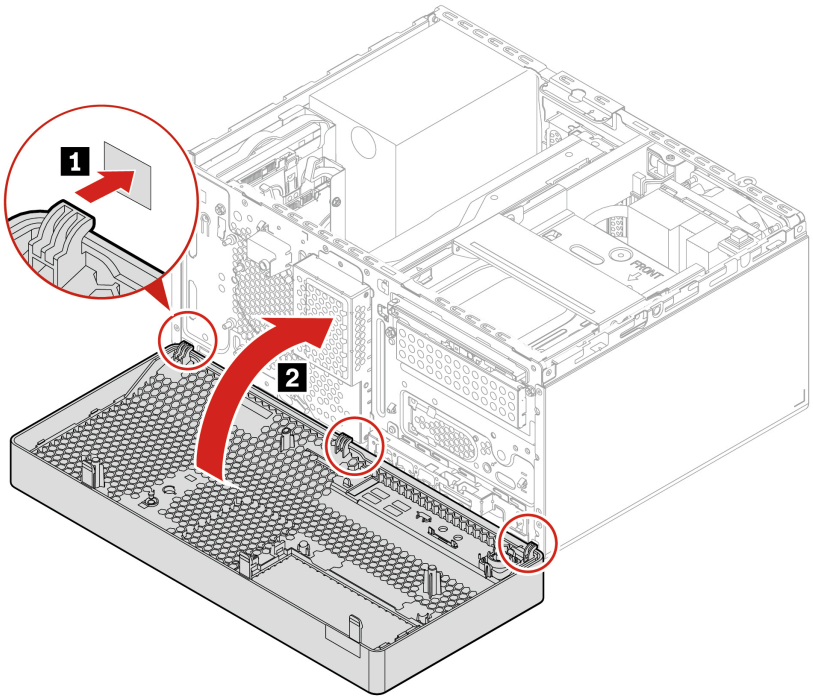

Primary storage drive

Prerequisite

Before you start, read *Generic Safety and Compliance Notices*, and print the following instructions.

Attention: The internal storage drive is sensitive. Inappropriate handling might cause damage and permanent loss of data. When handling the internal storage drive, observe the following guidelines:

- Replace the internal storage drive only for upgrade or repair. The internal storage drive is not designed for frequent changes or replacement.
- Before replacing the internal storage drive, make a backup copy of all the data that you want to keep.
- Do not touch the contact edge of the internal storage drive. Otherwise, the internal storage drive might get damaged.
- Do not apply pressure to the internal storage drive.
- Do not make the internal storage drive subject to physical shocks or vibration. Put the internal storage drive on a soft material, such as cloth, to absorb physical shocks.

Removal steps of the 3.5-inch primary storage drive and bracket

1. Remove the “Computer cover” on page 29.
2. Disconnect the signal cable and the power cable from the 3.5-inch primary storage drive.
3. Remove the 3.5-inch primary storage drive and bracket.

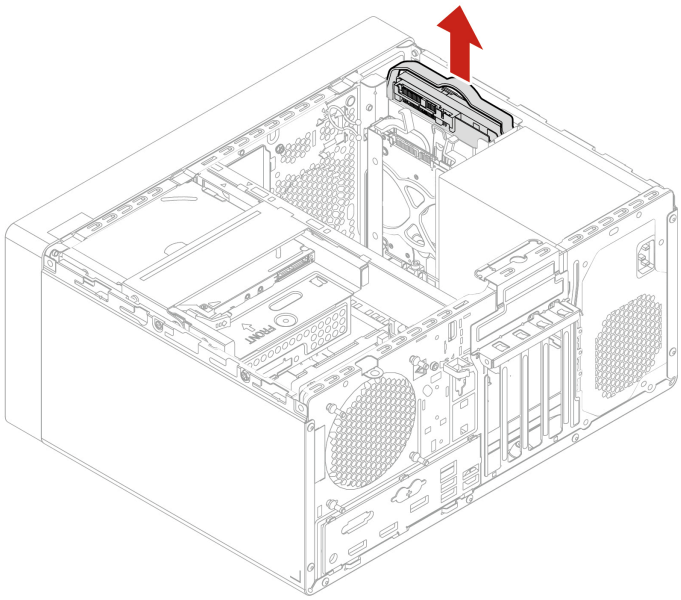

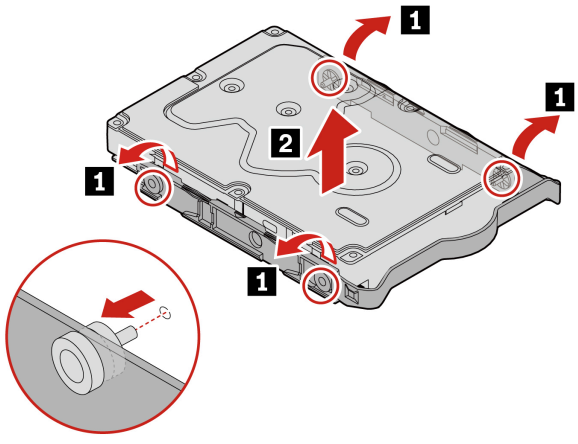

Removal steps of the 2.5-inch primary storage drive, Type-1 storage drive converter, and bracket

1. Remove the “Computer cover” on page 29.
2. Disconnect the signal cable and the power cable from the 2.5-inch primary storage drive.

3. Remove the 2.5-inch primary storage drive, Type-1 storage drive converter, and bracket.

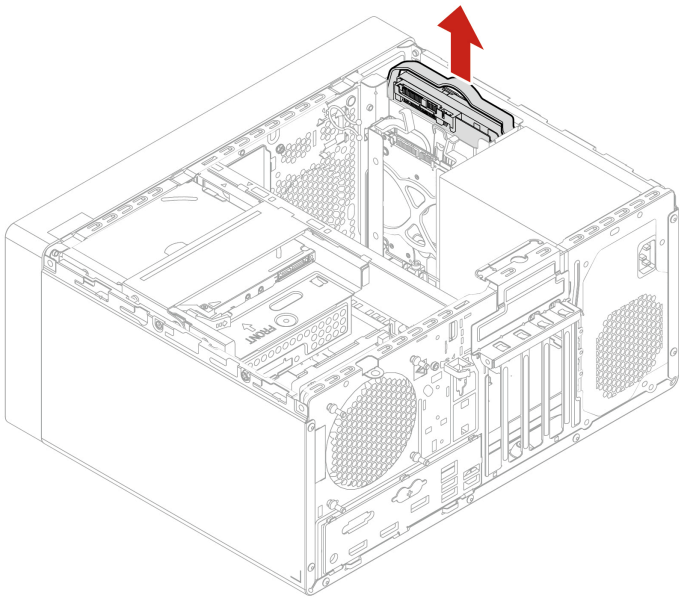

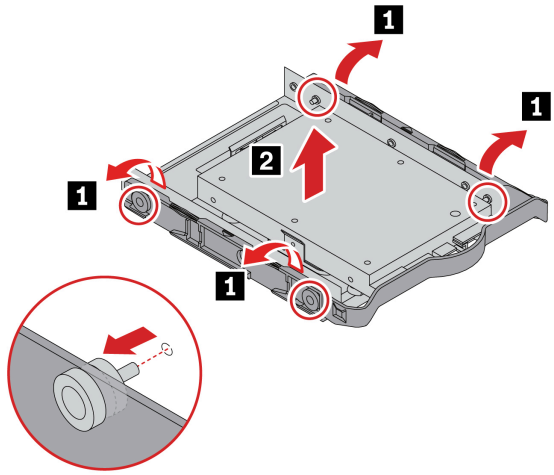

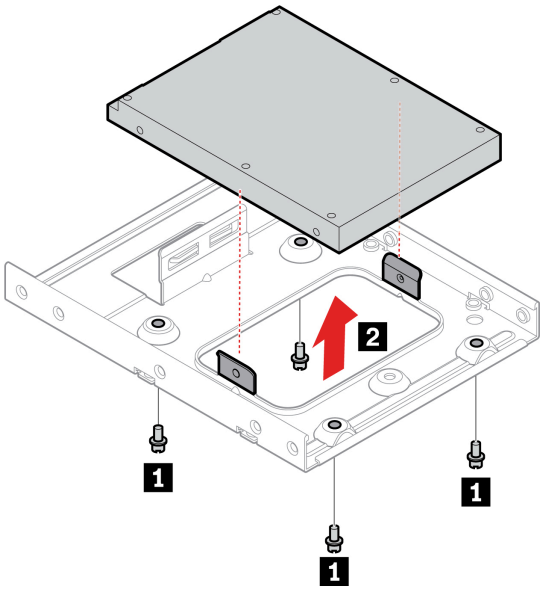

3.5-inch primary storage drive cage

Prerequisite

Before you start, read *Generic Safety and Compliance Notices*, and print the following instructions.

Attention: The internal storage drive is sensitive. Inappropriate handling might cause damage and permanent loss of data. When handling the internal storage drive, observe the following guidelines:

- Replace the internal storage drive only for upgrade or repair. The internal storage drive is not designed for frequent changes or replacement.
- Before replacing the internal storage drive, make a backup copy of all the data that you want to keep.
- Do not touch the contact edge of the internal storage drive. Otherwise, the internal storage drive might get damaged.
- Do not apply pressure to the internal storage drive.
- Do not make the internal storage drive subject to physical shocks or vibration. Put the internal storage drive on a soft material, such as cloth, to absorb physical shocks.

For access, remove these parts in order, if any:

- “Computer cover” on page 29
- “Slim optical drive” on page 30
- “Front bezel” on page 31
- “Primary storage drive” on page 32

Removal steps

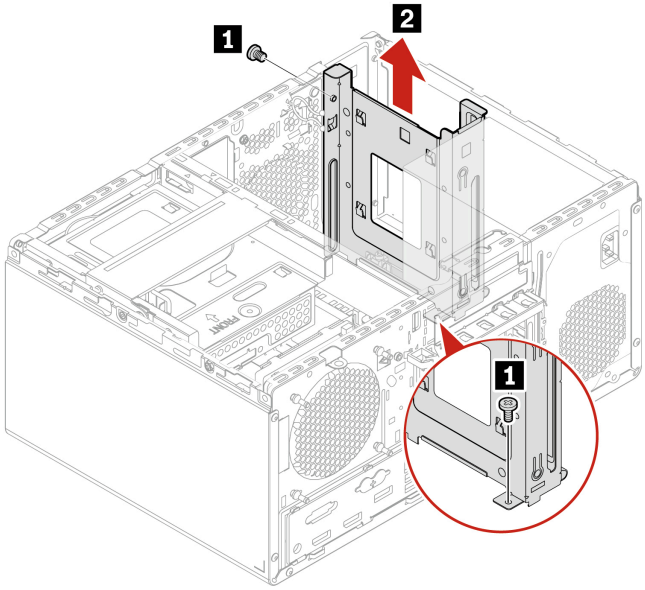

Slim-optical-drive cage

Prerequisite

Before you start, read *Generic Safety and Compliance Notices*, and print the following instructions.

For access, do the following:

1. Remove these parts in order, if any:
   - “Computer cover” on page 29
   - “Slim optical drive” on page 30
   - “Front bezel” on page 31
2. Disconnect the signal cable and power cable (if any) from the secondary storage drive under the slim-optical-drive.

Replacement procedure

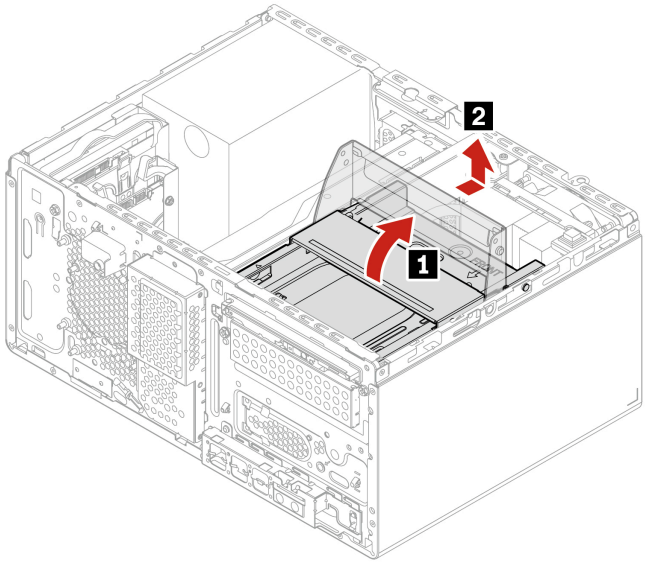

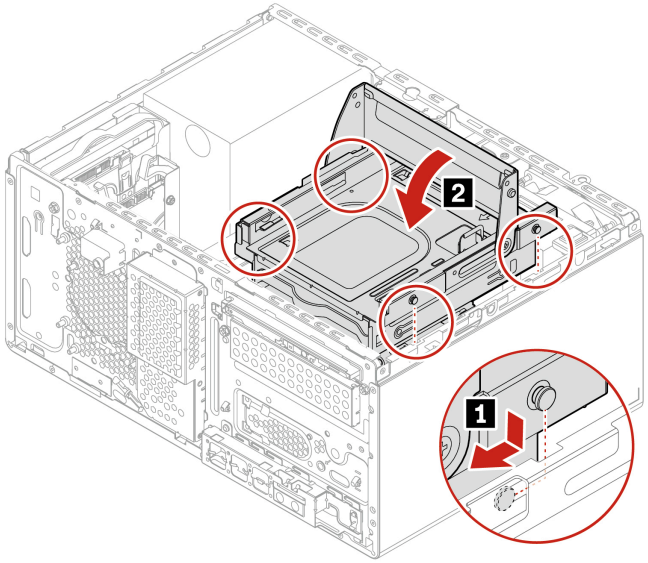

Secondary storage drives

Prerequisite

Before you start, read *Generic Safety and Compliance Notices*, and print the following instructions.

Attention: The internal storage drive is sensitive. Inappropriate handling might cause damage and permanent loss of data. When handling the internal storage drive, observe the following guidelines:

- Replace the internal storage drive only for upgrade or repair. The internal storage drive is not designed for frequent changes or replacement.
- Before replacing the internal storage drive, make a backup copy of all the data that you want to keep.
- Do not touch the contact edge of the internal storage drive. Otherwise, the internal storage drive might get damaged.

- Do not apply pressure to the internal storage drive.
- Do not make the internal storage drive subject to physical shocks or vibration. Put the internal storage drive on a soft material, such as cloth, to absorb physical shocks.

For access, remove these parts in order, if any:

- “Computer cover” on page 29
- “Slim optical drive” on page 30
- “Front bezel” on page 31
- “Slim-optical-drive cage” on page 36

Removal steps of the 2.5-inch secondary storage bracket and cage

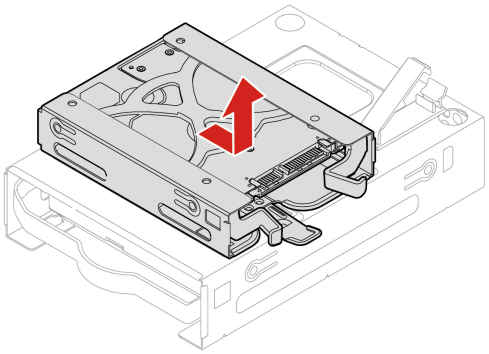

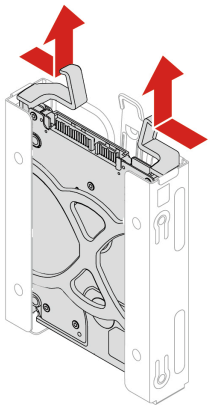

Removal steps of the 3.5-inch secondary storage drive, plastic bracket, and cage

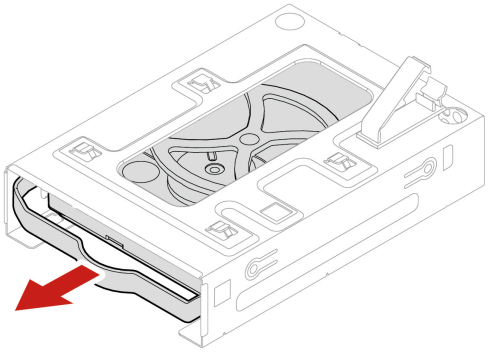

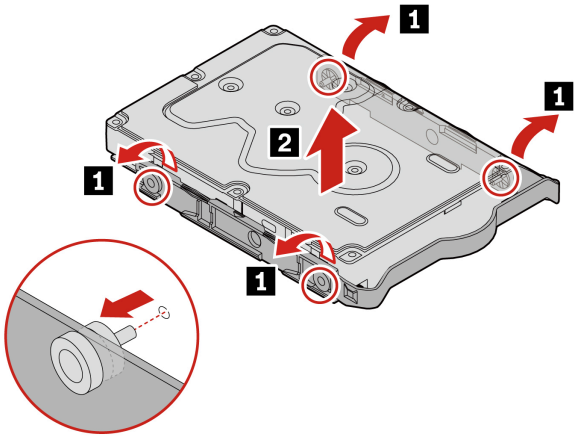

Storage drive in the front-access storage enclosure

Prerequisite

Before you start, read *Generic Safety and Compliance Notices*, and print the following instructions.

Attention: The internal storage drive is sensitive. Inappropriate handling might cause damage and permanent loss of data. When handling the internal storage drive, observe the following guidelines:

- Replace the internal storage drive only for upgrade or repair. The internal storage drive is not designed for frequent changes or replacement.
- Before replacing the internal storage drive, make a backup copy of all the data that you want to keep.
- Do not touch the contact edge of the internal storage drive. Otherwise, the internal storage drive might get damaged.
- Do not apply pressure to the internal storage drive.
- Do not make the internal storage drive subject to physical shocks or vibration. Put the internal storage drive on a soft material, such as cloth, to absorb physical shocks.

You can install or replace a storage drive in the front-access storage enclosure. The storage drive also can be hot-swappable, which means that you can install or replace the drive without even turning off your computer. Therefore, lock the enclosure cover to prevent the unexpected removal. The keys are attached at the rear of the computer. Store the keys in a secure place.

The storage drive in the front-access storage enclosure is hot-swappable only when the following requirements are met:

- The eSATA mode of the SATA 4 connector is enabled in BIOS by doing the following:
  1. Restart the computer. When the logo screen is displayed, press F1 or Fn+F1.
  2. Select **Devices → ATA Drive Setup → SATA Drive 4 Hot-Plug Support** and press Enter.
  3. Select **Enabled** and press Enter.
  4. Press F10 or Fn+F10 to save the changes and exit.
- The SATA cable of the front-access storage enclosure is connected to the SATA 4 connector on the system board.
- The operating system of your computer does not reside on the storage drive installed in the front-access storage enclosure.

Attention: If any of the above requirements are not met, do not install or replace the storage drive when the computer is turned on. Otherwise, data on the storage drive might get damaged.

Removal steps of the 3.5-inch storage drive

Note: Before removing an old 3.5-inch storage drive, safely eject the old storage drive from the operating system first. For more information, see the Windows help system.

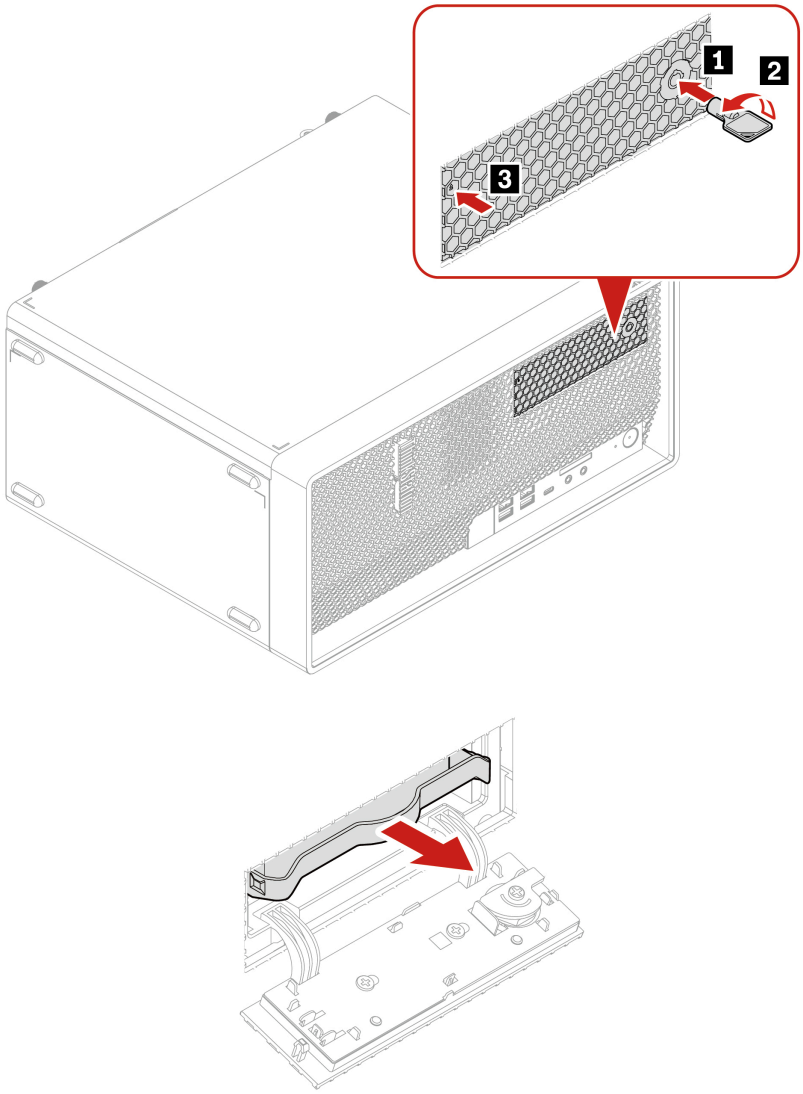

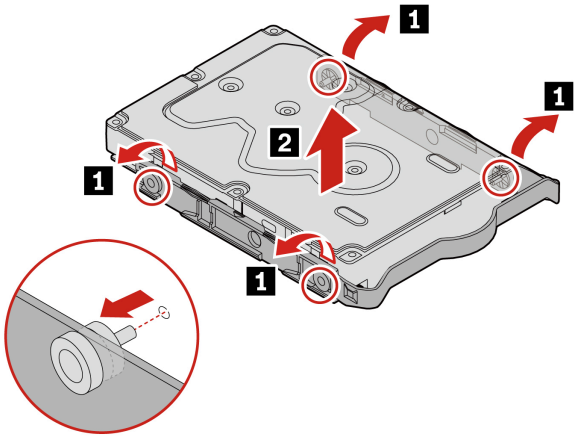

Replacement procedure of the 2.5-inch storage drive, Type-2 storage drive converter, and bracket

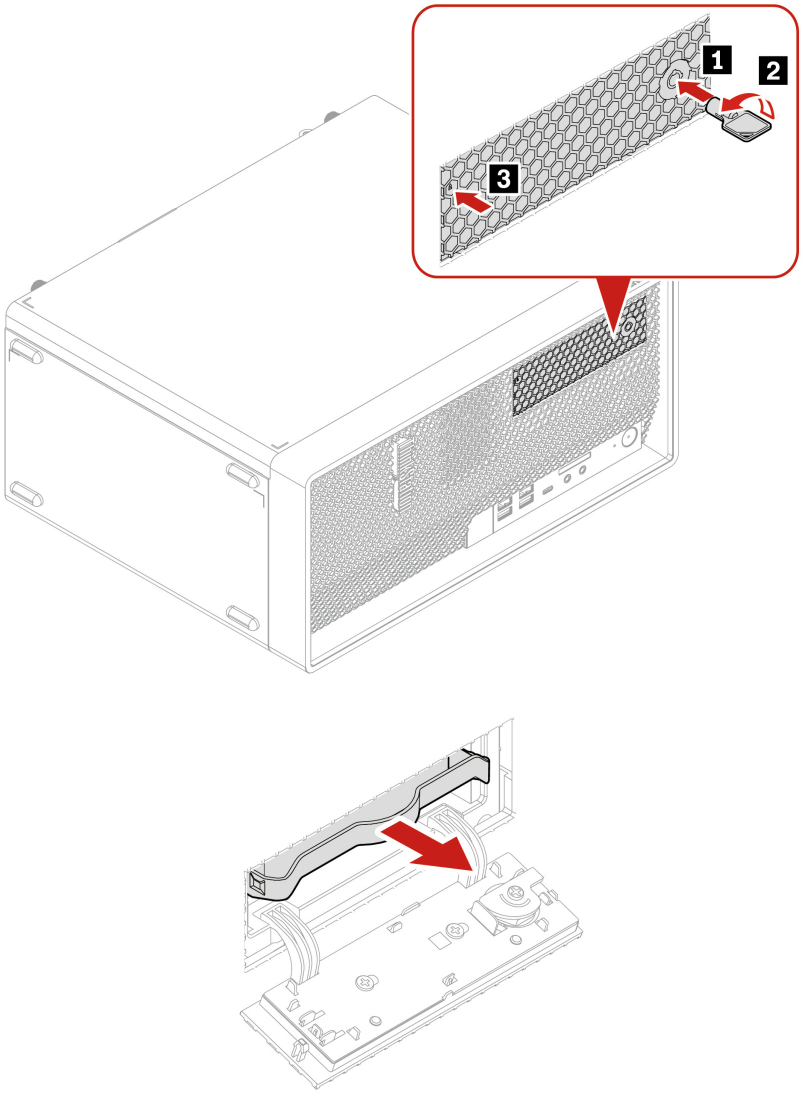

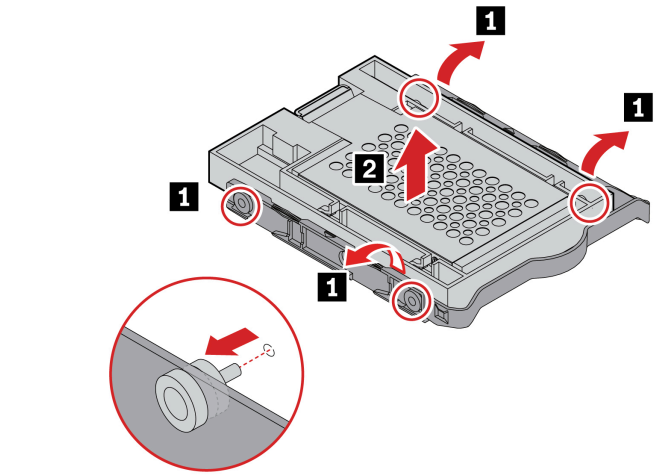
1
1
2
1
1

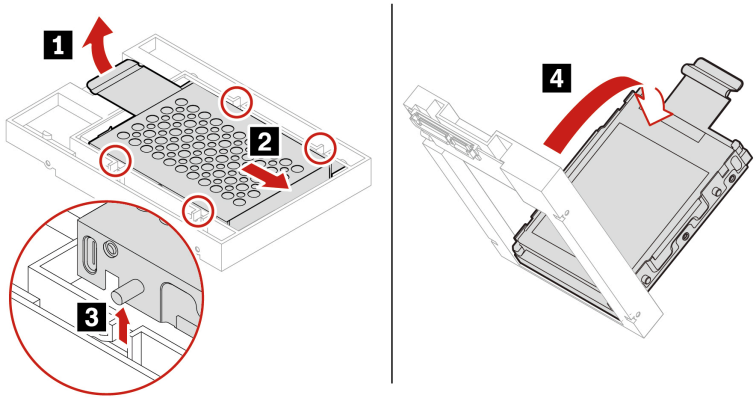
1
2
3
4

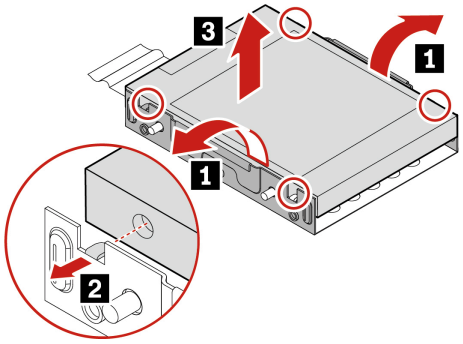
3
1
1
2

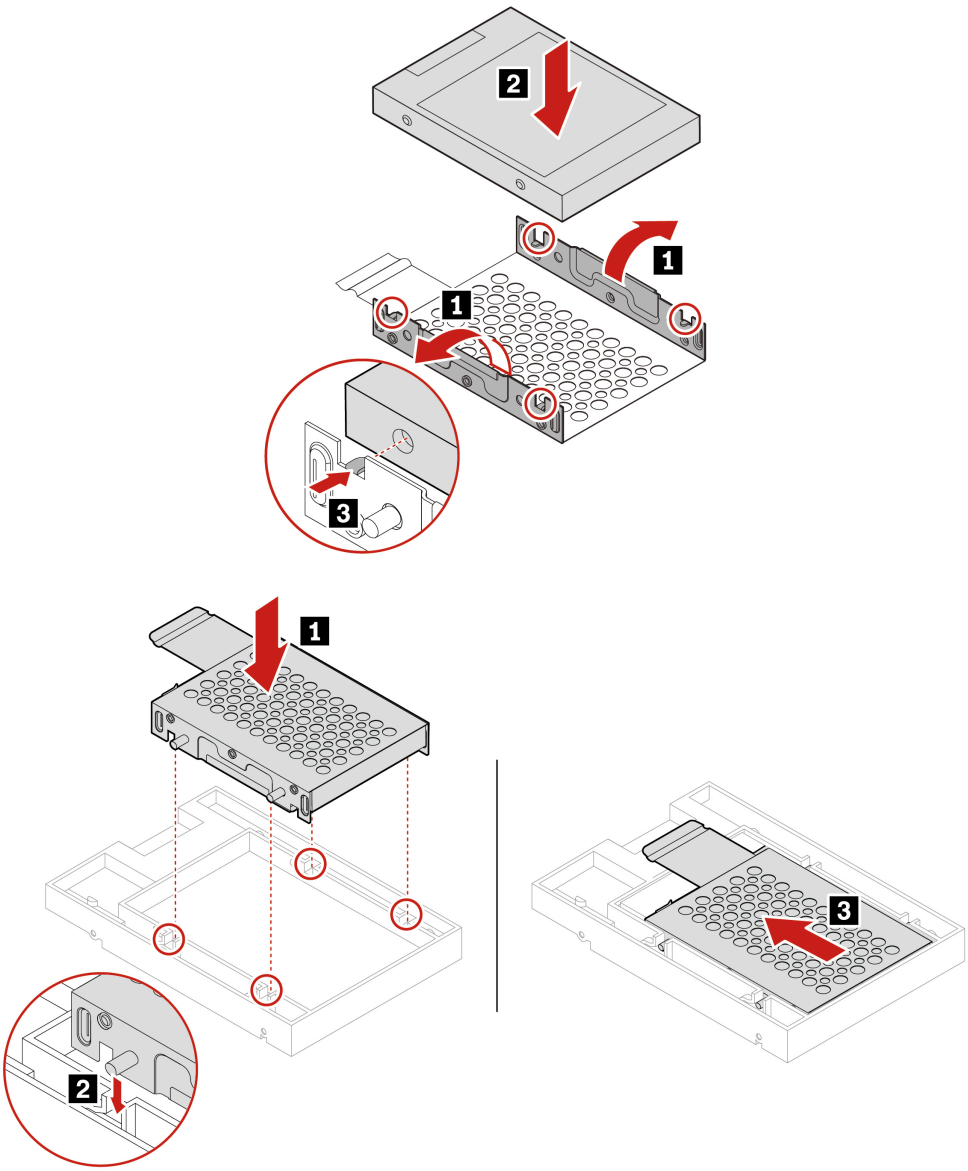
2
1
1
3
1
2
3

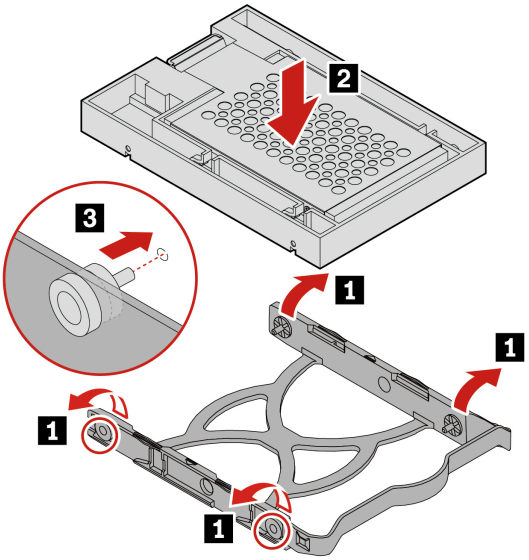

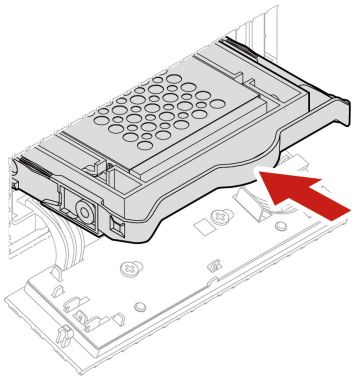

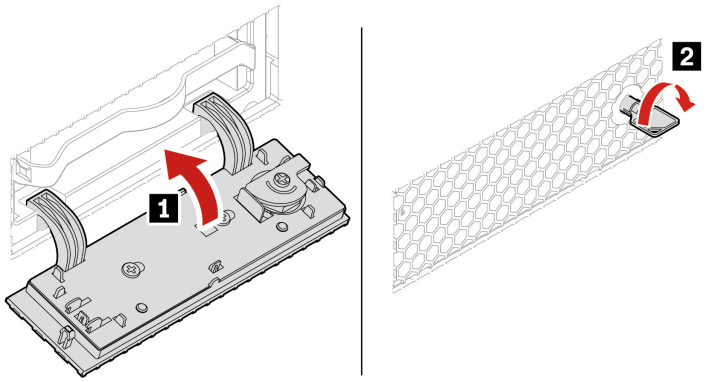

Note: Before removing an old 2.5-inch storage drive, safely eject the old storage drive from the operating system first. For more information, see the Windows help system.

PCI-Express card

Prerequisite

Before you start, read *Generic Safety and Compliance Notices*, and print the following instructions.

For access, remove the “Computer cover” on page 29.

Notes:

- Do not attempt to install any PCI-Express cards other than discrete graphics card to PCI-Express card slot 1.
- If there is only one discrete graphics card, install it to PCI-Express card slot 1.
- If there are two discrete graphics cards, install the one with higher power consumption to PCI-Express card slot 1, and install the other to PCI-Express card slot 3.

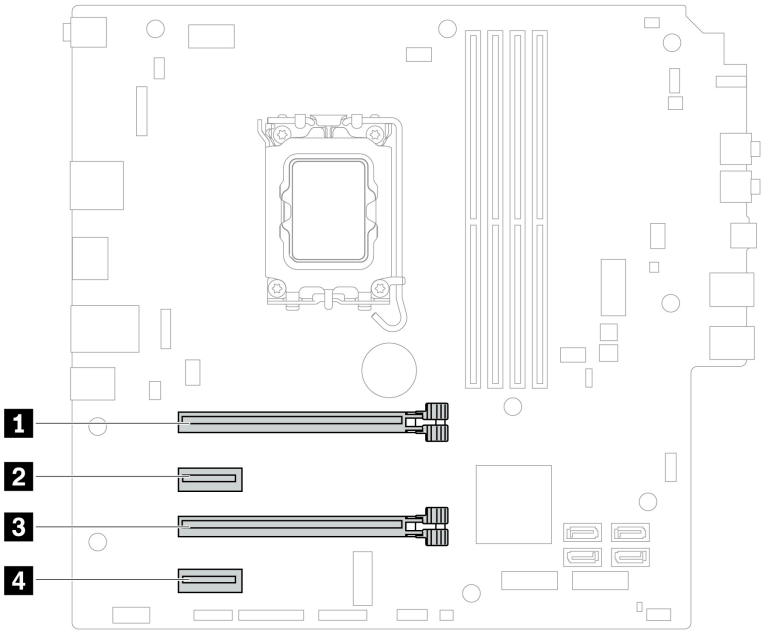

Replacement procedure

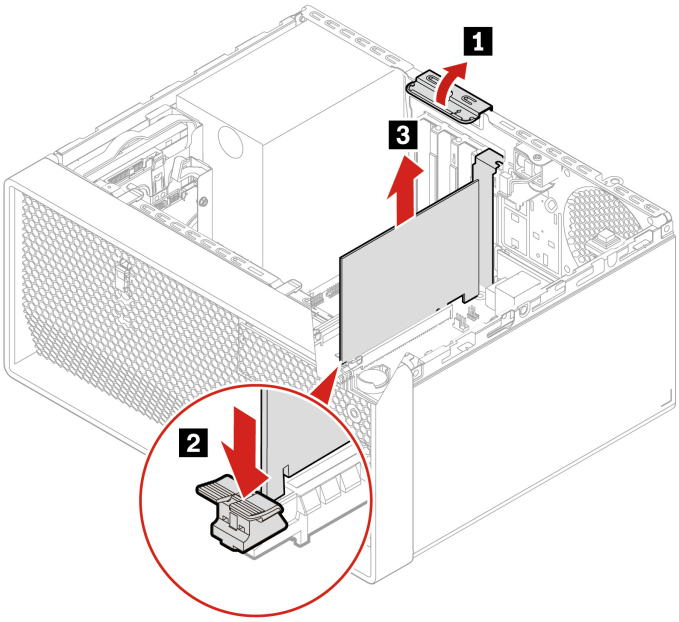

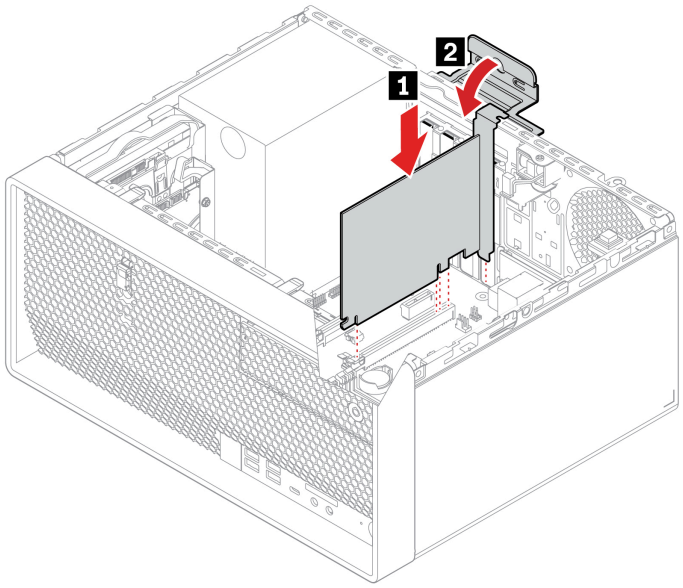

Graphics card holder

Prerequisite

Before you start, read *Generic Safety and Compliance Notices*, and print the following instructions.

For access, remove the “Computer cover” on page 29.

Replacement procedure

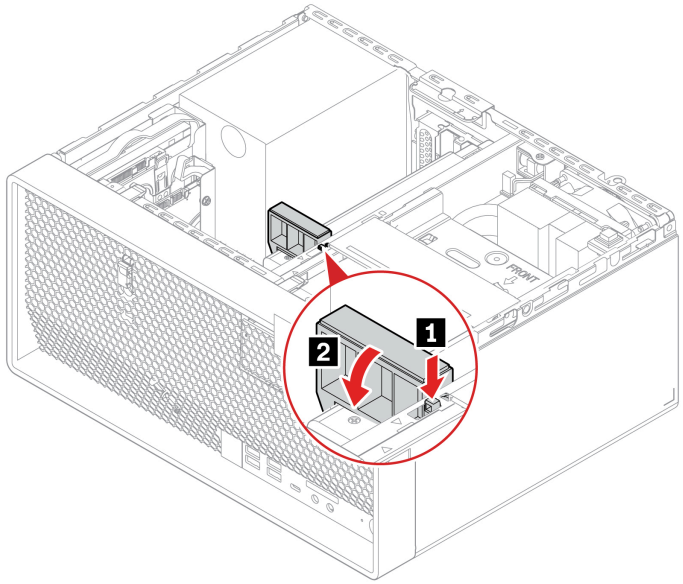

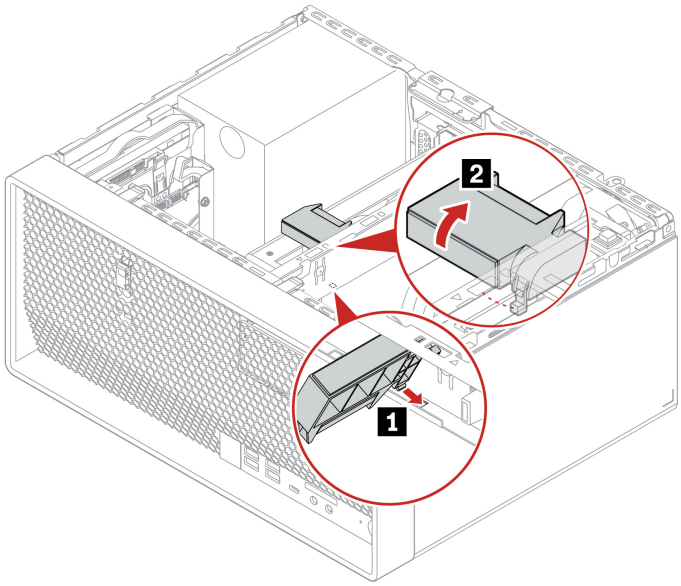

Graphics card

Prerequisite

Before you start, read *Generic Safety and Compliance Notices*, and print the following instructions.

Replacement procedure of the graphics card secured with a bracket and a plastic holder

For access, do the following:

1. Remove these parts in order, if any:
   - “Computer cover” on page 29
   - “Slim optical drive” on page 30
   - “Slim-optical-drive cage” on page 36
   - “Graphics card holder” on page 46
2. Disconnect the power cable (if any) from the graphics card.

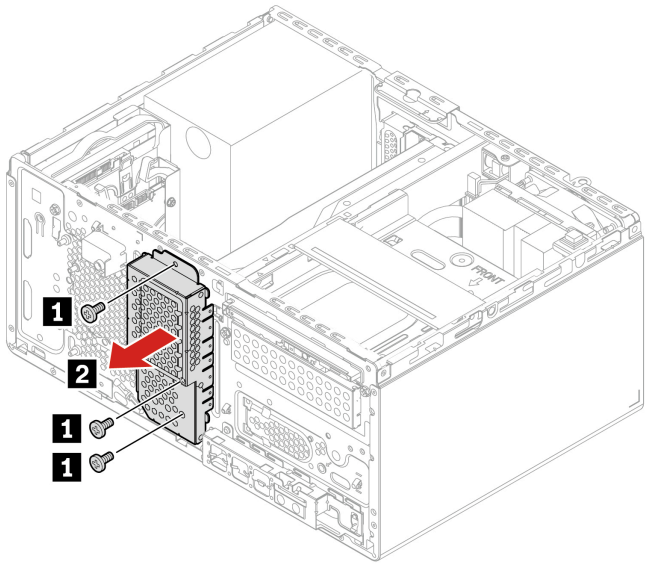
1
2
1
1
FRONT

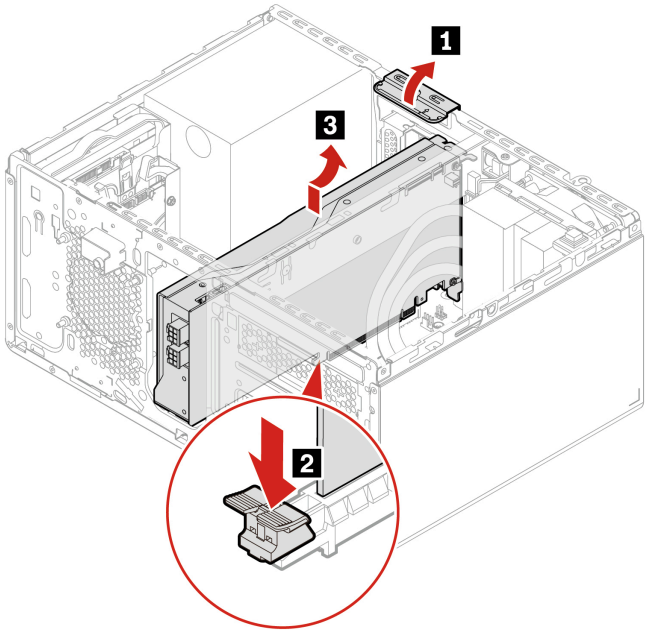
1
3
2

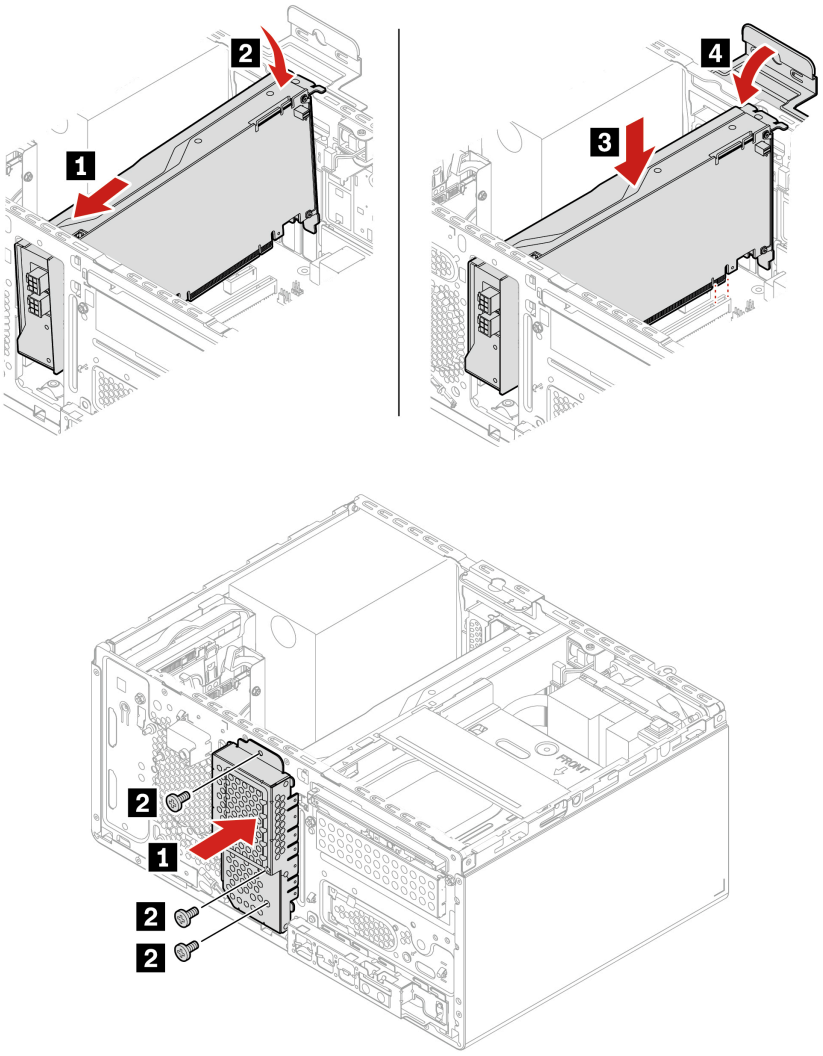

Removal steps of the graphics card secured with a plastic holder

For access, do the following:

1. Remove these parts in order, if any:
   - “Computer cover” on page 29
   - “Graphics card holder” on page 46
2. Disconnect the power cable (if any) from the graphics card.

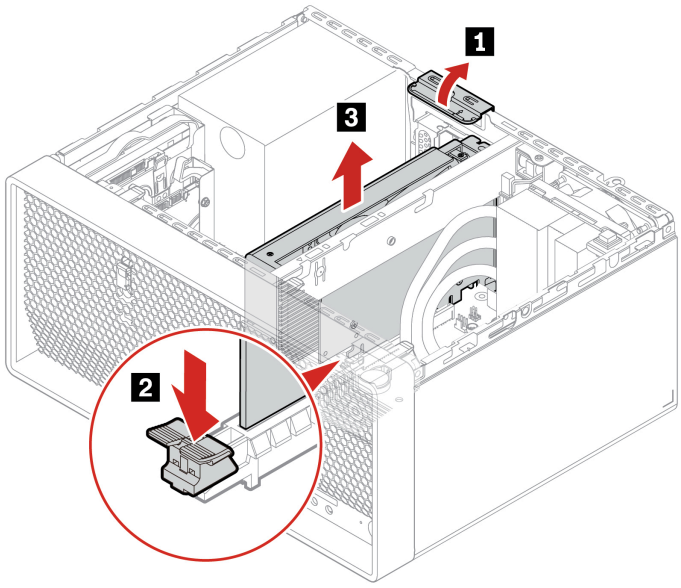

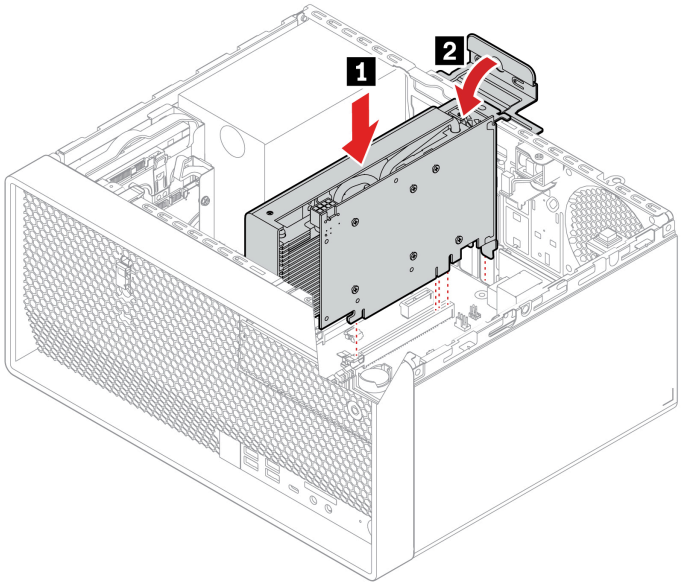

M.2 solid-state drive and heat sink

Prerequisite

Before you start, read *Generic Safety and Compliance Notices*, and print the following instructions.



Before you open the computer cover, turn off the computer and wait several minutes until the computer is cool.

Attention: The internal storage drive is sensitive. Inappropriate handling might cause damage and permanent loss of data. When handling the internal storage drive, observe the following guidelines:

- Replace the internal storage drive only for upgrade or repair. The internal storage drive is not designed for frequent changes or replacement.
- Before replacing the internal storage drive, make a backup copy of all the data that you want to keep.
- Do not touch the contact edge of the internal storage drive. Otherwise, the internal storage drive might get damaged.
- Do not apply pressure to the internal storage drive.
- Do not make the internal storage drive subject to physical shocks or vibration. Put the internal storage drive on a soft material, such as cloth, to absorb physical shocks.

Removal steps of the M.2 solid-state drive Gen 4

- Remove the “Computer cover” on page 29.
- Remove the M.2 solid-state drive and the heat sink (if any) depending on the computer model.
  - For computers without the heat sink for the M.2 solid-state drive:

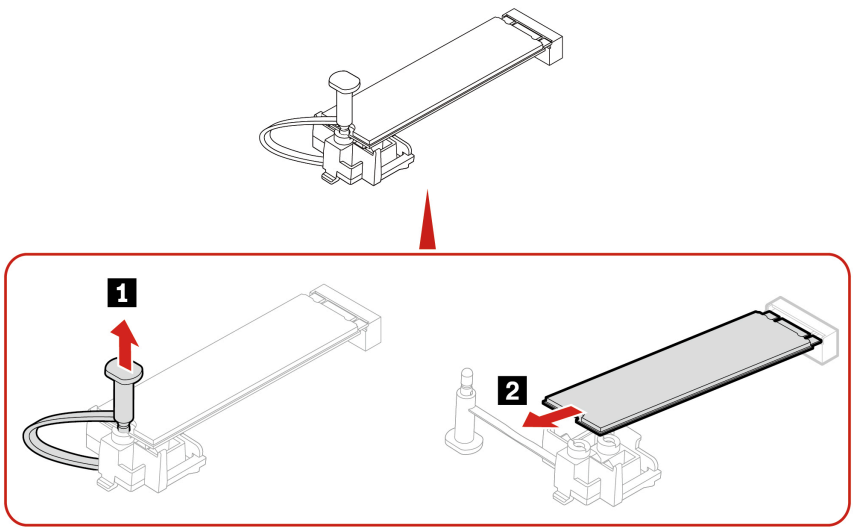

  - For computers with the heat sink for the M.2 solid-state drive, do one of the following depending on the computer model:
    - Type 1

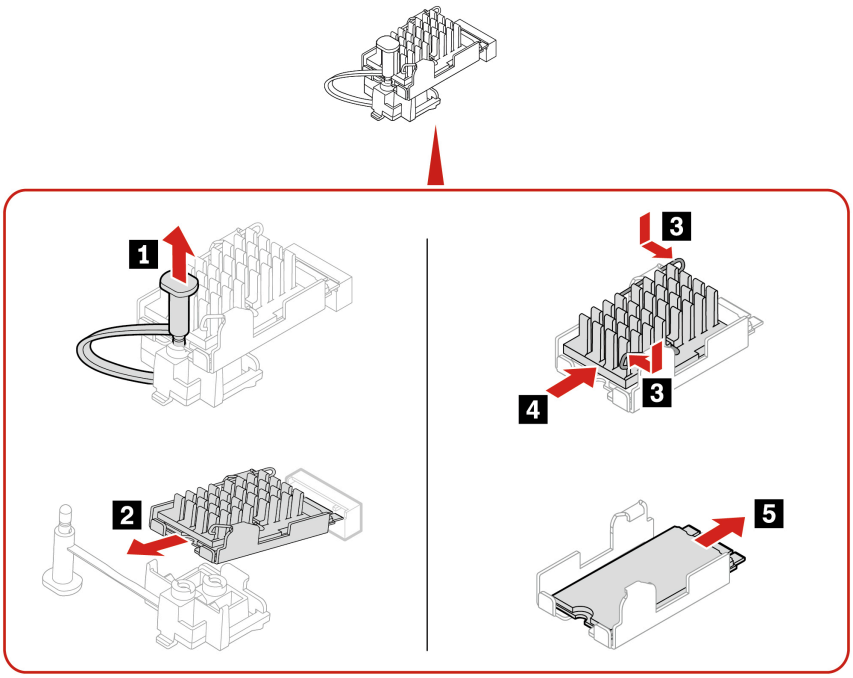

– Type 2

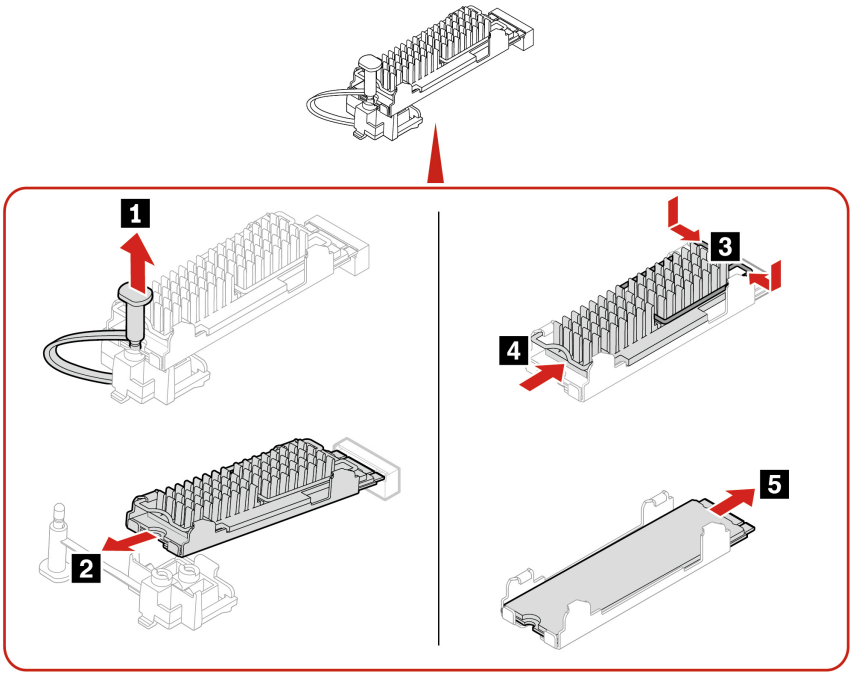

– Type 3

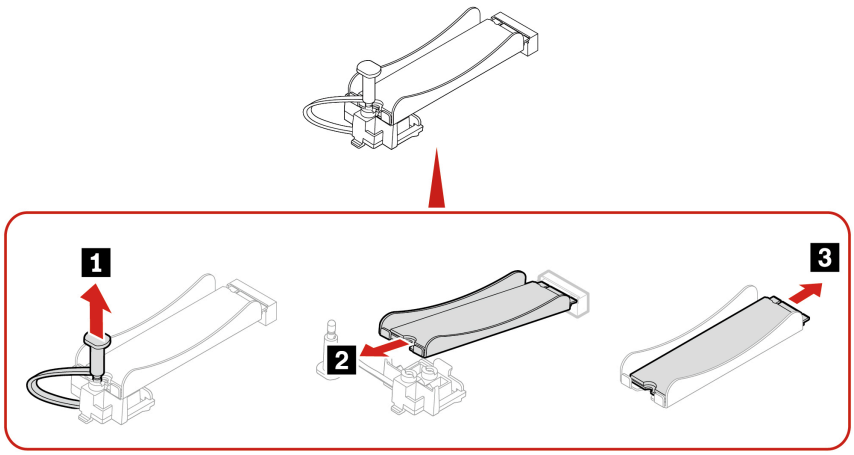

Note: Remove the film that covers the thermal pad (if any) when installing the M.2 solid-state drive and the heat sink.

Replacement procedure of the M.2 solid-state drive in an M.2 solid-state drive PCIe adapter

1. Remove the “Computer cover” on page 29.
2. Locate and remove the M.2 solid-state drive PCIe adapter from the PCIe card slot. See “PCI-Express card” on page 44.
3. Replace the M.2 solid-state drive and the heat sink.

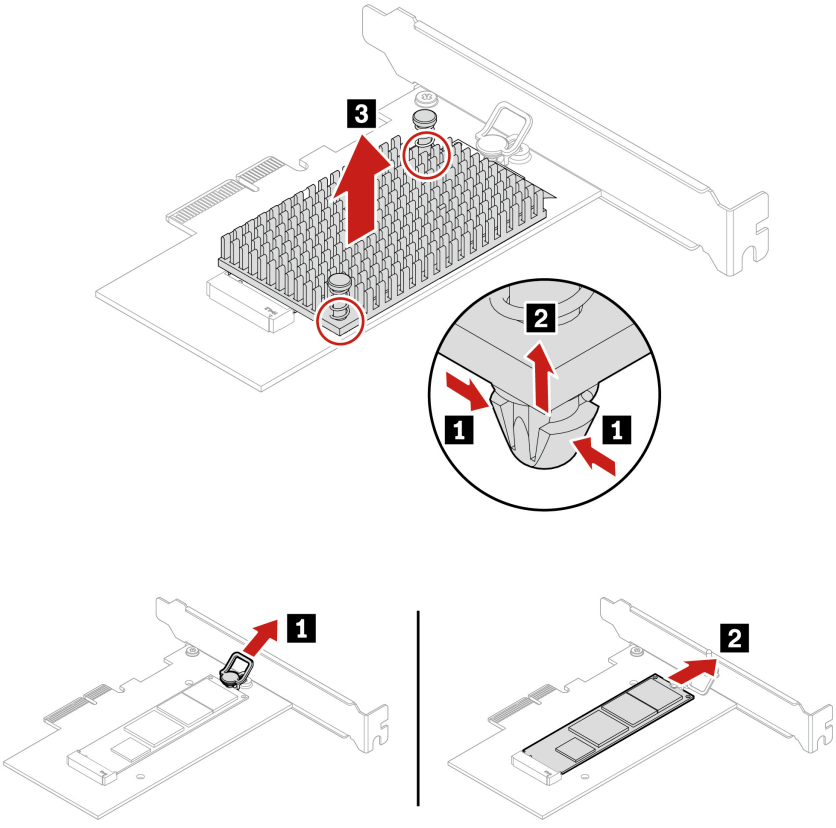

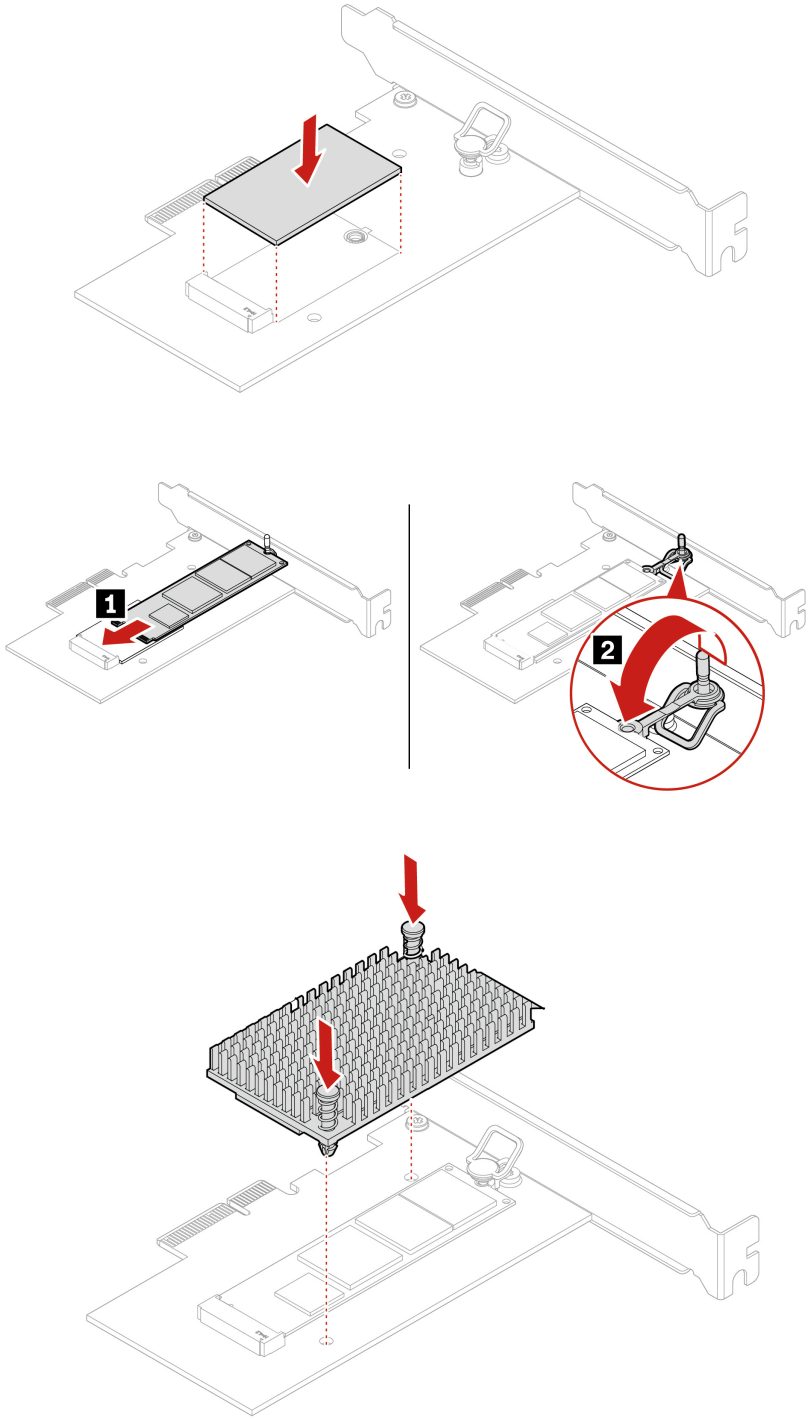

M.2 solid-state drive bracket

Prerequisite

Before you start, read *Generic Safety and Compliance Notices*, and print the following instructions.

For access, remove these parts in order, if any:

- “Computer cover” on page 29
- “M.2 solid-state drive and heat sink” on page 50

Replacement procedure

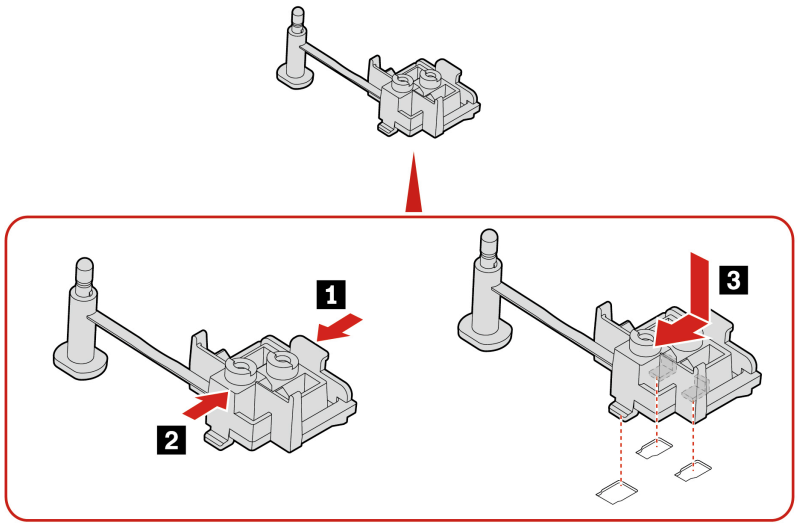

Front fan

Prerequisite

Before you start, read *Generic Safety and Compliance Notices*, and print the following instructions.

For access, do the following:

1. Remove these parts in order, if any:
   - “Computer cover” on page 29
   - “Front bezel” on page 31
2. Disconnect the front fan cable from the front fan connector on the system board.

Note: The front fan is attached to the chassis by four rubber mounts. Stretch the tips of the rubber mounts and gently pull the front fan assembly out of the chassis.

Replacement procedure

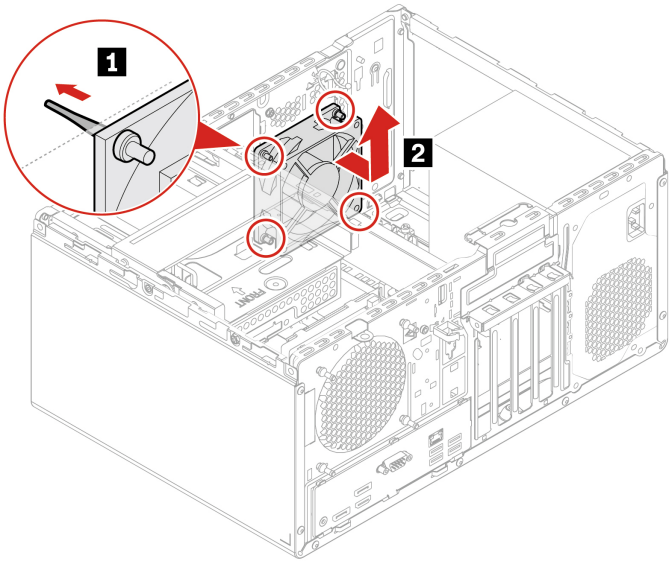

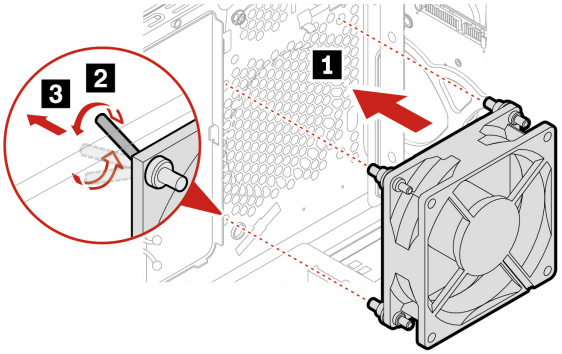

Note: Align the rubber mounts with the corresponding holes in the chassis and push the rubber mounts through the holes. Rotate and pull the tips of the rubber mounts until the front fan assembly is secured.

Rear fan

Prerequisite

Before you start, read *Generic Safety and Compliance Notices*, and print the following instructions.

For access, do the following:

1. Remove the “Computer cover” on page 29.
2. Disconnect the rear fan cable from the rear fan connector on the system board.

Replacement procedure

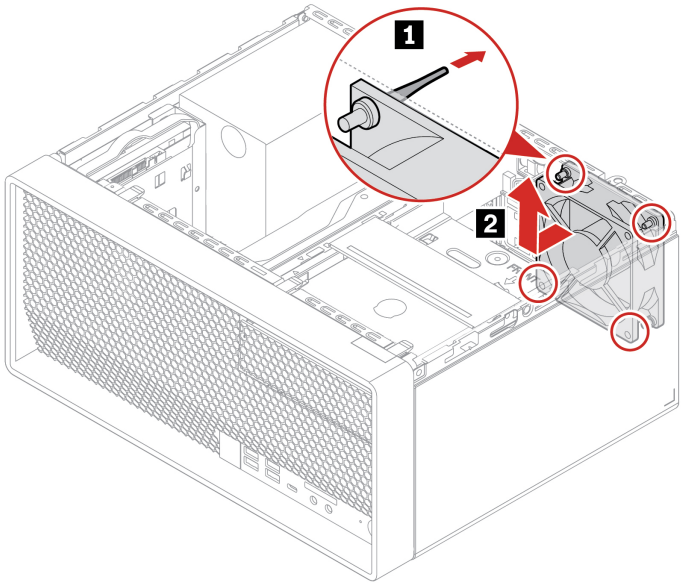

Note: The rear fan is attached to the chassis by four rubber mounts. Stretch the tips of the rubber mounts and gently pull the rear fan assembly out of the chassis.

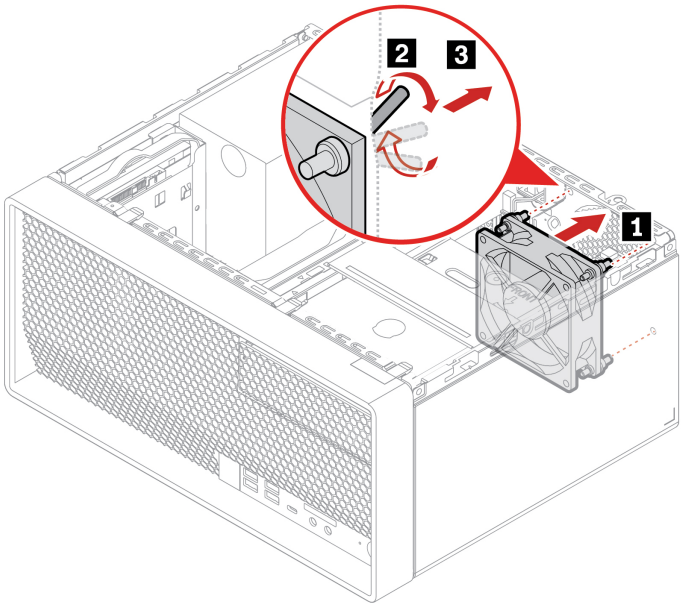

Note: Align the rubber mounts with the corresponding holes in the chassis and push the rubber mounts through the holes. Rotate and pull the tips of the rubber mounts until the rear fan assembly is secured.

Heat-sink-and-fan assembly

Prerequisite

Before you start, read *Generic Safety and Compliance Notices*, and print the following instructions.

The heat sink might be very hot. Before you open the computer cover, turn off the computer and wait several minutes until the computer is cool.

For access, do the following:

1. Remove these parts in order, if any:
   - “Computer cover” on page 29
   - “Slim optical drive” on page 30
   - “Front bezel” on page 31
   - “Slim-optical-drive cage” on page 36
2. Disconnect the heat-sink-and-fan assembly cable from the microprocessor fan connector on the system board.

Replacement procedure of the 65-watt heat-sink-and-fan assembly

1. Follow the following sequence to loosen the four screws that secure the heat-sink-and-fan assembly to the system board. Then, lift the heat-sink-and-fan assembly off the system board.
   - Partially loosen screw 1a, fully loosen screw 1b, and then fully loosen screw 1a.
   - Partially loosen screw 1c, fully loosen screw 1d, and then fully loosen screw 1c.

   Notes:
   - Carefully loosen the four screws to avoid any possible damage to the system board. The four screws cannot be removed from the heat-sink-and-fan assembly.
   - You might have to gently twist the heat-sink-and-fan assembly to free it from the microprocessor.
   - Do not touch the thermal grease while handling the heat-sink-and-fan assembly.

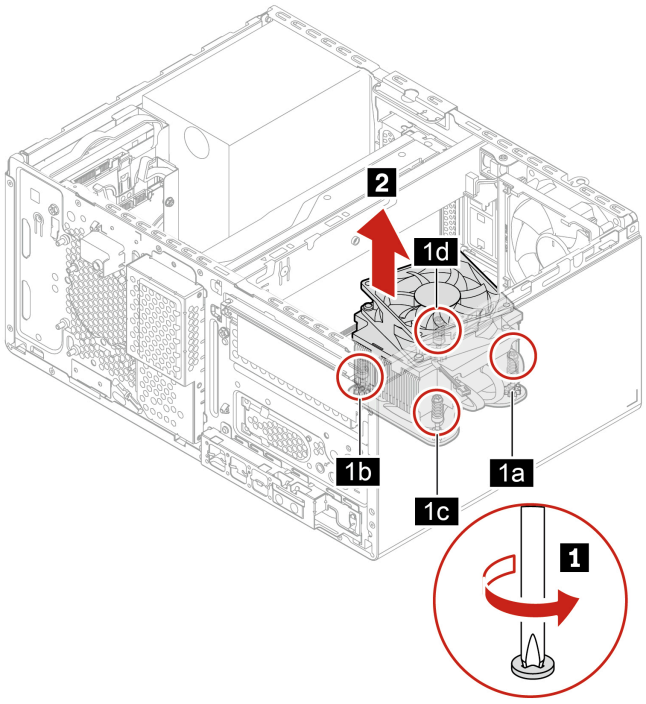

Position the heat-sink-and-fan assembly on the system board. Ensure that the four screws are aligned with the holes in the system board. Follow the following sequence to tighten the four screws to secure the new heat-sink-and-fan assembly. Do not over-tighten the screws.

- Partially tighten screw 2a, fully tighten screw 2b, and then fully tighten screw 2a.
- Partially tighten screw 2c, fully tighten screw 2d, and then fully tighten screw 2c.

Notes:

- Apply appropriate amount of thermal grease to the new heat-sink-and-fan assembly.
- Ensure that the heat-sink-and-fan assembly cable is toward the microprocessor fan connector on the system board.

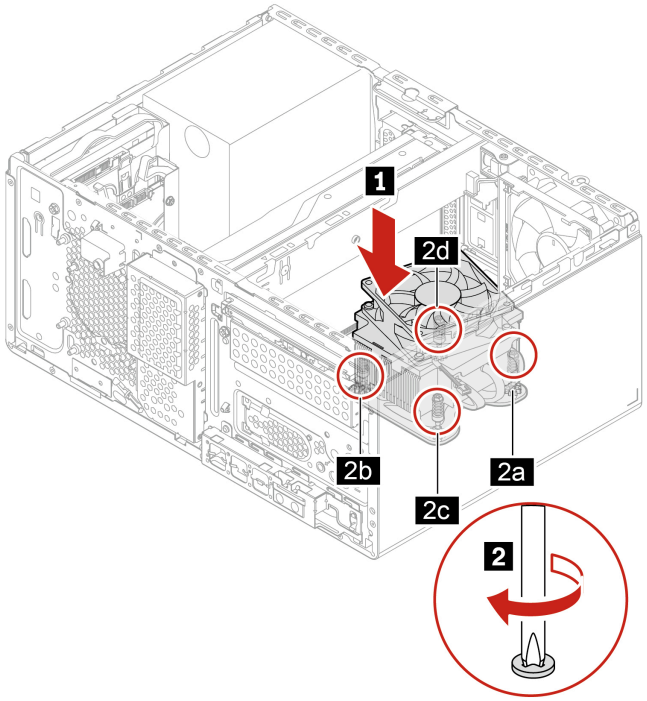

Replacement procedure of the 125-watt heat-sink-and-fan assembly

1. Remove the four screws that secure the heat-sink-and-fan assembly to the chassis. Then, follow the following sequence to loosen the four screws that secure the heat-sink-and-fan assembly to the system board. Then, lift the heat-sink-and-fan assembly off the system board.
   - Partially loosen screw 2a, fully loosen screw 2b, and then fully loosen screw 2a.
   - Partially loosen screw 2c, fully loosen screw 2d, and then fully loosen screw 2c.

   Notes:

   - Carefully loosen the four screws to avoid any possible damage to the system board. The four screws cannot be removed from the heat-sink-and-fan assembly.
   - You might have to gently twist the heat-sink-and-fan assembly to free it from the microprocessor.
   - Do not touch the thermal grease while handling the heat-sink-and-fan assembly.
   - In case you need to remove the chassis beam as well, ensure that the 125-watt heat-sink-and-fan assembly has been removed before you remove the chassis beam.

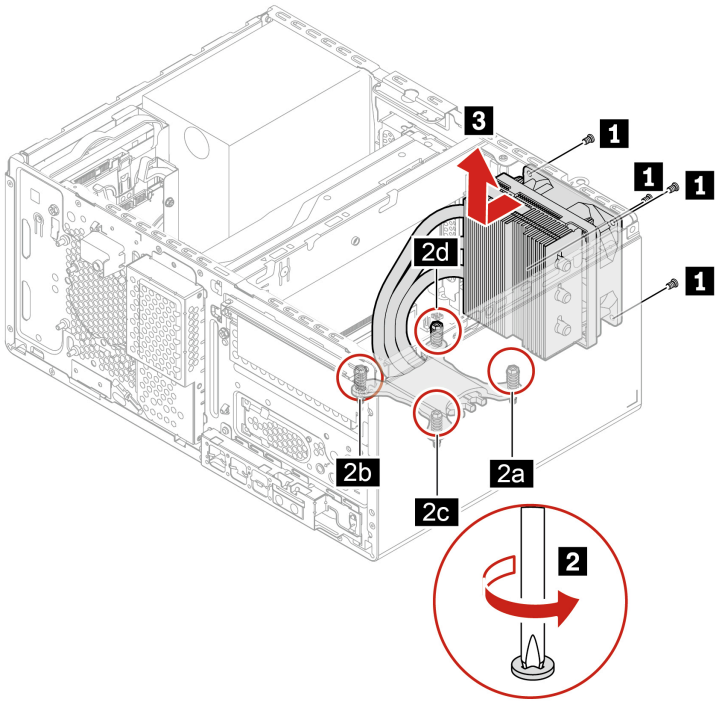

2. Position the new heat-sink-and-fan assembly on the system board. Ensure that the four screws are aligned with the holes in the system board. Follow the following sequence to tighten the four screws to secure the new heat-sink-and-fan assembly to the system board. Do not over-tighten the screws. Then, install the four screws to secure the new heat-sink-and-fan assembly to the chassis.
   - Partially tighten screw 2a, fully tighten screw 2b, and then fully tighten screw 2a.
   - Partially tighten screw 2c, fully tighten screw 2d, and then fully tighten screw 2c.

   Notes:
   - Apply appropriate amount of thermal grease to the new heat-sink-and-fan assembly.
   - In case you need to install the chassis beam as well, ensure that it has been installed in place before you install the 125-watt heat-sink-and-fan assembly.

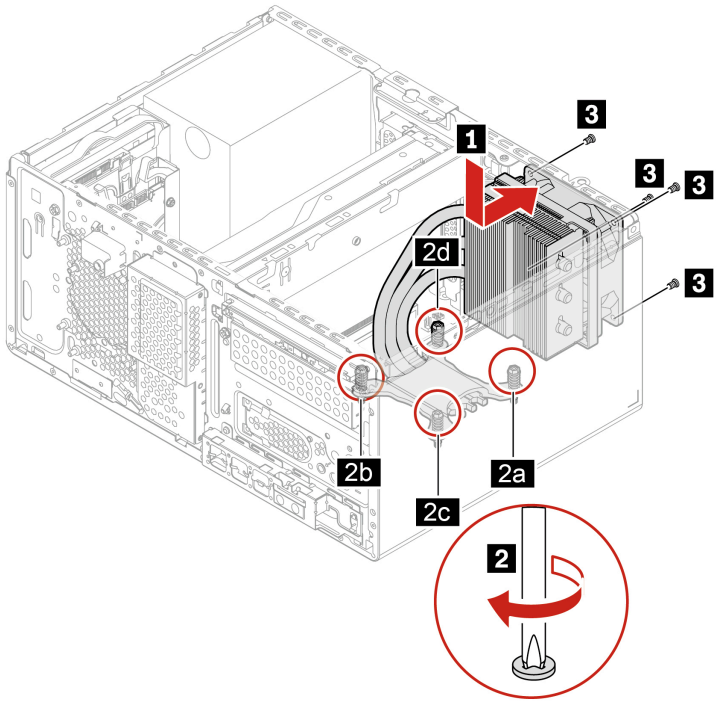

Chassis beam

Prerequisite

Before you start, read *Generic Safety and Compliance Notices*, and print the following instructions.

For access, remove these parts in order, if any:

- “Computer cover” on page 29
- “Slim optical drive” on page 30
- “Front bezel” on page 31
- “Slim-optical-drive cage” on page 36
- “Graphics card holder” on page 46
- “Graphics card” on page 47
- “125-watt heat-sink-and-fan assembly” on page 59

Replacement procedure

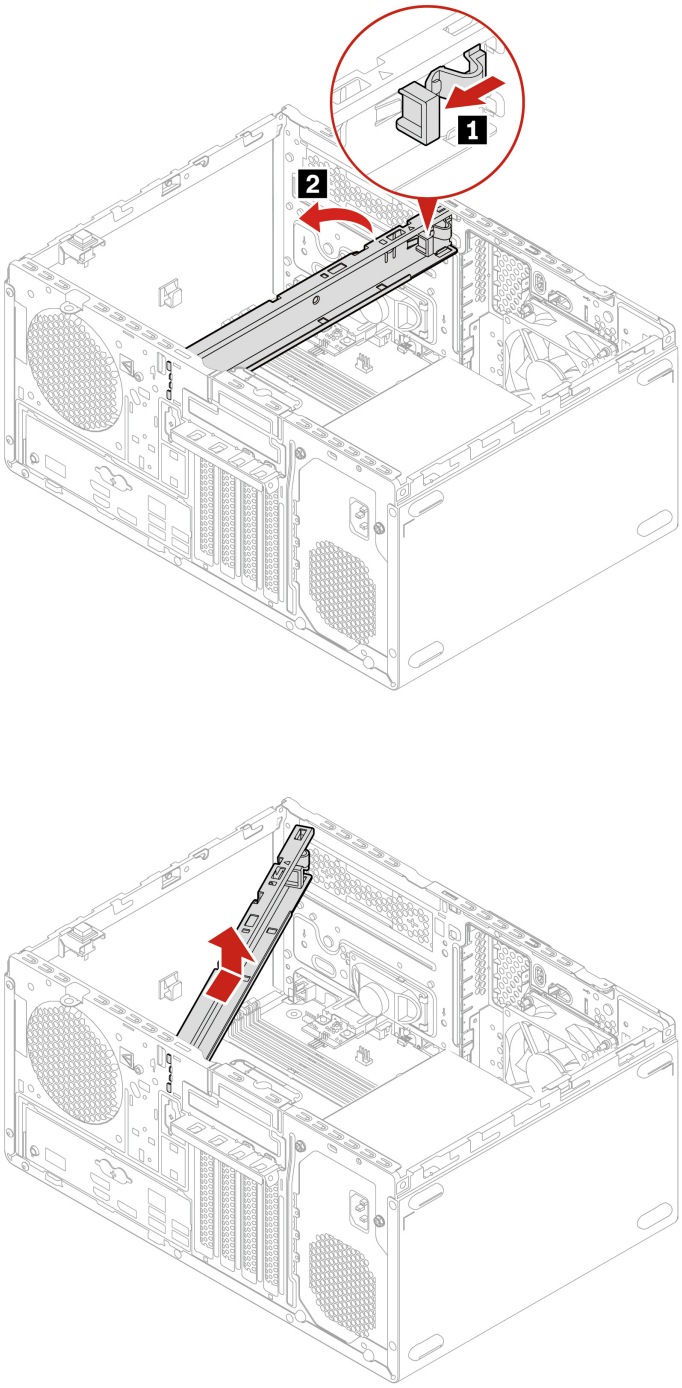

Memory module

Prerequisite

Before you start, read *Generic Safety and Compliance Notices*, and print the following instructions.

Ensure that you follow the installation order for memory modules shown in the following illustration.

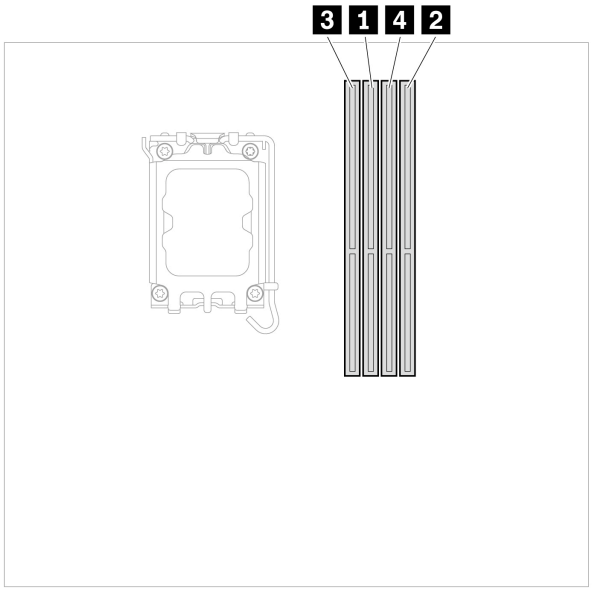

For access, remove these parts in order, if any:

- “Computer cover” on page 29
- “Slim optical drive” on page 30
- “Front bezel” on page 31
- “Slim-optical-drive cage” on page 36

Replacement procedure

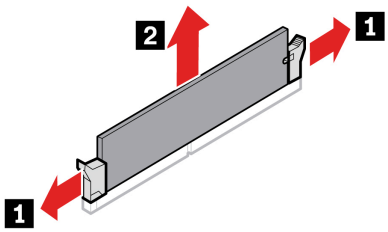

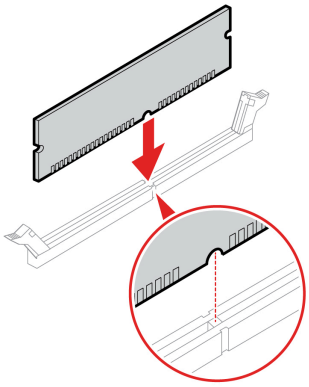

Note: During the installation, ensure that you align the memory module to the slot and press down on both ends until the latches are fully engaged with a click.

Power supply assembly

Prerequisite

Before you start, read *Generic Safety and Compliance Notices*, and print the following instructions.

Although there are no moving parts in the computer after the power cord has been disconnected, the following warnings are required for your safety.



Keep fingers and other parts of your body away from hazardous, moving parts. If you suffer an injury, seek medical care immediately. Never remove the cover on a power supply or any part that has the following label attached.



Hazardous voltage, current, and energy levels are present inside any component that has this label attached. There are no serviceable parts inside these components. If you suspect a problem with one of these parts, contact a service technician.

For access, do the following:

1. Remove these parts in order, if any:
   - “Computer cover” on page 29
   - “Slim optical drive” on page 30
   - “Front bezel” on page 31
   - “Primary storage drive” on page 32
   - “3.5-inch primary storage drive cage” on page 35
2. Disconnect the power supply assembly cables from the system board.

Removal steps

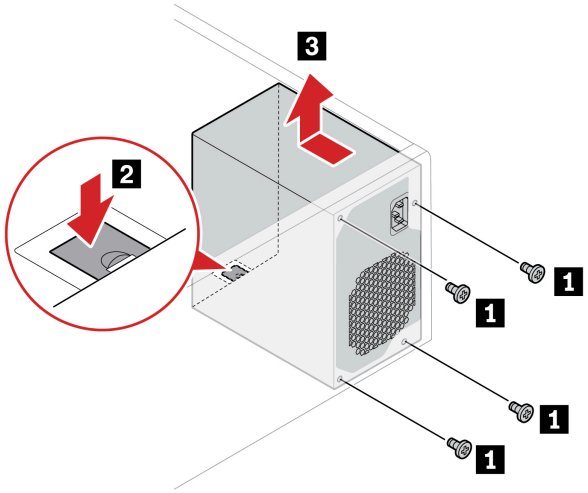

E-lock

Prerequisite

Before you start, read *Generic Safety and Compliance Notices*, and print the following instructions.

For access, do the following:

1. Remove the “Computer cover” on page 29.
2. Disconnect the E-lock cable from the system board.

Note: To remove the screws, you need a special tool (T15 star wrench).

Removal steps

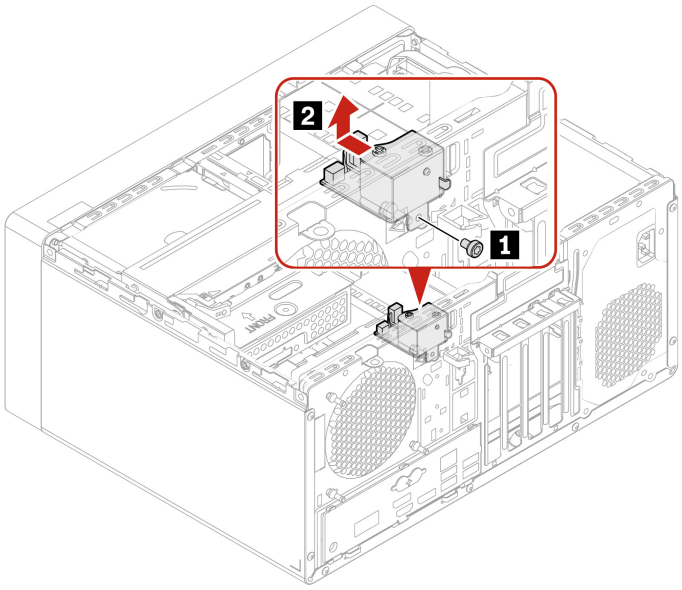

Chapter 9. Help and support

Self-help resources

Use the following self-help resources to learn more about the computer and troubleshoot problems.

Resources	How to access?
Troubleshooting and frequently asked questions	• https://www.lenovo.com/tips • https://forums.lenovo.com
Accessibility information	https://www.lenovo.com/accessibility
Reset or restore Windows	• Use Lenovo recovery options. 1. Go to https://support.lenovo.com/HowToCreateLenovoRecovery. 2. Follow the on-screen instructions. • Use Windows recovery options. 1. Go to https://pcsupport.lenovo.com. 2. Detect your computer or manually select your computer model. 3. Navigate to the troubleshooting menu to diagnose the operating system for recovery instructions.
Use the Vantage app to: • Configure device settings. • Download and install UEFI BIOS, drivers and firmware updates. • Secure you computer from outside threats. • Diagnose hardware problems. • Check the computer warranty status. • Access *User Guide* and helpful articles. **Note:** The available features vary depending on the computer model.	Type `Vantage` in the Windows search box.
Product documentation: • *Safety and Warranty Guide* • *Generic Safety and Compliance Notices* • *Setup Guide* • This *User Guide* • *Regulatory Notice*	Go to https://support.lenovo.com/documentation. Then, follow the on-screen instructions to filter out the documentation you want.

© Copyright Lenovo 2024, 2025

Resources	How to access?
Lenovo Support Web site with the latest support information of the following: • Drivers and software • Diagnostic solutions • Product and service warranty • Product and parts details • Knowledge base and frequently asked questions	https://pcsupport.lenovo.com
Windows help information	• Type `Get Help` or `Tips` in the Windows search box. • Use Windows Search or the Cortana® personal assistant. • Microsoft support Web site: https://support.microsoft.com

Call Lenovo

If you have tried to correct the problem yourself and still need help, you can call Lenovo Customer Support Center.

Before you contact Lenovo

Prepare the following before you contact Lenovo:

1. Record the problem symptoms and details:
   - What is the problem? Is it continuous or intermittent?
   - Any error message or error code?
   - What operating system are you using? Which version?
   - Which software applications were running at the time of the problem?
   - Can the problem be reproduced? If so, how?
2. Record the system information:
   - Product name
   - Machine type and serial number

The following illustration shows where to find the machine type and serial number of your computer.

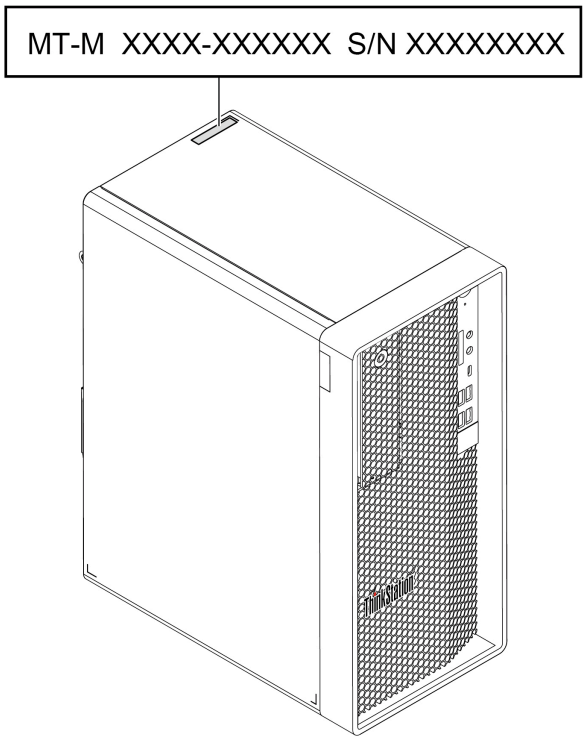

Lenovo Customer Support Center

During the warranty period, you can call Lenovo Customer Support Center for help.

Telephone numbers

For a list of the Lenovo Support phone numbers for your country or region, go to:
https://pcsupport.lenovo.com/supportphonelist

Note: Phone numbers are subject to change without notice. If the number for your country or region is not provided, contact your Lenovo reseller or Lenovo marketing representative.

Services available during the warranty period

- Problem determination - Trained personnel are available to assist you with determining if you have a hardware problem and deciding what action is necessary to fix the problem.
- Lenovo hardware repair - If the problem is determined to be caused by Lenovo hardware under warranty, trained service personnel are available to provide the applicable level of service.
- Engineering change management - Occasionally, there might be changes that are required after a product has been sold. Lenovo or your reseller, if authorized by Lenovo, will make selected Engineering Changes (ECs) that apply to your hardware available.

Services not covered

- Replacement or use of parts not manufactured for or by Lenovo or nonwarranted parts
- Identification of software problem sources
- Configuration of UEFI BIOS as part of an installation or upgrade
- Changes, modifications, or upgrades to device drivers
- Installation and maintenance of network operating systems (NOS)

- Installation and maintenance of programs

For the terms and conditions of the Lenovo Limited Warranty that apply to your Lenovo hardware product, see *Safety and Warranty Guide* that comes with your computer.

Purchase additional services

During and after the warranty period, you can purchase additional services from Lenovo at: https://pcsupport.lenovo.com/warrantyupgrade

Service availability and service name might vary by country or region.

Accessibility features

Lenovo is committed to making information technology accessible to everyone, including individuals with hearing, vision, mobility, cognitive, or speech disabilities. To get the most up-to-date and detailed accessibility features information for the product, go to https://support.lenovo.com/docs/product_accessibility_features.

Appendix A. System memory speed

The Intel Xeon® or Intel Core™ microprocessor families compatible with this ThinkStation computer feature an integrated memory controller. The memory controller provides the microprocessor with direct access to the system memory. Therefore, the system memory speed will be determined by the memory module type, frequency, size (capacity), the number of memory modules installed, and the microprocessor model.

Notes:

- The actual system memory speed of the memory modules varies depending on the microprocessor model or memory type/configuration. For example, if your computer comes with three or four dual Rank 4400 MT/s memory modules, then the system memory speed may be no faster than 3600 MT/s.
- Processor DDR5 2DPC is supported when channel is populated with the same DIMM part number. Symmetric configurations are required for 2DPC within one channel. Vendor mixing within a channel is not allowed.
- The microprocessor models supported in your computer might vary. For a list of supported microprocessor models, contact the Lenovo Customer Support Center.

Refer to the following information about the system memory speed:

- **Memory module types:**
  - DDR5 ECC UDIMMs
  - DDR5 non-ECC UDIMMs
- **Memory module operating voltage**: 5 V
- **Memory module frequency**: 4400 MT/s

© Copyright Lenovo 2024, 2025

Appendix B. Compliance information

For more compliance information, refer to *Regulatory Notice* at https://support.lenovo.com/docs/common_commercial_rn and *Generic Safety and Compliance Notices* at https://pcsupport.lenovo.com/docs/generic_notices.

Certification-related information

Product name: ThinkStation P2 Tower

Machine types: 30FR and 30FS

Further compliance information related to your product is available at https://www.lenovo.com/compliance.

Operating environment

Maximum altitude (without pressurization)

- Operating: From 0 m (0 ft) to 3048 m (10 000 ft)
- Storage: From 0 m (0 ft) to 12192 m (40 000 ft)

Temperature

- Operating: From 10°C (50°F) to 35°C (95°F)
- Storage: From -40°C (-40°F) to 60°C (140°F)

Relative humidity

- Operating: 20%-80% (non-condensing)
- Storage: 10%–90% (non-condensing)

© Copyright Lenovo 2024, 2025

Appendix C. Notices and trademarks

Notices

Lenovo may not offer the products, services, or features discussed in this document in all countries. Consult your local Lenovo representative for information on the products and services currently available in your area. Any reference to a Lenovo product, program, or service is not intended to state or imply that only that Lenovo product, program, or service may be used. Any functionally equivalent product, program, or service that does not infringe any Lenovo intellectual property right may be used instead. However, it is the user's responsibility to evaluate and verify the operation of any other product, program, or service.

Lenovo may have patents or pending patent programs covering subject matter described in this document. The furnishing of this document does not give you any license to these patents. You can send license inquiries, in writing, to:

Lenovo (United States), Inc.
8001 Development Drive
Morrisville, NC 27560
U.S.A.
Attention: Lenovo Director of Licensing

LENOVO PROVIDES THIS PUBLICATION "AS IS" WITHOUT WARRANTY OF ANY KIND, EITHER EXPRESS OR IMPLIED, INCLUDING, BUT NOT LIMITED TO, THE IMPLIED WARRANTIES OF NON-INFRINGEMENT, MERCHANTABILITY OR FITNESS FOR A PARTICULAR PURPOSE. Some jurisdictions do not allow disclaimer of express or implied warranties in certain transactions, therefore, this statement may not apply to you.

Changes are made periodically to the information herein; these changes will be incorporated in new editions of the publication. To provide better service, Lenovo reserves the right to improve and/or modify the products and software programs described in the manuals included with your computer, and the content of the manual, at any time without additional notice.

The software interface and function and hardware configuration described in the manuals included with your computer might not match exactly the actual configuration of the computer that you purchase. For the configuration of the product, refer to the related contract (if any) or product packing list, or consult the distributor for the product sales. Lenovo may use or distribute any of the information you supply in any way it believes appropriate without incurring any obligation to you.

The products described in this document are not intended for use in implantation or other life support applications where malfunction may result in injury or death to persons. The information contained in this document does not affect or change Lenovo product specifications or warranties. Nothing in this document shall operate as an express or implied license or indemnity under the intellectual property rights of Lenovo or third parties. All information contained in this document was obtained in specific environments and is presented as an illustration. The result obtained in other operating environments may vary.

Lenovo may use or distribute any of the information you supply in any way it believes appropriate without incurring any obligation to you.

Any references in this publication to non-Lenovo Web sites are provided for convenience only and do not in any manner serve as an endorsement of those Web sites. The materials at those Web sites are not part of the materials for this Lenovo product, and use of those Web sites is at your own risk.

© Copyright Lenovo 2024, 2025

Any performance data contained herein was determined in a controlled environment. Therefore, the result obtained in other operating environments may vary significantly. Some measurements may have been made on development-level systems and there is no guarantee that these measurements will be the same on generally available systems. Furthermore, some measurements may have been estimated through extrapolation. Actual results may vary. Users of this document should verify the applicable data for their specific environment.

This document is copyrighted by Lenovo and is not covered by any open source license, including any Linux agreement(s) which may accompany software included with this product. Lenovo may update this document at any time without notice.

For the latest information or any questions or comments, contact or visit the Lenovo Web site:
https://pcsupport.lenovo.com

Trademarks

LENOVO, LENOVO logo, THINKSTATION, and THINKSTATION logo are trademarks of Lenovo. Intel, Optane, Core, and Thunderbolt are trademarks of Intel Corporation or its subsidiaries in the U.S. and/or other countries. Microsoft, Windows, and Cortana are trademarks of the Microsoft group of companies. DisplayPort is a trademark of the Video Electronics Standards Association. The terms HDMI and HDMI High-Definition Multimedia Interface are trademarks or registered trademarks of HDMI Licensing LLC in the United States and other countries. Wi-Fi and Miracast are registered trademarks of Wi-Fi Alliance. USB-C is a registered trademark of USB Implementers Forum. All other trademarks are the property of their respective owners.


Lenovo