BO6717E03X

Multisystem oven, 60 x 60 cm



- AirFry
- Pizza function
- PerfectGrill
- FrozenBake
- BigSpace
- GentleBake
- Removable glass door
- FastPreheat
- HomeMade shape

Features

Interior light:	**Above**	Flat oven inner door glass surface:	**Yes, removable**
Foldable upper heater:	**No**	PerfectGrill:	**Yes**
MultiAir:	**Yes**	SuperSize:	**Yes**

General information

Product group:	**Electric oven**	Oven type:	**Multisystem oven**
Energy efficiency class:	**A**	Colour of the product:	**Stainless Steel**
TouchFree Inox:	**Yes**	Interior material:	**Enamelled steel**
Door hinge:	**Classic**	HomeMade Plus shape:	**Yes**

Efficiency

Usable oven volume:	**77 l**	Max. oven temperature:	**300 °C**
Surface of the largest baking pan:	**1360 cm²**		

Control

Temperature control:	**Mechanical**	Knob shape:	**Non-illuminated push-pull knob**

Heating types

Heating type:	**FastPreheat**	Heating type:	**Lower and upper heater with ventilator**
Heating type:	**Large infra heater with fan**	Heating type:	**AirFry**
Heating type:	**Circular heater with entry steam**	Heating type:	**Lower and upper heater with entry steam**
Heating type:	**Large infra heater**	Heating type:	**GentleBake**
Heating type:	**Pizza function**	Heating type:	**FrozenBake**
Heating type:	**Defrost**	Heating type:	**Cleaning**
Heating type:	**Oven light**		

Equipment

Oven guides:	**1 wire guide**	Roasting spit set:	**No**
Baking pans:	**1 deep enameled baking pan, 1 shallow enameled baking pan**	Wire shelf:	**1 pcs**
MeatProbe:	**No**		

Safety

Door glazing:	**Double glazed oven door with one heat deflector**	Door surface temperature:	**CompactDoor**
Thermoelectric fuse:	**Yes**	Cooling fan:	**Dynamic oven cooling - DC**

Technical data

Energy consumption (venting):	**0.821 kWh**	Power consumption in standby mode:	**1 W**
Connected load:	**3.5 kW**	Width of the product:	**595 mm**
Height of the product:	**595 mm**	Depth of the product:	**564 mm**
Width of niche size for installation max.:	**564 mm**	Width of niche size for installation min.:	**560 mm**
Height of niche size for installation max.:	**600 mm**	Height of niche size for installation min.:	**590 mm**
Depth of niche size for installation min.:	**550 mm**	Width of the packed product:	**620 mm**
Height of the packed product:	**660 mm**	Depth of the packed product:	**675 mm**
Gross weight:	**29.1 kg**	Net weight:	**27.1 kg**
Voltage:	**220-240 V**	Frequency:	**50-60 Hz**
Product code:	**738002**	EAN code:	**3838782477089**

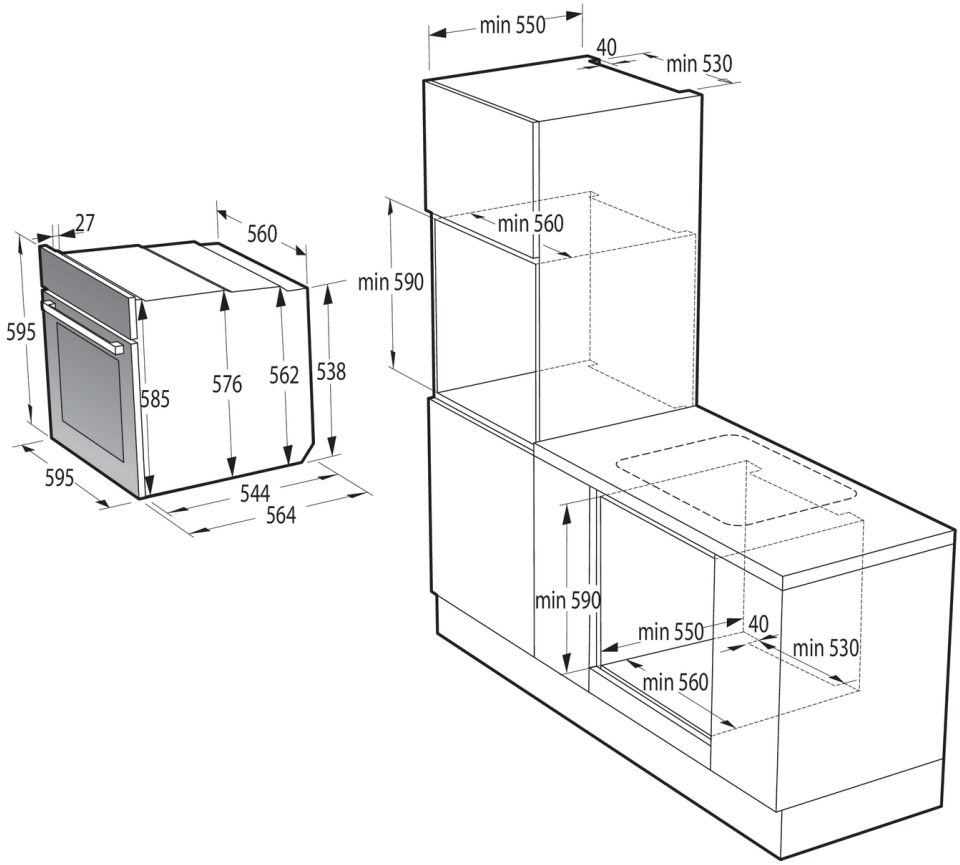
min 550
40
min 530
27
560
min 560
min 590
595
585
576
562
538
595
544
564
min 590
min 550
40
min 530
min 560