Dryer

User Manual



BM3T30230W

2960314176/ EN/ / 22/08/2024 12:14

RECYCLED &
RECYCLABLE PAPER

1Please read this guide before!

Dear Customer,

Thank you for choosing Beko product. We hope you get the best efficiency from this product which has been manufactured with high quality and state of the art technology. Please make sure you read and understand this guide and supplementary documentation fully before using the product.

Observe all warnings and information herein. Therefore you can protect both yourself and your product against potential damages.

Keep the user's manual. Include this guide with the product if you hand it over to someone else.

Symbols in the user manual and on your machine:

	Danger that may result with death or injury.
	Read the user's manual.
	Important information and useful hints about usage.
	Flammable material, warning of fire hazard.
	Warning against UV Radiation hazard.
	The product's packaging is made of recyclable materials, in accordance with the National Environment Legislation.
	Warning against hot surfaces.
	Warning against electrical hazard.
NOTICE	Danger that may cause material damage on the product or surrounding area.

This product has been manufactured at modern facilities respectful to the environment without harming the nature.

Table of Contents

1 Please read this guide before! 2

2 Safety Instructions 4

2.1 Intended Use 4
2.2 Safety of Children, Vulnerable Persons and Pets 4
2.3 Electrical Safety 5
2.4 Transporting Safety 5
2.5 Installation Safety 6
2.6 Usage Safety 8
2.7 Maintenance and Cleaning Safety 10
2.8 Lighting Safety 10

3 Environmental instructions 11

3.1 Compliance with the WEEE Regulations and Waste Disposal 11
3.2 Packaging Information 11
3.3 Standard Conformity and Test Information EU Declaration of Conformity 11

4 Technical Specifications 12

5 General Appearance 13

5.1 Scope of Delivery 13

6 First Operation 14

7 Installation 14

7.1 Right Place for Installation 14
7.2 Removing the Shipping Safety Group 15
7.3 Water Connection 15
7.4 Adjusting the Legs 16
7.5 Moving the Drying Machine 16
7.6 Warnings Regarding the Noise 16
7.7 Replacing the Lighting Bulb 16

8 Preparation 17

8.1 Laundry Suitable for Drying in Drying Machine 17
8.2 Laundry Not Suitable for Drying in Drying Machine 17
8.3 Preparing the Laundry to Be Dried 17
8.4 What to Do for Energy Saving 17
8.5 Correct Load Capacity 18

9 Running the Product 18

9.1 Control Panel 18
9.2 Symbols 19
9.3 Preparation of Drying Machine 19
9.4 Program Selection and Consumption Chart 20
9.5 Auxiliary Functions 22
9.6 Warning Indicators 23
9.7 Starting the Program 23
9.8 Child Lock 23
9.9 Changing the Program After It Is Started 23
9.10 Cancelling the Program 24
9.11 End of Program 24
9.12 Odour Feature 24

10 Maintenance and Cleaning 24

10.1 Fiber Filters (internal and external filters) / Cleaning of the Interior Surface of the Loading Door 25
10.2 Cleaning the sensors 26
10.3 Emptying the Water Tank 26
10.4 Cleaning the Condenser 27

11 Troubleshooting 29

12 Product Information Voucher 32

2 Safety Instructions

- This section includes the information necessary to prevent the risk of personal injury or material damage. Our company shall not be held responsible for damages that may occur if these instructions are not observed.
- Always have the installation and repair work carried out by the manufacturer, an authorized service centre or a person recommended by the importer
- Use original spare parts and accessories only.
- Do not repair or replace any component of the product unless it is clearly specified in the user's manual.
- Do not make technical modifications on the product.

2.1 Intended Use

- Product is designed only for household use. It is not intended for commercial use.
- The product is not designed for outdoor use.
- Do not install or operate the product in areas where freezing is a possibility and/or areas vulnerable to external effects. Water frozen in the pump or the hoses may cause damages.
- Product can only be used to dry and ventilate laundry which are washed with water and drying machine safe.

2.2 Safety of Children, Vulnerable Persons and Pets

- This product may be used by children aged 8 years and older and persons with underdeveloped physical, sensory or mental capabilities or lack of experience and knowledge if they have been given supervision or instruction concerning safe use of the product and the hazards involved. Children should not tamper with the device. Cleaning and maintenance should not be carried out by children unless they are supervised.
- Children under 3 years of age should be kept away from the product unless they are constantly supervised.
- Electrical products are dangerous for children and pets. Children and pets should not play with, climb on or get inside the product.
- Keep the loading door of the product closed even when not operated.

- Cleaning and user maintenance operations should not be performed by children unless supervised.
- Keep the packaging materials away from children. There is risk of injury and suffocation.
- Keep all additives used with the product away from children.
- Before disposing of the product, cut the power cord and destroy the loading door for the safety of children.

⚠ 2.3 Electrical Safety

- The product must not be plugged in during installation, maintenance, cleaning, repair and transportation.
- If the power cable is damaged, it must be replaced by a person designated by the manufacturer, authorized service centre or importer in order to avoid potential hazards.
- Do not tuck the power cord under the product or to the rear of the product. Do not put heavy items on the power cord.
- Power cord should not be kinked, pinched and should not come in contact with any heat source.
- Do not use an extension cord, multi-plug or adaptor to operate the product.
- The product should not be powered via an external switch such as a timer or should not be connected to a circuit that is regularly opened and closed with a tool.
- The plug should be easily accessible. If this is not possible, a mechanism that complies with the electrical legislation and that disconnects all terminals from the mains (fuse, switch, main switch, etc.) should be available on the electrical installation.
- Do not touch the plug with wet hands.
- When unplugging the appliance, don’t hold the power cord, but the plug.

⚠ 2.4 Transporting Safety

- Unplug the product, empty the water tank and if any, remove the water drain connections prior to transport.
- This product is heavy, do not handle it by yourself.
- Take required precautions against the risks of falling and tipping of the product. Do not crash or drop the product when transporting.

- Do not use the extruding parts of the product (such as the loading door) to move the product.
- Move the product in upright position. If it cannot be moved in upright position, transport via tilting to the right side when viewed from the front.

2.5 Installation Safety

- To make the product ready for installation, ensure that the electrical installation and water drain are appropriate by checking the information in the user's manual. If it is not suitable for installation, call a qualified electrician and plumber to make the necessary arrangements. These operations shall be undertaken by the customer.
- This product is designed for use at altitudes up to 2000 metres above sea level.
- Check for any damage on the product before installing it. Do not have the product installed if it is damaged.
- Do not ever remove the adjustable legs.
- Place the product on a clean, level and hard surface and balance with the help of the adjustable legs.
- The gap between the product and the floor should not be reduced via materials such as rugs, pieces of wood and bands. The ventilation holes under the base of the product should not be clogged with a rug.
- The product should be installed in such a way so as not to clog the ventilation holes.
- Install the product in an environment free of dust with good ventilation.
- Do not install the product in close proximity to flammable and explosive materials and do not keep flammable and explosive materials near the product when it is in operation.
- The product should not be installed behind a lockable door, or a door with bolt where the product loading door cannot be completely opened, or a hinged door where the product hinge is faced against the door's hinges.
- Install the product in a place where periodic maintenance and cleaning can be done with ease.
- Place the product with its back surface facing the wall. (For models with heating).

- While placing the product, ensure that the back wall does not come in contact with any extrusion (a water tap, electrical outlet etc.).
- Place the product with at least 1 cm space between the product and the furniture edges.
- Follow the flue connection rules specified in the manual. (For models with flue).
- The discharged air should not be directed to a flue which is used to discharge the smoke of devices that use gas or other fuels. (For models with flue).
- The ventilation hose should not be connected to a heating stove or a chimney flue. (For models with flue).
- Plug the product to a grounded outlet protected with an appropriate fuse in align with the specified type and current rates. Have an expert electrician set grounding equipment. Do not use the product without a grounding conforming with regional/national regulations.
- Plug the product in a grounded socket that conforms with the voltage, current and frequency values specified in the type label.
- Do not plug the product to loose, broken, dirty, greasy sockets or sockets that have come out of their seats or sockets with a risk of water contact.
- The new hose sets supplied with the product should be used. Do not re-use the old hose sets. Do not make attachments to the hoses.
- Place the power cord and hoses in such a way so as not to cause a risk of tripping over.
- Make sure that the hose does not slip or fold if you directly drain the water from the laundry that is generated by the condensation of the moisture. Otherwise, water leaking problem may occur.
- Do not wash the dryer with hose.
- To use the product on top of a washing machine, a fixing aperture should be used between two products. Have the fixing aperture installed by the manufacturer, an authorized service centre or a person specified by the importer.
- Do not use the product without fixing it on floor-high ground, such as on a table or cabinet interior. When used without fixation, it can move and fall over time, damaging living things in

the environment or the objects around it. The carrier floor must be solid and stable.
- When the product is placed on the washing machine, their combined weight when full could be around 180 kg. Place the products on a sturdy floor with an adequate load carrying capacity.
- Washing machine cannot be placed on top of the drying machine.

Suitable Instalment Table for Washing Machine and Drying Machine	
Connection Kit Type	Depth Size (DM: Drying Machine, WM: Washing Machine)
Plastic - 54/60 cm with/without arch	60cm DM --> WM≥50 cm / 54 cm DM --> WM>45 cm
Plastic - 46 cm with/without arch	46 cm DM --> WM≥54 cm
With Shelves - 60 cm	60cm DM --> WM≥50cm
With Shelves - 54cm	54cm DM --> WM>45cm

2.6 Usage Safety

- The maximum weight of dry laundry prior to washing is specified in “Technical Specifications” section.
- Do not dry the unwashed items in the drying machine.
- Do not machine dry clothes exposed to substances like oil, acetone, alcohol, petroleum, kerosene, stain remover, turpentine, massage oil, explosives and combustibles, beeswax and beeswax remover, even if they have been washed.
- If industrial chemicals are utilized for cleaning, the drying machine should not be used.
- Softener or similar products should be used as written in the softener instruction.
- Rubber foam (latex foam), shower bonnets, water resistant textiles, rubber supported materials, clothes with rubber foam pads, and pillows should not be dried in the drying machine.
- Yarn and fluffs dangling from filled and damaged parts can be dispersed in the machine and damage your machine in the drying process. Check the seams of the laundry you are going to dry.
- The items with hair spray, with residue of hair product or similar materials should not be dried in the drying machine.
- Empty the pockets of the clothes and remove all items such as matches and lighters.
- Do not stop the drying machine before the completion of the drying cycle if you won’t be

able to remove all the items rapidly and to lay them down in such a way that heat will be dissipated.

- The last part of the drying machine cycle is conducted without heating (cooling cycle) in order to ensure that the items are kept at a temperature that will not harm the items.
- Laundry softeners or similar products should be used in align with the laundry softener instructions.
- Do not use the drying machine without the fiber filter.
- Do not allow fiber to accumulate around the drying machine.
- Do not operate the dryer with a damaged fiber filter. Otherwise, the machine may be damaged by the collected fluff and your machine's drying performance may be adversely affected.
- Clean the fiber filters after each drying process.
- After washing the fiber filters, dry them. Do not use filters wet.
- To prevent back flow of gas to the room from the devices that consume other fuels, including open fire, appropriate ventilation should be provided (For models with flue).
- Do not operate the product together with heaters such as coal stove and gas heater and a chimney. Airflow can cause the flue to catch fire (For models with flue).
- Do not lean or sit on the loading door when it is open, the product may tip over.
- Do not get on the product.
- Do not place a source of flame (burning candles, cigarettes, etc.) on the product or in the vicinity of it. Do not keep flammable/explosive substances.
- Do not touch the drum as it revolves.
- During operation, the back wall of the product becomes very hot. Do not touch the back of the product during drying or immediately after the completion of drying (For models with heating).
- Do not touch the inner surface of the drum while adding or removing clothes during a continuing programme. The drum surface is hot.
- Do not press the buttons with sharp objects such as forks, knives, with your nails etc.

- Do not operate the faulty or damaged product. Unplug the product (or turn off the fuse to which it is connected) and call the manufacturer, an authorized service agent or a person specified by the importer.
- Unplug the product when not in use.

2.7 Maintenance and Cleaning Safety

- Do not wash the product by spraying or pouring water on it. Do not use a pressure cleaner, steam cleaner, hose or pressurised gun to clean the product.
- Do not use sharp or abrasive tools to clean the product.
- Do not use materials such as household cleaning agents, soaps, detergents, gas, gasoline, thinner, alcohol, wax, etc. to clean the product.
- The fiber filter should be frequently cleaned. After each drying cycle, clean the fiber filter and the inner surface of the loading door.
- Clean the accumulated fiber on the fins of the evaporator behind the filter drawer with a vacuum cleaner. You can clean by hand, provided you wear protective gloves. Do not try to clean with bare hands. Evaporator fins may damage your hands (for products with heat pump).
- Due to fire and explosion hazard, do not use solutions, cleaning materials, steel wool or similar materials and tools to clean sensors.
- Clean the flue (For models with flue).
- Do not drink the condensed water. Condensed water is not potable water. This water can harm human and animal health if drunk.

2.8 Lighting Safety

- Contact an authorized service when you need to replace the LED/bulb used for lighting (for products with lighting).

3 Environmental instructions

3.1 Compliance with the WEEE Regulations and Waste Disposal



This product does not contain the dangerous and prohibited materials indicated in the "Regulation on The Control of Waste Electrical and Electronic Equipment" published by Ministry of Environment and Urbanisation of the Republic of Turkey. Complies with WEEE Regulation. This product was manufactured from recyclable and reusable high quality parts and materials. Therefore, do not dispose of this product with domestic and other wastes at the end of its life cycle. Take it to a collection point for recycling of electrical and electronic equipment. You can ask your local administration about these collection points. Help protect the environment and natural resources by delivering the used products for recycling.

Also R290 is a flammable refrigerant. Therefore ensure that the system and pipes are not damaged during operation and transportation. Keep the product away from possible heat sources, otherwise it may catch fire if damaged. Do not dispose of the product by throwing it into fire.

3.2 Packaging Information

The product's packaging is made of recyclable materials in accordance with the National Legislation. Do not dispose of the packaging waste with the household waste or other wastes, deliver it to the packaging collection areas specified by local authorities.

3.3 Standard Conformity and Test Information EU Declaration of Conformity

CE The development, manufacturing and sales phases of this product is conducted in conformity with the safety rules specified in all related instructions of the European Union

4 Technical Specifications

Height (adjustable) (cm)	84,6 * / 86,6 **
Width (cm)	59,8
Depth (cm)	60,7
Capacity (max.) (kg)	10***
Net weight (±10%) (kg)	44
Voltage	See the type label****
Power	
Main Model Code	

* Min. height: Height with the adjustable legs closed.

** Max. height: Height with the adjustable legs opened at maximum height.

*** Weight of dry laundry before washing.

**** Type label is under the door on the drying machine.

In order to increase the drying machine's quality, the technical specifications may be changed without prior notice.

Figures in this manual are schematic and may not exactly match the product.

The values provided in the symbols on the drying machine or its accompanying documents are values obtained in the laboratory environment in accordance with the respective standards. These values may differ depending on the use and ambient conditions of the drying machine.

5 General Appearance

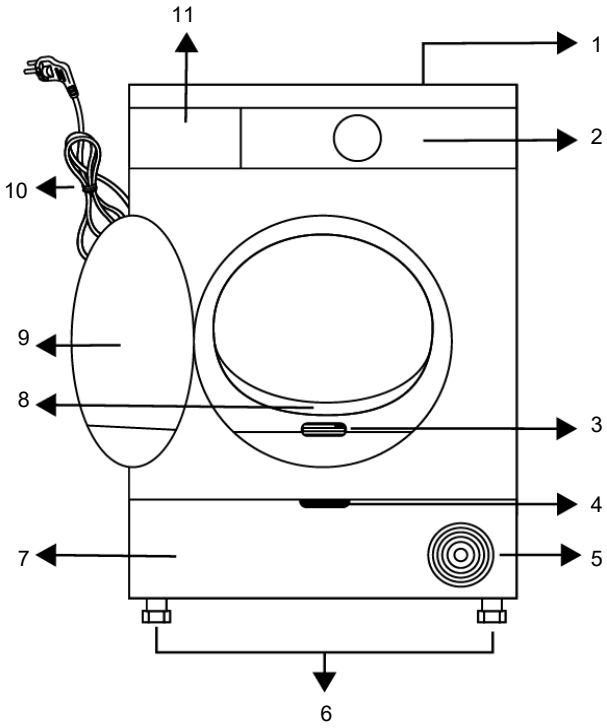

1 Upper table
2 Control Panel
3 Type label
4 Kickplate opening handle
5 Ventilation grills
6 Adjustable legs
7 For the models with tank located at the bottom, the water tank is inside the kickplate
8 Fiber filter
9 Loading door
10 Power cord
11 Water tank drawer (for models with the tank on top)

5.1 Scope of Delivery

: User's Manual

: Filter drawer sponge*

: Odour capsule group*

: Water discharge hose*

: Drying basket*

: Filter cloth*

: Water container*

: Brush*

*The optional accessory may not be available in the product.

6 First Operation

Remove the protective foil and adhesive advertising label if available in your product.



However, please do not remove the labels (e.g. type label) that appear after the lid is opened.

After the device is installed

- operate the machine for the first time according to user's manual.

7 Installation



Read the "Safety Instructions" first.

Before consulting the nearest Authorized Service for installing the drying machine, see the information in the user guide and make sure the electric and water utilities are as required. If it is not suitable for installation, call a qualified electrician and plumber to make the necessary arrangements.

It is customer's responsibility to prepare the location the drying machine shall be placed on and also have power and waste water installation prepared.



Check for any damages on the drying machine before installing it. If drying machine is damaged, do not get it installed. Damaged products cause a risk for your safety. Wait for 12 hours before operating your dryer after initial installation.

7.1 Right Place for Installation

NOTE: The product includes a cooling agent and if the product is operated right after it is transported, it may get damaged. After each time the product is moved, it shall be left to rest for 12 hours.

- Install the drying machine on a flat and stable surface.
- Dryer machine is heavy. Do not move it by yourself.
- Operate the drying machine in an environment free of dust with good ventilation.
- The gap between the drying machine and the floor should not be reduced via materials such as rugs, pieces of wood and bands.
- Do not block the ventilation grilles of the drying machine.
- There shall not be doors that can be locked, sliding doors or hinged doors near the installation environment of the drying machine that may block the loading door to be opened.
- Once the drying machine is installed, the connections must stay stable. While placing the drying machine, ensure that the back wall does not come in contact with any extrusion (a water tap, electrical outlet etc.).
- Place the drying machine with at least 1 cm space between the product and the furniture edges.
- Your drying machine is suitable to be operated between +5 °C and +35 °C. If operated outside this temperature range, your drying machine's operation may be compromised and get damaged.
- The drying machine should be placed with the back side facing a wall.



Do not place the drying machine on its power cord.

Ignore this warning if the product system does not contain R290*. The dryer has R290 refrigerant gas. R290 is an environmentally friendly but flammable cooling gas. Make sure the air intake of the dryer is open and well ventilated. Keep possible flame sources away from the dryer.

7.2 Removing the Shipping Safety Group

Remove the shipping safety group prior to first use of the product.

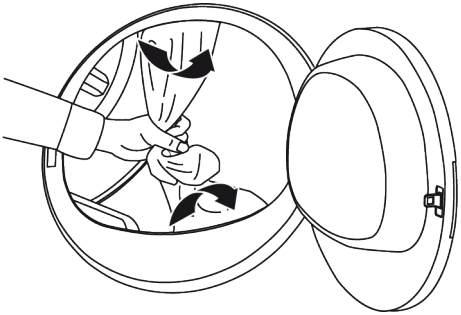

NOTE: Do not leave an accessory or any parts of the shipping safety group inside the drum.

7.3 Water Connection

Instead of periodically draining the water accumulated in the water tank, you can discharge it directly via the water discharge hose supplied with the drying machine.

Connecting the water drainage hose

1. Manually pull the end of the hose behind the dryer from where it is connected. Do not use a tool to remove the hose.

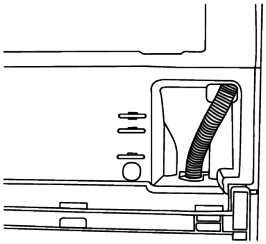

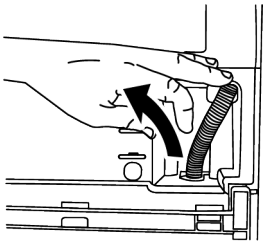

2. Insert one end of the water discharge hose supplied with the drying machine to where you have removed the hose of the drying machine.

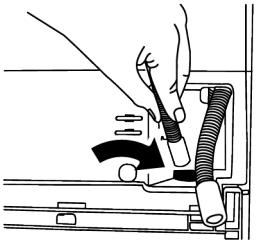

3. Fix the other end of the water discharge hose directly to waste water drainage or a sink.

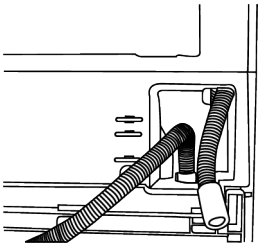

Fix the water discharge hose at a maximum height of 80 cm.
Ensure that the water discharge hose does not get kinked, collapsed or pressed on between the discharge and the drying machine.
Hose connection should be made in such a way that it won't come out of its location. Leaked water may cause damage.
Do not extend the water drainage hose.
Check whether the water flows at an adequate rate or not. The drainage line should not be closed or clogged.

If an accessory package is provided with your product, check the detailed instructions.

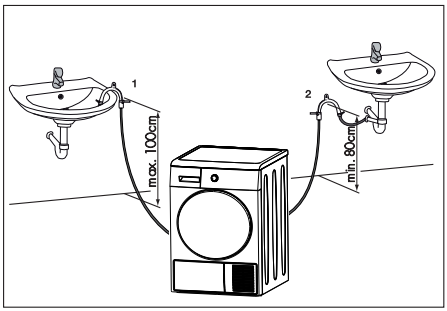

7.4 Adjusting the Legs

Until the drying machine stands level and sturdy, adjust the legs by turning them left and right.

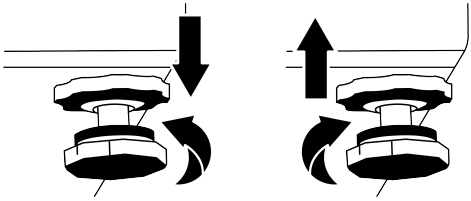

7.5 Moving the Drying Machine

- Drain the water in the drying machine completely.
- If the product is connected via direct discharge, remove the hose connections.

The drying machine is recommended to be moved in upright position. If it cannot be moved in upright position, transport via tilting to the right side when viewed from the front. Wait for 12 hours prior to operating the drying machine.

7.6 Warnings Regarding the Noise

While the product is being operated, it is normal for a metallic noise to come from the compressor from time to time.

The water that accumulates while the product is being operated, is pumped to the water tank via the pump. It is normal to hear pumping sounds from the product during this operation.

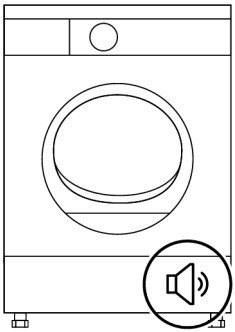

7.7 Replacing the Lighting Bulb

If your drying machine has drum lighting lamp;

Consult the authorized service to replace the bulb/LED used in lighting your drying machine. The bulb in this product is not suitable for home lighting. The intended use of this lamp is to ensure safely loading the laundry to the drying machine. The lamps used in this appliance should be resistant to inappropriate physical conditions such as temperatures over 50 °C.

8 Preparation

Read the “Safety Instructions” first!

8.1 Laundry Suitable for Drying in Drying Machine

Laundry that are not drying machine safe may damage the appliance and the laundry during drying. Follow the instructions on the labels of the laundry to be dried. Only dry the laundry with the “drying machine safe” labels by choosing the suitable programs.

8.2 Laundry Not Suitable for Drying in Drying Machine

- Undergarments with metal supports should not be dried in drying machine. If these metal supports get loose and ripped from the garment, they may damage the machine.
- Delicate embroidery textiles, woollen and silk garments, garments manufactured from delicate and valuable textiles, non breathing garments and tulle curtains should not be dried in drying machine.
- Pay attention to the drying symbols on the label on the laundry. Dry laundry with the label or symbol that says it is suitable for drying in the dryer.



8.3 Preparing the Laundry to Be Dried

Items such as coins, metal parts, needles, nails, screws, stones etc. may damage the drum group of the product or may cause functional operation issues. Therefore check all laundry that will be loaded to the product.

- Dry the laundry with metal accessories such as zippers by turning them inside out.
- Close the zippers, hooks and clasps, button up the covers’ buttons, tie textile belts and apron belts.

8.4 What to Do for Energy Saving

Use the highest possible spinning cycle as you wash the laundry. Therefore you can reduce the drying period and reduce energy consumption. Sort the laundry based on their types and thickness. Dry same types of laundry together. For instance thin kitchen towels and table cloths dry faster than thick bathroom towels.

- Follow the recommendations in the user’s manual for program selection.
- During drying do not open the loading door unless necessary. If you are required to open the loading door, do not keep it open for too long.
- Do not add wet laundry as the drying machine operates.
- Clean the Fiber Filter before and after each drying session.
- For models with condensation, be sure to clean the condenser regularly at least once a month or after 30 drying sessions.
- Make sure the filters are clean. Refer to maintenance and cleaning section for details.
- For models with flue, follow the flue connection rules specified in the guides and clean the flue.
- During drying session, properly ventilate the environment where the drying machine is located.
- In models with heat pump, check the condenser at least every six months and clean it if it is dirty.
- If you are using environment friendly filter, you are not required to clean the filter after every cycle. When the environment friendly icon is lit on the screen, change the filter cloth.

8.5 Correct Load Capacity

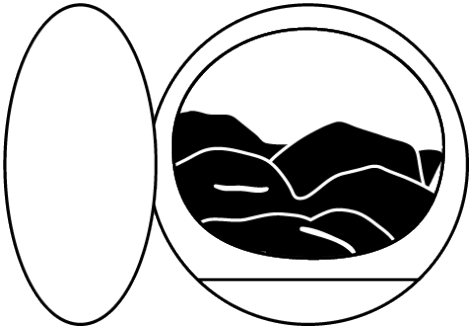

If the laundry in the product exceed maximum loading capacity, it may not operate as intended and may cause material damage or product damage. For each program, follow the maximum loading capacity. Below you can see the laundry and their approximate weight.

Duvet Cover Set: 1000-1500 g
Flat Sheet: 350-500 g
Table Cover: 250-700 g
Towel: 350-700 g
Dress: 350-500 g
Denim Trousers: 500-700 g
T-shirt: 125-200 g
Blouse: 150-250 g
Shirt: 200-300 g

9 Running the Product

9.1 Control Panel

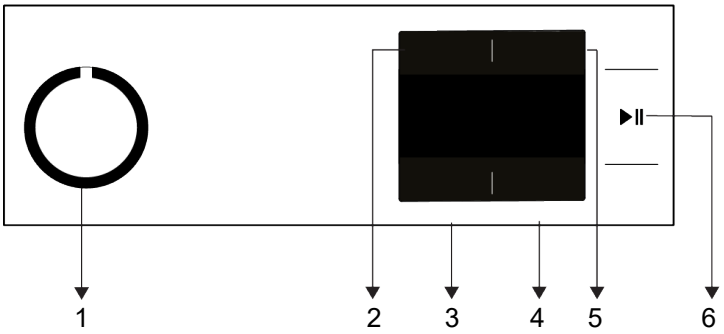

1 On/Off/Programme selection button.
2 Low temperature selection button.
3 Dryness level and Wrinkle prevention selection button.
4 End time and Child lock selection button.
5 Timer program and the audible warning selection button.
6 Start / Standby button.

9.2 Symbols

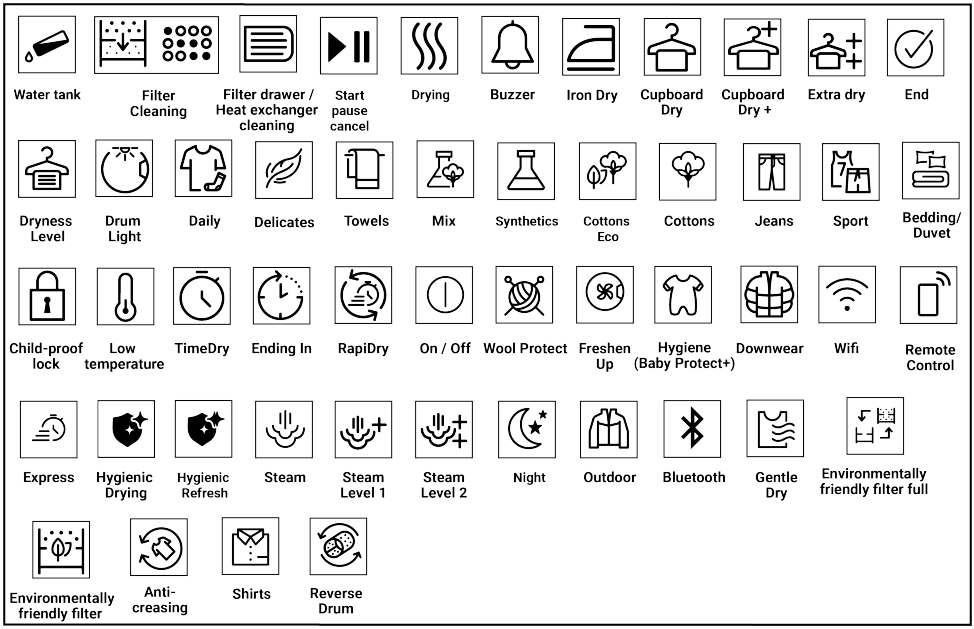

9.3 Preparation of Drying Machine

- Plug the drying machine.
- Open the loading door.

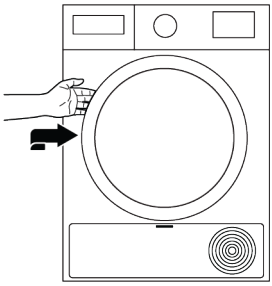

- Place the laundry in the drying machine without jamming them.



- Push and close the loading door.

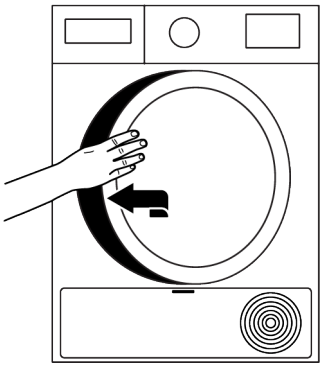

- Ensure that no laundry is jammed to the loading door.
- Do not close the loading door with force.
- Select the desired program by using On/Off program selection button and the machine will turn on.
- Selecting the program with the On/Off program selection button does not mean that the program will get started. Press Start / Standby button to start the program.

9.4 Program Selection and Consumption Chart

Programs	Program Definition	Capacity (kg)	Spin speed of the washing machine (rpm)	Drying Time (min)
Cottons	You can dry your heat-resistant cotton textiles with this program. A drying setting suitable for the thickness of the products to be dried and the desired level of dryness should be selected.	8	1000	230
		10	1000	260
Cottons Eco	It dries single layer, casual cotton textiles in the most economical way.	8	1000	210
		10	1000	239
Cottons Iron dry	Single layer, daily used cotton textiles are dried as slightly damp, ready to be ironed.	8	1000	165
		10	1000	185
Synthetics	You can dry all your synthetic textiles with this program. A drying setting suitable for the level of dryness you desire should be selected.	4	800	75
Mix(Daily)	Use it to dry the synthetic and cotton laundry that do not bleed colour together. Sports - fitness garments can be dried with this program.	4	1000	125
Towels	Use it to dry towels such as kitchen towels, hand towels and bathrobes.	5	1000	170
Outdoor - Sports (Goretex)	You can dry your multilayered and water/windproof functional textile products made of synthetic, cotton or mixed fabrics used for outdoor activities and outdoor sports in this program.	2	1000	135
Freshen Up	It only ventilates for 10-160 minutes without giving hot air. You can ventilate the cotton and linen clothes that have been enclosed for a long time with this program to remove their odour.	-	-	-
Time Programmes	You can select the timer programs from 10 minutes to 160 minutes to achieve the desired final drying level under low temperature. In this program, the dryer dries for the time set regardless of the dryness of the laundry.	-	-	-

Delicates	You can dry your delicate clothes suitable for drying or clothes that are recommended for hand wash (silk blouses, thin underwear etc.) in low temperatures.	2	1200	50
Bedding	Dry 1 cotton or synthetic bedding set by closing the button / zipper	4	800	121
Duvet / Downwear	Use it for drying your down quilt.	-	800	119
Jeans	Use to dry denim clothes spun in the high speed in the washing machine.	4	1200	130
Shirts	Dries shirts and delicate garments and causes less wrinkles for easy ironing.	1,5	1200	50
Hygienické sušení/Hygienické	It is the program in which you can dry your washed textile products you want to provide with extra hygiene (baby clothes, underwear, towels, etc.). It provides high hygiene for your textiles via high heat effect.	5	800	185
Express Super Short	Use this program to get 2 shirts ready for ironing.	0,5	1200	30

Energy consumption values

Programs	Capacity (kg)	Spin speed of the washing machine (rpm)	Approx. humidity left	Energy consumption value kWh
Cottons Eco*	10	1000	60%	2,15
Cottons Iron dry	10	1000	60%	1,85
Synthetics cupboard dry	4	800	40%	0,70



“Cotton Economic Dryness program” is a standard drying program that may be utilized with full or half load and where the information is provided on the product label or the receipt. This program is the most efficient one in terms of energy consumption for drying normal wet cotton loads.



If you are regularly drying a maximum 10 kg of cotton laundry, in order to prevent the drying machine to stop operation during a program due to water tank being filled completely, it is recommended to connect the water discharge hose. (See “Connecting the water drainage hose)

*Energy Label standard programme EN 61121 All the values in the table are determined according to the EN 61121 standard. Consumption values may vary from the values in the chart depending on laundry type, spin speed, ambient conditions and voltage levels.

9.5 Auxiliary Functions

Allergy UK is the trademark of the British Allergy Foundation. The Seal of Approval has been created to guide people requesting an advice that the product significantly reduces the amount of the allergens in the environment where allergic people are present or the product restricts/reduces/eliminates the allergens. Its purpose is to provide evidence that the products have been scientifically tested or analysed to yield measurable results.

Dryness Level

Dryness level button is used for adjusting the desired dryness level. Program time may change depending on the selection.

You can activate this function only prior to operation of program.

Wrinkle Prevention

You can turn the wrinkle prevention function on or off by pressing the end time button for 3 seconds. If you will not take the laundry out immediately after the programme has been completed, you may use Wrinkle prevention function to prevent wrinkling of your laundry.

Audible Warning

Drying machine makes an audible warning when the program is completed. Press the "Audible Warning" button if you do not want audible warning. When you press the audible warning button, its light goes off and it does not sound when the program is completed.

You can select this function before the program starts or after the program has started.

Low Temperature

You can activate this function only prior to operation of program. If you want to dry your laundry at a lower temperature, you can activate this function. Once activated, the program will be extended.

End Time

You can delay the end time of the program up to 24 hours with end time function.

1. Open the loading door and place the laundry.
2. Select the drying program.
3. Press the End Time selection button and set the delay time you wish. End Time LED turns on. (When the button is continuously pressed, End Time proceeds non-stop).
4. Press the Start / Pause button. End Time countdown begins. The ":" sign in the middle of displayed delay time flashes.

You can add or remove laundry within end time. Displayed time is the sum of normal drying time and end time. End Time LED turns off at the end of countdown, the drying starts and the drying LED turns on.

Changing the End Time

If you want to change the duration during the countdown:

1. Cancel the program by turning On / Off / Program selection button after pressing the Start / Standby selection button.
2. Select the desired program and repeat the End Time selection process.

Cancelling the End Time Function

If you want to cancel the end time countdown and start the program immediately:

1. Cancel the program by turning On / Off / Program selection button after pressing the Start / Standby selection button.
2. Select the desired program and press the Start / Standby button.

When you activate the end time function in your dryer, your machine rotates periodically to prevent wrinkles and the odour of moisture. Only the engine power supply will be activated during the wrinkle prevention phase. In addition, if you do not open the lid of your machine or make any interventions, the anti-wrinkle function will be activated after the program is finished.

9.6 Warning Indicators

Warning indicators may vary depending on the model of your drying machine.

Filter cleaning

When the program is completed, the warning indicator for filter cleaning turns on.

Water tank

If the water tank fills up while the program is continuing, the warning indicator starts flashing and the machine goes to standby. In this case, empty the water tank and start the program by pressing the Start / Standby button. Warning indicator turns off and program resumes.

Cleaning of filter drawer/heat exchanger

Warning symbol flashes periodically to remind that filter drawer must be cleaned.

9.7 Starting the Program

Press the Start/Standby button to start the program.
Start/Standby and Drying indicators turn on to show that program has started.

9.8 Child Lock

The drying machine has a child lock which prevents the program flow from being affected when the buttons are pressed during a program. When the Child Lock is activated, all buttons on the panel except the On/Off program selection button are deactivated.

1. Press the End Time button for 3 seconds in order to activate the child lock.
2. When the Child Lock is activated, the child lock warning indicator on the screen turns on.

When the child lock is active;
When the drying machine operates or is in standby state the indicator symbols will not change upon changing the position of the program selection button.

1. The child lock has to be deactivated to be able to start a new program after the current program is finished or to be able to interfere with the current program.
2. To deactivate the child lock, keep the same button pressed for 3 seconds again.

When the drying machine is operated and the child lock is active, if the program selection button is turned, a double beeping noise will be heard. If the child lock is deactivated before the program selection button is turned to its original place, the program will be terminated because the program selection button will be displaced.

9.9 Changing the Program After It Is Started

You can change the program you selected to dry your laundry with a different program after the drying machine starts running.

1. For example, turn the On/Off/Program Selection button to select the Extra Dry program in order to select the Extra Dry program instead of Ironing Dryness after pressing the Start / Standby selection button.
2. Press the Start/Standby button to start the program.

Adding and removing clothes during standby state

If you want to add or remove clothes to/ from the drying machine after the drying program has started:

1. Press the Start/Standby button to put the drying machine in Standby state. The drying operation stops.
2. Open the loading door while in Standby state, and close the door after you remove or add laundry.
3. Press the Start/Standby button to start the program.

Adding laundry after the drying operation starts may cause the dried laundry inside the drying machine to mix with wet laundry and leave the laundry damp at the end of operation.
Adding or removing laundry during drying may be repeated as many times as you wish. But this operation continuously interrupts the drying operation and thus increases program time and energy consumption. So, it is recommended to add laundry before the program starts.
If a new program is selected by turning the program selection button while the drying machine is in standby state the running program terminates.

Do not touch the inner surface of the drum while adding or removing clothes during a continuing program. The drum surface is hot.

9.10 Cancelling the Program

If you want to cancel the program and terminate the drying operation for any reason after the drying machine starts running, turn the On/Off/Program Selection button after pressing the Start / Standby selection button; and the program terminates.

The inside of the drying machine shall be extremely hot when you cancel the program during machine operation, so run the refreshing program to allow it to cool down.

9.11 End of Program

When the program ends, the LEDs of End/ Wrinkle Prevention and Fiber Filter Cleaning Warning on the program follow-up indicator turn on. Loading door can be opened and drying machine is ready for another operation.
Turn the On/Off/Program Selection button to On/Off position in order to turn the drying machine off.

If the wrinkle prevention mode is active and the laundry is not removed after the program is completed, the wrinkle prevention function activates for 2 hours to prevent the laundry inside the machine to get wrinkled. The program turns the laundry with 10-minute intervals to prevent them from wrinkling.

9.12 Odour Feature

If your drying machine has odour feature, read the ProScent user's manual to use this feature.

10 Maintenance and Cleaning

Read the "Safety Instructions" first!

If it is cleaned regularly, the life of the product will be extended and common problems will be reduced.

10.1 Fiber Filters (internal and external filters) / Cleaning of the Interior Surface of the Loading Door

The hair and fibers that are separated from the laundry during drying process is collected by the Fiber Filter.

After each drying cycle, clean the fiber filter and the inner surface of the loading door.

NOTE: Your drying machine has 2 fiber filters with one placed inside the other. Do not operate the product without the fiber filters.

To clean the fiber filters:

1. Open the loading door.
2. Hold the first part (inner filter) of the two part fiber filter and remove it by pulling it upwards.

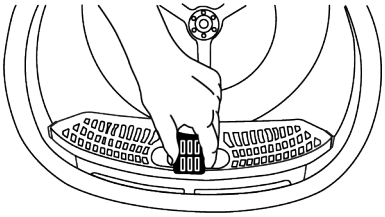

3. Remove the second part (outer filter) by pulling it upwards.

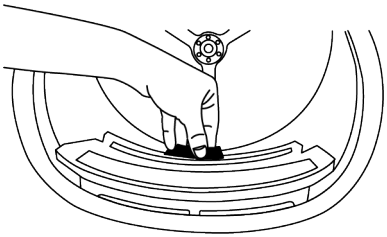

Ensure that hair, fiber and cotton balls do not fall into the open slot where the filters are installed.

4. Open both of the fiber filters (outer and inner filters) and remove the fibers with your hands or with the brush on the air deflector. You can also clean the hair in the filters with a vacuum cleaner.

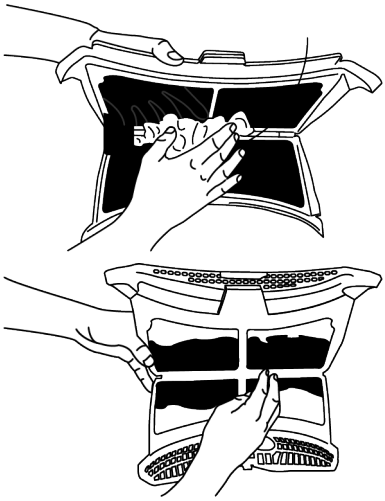

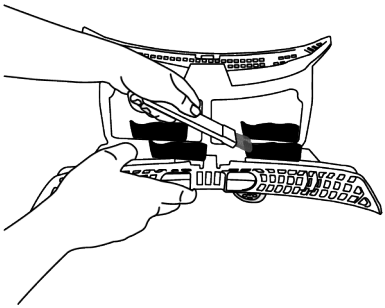

5. Clean both filters under running water in reverse direction of fiber accumulation with your hand or with a soft brush. Dry the filters before placing them back.

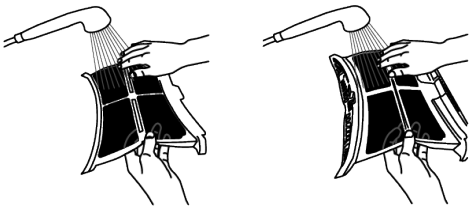

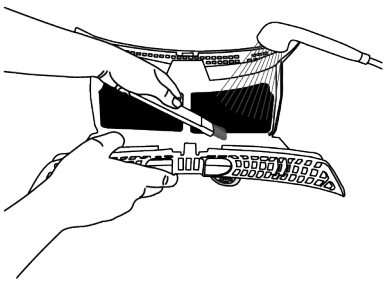

6. Insert the fiber filters on one another and place them back in their place.

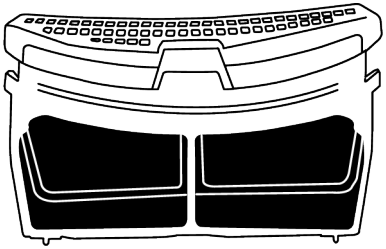

7. Clean all the inner surfaces of the loading door and its gasket with a soft damp cloth or the brush on the air deflector.

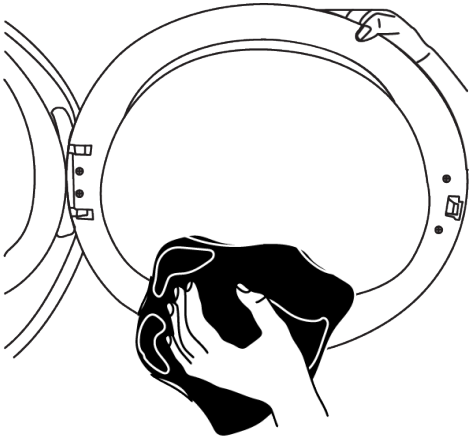

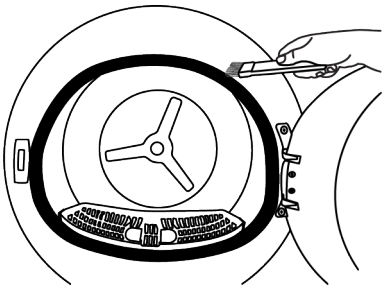

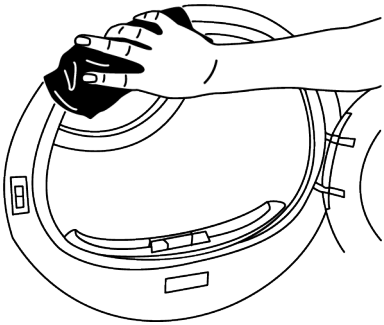

10.2 Cleaning the sensors

There is a temperature sensor that detects whether the laundry is dry or not.

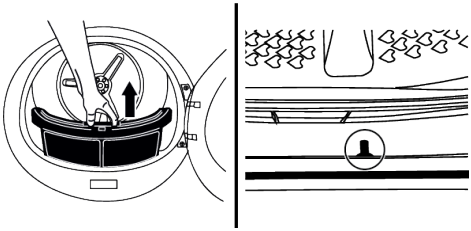

To clean the sensor:

1. Open the drying machine loading door.
2. Pull out the fiber filter upwards.
3. If there is a build-up of feathers on the sensor, clean the sensor with your hand.
4. Do not use metal tools to clean the sensor's metal surfaces.

Do not use metal tools to clean the sensor's metal surfaces.

Due to fire and explosion hazard, do not use solutions, cleaning materials or similar materials to clean sensors.

10.3 Emptying the Water Tank

During drying, the moisture is removed from the laundry and condensed, then the water is accumulated in the water tank. Empty the water tank after each drying session.

Condensed water is not potable water!
Do not ever remove the water tank while the program is running!

If you forget to empty the water tank, during the next drying sessions the machine will stop operating when the water tank completely fills and a Water Tank warning icon will blink. In this case empty the water tank and to continue drying operation, press the Start / Standby button.

To drain the water tank:

1. Pull the water tank out from its drawer carefully.

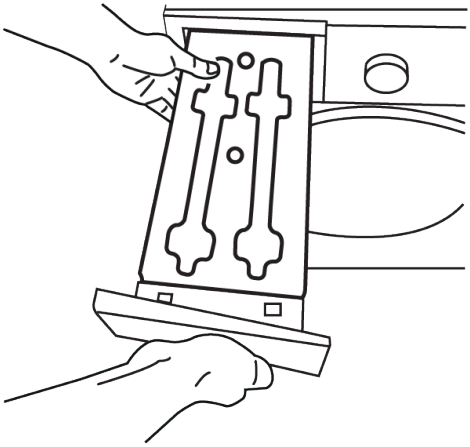

2. Remove the water in the water tank.

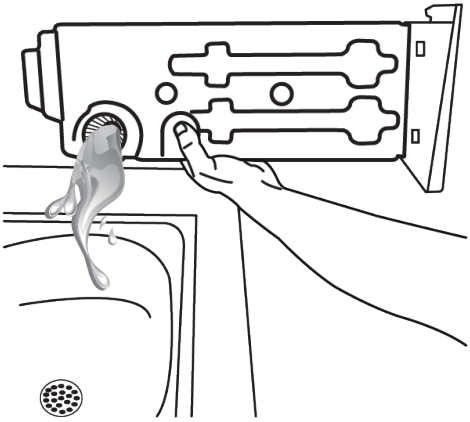

3. If fiber is accumulated in the funnel on the water tank, remove it under running water.
4. Place back the water tank.

If direct discharge option is used, water tank is not required to be drained.

10.4 Cleaning the Condenser

The hair and the fiber that are not collected by the fiber filter accumulates on the metal surface of the condenser behind the air deflector. These fibers should be cleaned regularly.
If the condenser cleaning icon is blinking, check the metal surface. Clean the fiber, if there is any. It must be checked at least every 6 months.

1. Open the kickplate by pulling its handle.

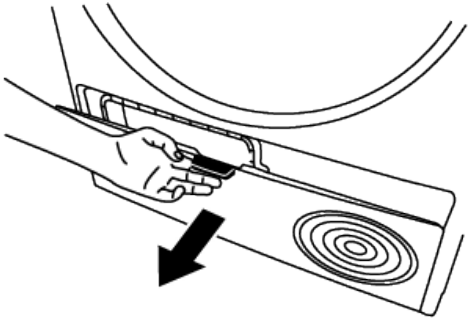

2. Move the latches to open the air deflector lid.

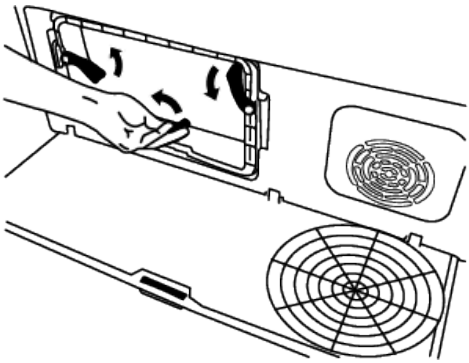

3. Pull the brush to the left to remove it. You can use the cleaning brush to clean the fiber accumulated on filter, metal surface of condenser and loading door.

> The cleaning brush is inside the manual bag. You can get your brush from the manual bag and insert it to its place on the air deflector to store it.

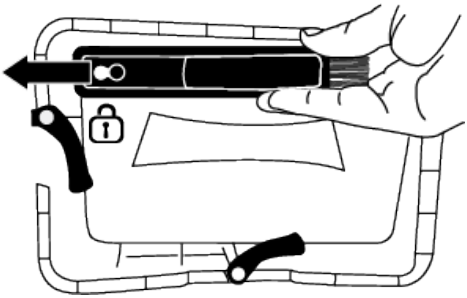

Clean the fiber on the metal surface of the condenser with damp cloth or with the brush on the air deflector in up - down direction. Do not clean in left - right direction since it will damage the metal plates of the condenser.

You can also use a vacuum cleaner with a brush for cleaning. If the vacuum cleaner does not have a brush, it is not recommended to be used for condenser cleaning

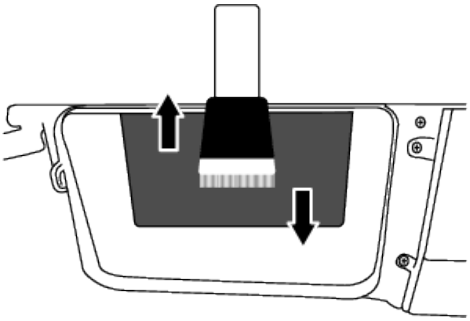

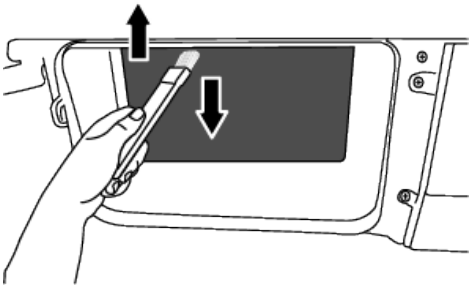

After cleaning the filter, door and the condenser, drag the brush to the right and lock it in its place.

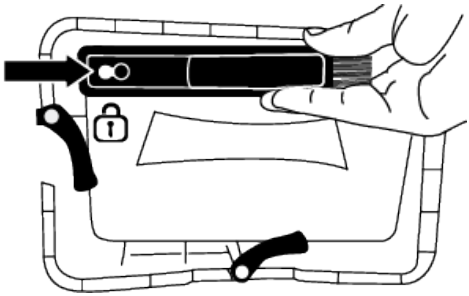

After the cleaning process is completed, place the air deflector cover to its place, close the latches by moving them and close the kickplate.

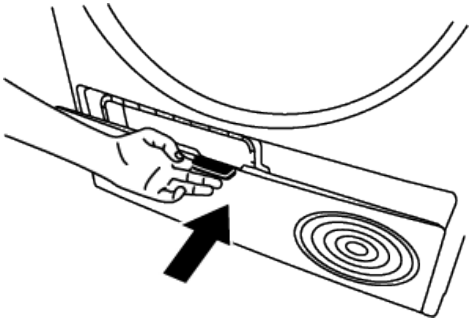

NOTE: You can clean by hand, provided you wear protective gloves. Do not try to clean with bare hands. The condenser fins may damage your hands. Cleaning from left to right may damage the condenser fins. This may lead to drying issues.

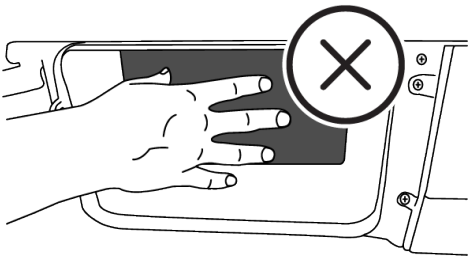

When the air deflector cover is removed, it is normal to have water at the plastic section in front of the condenser.

If you see fiber accumulation on the fan cover and the kickplate, remove it with a cloth.

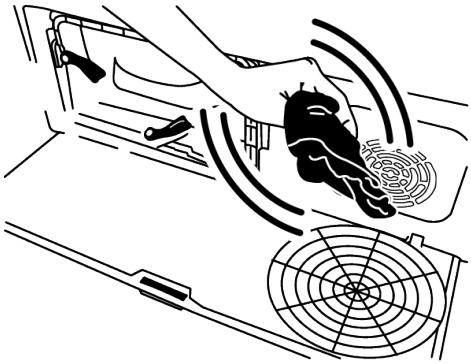

Do not put weight on the kickplate when it is open.

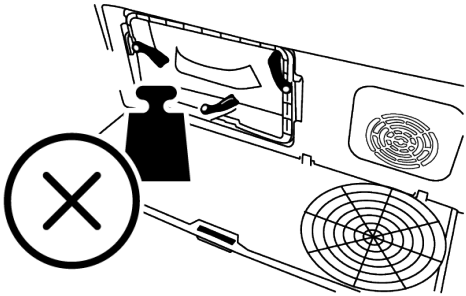

Do not use abrasive materials or steel wool to clean the drum.

11 Troubleshooting

Drying operation takes too long.

- Fiber filter (interior and exterior filters) pores may be clogged. >>> Wash the fiber filters with warm water and dry.
- Front side of the condenser may be clogged. >>> Clean the front side of the condenser.
- The ventilation grills in front of the machine may be closed. >>> Remove any object in front of the ventilation grills that blocks ventilation.
- Ventilation may be inadequate because the area where the machine is installed is too small. >>> Open the door or windows to prevent the room temperature from rising too much.
- If there is a humidity sensor, a lime layer may have accumulated on the humidity sensor. >>> Clean the humidity sensor.
- Excessive amount of laundry might be loaded. >>> Do not load the drying machine excessively.
- Laundry might not have been spun adequately. >>> Perform a higher speed spinning on the washing machine.

Clothes come out damp after drying.

- A program not suitable for the laundry type may have been used.>>> Check the maintenance labels on the clothes and select a program suitable for the clothes' type or use extra time programs.
- Fiber filter (interior and exterior filters) pores may be clogged. >>> Wash the filters with warm water and dry.
- Front side of the condenser may be clogged. >>> Clean the front side of the condenser.

- Excessive amount of laundry might be loaded. >>> Do not load the drying machine excessively.
- Laundry might not have been spun adequately. >>> Perform a higher speed spinning on the washing machine.

Drying machine does not turn on or program cannot be started. Drying machine does not run after it is configured.

- Power plug might be unplugged. >>> Make sure the power plug is plugged in.
- Loading door might be open. >>> Make sure that the loading door is properly closed.
- A program might not be set or Start / Standby button might not be pressed. >>> Make sure that the program is set and it is not in Standby position.
- Child lock may be activated. >>> Turn off the child lock.

Program terminated prematurely for no reason.

- Loading door might not be closed properly. >>> Make sure that the loading door is properly closed.
- There might be a power outage. >>> Press the Start / Standby / Cancel button to start the program.
- Water tank may be full. >>> Empty the water tank.

Clothes have shrunk, hardened or spoiled.

- A program not suitable with the laundry type might have been used. >>> Check the maintenance labels on the clothes and select a program suitable for the clothes.

Water drips from the loading door.

- Fibers might have gathered on the inner surfaces of the loading door and on the surfaces of the loading door gasket. >>> Clean the inner surfaces of the loading door and the loading door gasket surfaces.

Loading door opens by itself.

- Loading door might not be closed properly. >>> Push the loading door until the closing sound is heard.

Water tank warning symbol is on/flashing.

- Water tank may be full. >>> Empty the water tank.
- Water discharge hose might have folded. >>> If the product is connected directly to the water discharge check the water discharge hose.

The lighting inside the drying machine does not turn on (in models with lamp).

- The drying machine might not have been turned on by the On/Off button. >>> Check that the drying machine is turned on.
- Lamp might be malfunctioning. >>> Contact Authorized Service to replace the lamp

Anti-Crease icon or light is lit.

- Anti-Crease program that prevents the laundry in the dryer from creasing may be activated. >>> Turn the drier off and remove the laundry.

Fiber filter cleaning icon is lit

- Fiber filter (interior and exterior filters) may be unclean. >>> Wash the filters with warm water and dry.
- A layer may be formed in the fiber filter pores that leads to clogging. >>> Wash the filters with warm water and dry.
- A layer may be formed in the fiber filter (inner and outer filters) pores that leads to clogging. Wash the filters with warm water and dry.
- Fiber filters may not be inserted. >>> Insert the interior and exterior filters to their places.
- Environmentally-friendly filter cloth may not be installed on the plastic part and the front of the condenser may have been clogged.>>>Install the environmentally-friendly filter to the plastic part and place it in the filter housing.
- Environmentally-friendly filter may not have been replaced although the warning symbol is illuminated. >>> Replace your filter.

An audible warning is heard from the machine.

- Fiber filters may not be inserted. >>> Insert the interior and exterior filters to their places.
- Filters of the machine may not have been installed.>>> Install the fiber filters (internal and external) or the environmentally-friendly filter to their housing.

Condenser warning icon is flashing.

- Condenser front side may be clogged with fibers. >>> Clean the front side of the condenser.
- Fiber filters may not be inserted. >>> Insert the interior and exterior filters to their places.

The lighting inside the drying machine turns on (in models with lamp).

- If the drying machine is plugged to the power outlet, the On/Off button is pressed and the door is open; the light turns on. >>> Unplug the drying machine or bring the On/Off button to Off position.

The steam symbol is flashing (In products with steam function).

- There may not be enough water in the machine for the program. >>> Run in a program without cycle steam function.

Steam programs aren't starting. (In products with steam function)

- There may not be enough water in the machine for the program >>> Run in a program without cycle steam function.

Wrinkle level does not decrease in the wrinkle program (In products with steam function)

- The amount of laundry maybe higher than recommended. >>>Load desired amount of laundry.
- The time of steam application may be low. >>> Select longer time for steam application.
- At the end of the program, laundry might have been left in the machine for a long time. >>>At the end of the program, immediately remove the laundry and hang them on a rope.

The odour in the laundry does not decrease in the deodorization program (In products with deodorization function).

- The amount of laundry maybe higher than recommended. >>>Load desired amount of laundry.
- The time of steam application may be low. >>> Select longer time for steam application

Wi-Fi icon flashes continuously (for models featuring HomeWhiz Function).

The product may not be connected to the wireless network. >>>Connect to the network following the instructions. There may be a problem on the network where the product is connected. >>>Check it. The product may not be connecting to the network due to proximity.

If you see "F L t" on the screen, check the steps below.

- The filters may be dirty. >>> Clean the inner and outer filters or replace the eco-friendly filter.
- In the door area, if you are using the inner and outer dual filters. >>> Make sure that both filters are installed.
- If you are using the eco-friendly filter feature, make sure that the filter cloth is attached to the plastic part. >>>Insert the filter cloth into the plastic part if it is not inserted.
- Front side of the condenser may be dirty. >>> Open and check the kick zone and make sure it is clean.
- Check out the Maintenance and Cleaning section.

If the problem persists after following the instructions in this section, contact your vendor or an Authorized Service. Never try to repair your product yourself.

If you experience a problem with any part of your device, you can request a replacement by consulting the nearest authorised service with the device model number.

12 Product Information Voucher

It complies with the Statutory Commission Regulation (EU) No 392/2012.		
Supplier name or trademark		BEKO
Model name		7188238870 - BM3T30230W
Normal capacity (kg)		10.0
Drying Machine type	With flue	-
	With condenser	•
Energy efficiency class (1)		A++
Annual Energy Consumption (kWh) (2)		255.4
Control type	Automatic	•
	Manual	-
Energy consumption (kWh) in standard cotton program at full load		2,15
Energy consumption (kWh) in standard cotton program at partial load		1,13
Energy consumption in "Closed Mode" PO (W)		0,50
Energy consumption in "On" mode P L (W)		1,00
"On" mode duration (min)		30
Standard Cotton program (3)		•
Duration of standard cotton program at full load, Tdry (min)		239
Duration of standard cotton program at partial load, Tdry 1/2 (min)		130
Weighted duration of standard cotton program at partial and full load (T t)		177
Condensation efficiency class (4)		B
Average condensation efficiency of standard cotton program at full load, Cdry		88%
Average condensation efficiency of standard cotton program at partial load, C dry1/2		88%
Weighted condensation efficiency of standard cotton program at full and partial load, C t		88%
Product volume level (5)		64
Under-the-counter use		-

• Yes / - No

(1) From Efficiency class A+++ (highest yield) to D (lowest efficiency)

(2) In the standard cotton wardrobe program, it is the energy consumption value calculated by taking into account low power modes based on 160 drying cycles under full and half load conditions. The energy consumption value per real cycle depends on the use of the dryer.

(3) "Cotton wardrobe program" is a standard drying program that may be utilized with full or half load and where the information is provided on the product label or the receipt. This program is the most efficient one in terms of energy consumption for drying normal wet cotton loads.

(4) From efficiency class G (lowest efficiency) to A (highest efficiency)

(5) Weighted average value — L WA unit dB(A) is expressed with re 1 pW.