Electrolux

electrolux.com/register

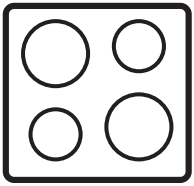

KIS62453IZ

EN User Manual | **Hob**

Welcome to Electrolux! Thank you for choosing our appliance.



Get usage advice, brochures, troubleshooting, service and repair information:
www.electrolux.com/support

Subject to change without notice.

CONTENTS

1. SAFETY INFORMATION..... 2
2. SAFETY INSTRUCTIONS..... 4
3. INSTALLATION..... 6
4. PRODUCT DESCRIPTION..... 9
5. BEFORE FIRST USE..... 11
6. DAILY USE..... 11
7. ADDITIONAL FUNCTIONS..... 15
8. HINTS AND TIPS..... 17
9. CARE AND CLEANING..... 19
10. TROUBLESHOOTING..... 20
11. TECHNICAL DATA..... 22
12. ENERGY EFFICIENCY..... 23
13. ENVIRONMENTAL CONCERNS..... 24

1. ⚠ SAFETY INFORMATION

Before the installation and use of the appliance, carefully read the supplied instructions. The manufacturer is not responsible for any injuries or damage that are the result of incorrect installation or usage. Always keep the instructions in a safe and accessible location for future reference.

1.1 Children and vulnerable people safety

- This appliance can be used by children aged from 8 years and above and persons with reduced physical, sensory or mental capabilities or lack of experience and knowledge if they have been given supervision or instruction concerning the use of the appliance in a safe way and understand the hazards involved. Children of less than 8 years of age and persons with very extensive and complex disabilities shall be kept away from the appliance unless continuously supervised.

- Children should be supervised to ensure that they do not play with the appliance.
- Keep all packaging away from children and dispose of it appropriately.
- WARNING: The appliance and its accessible parts become hot during use. Keep children and pets away from the appliance when in use and when cooling down.
- If the appliance has a child safety device, it should be activated.
- Children shall not carry out cleaning and user maintenance of the appliance without supervision.

1.2 General Safety

- This appliance is for cooking purposes only.
- This appliance is designed for single household domestic use in an indoor environment.
- This appliance may be used in offices, hotel guest rooms, bed & breakfast guest rooms, farm guest houses and other similar accommodation where such use does not exceed (average) domestic usage levels.
- WARNING: The appliance and its accessible parts become hot during use. Care should be taken to avoid touching heating elements.
- WARNING: Unattended cooking on a hob with fat or oil can be dangerous and may result in fire.
- Smoke is an indication of overheating. Never use water to extinguish the cooking fire. Switch off the appliance and cover flames with e.g. a fire blanket or lid.
- WARNING: The appliance must not be supplied through an external switching device, such as a timer, or connected to a circuit that is regularly switched on and off by a utility.
- CAUTION: The cooking process has to be supervised (even the automatic cooking functions). A short term cooking process has to be supervised continuously.
- WARNING: Danger of fire: Do not store items on the cooking surfaces.

- Metallic objects such as knives, forks, spoons and lids should not be placed on the hob surface since they can get hot.
- Do not use the appliance before installing it in the built-in structure.
- Do not use water spray and steam to clean the appliance.
- After use, switch off the hob element by its control and do not rely on the pan detector.
- WARNING: If the surface is cracked, switch off the appliance to avoid the possibility of electric shock. In case the appliance is connected to the mains directly using junction box, remove the fuse to disconnect the appliance from power supply. In either case contact the Authorised Service Centre.
- If the supply cord is damaged, it must be replaced by the manufacturer, an authorized Service or similarly qualified persons in order to avoid a hazard.
- WARNING: Use only hob guards designed by the manufacturer of the cooking appliance or indicated by the manufacturer of the appliance in the instructions for use as suitable or hob guards incorporated in the appliance. The use of inappropriate guards can cause accidents.

2. SAFETY INSTRUCTIONS

2.1 Installation

⚠ **WARNING!**

Only a qualified person must install this appliance.

⚠ **WARNING!**

Risk of injury or damage to the appliance.

- Remove all the packaging.
- Do not install or use a damaged appliance.
- Follow the installation instructions supplied with the appliance.
- Keep the minimum distance from other appliances and units.
- Always take care when moving the appliance as it is heavy. Always use safety gloves and enclosed footwear.
- Seal the cut surfaces of the cabinet with a sealant to prevent moisture from causing swelling.
- Protect the bottom of the appliance from steam and moisture.
- Do not install the appliance next to a door or under a window. This prevents hot cookware from falling from the appliance when the door or the window is opened.
- Each appliance has cooling fans on the bottom.
- If the appliance is installed above a drawer:

  - Do not store any small pieces or sheets of paper that could be pulled in, as they can damage the cooling fans or impair the cooling system.
  - Keep a distance of minimum 2 cm between the bottom of the appliance and parts stored in the drawer.
- Remove any separator panels installed in the cabinet below the appliance.

2.2 Electrical Connection

⚠ WARNING!

Risk of fire and electric shock.

- All electrical connections should be made by a qualified electrician.
- The appliance must be earthed.
- Before carrying out any operation make sure that the appliance is disconnected from the power supply.
- Make sure that the parameters on the rating plate are compatible with the electrical ratings of the mains power supply.
- Make sure the appliance is installed correctly. Loose and incorrect electricity mains cable or plug (if applicable) can make the terminal become too hot.
- Use the correct electricity mains cable.
- Do not let the electricity mains cable tangle.
- Make sure that a shock protection is installed.
- Use the strain relief clamp on the cable.
- Make sure the mains cable or plug (if applicable) does not touch the hot appliance or hot cookware, when you connect the appliance to a socket.
- Do not use multi-plug adapters and extension cables.
- Make sure not to cause damage to the mains plug (if applicable) or to the mains cable. Contact our Authorised Service Centre or an electrician to change a damaged mains cable.
- The shock protection of live and insulated parts must be fastened in such a way that it cannot be removed without tools.
- Connect the mains plug to the mains socket only at the end of the installation. Make sure that there is access to the mains plug after the installation.
- If the mains socket is loose, do not connect the mains plug.
- Do not pull the mains cable to disconnect the appliance. Always pull the mains plug.
- Use only correct isolation devices: line protecting cut-outs, fuses (screw type fuses removed from the holder), earth leakage trips and contactors.
- The electrical installation must have an isolation device which lets you disconnect the appliance from the mains at all poles. The isolation device must have a contact opening width of minimum 3 mm.
- If the E3 code appears on the screen, immediately disconnect the hob and check if the electrical connection and the mains voltage are correct.

2.3 Use

⚠ WARNING!

Risk of injury, burns and electric shock.

- Do not change the specification of this appliance.
- Remove all the packaging, labelling and protective film (if applicable) before first use.
- Make sure that the ventilation openings are not blocked.
- Do not let the appliance stay unattended during operation.
- Set the cooking zone to “off” after each use.
- Do not put cutlery or saucepan lids on the cooking zones. They can become hot.
- Do not operate the appliance with wet hands or when it has contact with water.
- Do not use the appliance as a work surface or as a storage surface.
- If the surface of the appliance is cracked, disconnect immediately the appliance from the power supply. This to prevent an electrical shock.
- Users with a pacemaker must keep a distance of minimum 30 cm from the induction cooking zones when the appliance is in operation.
- When you place food into hot oil, it may splash.
- Do not use aluminum foil or other materials between the cooking surface and the cookware, unless otherwise

specified by the manufacturer of this appliance.
- Use only accessories recommended for this appliance by the manufacturer.

⚠ WARNING!

Risk of fire and explosion.

- Fats and oil when heated can release flammable vapours. Keep flames or heated objects away from fats and oils when you cook with them.
- The vapours that very hot oil releases can cause spontaneous combustion.
- Used oil, that can contain food remnants, can cause fire at a lower temperature than oil used for the first time.
- Do not put flammable products or items that are wet with flammable products in, near or on the appliance.

⚠ WARNING!

Risk of damage to the appliance.

- Do not keep hot cookware on the control panel.
- Do not put a hot pan cover on the glass surface of the hob.
- Do not let cookware boil dry.
- Be careful not to let objects or cookware fall on the appliance. The surface can be damaged.
- Do not activate the cooking zones with empty cookware or without cookware.
- Cookware made of cast iron or with a damaged bottom can cause scratches on the glass / glass ceramic. Always lift these objects up when you have to move them on the cooking surface.

2.4 Care and cleaning

- Clean the appliance regularly to prevent the deterioration of the surface material.
- Switch off the appliance and let it cool down before cleaning.
- Do not use water spray and steam to clean the appliance.
- Clean the appliance with a moist soft cloth. Use only neutral detergents. Do not use abrasive products, abrasive cleaning pads, solvents or metal objects, unless otherwise specified.

2.5 Service

- To repair the appliance contact the Authorised Service Centre. Use original spare parts only.
- Concerning the lamp(s) inside this product and spare part lamps sold separately: These lamps are intended to withstand extreme physical conditions in household appliances, such as temperature, vibration, humidity, or are intended to signal information about the operational status of the appliance. They are not intended to be used in other applications and are not suitable for household room illumination.

2.6 Disposal

⚠ WARNING!

Risk of injury or suffocation.

- Contact your local authority for information on how to dispose of the appliance.
- Disconnect the appliance from the mains supply.
- Cut off the mains electrical cable close to the appliance and dispose of it.

3. INSTALLATION

⚠ WARNING!

Refer to Safety chapters.

3.1 Before the installation

Before you install the hob, write down the information below from the rating plate. The rating plate is on the bottom of the hob.

Serial number .....

3.2 Built-in hobs

Only use the built-in hobs after you assemble the hob into correct built-in units and work surfaces that align to the standards.

3.3 Connection cable

- The hob is supplied with a connection cable.
- To replace the damaged mains cable, use the cable type: H05V2V2-F which withstands a temperature of 90 °C or higher. A single wire must have a minimal cross section in accordance with the table below. Speak to your local Service Centre. The connection cable may only be replaced by a qualified electrician.

⚠ WARNING!

All electrical connections must be made by a qualified electrician.

⚠ CAUTION!

Connections via contact plugs are forbidden.

⚠ CAUTION!

Do not drill or solder the wire ends. It is forbidden.

⚠ CAUTION!

Do not connect the cable without cable end sleeve.

One-phase connection

1. Remove the cable end sleeve from black, brown and blue wires.
2. Remove a part of the insulation of the brown, black and blue cable ends.
3. Connect the ends of black and brown cables.
4. Apply a new wire end sleeve on the shared wire's end (special tool required).
5. Connect the ends of two blue cables.
6. Apply a new wire end sleeve on the shared wire's end (special tool required).

Two-phase connection

1. Remove the cable end sleeve from blue wires.
2. Remove a part of the insulation of the blue cable ends.
3. Connect the ends of two blue cables.
4. Apply a new end wire sleeve on the shared wire's end (special tool required).

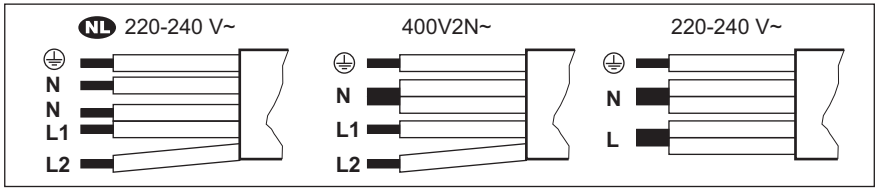

NL 220 - 240 V~		Two-phase connection: 400 V2N~		One-phase connection: 220 - 240 V~	
5x1,5 mm²		**5x1,5 mm² or 4x2,5 mm²**		**5x1,5 mm² or 3x4 mm²**	
⏚	Green - yellow	⏚	Green - yellow	⏚	Green - yellow
N	Blue and blue	N	Blue and blue	N	Blue and blue
L1	Black	L1	Black	L	Black and brown
L2	Brown	L2	Brown		

3.4 Attaching the seal - Integrated installation

1. Clean the rabbets in the worktop.
2. Cut the supplied 3x10 mm seal stripe into four stripes. The stripes must have the same length as the rabbets.
3. Cut the ends of the stripes at an angle of 45°. They should fit in the corners of the rabbets accurately.
4. Attach the stripes to the rabbets. Do not stretch the stripes. Do not bond the ends of the stripes one over the other.

After you assemble the hob, seal the remaining gap between the glass ceramic and the worktop with silicone. Make sure the silicone does not get under the glass ceramic.

3.5 Attaching the seal - On-top installation

1. Clean the worktop around the cut out area.
2. Attach the supplied 2x6 mm seal stripe to the lower edge of the hob, along the outer edge of the glass ceramic. Do not stretch it. Make sure that the ends of the seal stripe are located in the middle of one side of the hob.
3. Add some millimetres to the length when you cut the seal stripe.
4. Join the two ends of the seal stripe together.

3.6 Assembly

If you install the hob under a hood, please see the installation instructions of the hood for the minimum distance between the appliances.

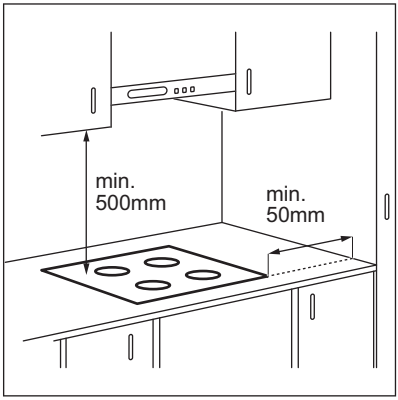

If the appliance is installed above a drawer, the hob ventilation can warm up the items stored in the drawer during the cooking process.

ON-TOP INSTALLATION

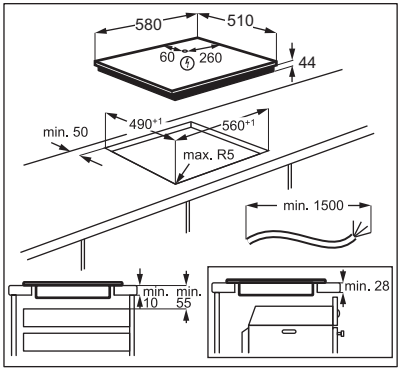

INTEGRATED INSTALLATION

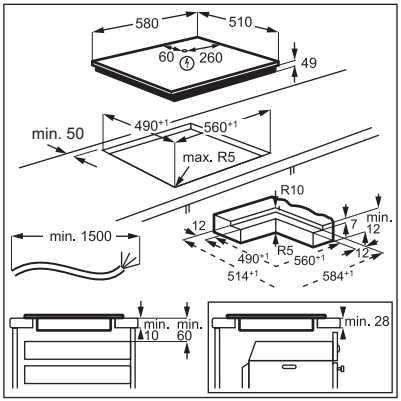

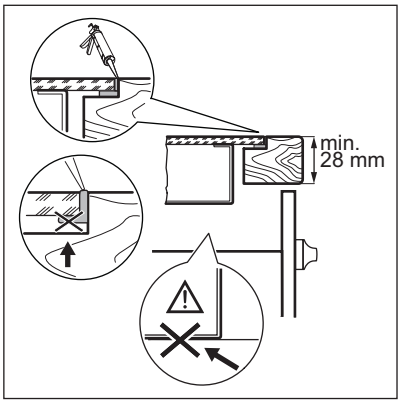

Find the video tutorial "How to install your Electrolux Induction Hob - Worktop installation" by typing out the full name indicated in the graphic below.

YouTube www.youtube.com/electrolux www.youtube.com/aeg

How to install your Electrolux Induction Hob - Worktop installation

Find the video tutorial "How to install your Electrolux induction hob flush installation" by typing out the full name indicated in the graphic below.

YouTube www.youtube.com/electrolux www.youtube.com/aeg

How to install your Electrolux induction hob flush installation

4. PRODUCT DESCRIPTION

4.1 Cooking surface layout

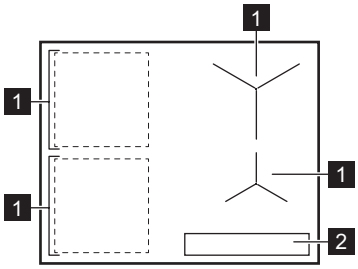

1 Induction cooking zone
2 Control panel

For detailed information on the sizes of the cooking zones refer to "Technical data".

4.2 Control panel layout

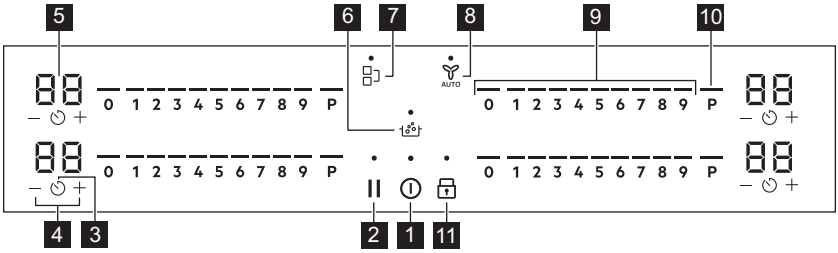

Use the sensor fields to operate the appliance. The displays, indicators and sounds tell which functions operate.

The antiscratch glass surface has a unique finishing texture which may change the way symbols and elements of the user interface appear in various lighting conditions.

	Sensor field	Function	Description
1	⏻	On / Off	To activate and deactivate the appliance.
2	⏸	Pause	To activate and deactivate the function.
3	⏲	Timer	To set the function.
4	+ / −	-	To increase or decrease the time.
5	-	Timer display	To show the time in minutes.
6		SenseBoil®	SenseBoil®. To automatically adjust the temperature of water so that it does not boil over once it reaches the boiling point.
7		Bridge	To activate and deactivate the function.
8	AUTO	Hob²Hood	To activate and deactivate the manual mode of the function.
9	-	Control bar	To set a heat setting.
10	P	PowerBoost	To activate the function.
11		Lock / Child Safety Device	To lock / unlock the control panel.

4.3 Display indicators

Indicator	Description
E + digit	There is a malfunction.
/ /	OptiHeat Control (3 step Residual heat indicator): continue cooking / keep warm / residual heat.

5. BEFORE FIRST USE

⚠ WARNING!

Refer to Safety chapters.

5.1 Power limitation

Power limitation defines how much power is used by the hob in total, within the limits of the house installation fuses.

The hob is set to its highest possible power level by default.

To decrease or increase the power level:

1. Enter the menu: press and hold ⏻ for 3 seconds. Then, press and hold 🔒.
2. Press ⏲ on the front timer until P appears.
3. Press — / + on the front timer to set the power level.
4. Press ⏻ to exit.

Power levels

Refer to “Technical data” chapter.

⚠ CAUTION!

Make sure that the selected power fits the house installation fuses.

⚠ CAUTION!

If the power level is lower than or equal to 2000 W you cannot activate SenseBoil®.

- P73 — 7350 W
- P15 — 1500 W
- P20 — 2000 W
- P25 — 2500 W
- P30 — 3000 W
- P35 — 3500 W
- P40 — 4000 W
- P45 — 4500 W
- P50 — 5000 W
- P60 — 6000 W

6. DAILY USE

⚠ WARNING!

Refer to Safety chapters.

6.1 Activating and deactivating

Press and hold ⏻ to activate or deactivate the hob.

6.2 Pot detection

This feature indicates the presence of cookware on the hob and deactivates the cooking zones if no cookware is detected during a cooking session.

If you put cookware on a cooking zone before you select a heat setting, the indicator above 0 on the control bar appears.

If you remove cookware from an activated cooking zone and set it aside temporarily, the indicators above the corresponding control bar will start blinking. If you do not place the cookware back on the activated cooking zone within 120 seconds, the cooking zone will automatically deactivate.

To resume cooking, make sure to put the cookware back on the cooking zones within the indicated timeout.

6.3 Using the cooking zones

Place the cookware in the centre of the selected zone. Induction cooking zones adapt to the dimension of the bottom of the cookware automatically.

For optimal heat transfer use cookware with bottom diameter similar to the size of the cooking zone (i.e. the maximum cookware diameter value in "Technical data" > "Cooking zones specification"). Make sure that the cookware is suitable for induction hobs. For more information on cookware types refer to "Hints and tips".

The antiscratch glass surface has an unique finishing texture that maximizes scratch resistance. The friction between the cookware and the glass surface may produce noises.

You can cook with large cookware placed on two cooking zones at the same time using Bridge function. The cookware must cover the centres of both zones but not go beyond the area marking. If the cookware is located between the two centres, Bridge function will not be activated.

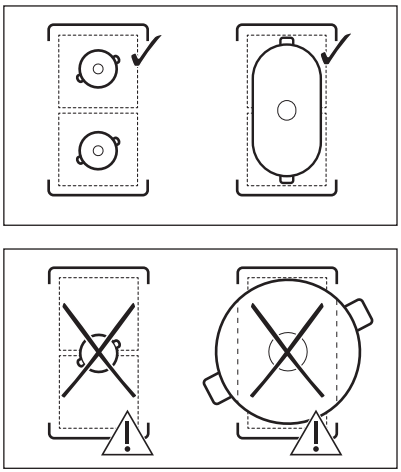

6.4 Heat setting

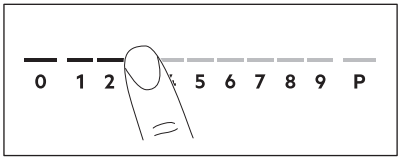

1. Press the desired heat setting on the control bar.

The indicators above the control bar appear up to the selected heat setting level.

2. To deactivate a cooking zone, press 0.

6.5 PowerBoost

This function makes more power available to the induction cooking zones. The function can be activated for the induction cooking zone only for a limited period of time. After this time the induction cooking zone automatically sets back to the highest heat setting.

Refer to “Technical data” chapter.

To activate the function for a cooking zone: touch P.

To deactivate the function: change the heat setting.

6.6 OptiHeat Control (3 step Residual heat indicator)

WARNING!

/ / As long as the indicator is visible, there is a risk of burns from residual heat.

The induction cooking zones produce the heat necessary for the cooking process directly in the bottom of the cookware. The glass ceramic is heated by the heat of the cookware.

The indicators appear when a cooking zone is hot. They show the level of the residual heat for the cooking zones you are currently using:

- continue cooking,

- keep warm,

- residual heat.

The indicator may also appear:
- for the neighbouring cooking zones even if you are not using them,
- when hot cookware is placed on cold cooking zone,
- when the hob is deactivated but the cooking zone is still hot.

The indicator disappears when the cooking zone has cooled down.

6.7 Timer options

Count Down Timer

Use this function to specify how long a cooking zone should operate during a single cooking session.

Set the heat setting for the selected cooking zone and then set the function.

1. Press . 00 appears on the timer display.
2. Press + or — to set the time (00-99 minutes).
3. Press to start the timer or wait 3 seconds. The timer begins to count down.

To change the time: select the cooking zone with and press + or —.

To deactivate the function: select the cooking zone with and press —. The remaining time counts back to 00.

The timer finishes counting down, a signal sounds and 00 blinks. The cooking zone deactivates. Press any symbol to stop the signal and blinking.

Minute Minder

You can use this function when the hob is activated but the cooking zones do not operate. The heat setting shows 00.

1. Press .
2. Press + or — to set the time.

The timer finishes counting down, a signal sounds and 00 blinks. Press any symbol to stop the signal and blinking.

To deactivate the function: press and —. The remaining time counts back to 00.

6.8 Power management

If multiple zones are active and the consumed power exceeds the limitation of the power supply, this function divides the available power between all cooking zones. The hob controls heat settings to protect the fuses of the house installation.

- If the hob reaches the limit of maximum available power (refer to the rating plate), the power of the cooking zones will be automatically reduced.
- The heat setting of the cooking zone selected first is always prioritised. The remaining power will be divided between the other cooking zones according to the order of selection.
- For cooking zones that have a reduced power, the control bar blinks and shows the maximum possible heat settings.
- Wait until the display stops flashing or reduce the heat setting of the cooking zone selected last. The cooking zones will continue operating with the reduced heat setting. Change the heat settings of the cooking zones manually, if necessary.

6.9 SenseBoil®

The function automatically adjusts the temperature of water so that it does not boil over once it reaches the boiling point.

If there is any residual heat (/ /) on the cooking zone you want to use, an acoustic signal sounds and the function does not start.
The function does not work with non-stick cookware.

CAUTION!

Do not use the function with empty cookware.
Do not leave the hob unattended while the function is operating.

1. Place pots filled with 1 - 5 l of cold water on the available cooking zones for which you want to start the function.

If you place one pot on only one cooking zone the function starts automatically.

2. Touch ⏻ to activate the hob.
3. Touch to activate the function.

A blinking indicator above P appears for each cooking zone on which you can presently use the function.

4. Touch anywhere on the slider of the chosen cooking zone.

The function starts.
Once the function starts the indicators above the slider appear and the animation starts running.

ⓘ

If you do not place a pot on any of the cooking zones within 5 seconds, the function deactivates automatically.

When the function reaches the boiling point the hob emits an acoustic signal and the heat setting automatically changes to a default simmering level.

To deactivate the function before the boiling point has been reached, touch or 0.

To deactivate the function after the boiling point has been reached, touch the slider and adjust the heat setting manually.

If you activate Pause or remove the pot the function deactivates.

If you set a Count Down Timer on one of the cooking zones and the set time runs out before the boiling point is reached the function deactivates automatically.

Hints and tips:

- The function is best suited for boiling water and cooking potatoes.
- The function may not work properly for kettles and stovetop espresso pots.
- Fill between half to three quarters of the pot with cold tap water leaving 4 cm from the rim of the pot empty. Do not use less than 1 l or more than 5 l of water. Make sure the total weight of the water (or the water and potatoes) ranges between 1-5 kg.

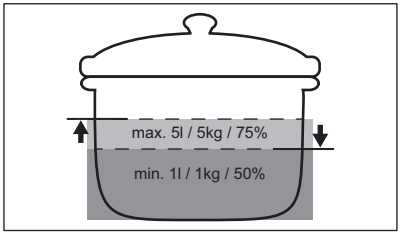

- To achieve the best results cook only whole, unpeeled, medium-sized potatoes. Make sure you do not pack potatoes too tightly.
- During the heat up phase avoid energetic stirring of other pots and parallel cooking processes (such as frying or boiling) on other cooking zones.
- Avoid producing external vibrations (e.g. from using a blender or placing a mobile phone next to the hob) when the function is running.
- Depending on the type of food and cookware you can adjust the heat setting after the boiling point has been reached.
- Add salt once the boiling point has been reached.
- Use a lid to save energy.

6.10 Menu structure

The table shows the basic menu structure.

User settings

Sym-bol	Setting	Possible options
b	Sound	On / Off (--)
P	Power limitation	15 - 73
H	AUTO mode	0 - 6
E	Alarm / error histo-ry	The list of recent alarms / errors.

To enter user settings: press and hold ⏻ for 3 seconds. Then, press and hold 🔒. The settings appear on the timer of the left cooking zones.

Navigating the menu: the menu consists of the setting symbol and a value. The symbol appears on the rear timer and the value appears on the front timer. To navigate

between the settings press ⏲ on the front timer. To change the setting value press + or − on the front timer.

To exit the menu: press ⏻.

OffSound Control

You can activate / deactivate the sounds in the Menu > User settings.

ⓘ
Refer to "Menu structure".

When the sounds are off you can still hear the sound when:

- you touch ⏻,
- the timer comes down,
- you press an inactive symbol.

7. ADDITIONAL FUNCTIONS

7.1 Automatic Switch Off

The function deactivates the hob automatically if:

- all of the cooking zones are deactivated,
- you do not set any heat setting or fan speed setting after the activation of the hob,
- you spill something or put something on the control panel for more than 10 seconds (a pan, a cloth, etc.). A signal sounds and the hob deactivates. Remove the object or clean the control panel.
- the appliance gets too hot (e.g. when a saucepan boils dry). Let the cooking zone cool down before you use the hob again.
- you do not deactivate a cooking zone or change the heat setting. After some time, the hob deactivates.

The relation between the heat setting and the time after which the appliance deactivates:

Heat setting	The hob deactivates after
1 - 2	6 hours
3 - 4	5 hours
5	4 hours
6 - 9	1.5 hours

7.2 Pause

This function sets all operating cooking zones to the lowest heat setting.

When the function operates, ⏻ and ⏸ can be used. All other symbols on the control panels are locked.

The function does not stop the timer functions.

1. **To activate the function**: press ⏸.
The heat setting is lowered to 1.
2. **To deactivate the function**: press ⏸.
The previous heat setting appears.

7.3 Lock

You can lock the control panel while the hob operates. It prevents an accidental change of the heat setting.

Set the heat setting first.

To activate the function: press 🔒.

To deactivate the function: press 🔒 again.

ⓘ
The function deactivates as you deactivate the hob.

7.4 Child Safety Device

This function prevents an accidental operation of the hob.

To activate the function: press ⏻. Do not set any heat setting. Press and hold 🔒 for 3 seconds, until the indicator above the symbol appears. Deactivate the hob with ⏻.

The function stays active when you deactivate the hob. The indicator above is on.

To deactivate the function: press . Do not set any heat setting. Press and hold for 3 seconds, until the indicator above the symbol disappears. Deactivate the hob with .

Cooking with the function activated: press , then press for 3 seconds, until the indicator above the symbol disappears. You can operate the hob. When you deactivate the hob with the function operates again.

7.5 Bridge

The function operates when the pot covers the centres of the two zones. For more information on the correct placement of cookware refer to "Using the cooking zones".
The function does not work while SenseBoil® operates.

This function connects two left side cooking zones and they operate as one.

First set the heat setting for one of the left side cooking zones.

To activate the function: touch . To set or change the heat setting touch one of the control sensors.

To deactivate the function: touch . The cooking zones operate independently.

7.6 Hob²Hood

It is an advanced automatic function which connects the hob to a special hood. Both the hob and the hood have an infrared signal communicator. Speed of the fan is defined automatically on basis of mode setting and temperature of the hottest cookware on the hob. You can also operate the fan from the hob manually.

For most of the hoods the remote system is originally deactivated. Activate it before you use the function. For more information refer to hood user manual.

Operating the function automatically
To operate the function automatically set the automatic mode to H1 – H6. The hob is originally set to H5. The hood reacts whenever you operate the hob. The hob recognizes temperature of the cookware automatically and adjusts the speed of the fan.

Automatic modes

	Automatic light	Boiling[1)]	Frying[2)]
H0	Off	Off	Off
H1	On	Off	Off
H2 **3)**	On	Fan speed 1	Fan speed 1
H3	On	Off	Fan speed 1
H4	On	Fan speed 1	Fan speed 1
H5	On	Fan speed 1	Fan speed 2
H6	On	Fan speed 2	Fan speed 3

1) The hob detects the boiling process and activates fan speed in accordance with automatic mode.
2) The hob detects the frying process and activates fan speed in accordance with automatic mode.
3) This mode activates the fan and the light and does not rely on the temperature.

Changing the automatic mode
1. Deactivate the hob.
2. Press for 3 seconds. The display comes on and goes off.
3. Press for 3 seconds.
4. Press a few times until **H** comes on.
5. Press + of the timer to select an automatic mode.

ⓘ

To operate the hood directly on the hood panel deactivate the automatic mode of the function.

ⓘ

When you finish cooking and deactivate the hob, the hood fan may still operate for a certain period of time. After that time the system deactivates the fan automatically and prevents you from accidental activation of the fan for the next 30 seconds.

Operating the fan speed manually
You can also operate the function manually.

To do that press AUTO when the hob is active. This deactivates automatic operation of the function and allows you to change the fan speed manually. When you press AUTO you raise the fan speed by one. When you reach an intensive level and press AUTO again you will set fan speed to 0 which deactivates the hood fan. To start the fan again with fan speed 1 press AUTO.

ⓘ

To activate automatic operation of the function, deactivate the hob and activate it again.

Activating the light
You can set the hob to activate the light automatically whenever you activate the hob. To do so set the automatic mode to H1 – H6.

ⓘ

The light on the hood deactivates 2 minutes after deactivating the hob.

8. HINTS AND TIPS

⚠ **WARNING!**

Refer to Safety chapters.

8.1 Cookware

ⓘ

For induction cooking zones a strong electro-magnetic field creates the heat in the cookware very quickly.

Use the induction cooking zones with suitable cookware.

- To prevent overheating and improve the performance of the zones, the cookware must be as thick and flat as possible.
- Ensure cookware bases are clean and dry before placing on the hob surface.
- Always be careful no to slide or rub the cookware on the edges and corners of the glass as it may chip or damage the glass surface.

Cookware material

- **correct:** cast iron, steel, enamelled steel, stainless steel, multi-layer bottom (with a correct marking from a manufacturer).
- **not correct:** aluminium, copper, brass, glass, ceramic, porcelain.

Cookware is suitable for an induction hob if:

- water boils very quickly on a zone set to the highest heat setting.
- a magnet pulls on to the bottom of the cookware.

Cookware dimensions

- Induction cooking zones adapt to the dimension of the bottom of the cookware automatically. Refer to "Technical data" > "Cooking zones specification" for correct cookware dimensions. Place the cookware in the centre of the selected cooking zone.
- The efficiency of a cooking zone is related to the diameter of the cookware. For optimal heat transfer use cookware with bottom diameter similar to the size of the cooking zone (i.e. the maximum cookware diameter value in "Technical data" > "Cooking zones specification").
  - Cookware with a diameter smaller than the size of a given cooking zone receives only part of the power

generated by the cooking zone which results in slower heating.
– For both safety reasons and optimal cooking results, do not use cookware larger than indicated in "Cooking zones specification". Avoid keeping cookware close to the control panel during the cooking session. This might impact the functioning of the control panel or accidentally activate hob functions.

ⓘ

Refer to "Technical data".

8.2 Noises during operation

ⓘ

The noises are normal and do not indicate any malfunction. Cookware noises may vary depending on the cookware material and the power level.

Cookware-related noises:

- cracking noise: cookware is made of different materials (a sandwich construction).
- whistling sound: you use a cooking zone with a high power level and the cookware is made of different materials (a sandwich construction).
- humming: you use a high power level.

Hob-related noises:

- clicking: electric switching occurs.
- hissing, buzzing: the fan operates.
- rhythmic sound: cookware is detected.

8.3 Öko Timer (Eco Timer)

To save energy, the heater of the cooking zone deactivates before the count down timer sounds. The difference in the operation time depends on the heat setting level and the length of the cooking operation.

8.4 Simplified cooking guide

The correlation between the heat setting of a zone and its consumption of power is not linear. When you increase the heat setting, it is not proportional to the increase of the consumption of power. It means that a cooking zone with the medium heat setting uses less than a half of its power.

ⓘ

The data in the table is for guidance only.

Heat setting	Use to:	Time (min)	Hints
1	Keep cooked food warm.	as necessary	Put a lid on the cookware.
1 - 2	Hollandaise sauce; melt: butter, chocolate, gelatine.	5 - 25	Mix from time to time.
2	Solidify: fluffy omelettes, baked eggs.	10 - 40	Cook with a lid on.
2 - 3	Simmer rice and milk-based dishes, heat up ready-cooked meals.	25 - 50	Add at least twice as much liquid as rice, mix milk dishes halfway through the procedure.
3 - 4	Stew vegetables, fish, meat.	20 - 45	Add a few tablespoons of water. Check the water amount during the process.
4 - 5	Steam potatoes and other vegetables.	20 - 60	Cover the bottom of the pot with 1-2 cm of water. Check the water level during the process. Keep the lid on the pot.

Heat setting	Use to:	Time (min)	Hints
4 - 5	Cook larger quantities of food, stews and soups.	60 - 150	Up to 3 l of liquid plus ingredients.
6 - 7	Gentle fry: escalope, veal cordon bleu, cutlets, rissoles, sausages, liver, roux, eggs, pancakes, doughnuts.	as neces-sary	Turn over when needed.
7 - 8	Heavy fry, hash browns, loin steaks, steaks.	5 - 15	Turn over when needed.
9	Boil water, cook pasta, sear meat (goulash, pot roast), deep-fry chips.		
P	Boil large quantities of water. PowerBoost is activated.		

8.5 Hints and tips for Hob²Hood

When you operate the hob with the function:

- Protect the hood panel from direct sunlight.
- Do not spot halogen light on the hood panel.
- Do not cover the hob control panel.
- Do not interrupt the signal between the hob and the hood (e.g. with the hand, a cookware handle or a tall pot). See the picture.

The hood pictured below is for illustration purpose only.

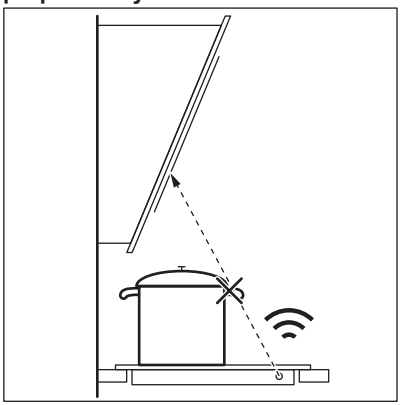

Other remotely controlled appliances may block the signal. Do not use any such appliances near to the hob while Hob²Hood is on.

Cooker hoods with the Hob²Hood function
To find the full range of cooker hoods which work with this function refer to our consumer website. The Electrolux cooker hoods that work with this function must have the symbol AUTO.

9. CARE AND CLEANING

WARNING!
Refer to Safety chapters.

9.1 General information

- Clean the hob after each use.
- Always use cookware with a clean base.

- For both daily cleaning of the glass surface and the post-installation cleaning and removal of any residual glue, use only a mildly abrasive cleaning milk and an anti-scratch, delicate sponge. Depending on the degree of soiling, clean the glass surface with small circular movements and moderate pressure. Wipe the glass surface dry with a microfibre cloth.

⚠ WARNING!

Do not use the classic yellow and green sponge as the aluminium particles on its hard layer may damage and discolour the glass.

ⓘ

Using cleaning tools different than the recommended ones will not be effective and may damage or discolour the glass surface.

- Always use a scraper recommended for hobs with a glass surface. Use the scraper only as an additional tool for cleaning the glass after the standard cleaning procedure.

⚠ WARNING!

Do not use knives or any other sharp, metal tools to clean the glass surface.

9.2 Cleaning the glass surface of the hob

- **Remove immediately:** melted plastic, plastic foil, salt, sugar and food with sugar, otherwise, the dirt can cause damage to the hob. Take care to avoid burns. Use a special hob scraper on the glass surface at an acute angle and move the blade on the surface.
- **Remove when the hob is sufficiently cool:** limescale rings, water rings, fat stains, shiny metallic discoloration. Clean the hob with a mildly abrasive cleaning milk and an anti-scratch, delicate sponge (see General information). After cleaning, wipe the hob dry with a microfibre cloth.
- **Persistent marks and stains:** apply moderate pressure and scrub the surface with an anti-scratch, delicate sponge (see General information) and a mildly abrasive cleaning milk until the stains are no longer visible.

10. TROUBLESHOOTING

⚠ WARNING!

Refer to Safety chapters.

10.1 What to do if...

Problem	Possible cause	Remedy
You cannot activate or operate the hob.	The hob is not connected to an electrical supply or it is connected incorrectly.	Check if the hob is correctly connected to the electrical supply.
	The fuse is blown.	Make sure that the fuse is the cause of the malfunction. If the fuse is blown again and again, contact a qualified electrician.

Problem	Possible cause	Remedy
	You did not set the heat setting for 60 seconds.	Activate the hob again and set the heat setting in less than 60 seconds.
	You touched 2 or more sensor fields at the same time.	Touch only one sensor field.
	Pause operates.	Refer to "Pause".
	There is water or fat stains on the control panel.	Clean the control panel.
You can hear a constant beep noise.	The electrical connection is incorrect.	Disconnect the hob from the electrical supply. Ask a qualified electrician to check the installation.
You cannot select the maximum heat setting for one of the cooking zones.	The other zones consume the maximum available power. Your hob works properly.	Reduce the heat setting of the other cooking zones connected to the same phase. Refer to "Power management".
An acoustic signal sounds and the hob deactivates. An acoustic signal sounds when the hob is deactivated.	You put something on one or more sensor fields.	Remove the object from the sensor fields.
The hob deactivates.	You put something on the sensor field ⏻.	Remove the object from the sensor field.
Residual heat indicator does not come on.	The zone is not hot because it operated only for a short time or the sensor is damaged.	If the zone operated sufficiently long to be hot, speak to an Authorised Service Centre.
Hob²Hood does not work.	You covered the control panel.	Remove the object from the control panel.
	You use a very tall pot which blocks the signal.	Use a smaller pot, change the cooking zone or operate the hood manually.
The control panel becomes hot to the touch.	The cookware is too large or you put it too close to the control panel.	Put large cookware on the rear zones, if possible.
There is no sound when you touch the panel sensor fields.	The sounds are deactivated.	Activate the sounds. Refer to "Daily use".
The indicator above the symbol 🔒 comes on.	Child Safety Device or Lock operates.	Refer to "Child Safety Device" and "Lock".
The control bar blinks.	There is no cookware on the zone or the zone is not fully covered.	Put cookware on the zone so that it fully covers the cooking zone.
	The cookware is unsuitable.	Use cookware suitable for induction hobs. Refer to "Hints and tips".
	The diameter of the bottom of the cookware is too small for the zone.	Use cookware with correct dimensions. Refer to "Technical data".
Heating up takes a long time.	Cookware is too small and receives only a part of the power generated by the cooking zone.	For optimal heat transfer use cookware with bottom diameter similar to the size of the cooking zone (i.e. the maximum cookware diameter value in "Technical data" > "Cooking zones specification").

Problem	Possible cause	Remedy
F and 1 appear simultaneously.	The power is too low due to unsuitable cookware or an empty pot.	Use the appropriate type of cookware. Refer to "Hints and Tips" and "Technical Data". Do not activate any zone with an empty pot on it.
F and 2 appear simultaneously.	The pot is empty or contains some liquid other than water, e.g. oil.	Avoid using the function with liquids other than water.
F and 3 appear simultaneously.	There is too much or too little water in the pot. You boiled some food other than water and potatoes. The boiling point was moved in time and SenseBoil® could not work properly.	Only boil water and potatoes with the use of SenseBoil®. Refer to "Hints and Tips".
You hear a beep sound, the indicators above blink and SenseBoil® does not start.	None of the cooking zones is ready to be used with SenseBoil®. There is some residual heat on the cooking zones you want to choose or they are still in use.	Finish your previous cooking activities and choose a free cooking zone without any residual heat.
SenseBoil® does not work.	The power level of the hob is too low.	Set the power level to a higher value. Make sure that the selected power fits the house installation fuses. Refer to "Before first use" > " Power limitation".
E and a number come on.	There is an error in the hob.	Deactivate the hob and activate it again after 30 seconds. If E comes on again, disconnect the hob from the electrical supply. After 30 seconds, connect the hob again. If the problem continues, speak to an Authorised Service Centre.

10.2 If you cannot find a solution...

If you cannot find a solution to the problem yourself, contact your dealer or an Authorised Service Centre. Give the data from the rating plate. Make sure, you operated the hob correctly. If not the servicing by a service technician or dealer will not be free of charge, also during the warranty period. The information about guarantee period and Authorised Service Centres are in the guarantee booklet.

11. TECHNICAL DATA

11.1 Rating plate

Model KIS62453IZ
Typ 61 B4A 01 AA
Induction 7.35 kW
Ser.Nr. .....
ELECTROLUX

PNC 949 599 425 00
220 - 240 V / 400 V 2N, 50 Hz
Made in: Germany
7.35 kW

11.2 Cooking zones specification

Cooking zone	Nominal power (maximum heat setting) [W]	PowerBoost [W]	PowerBoost maximum duration [min]	Cookware diameter [mm]
Left front	2300	3200	10	125 - 210
Left rear	2300	3200	10	125 - 210
Right front	1400	2500	4	125 - 145
Right rear	1800	2800	10	145 - 180

The power of the cooking zones can be different in some small range from the data in the table. It changes with the material and dimensions of the cookware.

For optimal heat transfer and cooking results use cookware with bottom diameter similar to the size of the cooking zone (i.e. the maximum cookware diameter value in the table). Do not use cookware larger than the diameter of the cooking zone.

12. ENERGY EFFICIENCY

12.1 Product Information according to EU Ecodesign Regulation

Model identification		KIS62453IZ
Type of hob		Built-In Hob
Number of cooking zones		4
Heating technology		Induction
Diameter of circular cooking zones (Ø)	Right front Right rear	14.5 cm 18.0 cm
Length (L) and width (W) of non circular cooking zone	Left front	L 21.95 cm W 21.8 cm
Length (L) and width (W) of non circular cooking zone	Left rear	L 21.95 cm W 21.8 cm
Energy consumption per cooking zone (EC electric cooking)	Left front Left rear Right front Right rear	188.9 Wh/kg 188.9 Wh/kg 180.8 Wh/kg 176.9 Wh/kg
Energy consumption of the hob (EC electric hob)		183.9 Wh/kg

IEC / EN 60350-2 - Household electric cooking appliances - Part 2: Hobs - Methods for measuring performance.

The energy measurements referring to the cooking area are identified by the markings of the respective cooking zones.

12.2 Energy saving

You can save energy during everyday cooking if you follow the hints below.

- When you heat up water, use only the amount you need.
- If it is possible, always put the lids on the cookware.

- Put the cookware directly in the centre of the cooking zone.
- Use the residual heat to keep the food warm or to melt it.

12.3 Product Information for power consumption and maximum time to reach applicable low power mode

Power consumption in off mode	0.3 W
Maximum time needed for the equipment to automatically reach the applicable low power mode	2 min

13. ENVIRONMENTAL CONCERNS

Recycle materials with the symbol . Put the packaging in relevant containers to recycle it. Help protect the environment and human health by recycling waste of electrical and electronic appliances. Do not dispose of appliances marked with the symbol with the household waste. Return the product to your local recycling facility or contact your municipal office.

electrolux.com

867385768-A-222024

