Electrolux

electrolux.com/register



EW9W216BW

EN User Manual | **Washer Dryer**

Welcome to Electrolux! Thank you for choosing our appliance.



In our drive to be sustainable, we are reducing paper assets and provide full user manuals online. Access your full user manual at **electrolux.com/manuals**



Get usage advice, brochures, troubleshooting, service and repair information at **electrolux.com/support**



Buy accessories, consumables, and original spare parts for your appliance at **electrolux.com/shop**

Subject to change without notice.

CONTENTS

1. SAFETY INFORMATION.....2
2. SAFETY INSTRUCTIONS.....6
3. PRODUCT DESCRIPTION.....8
4. TECHNICAL DATA.....9
5. INSTALLATION.....9
6. CONTROL PANEL.....15
7. DIAL AND BUTTONS.....16
8. PROGRAMMES.....19
9. BEFORE FIRST USE.....24
10. SETTINGS.....24
11. DAILY USE.....25
12. DAILY USE - WASHING&DRYING OR DRYING ONLY.....27
13. FLUFF IN THE FABRICS.....28
14. CARE AND CLEANING.....29
15. TROUBLESHOOTING.....36
16. CONSUMPTION VALUES.....40
17. QUICK GUIDE.....42
18. ENVIRONMENTAL CONCERNS.....46

1. ⚠ SAFETY INFORMATION



Before beginning the installation and use of this appliance, carefully read the supplied instructions.
The manufacturer is not responsible for any injuries or damage that are the result of incorrect installation or usage.
Always keep the instructions in a safe and accessible location for future reference.

1.1 Children and vulnerable people safety

⚠ **WARNING!**

Risk of suffocation, injury or permanent disability.

- This appliance can be used by children aged from 8 years and above and persons with reduced physical, sensory or mental capabilities or lack of experience and knowledge if they have been given supervision or instruction concerning the use of the appliance in a safe way and understand the hazards involved.
- Children between 3 and 8 years of age and persons with very extensive and complex disabilities shall be kept away from the appliance unless continuously supervised.
- Children of less than 3 years of age should be kept away from the appliance unless continuously supervised.
- Children should be supervised to ensure that they do not play with the appliance.
- Keep all packaging away from children and dispose of it appropriately.
- Keep detergents away from children.
- Keep children and pets away from the appliance when the door is open.
- If the appliance has a child safety device, it should be activated.
- Children shall not carry out cleaning and user maintenance of the appliance without supervision.

1.2 General Safety

- This appliance is for washing and drying domestic-type machine-washable and dryable laundry only.
- Do not use the dryer function if laundry has been soiled with industrial chemicals.
- This appliance is designed for single household domestic use in an indoor environment.
- This appliance may be used in offices, hotel guest rooms, bed & breakfast guest rooms, farm guest houses and other

similar accommodation where such use does not exceed (average) domestic usage levels.
- Do not change the specification of this appliance.
- The appliance shall be installed as a freestanding product or below the kitchen worktop if space margins permit.
- Do not install the appliance behind a lockable door, a sliding door or a door with a hinge on the opposite side, that would prevent the appliance door from being fully open.
- Connect the mains plug to the mains socket only at the end of the installation process. Make sure that the mains plug is accessible after installation.
- The ventilation opening in the base must not be covered by a carpet, mat, or any floor covering.
- WARNING: The appliance must not be supplied through an external switching device, such as a timer, or connected to a circuit that is regularly switched on and off by a utility.
- Ensure good air ventilation in the room where the appliance is installed to avoid the backflow of unwanted gases into the room from appliances burning gas or other fuels, including open fires.
- Exhaust air must not be discharged into a flue which is used for exhausting fumes from any appliances burning gas or other fuels.
- The operating water pressure at the water entry point from the outlet connection must be between 0.5 bar (0.05 MPa) and 10 bar (1.0 MPa).
- The appliance maximum load is 10.0 kg. Do not exceed the maximum load of each programme (refer to the "Programmes" chapter).
- The appliance must be connected to the water mains using the new supplied hose sets, or other new hose sets supplied by the Authorised Service Centre.
- Old hose sets must not be reused.
- If the mains power supply cable is damaged, it must be replaced by the manufacturer, its Authorised Service Centre or similarly qualified persons to avoid an electrical hazard.

- Wipe away lint or packaging debris that has accumulated around the appliance.
- Do not run the appliance without filters. Clean the lint filter before or after each use.
- Items that have been soiled with substances such as vegetable or mineral oil, acetone, alcohol, petrol, kerosene, spot removers, turpentine, waxes and wax removers should be washed separately with an extra amount of detergent before being dried in the washer dryer.
- Do not use the appliance if items have been soiled with industrial chemicals.
- Do not dry unwashed items in the wash dryer.
- Items such as foam rubber (latex foam), shower caps, waterproof textiles, and rubber backed articles and clothes, or pillows fitted with foam rubber pads should not be dried in the washer dryer.
- Fabric softeners, or similar products, should only be used as specified by the product manufacturer's instructions.
- Remove all objects from items that could be a source of fire ignition such as lighters or matches.
- WARNING: Never stop the washer dryer before the end of the drying cycle unless all items are quickly removed and separated so that residual heat can dissipate.
- The final part of the washer dryer cycle takes place without heat (cool down cycle) to ensure that items reach a temperature that will not cause damage to them.
- Do not use high pressure water sprays and/or steam to clean the appliance.
- Clean the appliance with a moist cloth. Use only neutral detergents. Do not use abrasive products, abrasive cleaning pads, solvents or metal objects.
- Before any maintenance operation, deactivate the appliance and disconnect the mains plug from the socket.

2. SAFETY INSTRUCTIONS

2.1 Installation

ⓘ

The installation must comply with relevant national regulations.

- Follow the installation instructions supplied with the appliance.
- Do not install or use the appliance where the temperature can be less than 5°C or higher than 35 °C.
- Always keep the appliance vertical when it is being moved.
- To make sure the compressor works properly, wait 6 hours after the installation before using the appliance.
- Make sure that there is air circulation between the appliance and the floor.
- Remove all the packaging and the transit bolts.
- The floor area on which the appliance is to be installed must be flat, stable, heat resistant and clean.
- Keep the transit bolts in a safe place. If the appliance is to be moved in the future they must be reattached to lock the drum to prevent an internal damage.
- Always take care when moving the appliance as it is heavy. Always use safety gloves and enclosed footwear.
- Do not install or use a damaged appliance.
- Do not install the appliance where the appliance door cannot be fully opened.
- Adjust the feet to have the necessary space between the appliance and the flooring.
- When the appliance is in its permanent position, check if it is levelled correctly with the aid of a spirit level. If it is not, adjust the feet accordingly.

2.2 Electrical Connection

⚠ **WARNING!**

Risk of fire and electric shock.

- WARNING: This appliance is designed to be installed / connected to a grounding connection in the building.
- Always use a correctly installed shockproof socket.
- Do not use multi-plug adapters and extension cables.
- Do not pull the mains cable to disconnect the appliance. Always pull the mains plug.
- Do not touch the mains cable or the mains plug with wet hands.

2.3 Water Connection

- The inlet water shall not exceed 25 °C.
- Do not cause damage to the water hoses.
- Before connection to new pipes, pipes not used for a long time, where repair work has been carried out or new devices fitted (water meters, etc.), let the water flow until it is clean and clear.
- Ensure that there are no visible water leaks during and after the first use of the appliance.
- Do not use an extension hose if the inlet hose is too short. Contact the Authorised Service Centre for the replacement of the inlet hose.
- When unpacking the appliance, It is possible to see water flowing from the drain hose. This is due to the testing of the appliance with the use of water in the factory.
- You can extend the drain hose to maximum 400 cm. Contact the Authorised Service Centre for the other drain hose and the extension.
- Make sure that there is access to the tap after the installation.

2.4 Use

⚠ **WARNING!**

Risk of injury, electric shock, fire, burns or damage to the appliance.

- Do not put flammable products or items that are wet with flammable products in, near or on the appliance.
- Do not touch the glass door while a programme operates. The glass can get hot.
- Do not dry damaged (torn, frayed) items that contain padding or fillings.

- If laundry has been washed with a stain remover, carry out an additional rinse cycle before starting a drying cycle.
- Make sure that all metal objects are removed from the laundry.
- Dry only fabrics that are suitable to dry in the appliance. Follow the cleaning instruction on the item label.
- Do not sit or stand on the open door of the appliance.
- Do not dry dripping wet clothes in the appliance.
- Do not let hot items to touch the plastic parts of the appliance.
- Remove a detergent ball (if used) before starting a drying programme.
- Do not use a detergent ball if setting a non-stop programme.

2.5 Compressor

⚠ WARNING!

Risk of damage to the appliance.

- The compressor and its system in the washer-dryer is filled with the special agent which is free from fluoro-chlorohydrocarbons. This system must stay tight. The damage of the system can cause a leakage.

2.6 Service

- To repair the appliance contact the Authorised Service Centre. Use original spare parts only.
- Please note that self-repair or non-professional repair can have safety consequences and might void the guarantee.
- The following spare parts are available for at least 10 years after the model has been discontinued: motor and motor brushes, transmission between motor and drum, pumps, shock absorbers and springs, washing drum, drum spider and related ball bearings, heaters and heating elements, including heat pumps, piping and related equipment including hoses, valves, filters and aquastops, printed circuit boards, electronic displays, pressure switches, thermostats and sensors, software and firmware including reset software, door, door hinge and seals, other seals, door locking assembly, plastic peripherals such as detergent dispensers. The duration may be longer in your country. For further information, please visit our website.
- Please note that some of these spare parts are only available to professional repairers, and that not all spare parts are relevant for all models.
- Concerning the lamp(s) inside this product and spare part lamps sold separately: These lamps are intended to withstand extreme physical conditions in household appliances, such as temperature, vibration, humidity, or are intended to signal information about the operational status of the appliance. They are not intended to be used in other applications and are not suitable for household room illumination.

2.7 Disposal

- Disconnect the appliance from the mains electrical and water supplies.
- Cut off the mains electrical cable close to the appliance and dispose of it.
- Remove the door catch to prevent children or pets from becoming trapped in the drum.
- Dispose of the appliance in accordance with local requirements for the disposal of Waste Electrical and Electronic Equipment (WEEE).

3. PRODUCT DESCRIPTION

3.1 Appliance overview

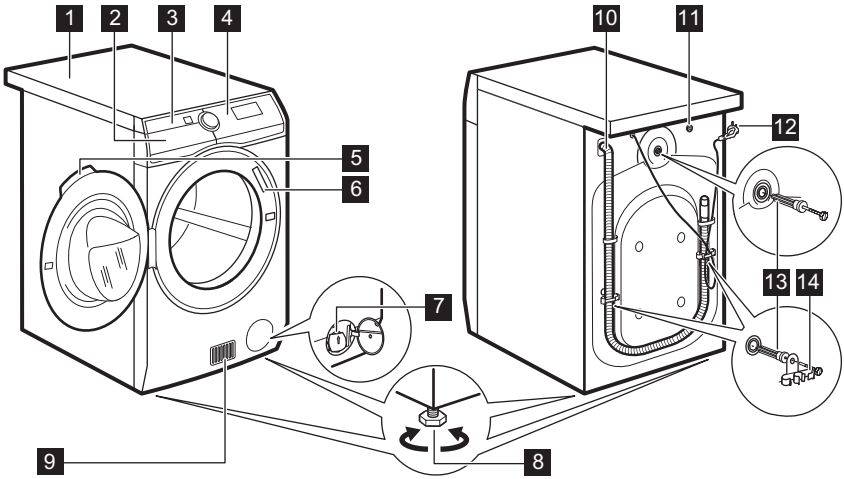

1 Worktop
2 Detergent dispenser
3 Air filter(s)
4 Control panel
5 Door handle
6 Rating plate
7 Drain pump filter
8 Feet for levelling the appliance
9 Airflow slots
10 Water drain hose
11 Water inlet valve
12 Mains cable
13 Transit bolts
14 Hose supports

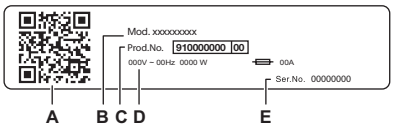

The rating plate reports:
A. QR code
B. Model name
C. Product number
D. Electrical ratings
E. Serial number

Scan the **QR code** on the appliance to register your product and get the most out of it.

- Access your appliance details, documentation and articles on how to use the best features (User Manual also available at **electrolux.com/manuals**)
- Get usage advice, troubleshooting, service and repair information (also available at **electrolux.com/support**)
- Buy accessories, Consumable and Original Spare parts for you appliance (also available at **electrolux.com/shop**)

4. TECHNICAL DATA

Dimension	Width/ Height/ Total depth	59.7 cm /87.0 cm /66.0 cm
Electrical connection	Voltage Overall power Fuse Frequency	230 V 2100 W 10 A 50 Hz
Level of protection against ingress of solid particles and moisture ensured by the protective cover, except where the low voltage equipment has no protection against moisture		IPX4
Water supply **1)**		Cold water
Water supply pressure	Minimum Maximum	0.5 bar (0.05 MPa) 10 bar (1.0 MPa)
Ambient temperature	Minimum Maximum	5 °C 35 °C
Maximum wash load	Cotton Synthetics Wool	10.0 kg 4.0 kg 1.5 kg
Maximum dry load	Cotton Synthetics Wool	6 kg 4 kg 1 kg
This product contains HFC - R134a/GWP1430 0.14 kg fluorinated gas hermetically sealed.		

1) Connect the water inlet hose to a water tap with a 3/4" thread.

5. INSTALLATION

WARNING!

Refer to Safety chapters.

5.1 Unpacking

WARNING!

Remove all the packaging and the transit bolts before installing the appliance.

WARNING!

As you will put down the appliance on the rear side, **wait about 6 hours before you use it**. This time is necessary to enable the compressor to work properly.

WARNING!

Use the gloves.

1. Remove the external film. If necessary, use a cutter.

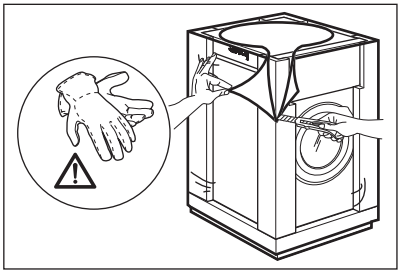

2. Remove the cardboard top and the other packaging materials.

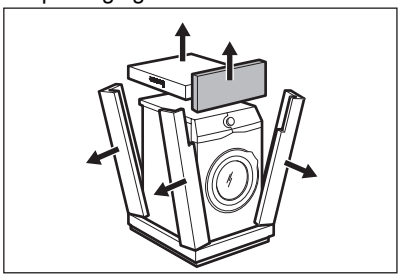

3. Remove the internal film.

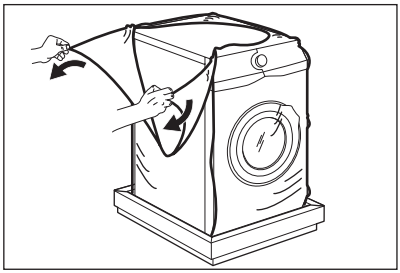

4. Open the door, remove the piece from the door seal and all the items from the drum.

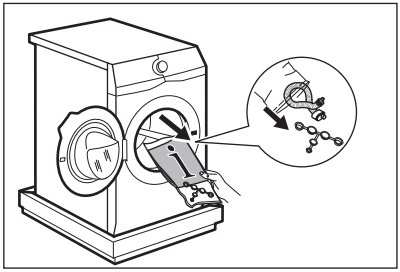

5. Carefully put the appliance down on its rear side.

6. Put the front packaging element on the floor under the appliance.

Make sure not to damage the hoses.

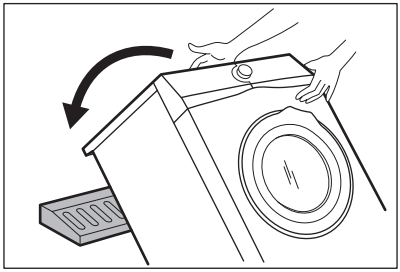

7. Remove the protection from the bottom.

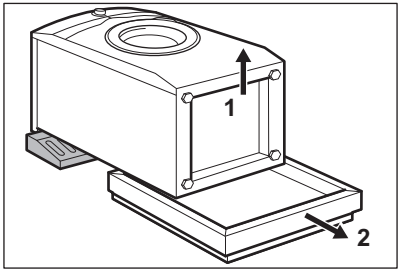

8. Pull up the appliance in vertical position.

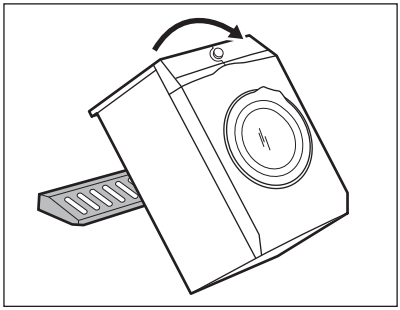

9. Remove the power supply cable and the drain hose from the hose holders.

It is possible to see water flowing from the drain hose. This is due to the testing with water of the appliance in factory.

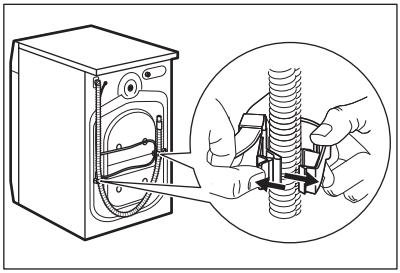

10. Remove the three bolts.

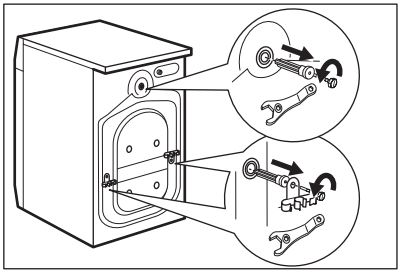

11. Pull out the plastic spacers.

12. Put the plastic caps, that you find in the user manual bag, in the holes.

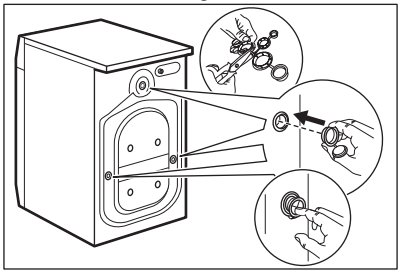

ⓘ

We recommend that you keep the packaging and the transit bolts for any movement of the appliance.

5.2 Installation under a counter

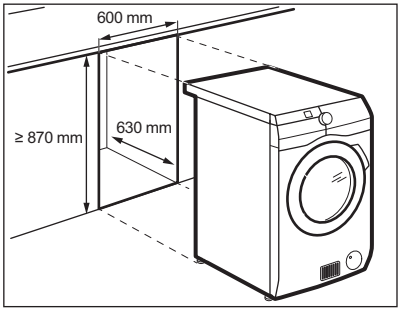

The appliance can be installed as freestanding or below the kitchen counter with correct space (see picture).

⚠ **CAUTION!**

Do not install the appliance inside a sealed hollow!
Make sure that there is air circulation throw the bottom of the furniture.

⚠ **CAUTION!**

To assure free air circulation under the appliance, do not attach the sound barriers (if available).

5.3 Positioning and levelling

1. Install the appliance on a flat hard floor.

ⓘ

Make sure that carpets do not stop the air circulation below the appliance.
Make sure that the appliance does not touch the wall or other units.

2. Loosen or tighten the feet to adjust the level.

⚠ **WARNING!**

Do not put cardboard, wood or equivalent materials below the appliance feet to adjust the level.

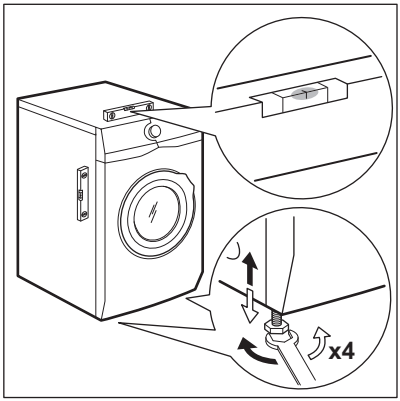

The appliance must be level and stable.

A correct adjustment of the appliance level prevents the vibration, noise and the movement of the appliance when in operation.

When the appliance is installed on a plinth, use the accessory described in chapter 'Accessories'. Read carefully the instructions supplied with the appliance and with the accessory.

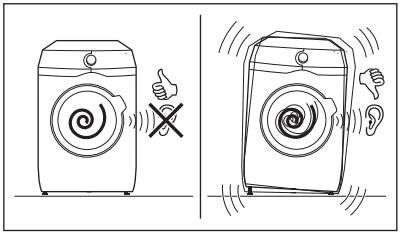

5.4 The inlet hose

1. Connect the water inlet hose to the back of the appliance if needed. Usually, it is already installed at the factory.

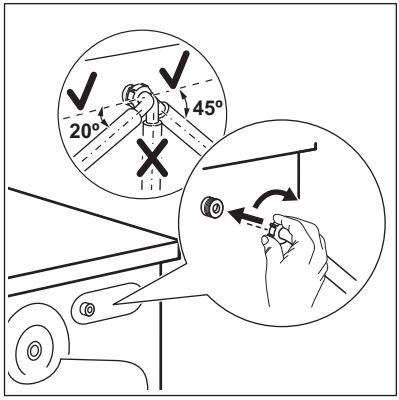

2. Position it toward left or right depending on the position of the tap. Make sure that the inlet hose is not in vertical position.
3. If necessary, loose the ring nut to set it in the correct position
4. Connect the water inlet hose to the cold water tap with 3/4" thread.

Some model can contain inlet hose with water stop device. It prevents any leaks in the hose because of its natural ageing. The sector in the window shows this fault A. If this occurs, close the water tap and contact the authorized service center for information to replace the hose.

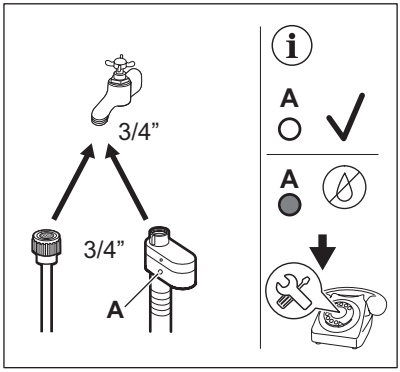

⚠ WARNING!

The inlet water shall not exceed 25 °C.

⚠ CAUTION!

Make sure that there are no leaks from the couplings.

ⓘ

Do not use an extension hose if the inlet hose is too short. Contact the service centre for information on inlet hose replacement.

5.5 Water-stop device

The inlet hose has a water stop device. This device prevents water leaks in the hose because of its natural ageing.

The red sector in the window «**A**» shows this fault.

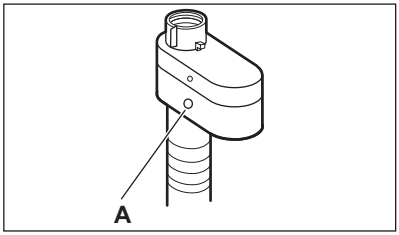

If this occurs, close the water tap and contact the authorized service centre to replace the hose.

5.6 Water drainage

The drain hose should be positioned at a height of not less than 60 cm and not more than 100 cm from the floor.

ⓘ

You can extend the drain hose to maximum 400 cm. Contact the authorized service centre to buy the other drain hose and the extension.

It is possible to connect the drain hose in different ways:

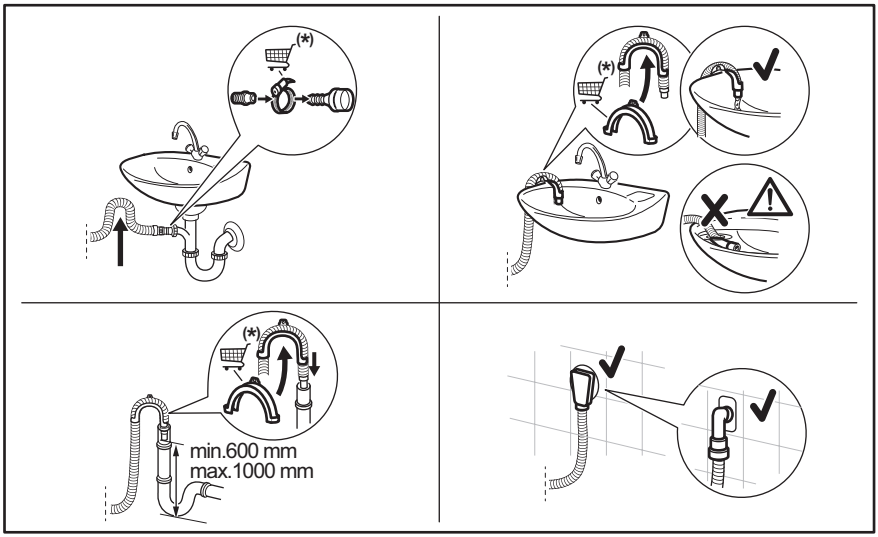

(*) Subject to change without notice.

- Connect the drain hose to the spigot and tighten it with a clamp.
- Position the hose directly to a built-in drain pipe in the room wall and tighten it with a clamp.
- Without the plastic hose guide, to a sink spigot - put the drain hose in the spigot and tighten it with a clamp.
- To a stand pipe with vent hole - insert the drain hose directly into a drain pipe or stand pipe.
- The drain hose can be bent into U shape and put around the plastic guide. On the edge of a sink - fasten the guide to the water tap or to the wall.

ⓘ

Make sure that the drain hose makes a loop to prevent particles going into the appliance from the sink.

ⓘ

Make sure that the plastic guide cannot move when the appliance drains and the drain hose end is not immersed in the water. There may be a return of dirty water into the appliance.
Buy accessories from authorised supplier.

ⓘ

The end of the drain hose must always be ventilated , i.e. the inner diameter of the drain pipe (min. 38 mm - min. 1.5") must be larger than the external diameter of the drain hose.

5.7 Electrical connection

At the end of installation you can connect the mains plug to the mains socket.

The rating plate and the 'Technical Data' chapter indicate the necessary electrical ratings. Make sure that they are compatible with the mains power supply.

Check that your domestic electrical installation can take the maximum load required, also taking into account any other appliances may also be in use.

Connect the appliance to an earthed socket.

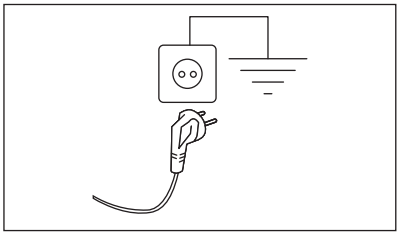

The power supply cable must be easily accessible after installing the appliance.

For any electrical work required to install this appliance, contact our Authorised Service Centre.

The manufacturer does not accept any responsibility for damage or injury through failure to comply with the above safety precaution.

6. CONTROL PANEL

6.1 Control panel description

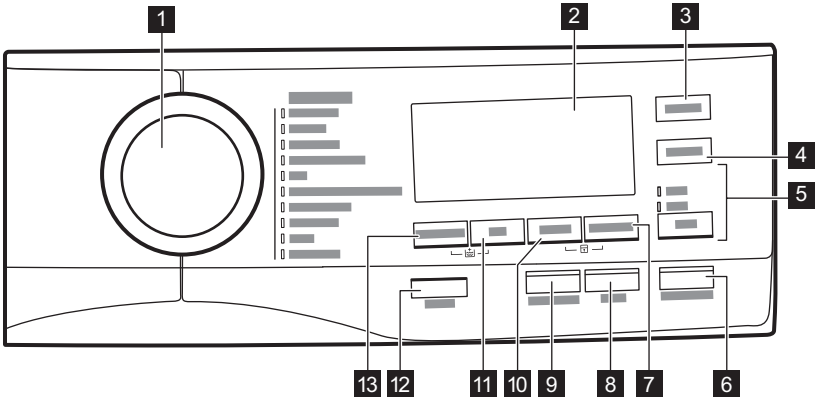

1. Programme dial
2. Display
3. Drying time touch button (Asciugatura a Tempo)
4. Drying level touch button (Asciugatura automatica)
5. Washing and drying mode touch button (MODALITÀ)
   - Lavaggio
   - Asciugatura
6. Start and pause touch button (Avvio/ Pausa)
7. Delay Start touch button (Partenza Ritardata)
8. Time Saving touch button (Time Manager)
9. Anti-crease touch button (Antipiega)
10. Anti-stain and prewash touch button (Macchie plus/Prelavaggio)
11. Spin reduction touch button (Centrifuga)
12. On/Off push button (On/Off)
13. Temperature touch button (Temperatura)

6.2 Display

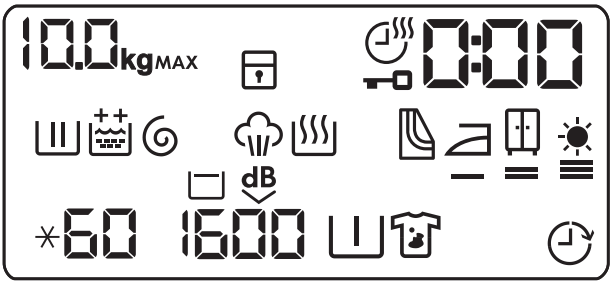

10.0kg	Laundry weight indicator.
MAX	Maximum laundry indicator.
000 %	Detergent quantity indicator.
	Child safety lock indicator.
	Drying time indicator.
	Door locked indicator.
0:00	The digital indicator can show: • Programme duration. • Delay time. • Cycle end. • Warning code.
	Washing phase indicator.
	Rinsing phase indicator.
	The permanent Extra Rinse option: • - one additional rinse. • - two additional rinses.
	Spin and drain phase indicator.
	Steam phase indicator.

	Drying phase indicator.
	Indicator for the cleaning of air filters.
	Iron drying indicator.
	Cupboard drying indicator.
	Extra drying indicator.
60	Temperature indicator.
1600	Spin speed indicator.
	Rinse hold indicator.
dB	Extra silent indicator.
	Pre-wash indicator.
	Stain indicator.
	Delay start indicator.

7. DIAL AND BUTTONS

7.1 On/Off

Pressing this button for a few seconds allows to activate or deactivate the appliance. Two different tunes sound while switching the appliance on or off.

As the Stand-by function automatically deactivates the appliance to decrease the energy consumption in a few cases, you may need to activate the appliance again.

The default selected programme, at machine switch on, is always the Eco 40-60 programme, also after wake up from standby.

For more details, refer to Stand-by paragraph in Daily Use chapter.

7.2 Introduction

The options/functions are not selectable with all washing programmes. Check the compatibility between options/functions and washing programmes in the "Programme Chart". An option/function can exclude another one, in this case the appliance doesn't allow you to set the incompatible options/functions together. Make sure the screen and touch buttons are always clean and dry.

7.3 Temperatura

When you select a washing programme, the appliance automatically proposes a default temperature.

Touch this button repeatedly until the desired temperature value appears on the display.

When the display shows the indicators ✳ and – –, the appliance does not heat the water.

7.4 Centrifuga

When you set a programme, the appliance automatically selects the default spin speed.

Touch this button repeatedly to:

- **Change the spin speed.**

> ⓘ
> The display shows only the spin speeds available for the set programme.

- **Activate the Rinse Hold option** .
  The water of the last rinse is not drained out to prevent the fabrics from creasing. The washing programme ends with water in the drum and the final spin phase is not performed.
  The display shows the indicator ▭.
  The drum turns regularly to reduce creasing.
  The door stays locked. The drum turns regularly to reduce creasing. You must drain the water to unlock the door.
  Touch Avvio/Pausa button: the appliance performs the spinning phase and drains the water.
- **Activate the Extra silent option.**
  All spinning phases (intermediate spin and final spin) are suppressed and the programme ends with water in the drum. This helps to reduce creasing.
  As the programme is very quiet, it is suitable for use at night time when cheaper electricity tariffs are available. In some programmes the rinses are performed with more water.
  The display shows the indicator dB.
  The door stays locked. The drum turns regularly to reduce creasing. You must drain the water to unlock the door.
  Touch the Avvio/Pausa button: the appliance performs only the draining phase.

> ⓘ
> The appliance empties the water out automatically after approximately 18 hours.

7.5 Macchie plus/Prelavaggio

Press this button repeatedly to activate one of the two options.

The relevant indicator goes on in the display.

- **Macchie plus**
  Select this option to add an anti-stain phase to a programme in order to treat heavily soiled or stained laundry with stain remover.
  Pour the stain remover into compartment ▯. The stain remover will be added in the appropriate phase of the washing programme.

> ⓘ
> This option can increase the programme duration.

> ⓘ
> This option is not available with a temperature lower than 40 °C.

- **Prelavaggio** ▯
  Use this option to add a prewash phase at 30 °C before the washing phase.
  This option is recommended for heavily soiled laundry, especially if containing sand, dust , mud and other solid particles.

> ⓘ
> This option can increase the programme duration.

> ⓘ
> These two options cannot be set together.

7.6 Partenza Ritardata

With this option you can delay the start of a programme in a more convenient time.

Tap on the button repeatedly to set the required delay. The time increases by steps

of 30 minutes up to 90' and from 2 hours up to 20 h.

After starting the cycle by the means of the Avvio/Pausa button, the display shows the selected delay time and the appliance begins the countdown.

7.7 Time Manager

With this option you can decrease the programme duration.

- If your laundry is normally or lightly soiled, it may be advisable to shorten the washing programme. Touch this button **once** to decrease the duration.
- In case of smaller load, touch this button **twice** to set an extra quick programme.

On the display the programme duration is adjusted accordingly.

When this button is set, the led above the button is on.

> This option can also be used to shorten the steam programme duration.

7.8 Antipiega

This option adds a short anti-crease phase at the end of the programme.

This phase reduces fabric creasing and facilitates the fabric ironing.

When this option is set, the led above the button is on and then blinks during anti-crease phase.

> This option can increase the programme duration.

By touching any button the anti-crease movements stop and the door unlocks.

To interrupt the anti-crease phase, you can also:

- Press the On/Off button for a few seconds to activate or the deactivate the appliance.
- Turning the programme dial in another position.

7.9 Asciugatura a Tempo

In the programme where it is selectable, touch this button to set the time that suits the fabrics you have to dry (refer to "Timed drying" table). The display shows the set value.

Each time you touch this button the time value increases by 5 minutes.

> You cannot set all time values for different types of fabrics.

7.10 Asciugatura automatica

Touch this button to set one of 3 automatic dryness levels proposed by the appliance.

On the display the relevant dryness indicator goes on:

- **Iron dry**: laundry to be ironed.
- **Cupboard dry**: laundry to be put in store.
- **Extra dry**: laundry to be fully dried.

> You can not set all automatic levels for each type of fabrics.

7.11 MODALITÀ

Thanks to this button, a cycle can perform:

- **Only washing** : Lavaggio indicator is on.
- **Washing and drying** : Lavaggio and Asciugatura indicators are on.
- **Only drying** : Asciugatura indicator is on.

7.12 Avvio/Pausa

Touch the Avvio/Pausa button to start, pause the appliance or interrupt a running programme.

8. PROGRAMMES

8.1 Programme Chart

ⓘ

Additional programmes and settings are available downloading the APP.

Programme Default temperature Temperature range	Reference spin speed Spin speed range	Maximum load	Programme description
Eco 40-60 (Wash only mode) 40 °C **1)** **2)**	1600 rpm 1600 rpm - 400 rpm	10.0 kg	**White cotton and fast-coloured cotton**. Normally soiled items.
Eco 40-60 + Cupboard dry level (Wash & Dry mode) 40 °C **3)** **2)**	1600 rpm 1600 rpm -1000 rpm	10.0 kg	
Eco 40-60 + Cupboard dry level (Dry only mode)	-	6 kg	**White cotton and fast-coloured cotton**.
Cotoni 40 °C 95 °C - Cold	1600 rpm 1600 rpm - 400 rpm	10.0 kg	**White cotton and coloured cotton**. Normally, heavily and lightly soiled items.
Sintetici 30 °C 60 °C - Cold	1200 rpm 1200 rpm - 400 rpm	4.0 kg	**Synthetic items or mixed fabric items**. Normally soiled items.
Delicati 30 °C 40 °C - Cold	1200 rpm 1200 rpm - 400 rpm	2.0 kg	**Delicate fabrics such as acrylics, viscose and mixed fabrics requiring gentler washing**. Normally and lightly soiled items.
Seta 30 °C	1000 rpm 1000 rpm - 400 rpm	0.5 kg	Special programme for **silk and mixed synthetic items**.
Lana/A mano 40 °C 40 °C - Cold	1200 rpm 1200 rpm - 400 rpm	1.5 kg	**Machine washable wool, hand washable wool and other fabrics** with «hand washing» care symbol **4)**.

Programme Default temperature Temperature range	Reference spin speed Spin speed range	Maxi-mum load	Programme description
NonStop 3h 3kg 30 °C 40 °C - 30 °C	1200 rpm	3.0 kg	**Mixed fabrics (cotton and synthetic items)**. Complete programme to wash and dry laundry loads up to 3 kg in one go. It only lasts 3 hours. Also, the indicator appears on the display.

Steam programme with FreshScent System

Steam programme can be used for reducing wrinkles and odours[5)] of garments that just need to be refreshed, avoiding washing. The fabric fibres are relaxed and afterwards ironing becomes effortless. When the programme is completed, quickly remove the laundry from the drum[6)]. Steam programmes do not perform any hygienic cycle. Do not set this programme with the following type of items:

- Items that are not suitable for tumble drying.
- Items with label "Dry clean only".

Electrolux fragrance. If you use this special gentle fragrance, your laundry will scent as just washed. Read carefully the instructions supplied with the fragrance. Reduce the fragrance dosage when treating smaller load. By means of the Rapido button, you can reduce the programme duration when treating items labeled to be washed at low temperature.

DO NOT:

- Tumble dry the garments treated with fragrance. Its benefit would evaporate.
- Use the fragrance with different purposes than those here described.
- Use the fragrance on new garments. New garments may contain residual finishing compounds which are not compatible with it.

The fragrance is available on **Electrolux** web shop or by authorised dealer.

Vapore FreshScent	-	1.0 kg	**Cottons, Synthetics, Delicates.** Short and gentle steam programme to refresh even your very delicate garments, including very delicate garments with sequins, lace etc. When treating smaller loads, the programme duration can be further reduced by means of the Rapido option. **WARNING!** Do not use this programme with wool and garments labelled as dry-clean only.
Risciacquo	1600 rpm 1600 rpm - 400 rpm	10.0 kg	To rinse and spin the laundry. **All fabrics**, except woollens and very delicate fabrics. Reduce the spin speed accordingly to the type of laundry.

Programme Default temperature Temperature range	Reference spin speed Spin speed range	Maximum load	Programme description
Centrifuga/Scarico	1600 rpm 1600 rpm - – – –	10.0 kg	**All fabrics, except woollens and delicate fabrics**. To spin the laundry and to drain the water in the drum.

1) According to Commission Regulation EU 2019/2023. This programme at default temperature and spin speed, in washing only mode, with rated capacity 10.0 kg is able to clean normally soiled cotton laundry declared to be washable at 40 °C or 60 °C, together in the same cycle.

ⓘ

For the reached temperature in the laundry, the programme duration and other data, please refer to 'Consumption Values' chapter.
The most efficient programmes in terms of energy consumption are generally those that perform at lower temperatures and longer duration.

2) The temperature of this programme is not visible on the display and it is automatically set.

3) According to Commission Regulation EU 2019/2023. This programme at default temperature and spin speed, in washing and drying mode, with rated capacity 6 kg and with Cupboard dry level performs the wash and dry cycle able to clean normally soiled cotton laundry declared to be washable at 40 °C or 60 °C, together in the same cycle and, after drying phase, the laundry can be immediately stored in a cupboard.

4) During this cycle the drum rotates slowly to ensure a gentle wash. It can seem that the drum doesn't rotate or doesn't rotate properly, but this is normal for this programme.

5) Steam programme doesn't remove particularly intense odour.

6) After the steam treatment the laundry can be humid. Hang items out for a few minutes.

Programme options compatibility

Programme / Options	Eco 40-60	Cotoni	Sintetici	Delicati	Seta	Lana/A mano	NonStop 3h 3kg	Vapore FreshScent	Risciacquo	Centrifuga/Scarico
Centrifuga	■	■	■	■	■	■			■	■
Rinse Hold	■	■	■	■		■			■	
dB Extra Silent		■	■	■						
– – – No Spin										■ 1)

Programme / Options	Eco 40-60	Cotoni	Sintetici	Delicati	Seta	Lana/A mano	NonStop 3h 3kg	Vapore FreshScent	Risciacquo	Centrifuga/Scarico
Extra Risciacquo		■	■	■			■		■	
Prelavaggio		■	■							
Macchie plus **2)**		■	■							
Partenza Ritardata	■	■	■	■	■	■	■	■	■	■
Time Manager **3)**		■	■	■				■		
Antipiega		■	■	■					■	
Asciugatura a Tempo	■	■	■	■	■	■				
Asciugatura automatica	■ **4)**	■								

1) If you set No Spin option, the appliance only drains the water.

2) This option is not available with temperature lower than 40 °C.

3) If you set the shortest duration, we recommend that you decrease the load size. It is possible to fully load the appliance, however the washing results can be less satisfactory.

4) Iron Dry is not available with this programme.

8.2 Woolmark Premium Wool Care - Blue



- The wool wash cycle of this machine has been tested and approved by The Woolmark Company for the washing of wool garments labelled as “hand wash” provided that the products are washed according to the instructions on the garment label and those issued by the manufacturer of this washing machine. M1230.
- The wool drying cycle of this machine has been tested and approved by The Woolmark Company. The cycle is suitable to dry wool garments which are labelled “hand wash” provided that the garments are washed in a Woolmark endorsed hand washing cycle and dried according to the instructions issued by the manufacturer of this washing machine. M1399.

8.3 Time Dry suggested settings

Dryness Level	Type of fabric	Load (kg)	Spin speed (rpm)	Suggested duration (mins)
Extra Dry For towelling materials	**Cottons and Linen** (bathrobes, bath towels, etc)	6	1600	280 - 300
		4	1600	170- 190
		2	1600	120 - 130
	Denim (jeans, resistant garments such as denim workwear)	4	1200	230 - 250
		2	1200	140 - 160
Cupboard Dry For items to be stored	**Cottons and Linen** (bathrobes, bath towels, etc)	6	1600	270 - 290
		4	1600	160 - 180
		2	1600	110 - 120
	Synthetics and mixed fabrics (jumpers, blouses, underwear, household and bed linen)	4	1200	170 - 190
		2	1200	100 - 120
	Delicates (acrylics, viscose and delicate mixed fabrics)	2	1200	140 - 160
		1	1200	70 - 90
	Wool (woollen jumpers)	1	1200	90 - 110
	Outdoor sporting garments (outdoor clothing, technical, sport fabrics, waterproof and breathable jackets, shell jackets)	2	1200	140 - 160
		1	1200	90 - 110
	Denim (denim garments, jeans)	4	1200	220 - 240
		2	1200	130 - 150

Dryness Level	Type of fabric	Load (kg)	Spin speed (rpm)	Suggested duration (mins)
	Seta (silk garments and very delicate items)	0.5	1000	60 - 80
	Piumini (a single down jacket)	2	1200	140 - 160
		1	1200	90 - 110
	Capi Sportivi (Mixed fabric sportswear)	4	1200	120 - 140
		2	1200	90 - 110
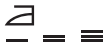 **Iron Dry** Suitable for ironing	**Cottons and Linen** (sheets, tablecloths, shirts, etc)	6	1600	160 - 180
		4	1600	100 - 120
		2	1600	50 - 60

9. BEFORE FIRST USE

During installation or before first use you may observe some water in the appliance. This is a residual water left in the appliance after a full functional test in the factory to ensure the appliance is delivered to customers in perfect working order and is no cause for concern.

1. Make sure that all transit bolts have been removed from the appliance.
2. Make sure that the electrical power is available and the water tap is open.
3. Pour 2 litres of water into the detergent compartment marked by II.

This action activates the drain system.

4. Pour a small quantity of detergent into the compartment marked by II.
5. Set and start a programme for cotton at the highest temperature without any laundry in the drum.

This removes all possible dirt from the drum and the tub.

10. SETTINGS

10.1 Setting

FUNCTIONS	KEY COMBINATION	DESCRIPTION
Child lock	Macchie plus/Prelavaggio-Partenza Ritardata	With this option you can prevent that the children play with the control panel. Touch key combinations until the indicator  **comes on/goes off** on the display.

FUNCTIONS	KEY COMBINATION	DESCRIPTION
Acoustic signals	Partenza Ritardata-Rapido	With this option you can activate or deactivate the acoustic signals. Touch key combinations simultaneously for about 6 seconds. If you deactivate the acoustic signals, they continue operate when the appliance has a malfunction.
Extra Risciacquo	Temperatura -Centrifuga	With this option you can permanently have one or two extra rinses when you set a new programme. Touch key combinations for about 2 seconds: 1. once to add one extra rinse. 2. twice to add two extra rinses. 3. three times to remove extra rinses

11. DAILY USE

⚠ WARNING!

Refer to Safety chapters.

11.1 Filling the detergent and additives

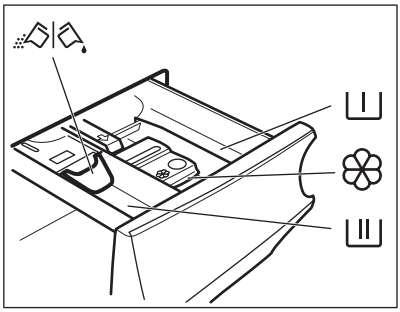

Compartment for prewash phase, soak programme or stain remover.

II Compartment for washing phase.

Compartment for liquid additives.

MAX Maximum level for quantity of liquid additives.

Flap for powder or liquid detergent.

ⓘ

Always follow the instructions that you find on the packaging of the detergent products, but we recommend that you do not exceed the maximum indicated level (**MAX**). This quantity will however guarantee the best washing results.

ⓘ

After a washing cycle, if necessary, remove any detergent residue from the detergent dispenser.

11.2 Check the position of the flap

1. Pull out the detergent dispenser until it stops.
2. Press the lever down to remove the dispenser.
3. To use powder detergent, turn the flap up.
4. To use liquid detergent, turn the flap down.

With the flap in the position DOWN:

- Do not use gelatinous or thick liquid detergents.
- Do not put more liquid detergent than the limit shown on the flap.
- Do not set the prewash phase.
- Do not set the delay start function.

5. Measure out the detergent and the fabric conditioner.
6. Carefully close the detergent dispenser.

Make sure that the flap does not cause a blockage when you close the drawer.

11.3 Additional information about daily use

The SensiCare System load detection

After touching the Avvio/Pausa button the SensiCare starts the laundry load detection to achieve perfect washing results in the minimum possible time. After about 15 minutes the display shows the new programme duration that could increase or decrease.

The SensiCare detection is carried out with complete washing programmes only and is not available with some programmes..

Starting a programme

Touch the Avvio/Pausa button to start the programme. The related indicator stops flashing and stays on. The programme starts, the door is locked. The display shows the indicator .

Starting a programme with delay start

1. Touch the Partenza Ritardata button repeatedly until the display shows the desired delay time.
2. Touch the Avvio/Pausa button. The appliance door locks and starts the countdown of the delay start. When the countdown is completed, the programme starts automatically.

Interrupting a programme and changing the options

1. When the programme is running, you can change only some options. Touch the Avvio/Pausa button.
2. Change the options. The given information in the display changes accordingly.
3. Touch the Avvio/Pausa button again. The washing programme continues.

Cancelling a running programme

Press the On/Off button to cancel the programme and to deactivate the appliance. Press again to activate the appliance.

Opening the door - adding garments

1. Touch the Avvio/Pausa button. The indicator goes off.
2. Open the appliance door. If necessary, add or remove the items.
3. Close the door and touch the Avvio/Pausa button. The programme or the delay start continues.

Draining water out after end of cycle

If you have chosen a programme or an option that does not empty out the water of the last rinse, you must remember to drain it:

1. If necessary, touch the Centrifuga button to decrease the spin speed proposed by the appliance.
2. Touch the Avvio/Pausa button.
3. When the programme is completed and the door locked indicator goes off, you can open the door.
4. Press the On/Off button to deactivate the appliance.

Stand-by function

The Stand-by function automatically deactivates the appliance to decrease the energy consumption.

If you set a programme or an option that ends with water in the drum, the Stand-by function **doesn't deactivate** the appliance to remind you to drain the water.

12. DAILY USE - WASHING&DRYING OR DRYING ONLY

⚠ WARNING!
Refer to Safety chapters.

ⓘ
This appliance is an automatic washer dryer.

12.1 Washing&Drying or Drying only

Preparation to drying

1. Press the On/Off button to activate the appliance.

ⓘ
In case of a drying-only programme, the display does not show the maximum load and the SensiCare estimation is deactivated.

2. Load the laundry and turn the programme dial to the programme suitable for the items to dry.
3. Tap on the MODALITÀ button once to set a washing and drying programme; Tap it twice to exclude washing and perform drying only.

ⓘ
When drying a big amount of laundry, to have good drying performances, make sure that the laundry itself is not rolled up and that is uniformly distributed in the drum.

Automatic Non-Stop programme

The appliance is equipped with the NonStop 3h - 3kg programme, an automatic one-go programme where it is not necessary to set the Asciugatura mode.

To run this programme:

1. Press the On/Off button for some seconds to activate the appliance.
2. Set the NonStop 3h - 3kg programme by means of the programme dial.
3. Touch the Avvio/Pausa button to start the programme.

Non-automatic wash&dry programmes

In some washing programmes, you can combine Lavaggio and Asciugatura mode for running a complete wash&dry programme. Press the On/Off button for some seconds to activate the appliance. Turn the programme dial to the desired washing programme, set the desired options, if there are available and change spin or temperature if necessary. Touch the MODALITÀ button once to activate also the drying function. The Lavaggio and Asciugatura indicators come on. Open the door and load the laundry. Touch the Avvio/Pausa button to start the programme.

ⓘ
When drying a large laundry load, make sure that the garments are not rolled up and that are uniformly distributed in the drum.

ⓘ
At the beginning of the drying cycle (3 - 5 minutes), a slightly higher noise can be heard. This is caused by the compressor and it is quite normal for compressor powered appliances such as refrigerators, freezers and so on.

Washing and Drying - Automatic levels

1. Tap on the Asciugatura automatica button repeatedly until the display shows the required dryness level:

   a. **Iron dry**: for cotton items;

   b. **Cupboard dry**: for cotton and synthetic items;

   c. **Extra dry**: for cotton items.

The time value on the display is the duration of both cycles washing and drying or only drying in case of no washing cycle.

To have a good drying by using less energy and in a shorter time, the appliance does not let you set a too low spin speed for the items to be washed and dried.

2. Touch button Avvio/Pausa to start the programme. The SensiCare estimation starts.

Washing and/or Timed Drying

1. Tap on the button Asciugatura a Tempo repeatedly to set the desired time value.

The minimum timed drying is 10 minutes. Each time you tap on this button the time value increases by 5 minutes.

2. Touch the Avvio/Pausa to start the programme. The SensiCare estimation starts.

End of the drying programme

At the end of the drying programme, the appliance stops automatically. The indicator of button Avvio/Pausa goes off. The door locked goes off.

Press the button On/Off for some seconds to deactivate the appliance.

After some minutes from the end of the programme, the energy saving function deactivates the appliance automatically. Remember to clean the drum, the seal and the inside of the door with a wet cloth.

The indicator appears on the display to remind you to clean the air filter (refer to 'Cleaning the air filters' in 'Care and cleaning' chapter).

13. FLUFF IN THE FABRICS

During the washing and/or drying phase, some types of fabric, (sponge, wool, sweatshirt) could release fluff.

The released fluff could stick to the fabrics during the next cycle.

This inconvenient increases with technical fabrics.

To prevent the fluff in your laundry:

- Do not wash dark fabrics after you washed and dried light coloured fabrics (hand towel, wool, sweatshirt) and the contrary.
- Dry this type of fabrics at open air when they are washed the first time.
- Clean the drain filter.
- After the drying phase, clean the empty drum, the gasket and the door with a wet cloth.

To remove the fluff inside the drum, proceed as follows:

- Empty the drum.
- Clean the drum, the gasket and the door with a wet cloth.
- Set the rinse programme.
- Simultaneously press the Macchie plus/ Prelavaggio and the Antipiega buttons until the display shows **CLE** to activate the cleaning function.
- Touch the Avvio/Pausa button to start the programme.

If the appliance is frequently used, carry out the **CLE** programme regularly.

14. CARE AND CLEANING

⚠ WARNING!

Refer to Safety chapters.

14.1 Periodic cleaning schedule

Periodic cleaning helps to extend the life of your appliance.

After each cycle, keep the door and the detergent dispenser slightly open to get air circulation and dry the humidity inside the appliance.

If the appliance is not used for a long time: close the water tap and unplug the appliance.

Indicative periodic cleaning schedule:

Descaling	Twice a year
Maintenance wash	Once a month
Clean door seal	Every two months
Clean drum	Every two months
Remove fluff inside the drum	Twice a month 1)
Clean detergent dispenser	Every two months
Primary air filter	After each cycle
Secondary air filter	When the indicator flashes
Clean drain pump filter	Twice a year
Clean the inlet hose and the valve filter	Twice a year

1) Refer to "Fluff in the fabrics" chapter.

14.2 Removing foreign objects

ⓘ

Before running your cycle, make sure that pockets are empty and all loose elements are tied up.

Remove any foreign objects (such as metal clip, buttons, coins, etc) that you may find in the door seal, the filters and the drum. Refer to "Door seal with double lip trap", "Cleaning the drum", "Cleaning the drain pump" and "Cleaning the inlet hose and the valve filter" paragraphs. If necessary, please contact the Authorised Service Centre.

14.3 External cleaning

Clean the appliance with mild soap and warm water only. Fully dry all the surfaces.

Do not use a scouring pads or any scratching material.

⚠ CAUTION!

Do not use alcohol, solvents or chemical products.

⚠ CAUTION!

Do not clean the metal surfaces with chlorine-based detergent.

14.4 Descaling

ⓘ

If the water in your area is hard or medium hard, we recommend that you use a water softener for washing machines (descaling occasionally).

Regularly examine the drum to check for limescale.

ⓘ

Always follow the instructions that you find on the packaging of the product.

14.5 Maintenance wash

The repeated and prolonged use of low temperature programmes can cause detergent deposits, fluff residues, bacterial growth inside the drum and the tub.

To eliminate these deposits and hygienize the inner part of the appliance, run a maintenance wash regularly (at least once a month).

Run a cotton programme with the highest temperature with a small quantity of powder detergent or, if available, run the Machine Clean programme.

14.6 Door seal

This appliance is designed with a **self cleaning draining system**, allowing light fluff fibers that fall off the clothes to be drained out with the water. Regularly examine the seal and if necessary clean as described in the following diagram. Coins, buttons, other small items can be recovered at the end of the cycle.

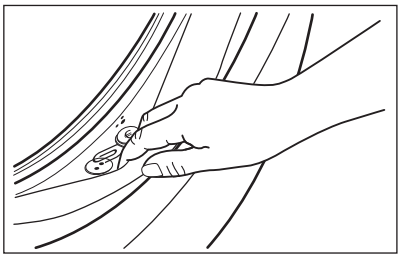

Clean it when needed, using ammonia cream cleanser agent without scratching the seal surface.

ⓘ

Always obey the instructions that you find on the packaging of the product.

14.7 Cleaning the drum

Regularly examine the drum to prevent unwanted deposits.
Clean the drum with special products for stainless steel.

ⓘ

Always follow the instructions that you find on the packaging of the product.
Do not clean the drum with acidic descaling products, scouring products containing chlorine or iron or steel.

For a thorough clean:

1. Clean the drum with special products for stainless steel.
2. Run a short cotton programme at high temperature with empty drum and with a small quantity of powder detergent or, if available, run the Machine Clean programme.

14.8 Cleaning the detergent dispenser

To prevent possible deposits of dried detergent or clotted fabric softener and/or formation of mould in the detergent dispenser drawer, every two months carry out the following cleaning procedure how explained in the following diagrams:

1. Open the drawer. Press the catch downwards as indicated in the picture and pull it out.

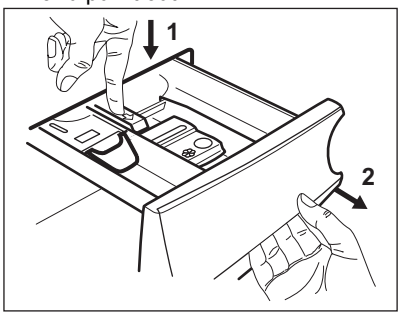

2. Remove the top part of the additive compartment to aid cleaning. Make sure that all detergent residue is removed from the upper and lower part of the recess. Use a small brush to clean the recess.

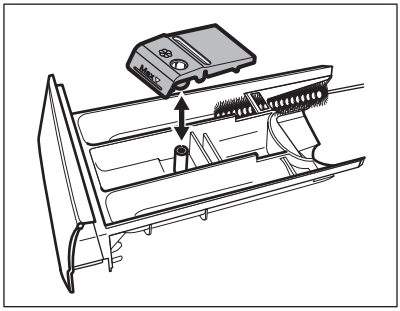

3. Flush the detergent drawer out under running warm water to remove any traces of accumulated detergent. After cleaning, replace the top part in its position.

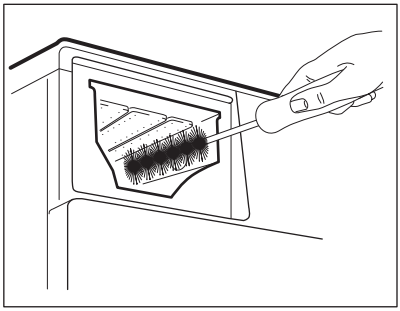

4. Insert the detergent drawer into the guide rails and close it. Run the rinsing programme without any clothes in the drum.

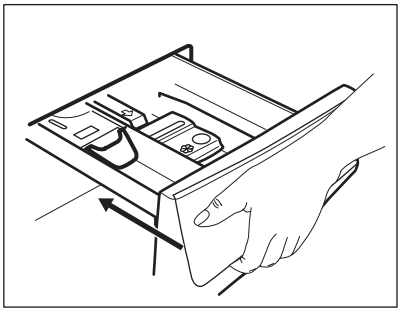

14.9 Cleaning the air filters

The air filters collect the fluff. The fluff normally occurs when the clothes are dried in a washer-dryer.

- At the end of each drying cycle in the display the indicator is on to advise to clean the **primary air filter** (see pictures from 1 to 5). The acoustic signal operates.
- Occasionally the indicator may flash to remind you that both air filters should be cleaned: the **primary air filter** and the **secondary air filter** (for secondary filter, see pictures from 6 to 8). The acoustic signal operates.

To have best drying performances clean the air filters regularly. Clogged filters make cycles longer and increase the energy consumption.

⚠ WARNING!

Do not use water to clean the filters to avoid that plastic fibres flow in the water ambient. Throw the lint in a dustbin.

1. Push the hook to open the primary air filter.

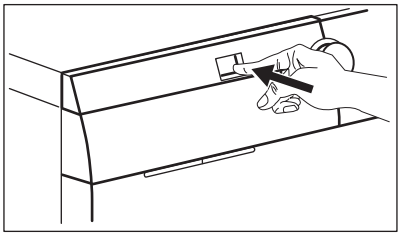

2. Pull the primary air filter out.

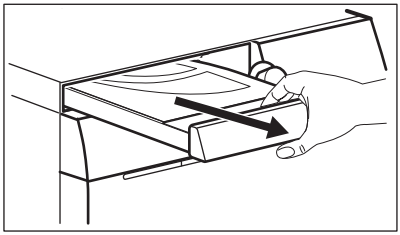

3. Open the primary air filter cover by pulling it upwards.

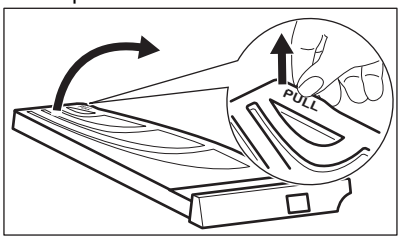

4. Clean the primary air filter with your hand and, if necessary, with a vacuum cleaner. Throw the lint in a dustbin.

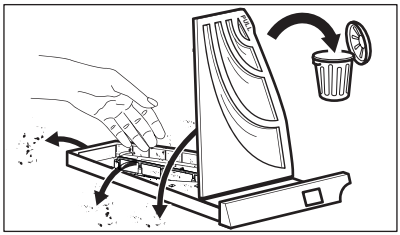

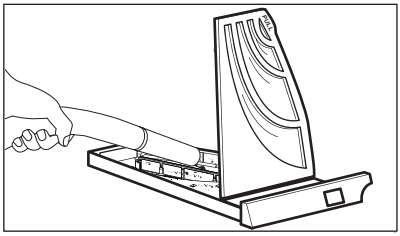

5. Close the primary air filter cover.

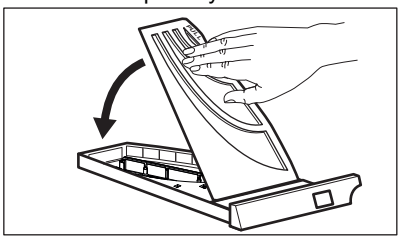

6. Pull the secondary filter out.

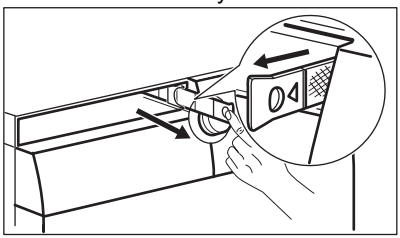

7. Clean the secondary air filter with your hand and, if necessary, with a vacuum cleaner. Throw the lint in a dustbin.

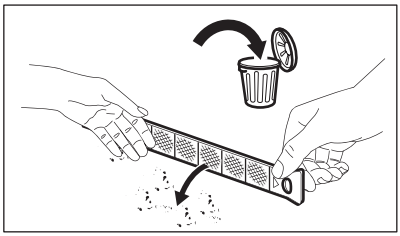

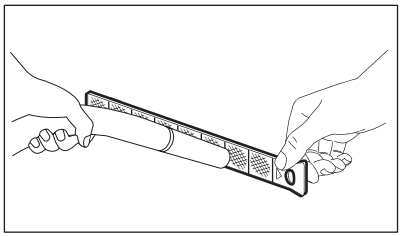

8. Reinsert the secondary air filter.

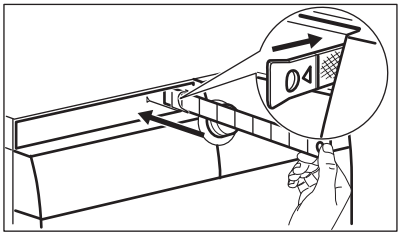

9. Reinsert the primary air filter and close it firmly.

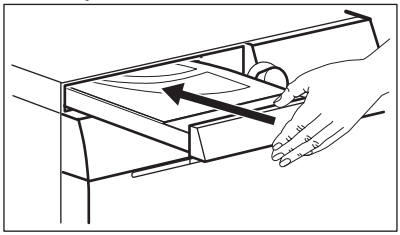

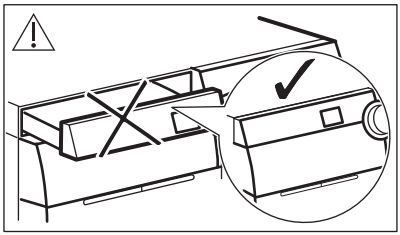

⚠ WARNING!

The primary air filter recess must not be blocked by any object.

ⓘ

If you only wash the laundry with your washer-dryer, it is normal to find some humidity in the primary air filter.

14.10 Cleaning the drain pump filter

⚠ WARNING!

Disconnect the mains plug from the mains socket.

ⓘ

Regularly check the drain pump filter and make sure that it is clean.

Clean the drain pump filter if:

- The appliance does not drain the water.
- The drum does not turn.
- The appliance makes an unusual noise because of the blockage of the drain pump.
- The display shows the alarm code E20.

⚠ WARNING!

- Do not remove the filter while the appliance operates.
- Do not clean the pump if the water in the appliance is hot. Wait until the water cools down

⚠ WARNING!

Each time you carry out the special programme **CLE** to remove fluff, clean the drain filter afterwards.

Proceed as described in following diagrams to clean the pump filter:

1. Open the pump cover.

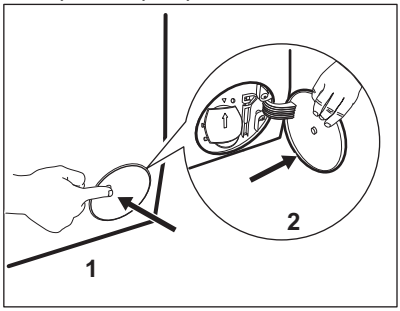

2. Place a suitable bowl below the drain pump access to collect the water that flows out.
3. Open the chute downwards. Always keep a rag nearby to dry up any water spillages when removing the filter.

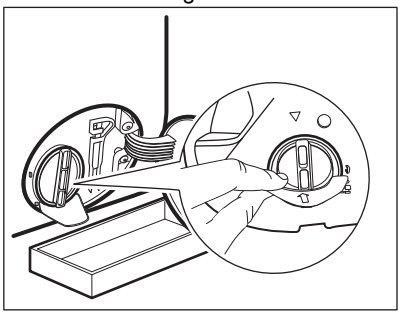

4. Turn the filter 180 degrees in anti-clockwise direction to open it, without removing. Let the water flow out.

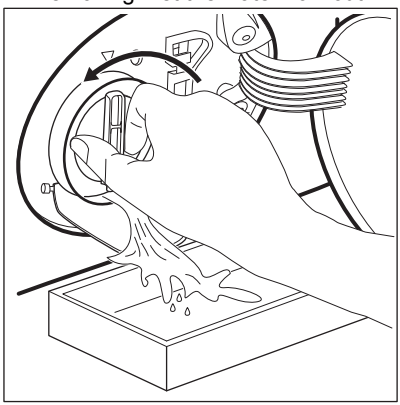

5. When the bowl is full of water, turn the filter back and empty the container.
6. Repeat the steps 4 and 5 until the water stops to flow out.
7. Turn the filter anti-clockwise to remove it.

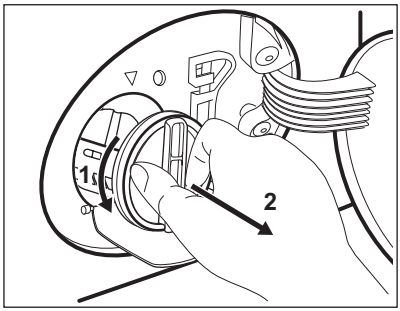

8. If it is necessary, remove fluff and objects from the filter recess.
9. Make sure that the impeller of the pump can rotate. If it does not rotate, contact the Authorised Service Centre.

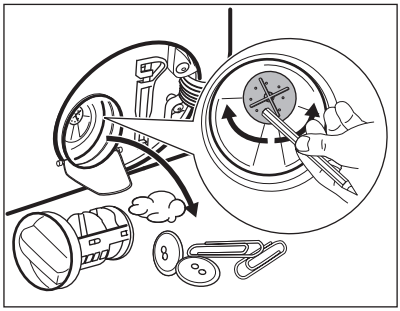

10. Clean the filter under the water tap.

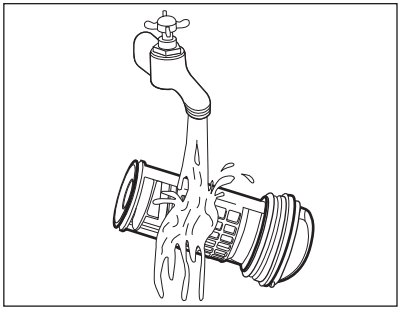

11. Put the filter back into the special guides by turning it clockwise. Make sure that you tighten the filter correctly to prevent leakages.

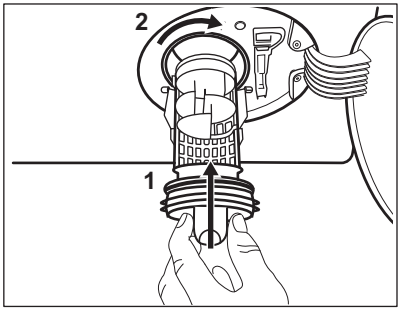

12. Close the pump cover.

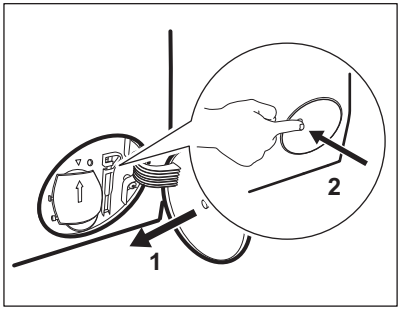

When you drain the water with the emergency drain procedure, you must activate the drain system again:

a. Put 2 litres of water in the main wash compartment of the detergent dispenser.

b. Start the programme to drain the water.

14.11 Cleaning the inlet hose filter and the valve filter

It could be necessary to clean the filters when:

- The appliance does not fill with water.
- The appliance takes long time to fills with water.
- The indicator of the Avvio/Pausa button flashes and the display shows the related alarm. Refer to 'Troubleshooting' chapter.

It is recommended to clean both the filters of the inlet hose and valve twice a year to remove any deposit, collected over the time. Proceed as described in following diagrams to clean filters:

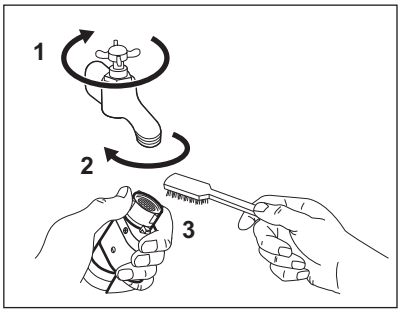

- Close the water tap.
- Remove the water inlet hose from the water tap.
- Clean the filter in the inlet hose with a stiff brush.

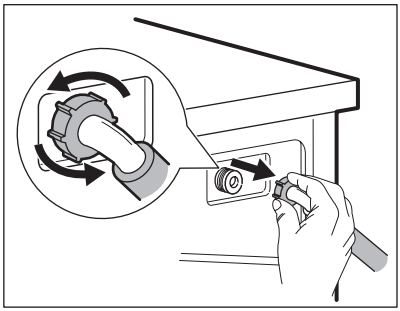

- Remove the inlet hose behind the appliance.

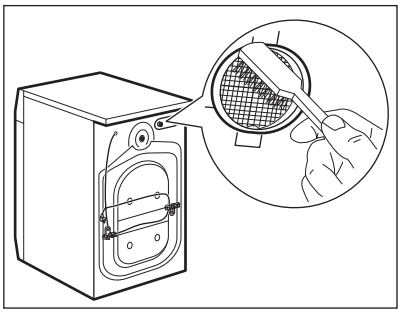

- Clean the filter in the valve with a stiff brush or a towel.

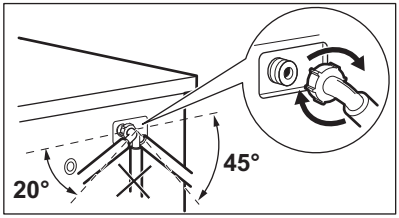

- Install again the inlet hose. Make sure that the couplings are tight to prevent leakages.
- Open the water tap.

14.12 Emergency drain

If the appliance cannot drain the water, carry out the same procedure, described in 'Cleaning the drain pump' paragraph. If necessary, clean the pump.

When you drain the water with the emergency drain procedure, you must activate the drain system again:

1. Put 2 litres of water in the main wash compartment of the detergent dispenser.
2. Start the programme to drain the water.

14.13 Frost precautions

If the appliance is installed in an area where the temperature can reach the values around 0° C or drop below, remove the remaining water from the inlet hose and the drain pump.

1. Disconnect the mains plug from the mains socket.
2. Close the water tap.
3. Put the two ends of the inlet hose in a container and let the water flow out of the hose.
4. Empty the drain pump. Refer to the emergency drain procedure.
5. When the drain pump is empty, install the inlet hose again.

⚠ WARNING!

Make sure that the temperature is higher than 5 °C and the water is flowing from the tap before you use the appliance again.
The manufacturer is not responsible for damages caused by low temperatures.

15. TROUBLESHOOTING

⚠ WARNING!

Refer to Safety chapters.

15.1 Alarm Codes and Possible failures

The appliance does not start or it stops during operation. First try to find a solution to the problem (refer to the tables).

⚠ WARNING!

Deactivate the appliance before carrying out any check.

With some problems, the display shows an alarm code and the Avvio/ Pausa **button may flash continuously:**

ⓘ

If the appliance is overloaded, remove some items from the drum and/or keep pressed the door while touching the Avvio/Pausa button until the indicator ⊶▯ stops flashing (see the picture below).

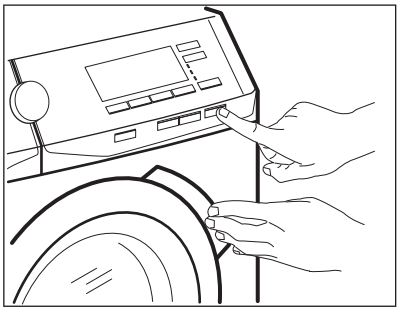

Problem	Possible solution

E 10 The appliance does not fill with water properly.	• Make sure that the water tap is open. • Make sure that the pressure of the water supply is not too low. For this information, contact your local water authority. • Make sure that the water tap is not clogged. • Make sure that the inlet hose has no kinks, damages or bends. • Make sure that the connection of the water inlet hose is correct. • Make sure that the filter of the inlet hose and the filter of the valve are not clogged. Refer to 'Care and cleaning'.
E20 The appliance does not drain the water.	• Make sure that the sink spigot is not clogged. • Make sure that the drain hose has no kinks or bends. • Make sure that the drain filter is not clogged. Clean the filter, if necessary. Refer to "Care and cleaning". • Make sure that the connection of the drain hose is correct. • Set the drain programme if you set a programme without drain phase. • Set the drain programme if you set an option which ends with water in the tub.
E40 The appliance door is open or not closed correctly.	• Make sure that the door is properly closed.
E91 Internal fail. No communication between electronic elements of the appliance.	• The programme was not finished properly or the appliance stopped too early. Switch the appliance off and on again. • If the alarm code appears again, contact the Authorised Service Centre.
EH0 The mains supply is unstable.	• Wait until mains supply is stable.
: check the air filter.	• Make sure that the air filter has been cleaned.

If the display shows other alarm codes, deactivate and activate the appliance. If the problem continues, contact the Authorised Service Centre.
In case of different problem with the appliance check the table below for possible solutions.

Problem	Possible solution
The programme does not start.	• Make sure that the mains plug is connected to the mains socket. • Make sure that the appliance door is closed. • Make sure that there is no damaged fuse in the fuse box. • Make sure that the Avvio/Pausa has been touched. • If the delay start is set, cancel the setting or wait for the end of countdown. • Deactivate the Child Lock function if it is on. • Check the position of the knob on the selected programme.
The appliance fills with water and drains immediately.	• Make sure that the drain hose is in the correct position. The hose may be positioned too low. Refer to "Installation instruction".

Problem	Possible solution
The spin phase does not operate or the washing cycle lasts longer than usual.	• Set the spin programme. • Make sure that the drain filter is not clogged. Clean the filter, if necessary. Refer to "Care and cleaning". • Adjust manually the items in the tub and start the spin phase again. This problem may be caused by balance problems.
There is water on the floor.	• Make sure that the couplings of the water hoses are tight and there is not water leakages. • Make sure that the water inlet hose and the drain hose have no damages. • Make sure you use the correct detergent and the correct quantity of it.
You cannot open the appliance door.	• Make sure that a washing programme that ends with water in tub, has not been selected. • Make sure that the washing programme is finished. • Set the drain or the spin programme if there is water in the drum. • Make sure that the appliance receives electrical power. • This problem may be caused by a failure of the appliance. Contact the Authorised Service Centre. If you need to open the door, please read carefully "Emergency door opening".
The appliance makes an unusual noise and vibrates.	• Make sure the levelling of the appliance is correct. Refer to "Installation instruction". • Make sure that the packaging and/or the transit bolts are removed. Refer to "Installation instruction". • Add more laundry in the drum. The load may be too small.
The programme duration increases or decreases during programme execution.	• The SensiCare System is able to adjust the programme duration according to the type and the laundry load size. Refer to "The SensiCare System load detection" in "Daily Use" chapter.
The washing results are not satisfactory.	• Increase the detergent quantity or use a different detergent. • Use special products to remove the stubborn stains before you wash the laundry. • Make sure that you set the correct temperature. • Decrease the laundry load.
Too much foam in the drum during the washing cycle.	• Reduce the quantity of detergent or the number of tablets or single-dose detergents.
After the washing cycle, there are some detergent residues in the dispenser drawer.	• Make sure that the flap is in the correct position (UP for powder detergent - DOWN for liquid detergent). • Make sure you have used the detergent dispenser according the indications given in this user manual.
After a steam programme, garments are partially wet.	Make sure that the appliance is accurately levelled. Adjust the appliance by raising or lowering the feet.

Problem	Possible solution
The appliance does not dry or does not dry correctly.	• Turn the water tap on. • Make sure the air filters are not clogged. **Check primary and secondary air filters.** • Make sure the drain filter is not clogged. • Reduce the laundry load. • Make sure you have set the correct cycle. if necessary, set again a short drying time.
The drying cycle is too long.	• Make sure the air filters are properly cleaned. • Make sure your laundry load does not exceed the declared load for the set programme. • Make sure that the room temperature is in the correct range.
The laundry is full of different colours fluff.	The fabrics washed in the previous cycle released fluff of a different colour: • The drying phase helps to eliminate some fluff. • Clean the clothes with a fluff remover. In case of an excessive amount of fluff in the drum refer to “Fluff in the fabrics" paragraph for more details.

After the check, activate the appliance. The programme continues from the point of interruption.
If the problem occurs again, contact the Authorised Service Centre.
The necessary data for the service centre are on the rating plate.

15.2 Emergency door opening

In case of power failure or functioning failure the appliance door remains locked. The washing programme continues when the power is restored. If the door remains locked in case of failure, it is possible to open it using the emergency unlock function.

Before opening the door:

⚠ CAUTION!

Risk of burns! Make sure that the water temperature is not too high and the laundry is not hot. If necessary, wait until they cool down.

⚠ CAUTION!

Risk of injury! Make sure that the drum is not rotating. If necessary, wait until the drum stops rotating.

ⓘ

Make sure that the water level inside the drum is not too high. If necessary, proceed with an emergency drain (refer to «Emergency drain» in «Care and cleaning» chapter).

To open the door, proceed as follows:

1. Press the On/Off button to switch the appliance off.
2. Disconnect the mains plug from the mains socket.
3. Open the filter flap.
4. Pull the emergency unlock trigger downward once. Pull it downward once again, keep it tensed and, in the meanwhile, open the appliance door.

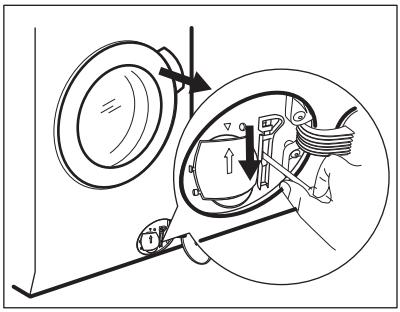

5. Take out the laundry and then close the appliance door.
6. Close the filter flap.

16. CONSUMPTION VALUES

16.1 Introduction

The QR code on the energy label supplied with the appliance provides a web link to the information related to the performance of the appliance in the EU EPREL database. Keep the energy label for reference together with the user manual and all other documents provided with this appliance.
It is also possible to find the same information in EPREL using the link **https://eprel.ec.europa.eu** and the model name and product number that you find on the rating plate of the appliance. Refer to 'Product description' chapter for the position of the rating plate.

16.2 According to Commission Regulation Eu 2019/2023

Washing only

Eco 40-60 programme	kg	kWh	Litres	hh:mm	% 1)	°C	rpm 2)
Full load	10.0	0.900	61.0	03:55	52.00	37.0	1551
Half load	5.0	0.605	47.0	02:50	52.00	33.0	1551
Quarter load	2.5	0.200	38.0	02:30	54.00	23.0	1551

1) Remaining moisture at the end of the spinning phase. The higher is the spin speed, the higher is the noise and the lower is the remaining moisture.
2) Maximum spin speed.

Wash and dry cycle

Eco 40-60 programme and Cupboard dry level	kg	kWh	Litres	hh:mm	% 1)	°C	rpm 2)
Full load	6	2.460	52.0	08:50	0.00	30.0	1551
Half load	3	1.455	42.0	05:45	0.00	28.0	1551

1) Remaining moisture at the end of the spinning phase. The higher is the spin speed, the higher is the noise and the lower is the remaining moisture.

2) Maximum spin speed.

Power consumption in different modes

Off (W)	Stand-by (W)	Delay start (W)
0.50	0.50	4.00
Time to Off/Standby mode is 15 minutes maximum.		

16.3 Common programmes - Washing only

ⓘ

These values are indicative only.

Programme	kg	kWh	Litres	hh:mm	% 1)	°C	rpm 2)
Cotoni 3) 95°C	10.0	2.900	90.0	04:05	44.00	85.0	1600
Cotoni 60°C	10.0	1.700	85.0	03:50	44.00	55.0	1600
Cotoni 4) 20°C	10.0	0.350	85.0	03:00	44.00	20.0	1600
Sintetici 40°C	4.0	0.800	55.0	02:15	35.00	40.0	1200
Delicati 5) 30°C	2.0	0.400	60.0	01:05	35.00	30.0	1200
Lana 30°C	1.5	0.300	65.0	01:05	30.00	30.0	1200

1) Remaining moisture at the end of the spinning phase. The higher is the spin speed, the higher is the noise and the lower is the remaining moisture.

2) Reference indicator of the spin speed.

3) Suitable for washing heavily soiled textiles.

4) Suitable for washing lightly soiled cottons, synthetic and mixed fabrics.

5) It also performs as quick washing cycle for lightly soiled laundry.

16.4 Common programmes - Wash and dry

These values are indicative only.

Programme	kg	kWh	Litres	hh:mm	% 1)	°C	rpm 2)
Sintetici 40°C	4.0	2.050	55.0	05:50	1.00	40.0	1200

1) Remaining moisture at the end of the spinning phase. The higher is the spin speed, the higher is the noise and the lower is the remaining moisture.

2) Reference indicator of the spin speed.

17. QUICK GUIDE

17.1 Daily use

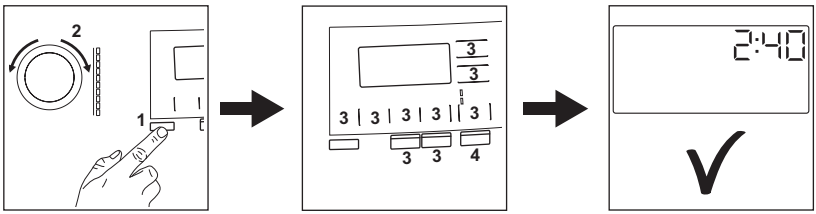

- Connect the mains plug to the mains socket.
- Open the water tap.
- Push the **On/Off** button to turn the appliance on **(1)**.
- Turn the programme dial to set the desired programme **(2)**.
- Set the desired options by means of the corresponding touch buttons **(3)**.
- Put the laundry in the drum, one item a time without exceeding the maximum suggested load. Close the door and make sure that no laundry stays between the seal and the door.
- Pour the detergent and other treatment in the proper compartment of the detergent dispenser.
- To start the programme, touch the **Avvio/ Pausa** button **(4)**.
- The appliance starts.
- At the and of the programme, remove the laundry.
- Push the **On/Off** button to turn the appliance off.

17.2 Cleaning the drain pump filter

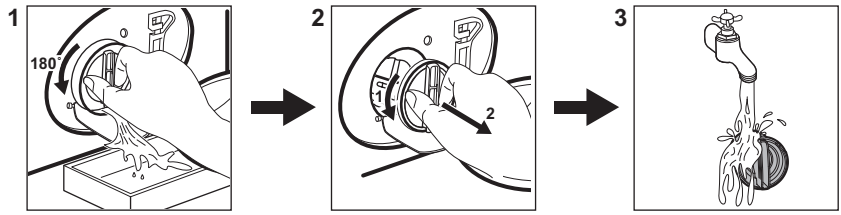

Clean the filter regularly and, especially, if the alarm code E20 appears on the display.

17.3 Programmes

Programmes	Load	Product description
Eco 40-60	10.0 kg **1)** 6 kg **2)**	White and coloured cottons. Normally soiled garments.
Cotoni	10.0 kg	**White cotton and coloured cotton**. Normally, heavily and lightly soiled items.
Sintetici	4.0 kg	**Synthetic items or mixed fabric items**. Normally soiled items.
Delicati	2.0 kg	**Delicate fabrics such as acrylics, viscose and mixed fabrics requiring gentler washing**. Normally and lightly soiled items.
Seta	0.5 kg	Special programme for silk and mixed synthetic items.
Lana/A mano	1.5 kg	**Machine washable wool, hand washable wool and other fabrics** with «hand washing» care symbol **3)**.
NonStop 3h 3kg	3.0 kg	**Mixed fabrics (cotton and synthetic items)**. Complete programme to wash and dry laundry loads up to 3 kg in one go. It only lasts 3 hours.
Vapore FreshScent	1.0 kg	Steam programme for cotton, synthetic and delicate garments.
Risciacquo	10.0 kg	All fabrics, except woollens and very delicate fabrics. Programme for rinsing and spinning.

Programmes	Load	Product description
Centrifuga/Scarico	10.0 kg	All fabrics, except woollens and very delicate fabrics. Programme for spinning and draining the water.

1) Washing programme. According to Commission Regulation EU 2019/2023, this programme at 40 °C is able to clean normally soiled cotton laundry declared to be washable at 40 °C or 60 °C, together in the same cycle.

For the reached temperature in the laundry, the programme duration and other data, please refer to 'Consumption Values' chapter.
The most efficient programmes in terms of energy consumption are generally those that perform at lower temperatures and longer duration.

2) Drying programme. **According to Commission Regulation EU 2019/2023.** This programme at default temperature and spin speed, in washing and drying mode, with rated capacity 6 kg and with Cupboard dry level performs the wash and dry cycle able to clean normally soiled cotton laundry declared to be washable at 40 °C or 60 °C, together in the same cycle and, after drying phase, the laundry can be immediately stored in a cupboard.

3) During this cycle the drum rotates slowly to ensure a gentle wash. It can seem that the drum doesn't rotate or doesn't rotate properly, but this is normal for this programme.

Loading the appliance to the **maximum capacity indicated for each programmes** **helps to reduce energy and water consumption**.

Suitable detergents for each programme

Programme	Universal powder[1)]	Liquid Universal	Liquid for coloureds	Delicates woollens	Special
Eco 40-60	▲	▲	▲	--	--
Cotoni	▲	▲	▲	--	--
Sintetici	▲	▲	▲	--	--
Seta	--	--	--	▲	▲
Delicati	--	--	--	▲	▲
Lana/A mano	--	--	--	▲	▲
NonStop 3h 3kg	--	▲	▲	--	--

1) At temperature higher than 60 °C the use of powder detergent is recommended.

▲ = Recommended

-- = Not recommended

17.4 Detergent type and quantity.

- Use only detergents and other treatments specially made for washing machines. First, follow these generic rules:
  - powder detergents (also tablets and single-dose detergents) for all types of fabric, excluding delicate. Prefer powder detergents containing bleach for whites and laundry sanitization,
  - liquid detergents (also single-dose detergents), preferably for low temperature wash programmes (60 °C max) for all types of fabric, or special ones for woollens only.
- Do not mix different types of detergents.
- Use less detergent if:

– you are washing a small load,
– the laundry is lightly soiled,
– there is large amounts of foam during washing.

- When using detergent tabs or pods, always put them inside the drum, not in the detergent dispenser and follow the manufacturer's recommendations.

Insufficient detergent may cause:

- unsatisfactory washing results,
- the wash load to turn grey,
- greasy clothes,
- mould in the appliance.

Excessive detergent may cause:

- sudsing,
- reduced washing effect,
- inadequate rinsing,
- a greater impact for the environment.

17.5 Periodic cleaning schedule

Periodic cleaning helps to extend the life of your appliance.

After each cycle, keep the door and the detergent dispenser slightly open to get air circulation and dry the humidity inside the appliance.

If the appliance is not used for a long time: close the water tap and unplug the appliance.

Indicative periodic cleaning schedule:

Descaling	Twice a year
Maintenance wash	Once a month
Clean door seal	Every two months
Clean drum	Every two months
Remove fluff inside the drum	Twice a month**1)**
Clean detergent dispenser	Every two months
Primary air filter	After each cycle
Secondary air filter	When the indicator flashes
Clean drain pump filter	Twice a year
Clean the inlet hose and the valve filter	Twice a year

1) Refer to "Fluff in the fabrics" chapter.

Regularly examine the drum to check for limescale. We recommend to run a cycle with empty drum and a descaling product occasionally.

Removing foreign objects

Make sure that pockets are empty and all loose elements are tied up before running your cycle.

Remove any foreign objects (such as metal clip, buttons, coins, etc) that you may find in the door seal, the filters and the drum. If necessary, please contact the Authorised Service Centre.

Door seal

This appliance is designed with a **self cleaning draining system**, allowing light fluff fibers that fall off the clothes to be drained out with the water. Regularly examine the seal and if necessary clean as described in the following diagram. Coins, buttons, other small items can be recovered at the end of the cycle.

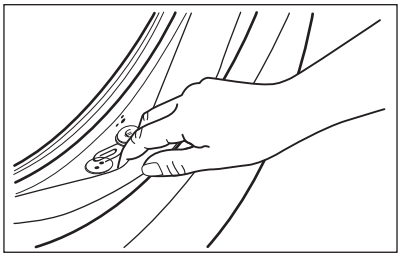

Clean it when needed, using ammonia cream cleanser agent without scratching the seal surface.

If it is necessary, remove fluff and objects from the filter recess.

18. ENVIRONMENTAL CONCERNS

Recycle materials with the symbol . Put the packaging in relevant containers to recycle it. Help protect the environment and human health by recycling waste of electrical and electronic appliances. Do not dispose of appliances marked with the symbol  with the household waste. Return the product to your local recycling facility or contact your municipal office.

electrolux.com

157097451-B-362025

