Electrolux

electrolux.com/register

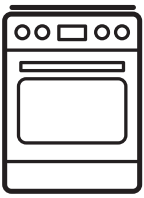

LKK500010W

EN User Manual | **Cooker**

Welcome to Electrolux! Thank you for choosing our appliance.



Get usage advice, brochures, trouble shooter, service and repair information:
www.electrolux.com/support

Subject to change without notice.

CONTENTS

1. SAFETY INFORMATION..... 2
2. SAFETY INSTRUCTIONS..... 5
3. INSTALLATION..... 7
4. PRODUCT DESCRIPTION..... 13
5. BEFORE FIRST USE..... 13
6. HOB - DAILY USE..... 14
7. HOB - HINTS AND TIPS..... 15
8. HOB - CARE AND CLEANING..... 16
9. OVEN - DAILY USE 17
10. OVEN - USING THE ACCESSORIES..... 17
11. OVEN - HINTS AND TIPS..... 18
12. OVEN - CARE AND CLEANING..... 20
13. TROUBLESHOOTING..... 22
14. ENERGY EFFICIENCY..... 23
15. ENVIRONMENTAL CONCERNS..... 24

1. ⚠ SAFETY INFORMATION

Before the installation and use of the appliance, carefully read the supplied instructions. The manufacturer is not responsible for any injuries or damage that are the result of incorrect installation or usage. Always keep the instructions in a safe and accessible location for future reference.

1.1 Children and vulnerable people safety

- This appliance can be used by children aged from 8 years and above and persons with reduced physical, sensory or mental capabilities or lack of experience and knowledge if they have been given supervision or instruction concerning the use of the appliance in a safe way and understand the hazards involved. Children of less than 8 years of age and persons with very extensive and complex disabilities shall

be kept away from the appliance unless continuously supervised.
- Children should be supervised to ensure that they do not play with the appliance.
- Keep all packaging away from children and dispose of it appropriately.
- WARNING: The appliance and its accessible parts become hot during use. Keep children and pets away from the appliance when in use and when cooling down.
- Children shall not carry out cleaning and user maintenance of the appliance without supervision.

1.2 General Safety

- This appliance is for cooking purposes only.
- This appliance is designed for single household domestic use in an indoor environment.
- This appliance may be used in offices, hotel guest rooms, bed & breakfast guest rooms, farm guest houses and other similar accommodation where such use does not exceed (average) domestic usage levels.
- Only a qualified person must install this appliance and replace the cable.
- This appliance is intended for use up to an altitude of 2000 m above sea level.
- This appliance is not intended to be used on ships, boats or vessels.
- Do not install the appliance behind a decorative door in order to avoid overheating.
- Do not install the appliance on a platform.
- Do not operate the appliance by means of an external timer or separate remote-control system.
- WARNING: Unattended cooking on a hob with fat or oil can be dangerous and may result in fire.
- Never use water to extinguish the cooking fire. Switch off the appliance and cover flames with e.g. a fire blanket or lid.

- CAUTION: The cooking process has to be supervised. A short term cooking process has to be supervised continuously.
- WARNING: Danger of fire: Do not store items on the cooking surfaces.
- Do not use a steam cleaner to clean the appliance.
- Do not use harsh abrasive cleaners or sharp metal scrapers to clean the glass door or the glass of hinged lids of the hob since they can scratch the surface, which may result in shattering of the glass.
- Metallic objects such as knives, forks, spoons and lids should not be placed on the hob surface since they can get hot.
- WARNING: The appliance and its accessible parts become hot during use. Care should be taken to avoid touching heating elements.
- Always use oven gloves to remove or insert accessories or ovenware.
- Before maintenance, cut the power supply.
- WARNING: Ensure that the appliance is switched off before replacing the lamp to avoid the possibility of electric shock.
- If the mains power supply cable is damaged, it must be replaced by the manufacturer, its Authorised Service Centre or similarly qualified persons to avoid an electrical hazard.
- Be careful when you touch the storage drawer. It can get hot.
- To remove the shelf supports first pull the front of the shelf support and then the rear end away from the side walls. Install the shelf supports in the opposite sequence.
- WARNING: Use only hob guards designed by the manufacturer of the cooking appliance or indicated by the manufacturer of the appliance in the instructions for use as suitable or hob guards incorporated in the appliance. The use of inappropriate guards can cause accidents.

2. SAFETY INSTRUCTIONS

2.1 Installation

> ⚠ **WARNING!**
>
> Only a qualified person must install this appliance.

- Remove all the packaging.
- Do not install or use a damaged appliance.
- Follow the installation instructions supplied with the appliance.
- Always take care when moving the appliance as it is heavy. Always use safety gloves and enclosed footwear.
- Do not pull the appliance by the handle.
- The kitchen cabinet and the recess must have suitable dimensions.
- Keep the minimum distance from other appliances and units.
- Install the appliance in a safe and suitable place that meets installation requirements.
- Parts of the appliance carry current. Close the appliance with furniture to prevent touching the dangerous parts.
- The sides of the appliance must stay next to appliances or units with the same height.
- Do not install the appliance adjacent to a door or under a window. This prevents hot cookware to fall from the appliance when the door or the window is opened.
- Make sure to install a stabilizing means in order to prevent tipping of the appliance. Refer to Installation chapter.

2.2 Electrical Connection

> ⚠ **WARNING!**
>
> Risk of fire and electric shock.

- All electrical connections should be made by a qualified electrician.
- The appliance must be earthed.
- Make sure that the parameters on the rating plate are compatible with the electrical ratings of the mains power supply.
- Always use a correctly installed shockproof socket.
- Do not use multi-plug adapters and extension cables.
- Do not let mains cables touch or come near the appliance door or the niche below the appliance, especially when it operates or the door is hot.
- The shock protection of live and insulated parts must be fastened in such a way that it cannot be removed without tools.
- Connect the mains plug to the mains socket only at the end of the installation. Make sure that there is access to the mains plug after the installation.
- If the mains socket is loose, do not connect the mains plug.
- Do not pull the mains cable to disconnect the appliance. Always pull the mains plug.
- Use only correct isolation devices: line protecting cut-outs, fuses (screw type fuses removed from the holder), earth leakage trips and contactors.
- The electrical installation must have an isolation device which lets you disconnect the appliance from the mains at all poles. The isolation device must have a contact opening width of minimum 3 mm.
- Fully close the appliance door before you connect the mains plug to the mains socket.

2.3 Gas connection

- All gas connections must be made by a qualified person.
- Before installation, make sure that the local distribution conditions (nature of the gas and gas pressure) and the adjustment of the appliance are compatible.
- Make sure that there is air circulation around the appliance.
- The information about the gas supply is on the rating plate.
- This appliance is not connected to a device which evacuates the products of combustion. Make sure to connect the appliance in accordance with current installation regulations. Follow the requirements for adequate ventilation.

2.4 Use

⚠ WARNING!

Risk of injury and burns.
Risk of electrical shock.

⚠ CAUTION!

The use of a gas cooking appliance results in the production of heat, moisture and products of combustion in the room in which it is installed. Ensure that the kitchen is well ventilated especially when the appliance is in use.
Prolonged intensive use of the appliance may require additional ventilation, for example the increasing of mechanical ventilation where present, additional ventilation to safely remove the products of combustion to outside (external) air whilst also providing room air changes with additional ventilation. Consult a qualified person before installation of the additional ventilation.

- Do not change the specification of this appliance.
- Make sure that the ventilation openings are not blocked.
- Do not let the appliance stay unattended during operation.
- Deactivate the appliance after each use.
- Be careful when you open the appliance door while the appliance is in operation. Hot air can release.
- Do not operate the appliance with wet hands or when it has contact with water.
- Do not use the appliance as a work surface or as a storage surface.
- Do not use aluminum foil or other materials between the cooking surface and the cookware, unless otherwise specified by the manufacturer of this appliance.
- Use only accessories recommended for this appliance by the manufacturer.
- Always use glass and jars approved for preserving purposes.

⚠ WARNING!

Risk of fire and explosion.

- Fats and oil when heated can release flammable vapours. Keep flames or heated objects away from fats and oils when you cook with them.
- The vapours that very hot oil releases can cause spontaneous combustion.
- Used oil, that can contain food remnants, can cause fire at a lower temperature than oil used for the first time.
- Do not put flammable products or items that are wet with flammable products in, near or on the appliance.
- Do not let sparks or open flames to come in contact with the appliance when you open the door.
- Open the appliance door carefully. The use of ingredients with alcohol can cause a mixture of alcohol and air.

⚠ WARNING!

Risk of damage to the appliance.

- To prevent damage or discoloration to the enamel:
  - do not put ovenware or other objects in the appliance directly on the bottom.
  - do not put aluminium foil directly on the bottom of cavity.
  - do not put water directly into the hot appliance.
  - do not keep moist dishes and food in the appliance after you finish the cooking.
  - be careful when you remove or install the accessories.
- Discoloration of the enamel or stainless steel has no effect on the performance of the appliance.
- Use a deep pan for moist cakes. Fruit juices cause stains that can be permanent.
- Do not keep hot cookware on the control panel.
- Do not let cookware boil dry.
- Be careful not to let objects or cookware fall on the appliance. The surface can be damaged.
- Never leave a burner on with empty cookware or without cookware.
- Cookware made of cast iron, aluminium or with a damaged bottom can cause scratches. Always lift these objects up when you have to move them on the cooking surface.
- Provide good ventilation in the room where the appliance is installed.

- Use only stable cookware with the correct shape and diameter larger than the dimensions of the burners.
- Make sure the flame does not go out when you quickly turn the knob from the maximum to the minimum position.
- Do not install a flame diffuser on the burner.

2.5 Care and Cleaning

⚠ WARNING!

Risk of injury, fire, or damage to the appliance.

- Before maintenance, deactivate the appliance.
  Disconnect the mains plug from the mains socket.
- Make sure the appliance is cold. There is the risk that the glass panels can break.
- Replace immediately the door glass panels when they are damaged. Contact the Authorised Service Centre.
- Fat and food remaining in the appliance can cause fire.
- Clean regularly the appliance to prevent the deterioration of the surface material.
- Clean the appliance with a moist soft cloth. Use only neutral detergents. Do not use abrasive products, abrasive cleaning pads, solvents or metal objects.
- If you use an oven spray, follow the safety instructions on the packaging.
- Do not clean the catalytic enamel (if applicable) with any kind of detergent.
- Do not clean the burners in the dishwasher.

2.6 Internal lighting

⚠ WARNING!

Risk of electric shock.

- Concerning the lamp(s) inside this product and spare part lamps sold separately: These lamps are intended to withstand extreme physical conditions in household appliances, such as temperature, vibration, humidity, or are intended to signal information about the operational status of the appliance. They are not intended to be used in other applications and are not suitable for household room illumination.
- This product contains a light source of energy efficiency class G.
- Use only lamps with the same specifications.

2.7 Service

- To repair the appliance contact the Authorised Service Centre.
- Use original spare parts only.

2.8 Disposal

⚠ WARNING!

Risk of injury or suffocation.

- Contact your municipal authority for information on how to dispose of the appliance.
- Disconnect the appliance from the mains supply.
- Cut off the mains electrical cable close to the appliance and dispose of it.
- Flat the external gas pipes.

3. INSTALLATION

⚠ WARNING!

Refer to Safety chapters.

3.1 Location of the appliance

ⓘ

Do not install the cooker near the sink or near the cabinet with sink. Humidity / water drops can enter between the side panel and the cabinet and in time may damage the paint of the side panel.

You can install your freestanding appliance with cabinets on one or two sides and in the corner.

For minimal distances for fitting check the table.

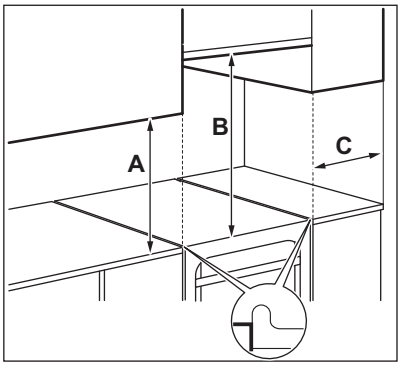

Minimum distances

Dimension	mm
A	400
B	650
C	150

3.2 Technical data

Voltage	230 V
Frequency	50 - 60 Hz
Appliance class	1

Dimension	mm
Height	855
Width	500
Depth	600

3.3 Other technical data

Appliance category:	II2H3+
Gas original:	G20 (2H) 20 mbar
Gas replacement:	G30/G31 (3+) 28-30/37 mbar

3.4 Bypass diameters

BURNER	Ø BYPASS 1/100 mm
Auxiliary	29
Semi-rapid	32
Rapid	42

3.5 Gas burners for NATURAL GAS G20 20 mbar

BURNER	NORMAL POWER kW	REDUCED POWER kW	INJECTOR MARK 1/100 mm
Rapid	2.9	0.80	119
Semi-rapid	1.85	0.43	96
Auxiliary	0.95	0.35	70

3.6 Gas burners for LPG G30 28-30 mbar

BURNER	NORMAL POWER kW	REDUCED POWER kW	INJECTOR MARK 1/100 mm	NOMINAL GAS FLOW g/h
Rapid	3.0	0.72	88	218
Semi-rapid	1.9	0.43	71	138
Auxiliary	0.95	0.35	50	69

3.7 Gas burners for LPG G31 37 mbar

BURNER	NORMAL POWER kW	REDUCED POWER kW	INJECTOR MARK 1/100 mm	NOMINAL GAS FLOW g/h
Rapid	2.8	0.72	88	200
Semi-rapid	1.8	0.43	71	129
Auxiliary	0.9	0.35	50	64

3.8 Gas connection

⚠ WARNING!

Before you connect the gas, disconnect the appliance from the electricity supply or switch off the fuse in the fuse box. Close the primary valve of the gas supply.

Use a fixed connections or use a flexible stainless steel pipes in compliance with the regulation in force. If you use flexible metallic pipes, make sure they do not come in touch with mobile parts and they are not squeezed.

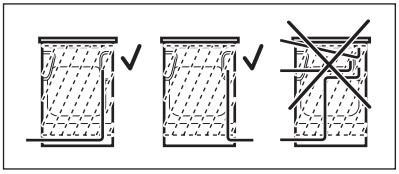

⚠ WARNING!

The gas connection pipe must not touch the part of the appliance shown in the illustration.

⚠ WARNING!

When installation is complete, make sure that the seal of each pipe fitting does not leak. To check the seal use a soap solution, not a flame.

3.9 Flexible nonmetal pipes connection

If you have an easy access to the connection, you can use a flexible pipe. The flexible pipe must be tightly attached by clamps.

In installation always use the pipe holder and the gasket. The flexible pipe can be applied when:

- it can not get hotter than room temperature, higher than 30 °C,
- it is not longer than 1500 mm,
- it has no narrowing anywhere,
- it is not twisted or tighten,
- it does not get in touch with sharp edges or corners,
- it's conditions can be easily checked.

When checking the flexible pipe make sure:

- it does not show cracks, cuts, marks of burnings on the two ends and on its full length,
- the material is not hardened, but shows its correct elasticity,
- the fastening clamps are not rusted,

• expired term is not due.

If one or more defects are visible, do not repair the pipe, but replace it.

The gas supply ramp is on the rear side of the control panel.

3.10 Adjustment to different types of gas

ⓘ

Let only an authorized person do the adjustment to different types of gas.

ⓘ

The appliance is set for natural gas, you can change it to liquid gas, with the correct injectors.
The gas rate is adjusted to suit.

⚠ **WARNING!**

Before you replace the injectors, make sure that the gas knobs are in the Off position. Disconnect the appliance from the electrical supply. Let the appliance cool down. There is a risk of injury.

ⓘ

The appliance is set to default gas. To change the setting always use the gasket sealing.

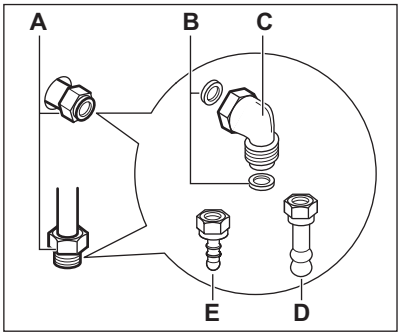

A. Gas connection point (only one point is applicable for the appliance)
B. Gasket
C. Adjustable connection
D. Natural Gas pipe holder
E. LPG pipe holder

3.11 Hob injectors replacement

Replace the injectors when you change the gas type.

1. Remove the pan supports.
2. Remove the caps and crowns of the burner.
3. Remove the injectors with a socket spanner 7.
4. Replace injectors with the ones necessary for the type of gas you use.

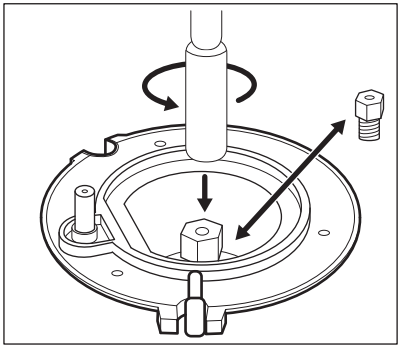

5. Replace the rating plate (it is near the gas supply pipe) with the one for the new type of gas supply.

ⓘ

You can find this plate in the bag supplied with the appliance.

If the supply gas pressure is not constant or it is different from the necessary pressure, install an applicable pressure adjuster on the gas supply pipe.

3.12 Adjusting the minimum gas level on the hob burner

1. Disconnect the appliance from the electricity.
2. Remove the knob for the hob. If there is no access to the bypass screw dismount the control panel before adjustment start.
3. With a thin and flat screwdriver adjust the bypass screw A.
   The model determines the position of the bypass screw A.

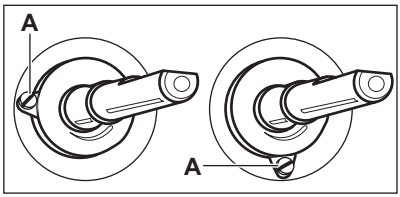

Changing from natural gas to liquid gas

1. Fully tighten the bypass screw.
2. Put the knob back.

Changing from liquid gas to natural gas

1. Unscrew approximately one turn the bypass screw position A.
2. Put the knob for the hob back.
3. Connect the appliance to the electricity.

> **⚠ WARNING!**
>
> Put the mains plug into the mains socket only if all parts are back into their initial position. There is a risk of injury.

4. Light the burner.
   Refer to "Hob - Daily use" chapter.
5. Turn the knob for the hob to the minimum position.
6. Remove the knob for the hob again.
7. Screw on slowly the bypass screw till the flame becomes minimum and stable.
8. Put the knob for the hob back on.

3.13 Levelling of the appliance

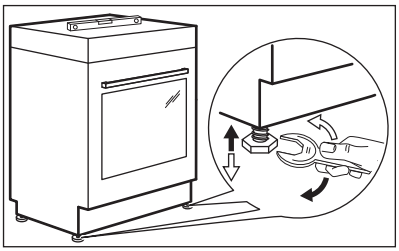

Use small feet on the bottom of appliance to set the appliance top surface level with other surfaces.

3.14 Anti-tilt protection

Set the correct height and area for the appliance before you attach the anti-tilt protection.

> **⚠ CAUTION!**
>
> Make sure you install the anti-tilt protection at the correct height.

> ⓘ
>
> Make sure that the surface behind the appliance is smooth.

You must install the anti-tilt protection. If you do not install it, the appliance can tilt.

Your appliance has the symbol shown on the picture (if applicable) to remind you about the installation of the anti-tilt protection.



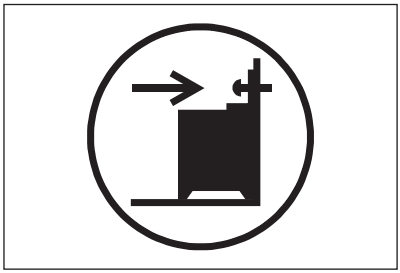

1. Install the anti-tilt protection B - 328 mm down from the top surface of the appliance and A - 67 mm from the side of the appliance into the circular hole on a bracket. Screw it into the solid material or use applicable reinforcement (wall).

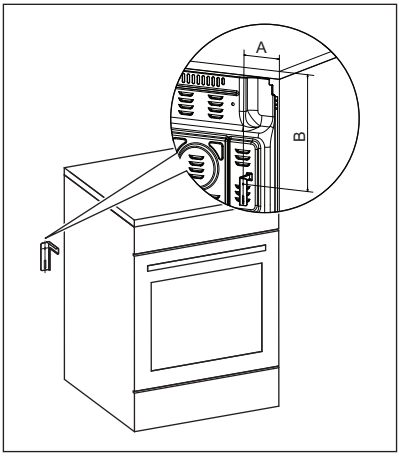

2. You can find the hole on the left side at the back of the appliance. Lift the front of the appliance and put it in the middle of the space between the cupboards. If the space between the bench cupboards is larger than the width of the appliance, you must adjust the side measurement to centre the appliance.

ⓘ

If you changed the dimensions of the cooker, you must align the non-tip device correctly.

⚠ CAUTION!

If the space between the bench cupboards is larger than the width of the appliance, you must adjust the side measurement to the centre of the appliance.

3.15 Electrical installation

⚠ WARNING!

The manufacturer is not responsible if you do not follow the safety precautions from Safety chapters.

This appliance is supplied with a main plug and a main cable.

⚠ WARNING!

The power cable must not touch the part of the appliance shaded in the illustration.

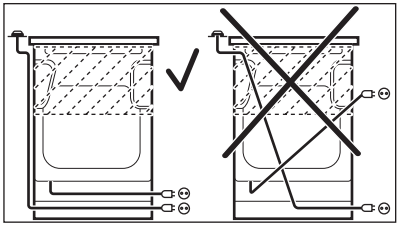

4. PRODUCT DESCRIPTION

4.1 General overview

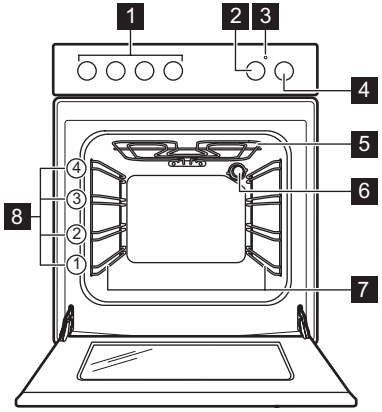

1 Knobs for the hob
2 Knob for the temperature
3 Temperature indicator / symbol
4 Knob for the oven functions
5 Heating element
6 Lamp
7 Shelf support, removable
8 Shelf positions

4.2 Cooking surface layout

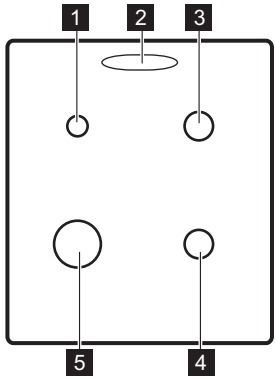

1 Auxiliary burner
2 Steam outlet - number and position depend on the model
3 Semi-rapid burner
4 Semi-rapid burner
5 Rapid burner

4.3 Accessories

- **Wire shelf**
  For cookware, cake tins, roasts.
- **Baking tray**
  For cakes and biscuits.
- **Storage drawer**
  The storage drawer is below the oven cavity.

5. BEFORE FIRST USE

⚠ **WARNING!**
Refer to Safety chapters.

5.1 Initial preheating and cleaning

Preheat the empty appliance before the first use and contact with food. The appliance can emit unpleasant smell and smoke. Ventilate the room during preheating.

1. Remove all accessories and removable shelf supports from the appliance.
2. Set the function . Set the maximum temperature. Let the appliance operate for 1 h.
3. Set the function . Set the maximum temperature. The maximum temperature for this function is 210 °C. Let the appliance operate for 15 min.
4. Turn off the appliance and wait until it is cold.
5. Clean the appliance and the accessories only with a microfibre cloth, warm water and a mild detergent.
6. Put the accessories and removable shelf supports back to their initial position.

5.2 Installing the steam outlet cover

1. Place the hooks of the cover under the front edge of the steam outlet holes.
2. Push down the back edge to lock the cover.

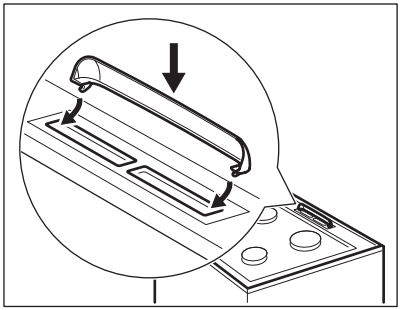

6. HOB - DAILY USE

⚠ WARNING!

Refer to Safety chapters.

6.1 Ignition of the hob burner

ⓘ

Always light the burner before you put on the cookware.

⚠ WARNING!

Be very careful when you use open fire in the kitchen environment. The manufacturer declines any responsibility in case of the flame misuse.

1. Turn the knob for the hob counterclockwise to the maximum gas flow position and push it down to light the burner.
2. Keep the knob for the hob pushed for equal or less than 10 seconds to let the thermocouple warm up. If not, the gas supply is interrupted.
3. Adjust the flame after it is regular.

⚠ WARNING!

Do not keep the knob pushed for more than 15 seconds. If the burner does not light after 15 seconds, release the knob, turn it into the off position and try to light the burner again after minimum 1 minute.

ⓘ

If after some tries the burner does not light, check if the crown and its cap are in the correct position.

ⓘ

In the absence of electricity you can ignite the burner without an electrical device. In this case approach the burner with a flame, push the relevant knob down and turn it to maximum position. Keep the knob pushed for equal or less than 10 seconds to let the thermocouple warm up.

If the burner accidentally goes out, turn the knob to the off position and try to light the burner again after minimum 1 minute.

The spark generator can start automatically when you switch on the mains, after installation or a power cut. It is normal.

6.2 Burner overview

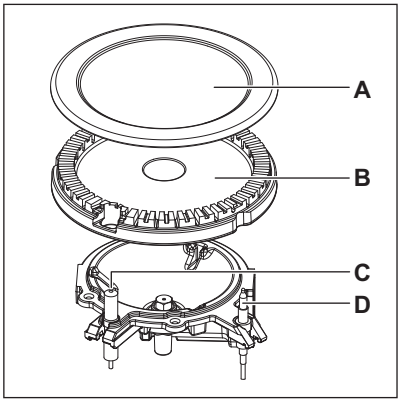

A. Burner cap
B. Burner crown
C. Ignition candle
D. Thermocouple

6.3 Turning the burner off

To put the flame out, turn the knob to the off position 0 .

⚠ WARNING!

Always turn the flame down or switch it off before you remove the pans from the burner.

7. HOB - HINTS AND TIPS

⚠ WARNING!

Refer to Safety chapters.

7.1 Cookware

⚠ WARNING!

Do not put the same pan on two burners.

⚠ WARNING!

Do not put unstable or damaged pots on the burner to prevent spills and injuries.

⚠ CAUTION!

Make sure that pot handles are not above the front edge of the cooktop.

⚠ CAUTION!

Make sure that the pots are placed centrally on the burner in order to get the maximum stability and a lower gas consumption.

⚠ WARNING!

Do not use vessels that have rim based or convex-based shaped bottom on the hotplate as there is a high risk of overturn.

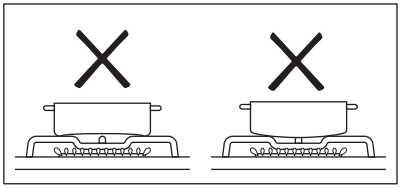

7.2 Diameters of cookware

⚠ WARNING!

Use cookware with diameters applicable to the size of burners.

Burner	Diameter of cookware (mm)
Auxiliary	120 - 180
Semi - rapid	140 - 220/240 1)
Rapid	160 - 220/260 1)

1) When a single pot is used on the hob.

8. HOB - CARE AND CLEANING

⚠ WARNING!

Refer to Safety chapters.

8.1 General information

- Clean the hob after each use.
- Always use cookware with a clean base.
- Scratches or dark stains on the surface have no effect on how the hob operates.
- Use a special cleaning agent suitable for the surface of the hob.

8.2 Cleaning the hob

- **Remove immediately:** melted plastic, plastic foil, salt, sugar and food with sugar, otherwise, the dirt can cause damage to the hob. Take care to avoid burns.
- **Remove when the hob is sufficiently cool:** limescale rings, water rings, fat stains, shiny metallic discoloration. Clean the hob with a moist cloth and a non-abrasive detergent. After cleaning, wipe the hob dry with a soft cloth.
- To clean the enamelled parts, caps and crowns, wash them with warm soapy water and dry them carefully before you put them back on.

8.3 Cleaning the spark plug

This feature is obtained through a ceramic ignition candle with a metal electrode. Keep these components well clean to prevent difficult lighting and check that the burner crown holes are not obstructed.

8.4 Pan supports

1. Remove the pan supports to easily clean the hob.

ⓘ

Be very careful when you replace the pan supports to prevent the hob top from damage.

2. The enamel coating occasionally can have rough edges, so be careful when you wash the pan supports by hand and dry them. If necessary, remove stubborn stains with a paste cleaner.
3. After you clean the pan supports, make sure that they are in correct positions.
4. For the burner to operate correctly, make sure that the arms of the pan supports are aligned with the center of the burner.

8.5 Periodic maintenance

Speak to your local Authorised Service Centre periodically to check the conditions of the gas supply pipe and the pressure adjuster, if fitted.

9. OVEN - DAILY USE

⚠ WARNING!
Refer to Safety chapters.

9.1 Turning the oven on and off

1. Turn the knob for the oven functions to select an oven function.
2. Turn the knob for the temperature to select the temperature.

The lamp turns on when the oven operates.

ⓘ
For the functions without heating there is no need to set the temperature.

3. To turn off the oven, turn the knobs for the oven functions and temperature to the off position.

9.2 Safety thermostat

Incorrect operation of the oven or defective components can cause dangerous overheating. To prevent this, the oven has a safety thermostat which interrupts the power supply. The oven turns on again automatically when the temperature drops.

9.3 Oven functions

0	**Off position** The oven is off.
	Conventional cooking To bake and roast food on one shelf position.
	Moist conventional baking This function was used to comply with the Energy Efficiency Class and Ecodesign Regulations (according to EU 65/2014 and EU 66/2014). Tests according to: IEC/EN 60350-1. The oven door should be closed during cooking so that the function is not interrupted and to ensure that the oven operates with the highest energy efficiency possible. When you use this function, the temperature in the cavity may differ from the set temperature. The heating power may be reduced. For general energy saving recommendations refer to "Energy Efficiency" chapter, Energy Saving. This function is designed to save energy during cooking. For the cooking instructions refer to "Hints and tips" chapter, Moist conventional baking.
	Bottom heat To bake cakes with crispy bottom and to preserve food.
	Fast grilling To grill thin pieces of food in large quantities and to toast bread.
	Quick heat To roast larger joints of meat or poultry on one shelf position. To make gratin and to brown. The maximum temperature for this function is 210 °C.
	Slow cook To prepare tender, succulent roasts.

10. OVEN - USING THE ACCESSORIES

⚠ WARNING!
Refer to Safety chapters.

10.1 Inserting the accessories

Tray:

ⓘ
Do not push the baking tray or deep pan all the way to the back wall of the cavity. This prevents the heat from circulating around the tray. The food may be burnt, especially in the rear part of the tray.

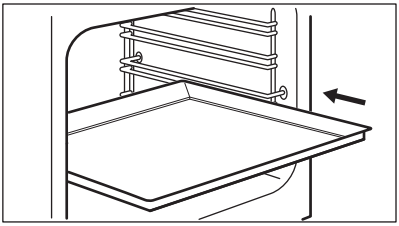

Push the tray or deep pan between the guide bars of the shelf support. Make sure it does not touch the back wall of the oven.

Wire shelf:

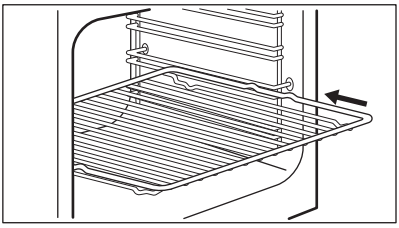

Put the shelf between the guide bars of the shelf support.

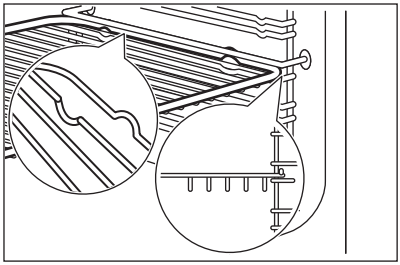

11. OVEN - HINTS AND TIPS

⚠ **WARNING!**

Refer to Safety chapters.

ⓘ

The temperature and baking times in the tables are guidelines only. They depend on the recipes and the quality and quantity of the ingredients used.

11.1 Moist conventional baking

Food	Temperature (°C)	Time (min)	Shelf position	Accessories
Bread and pizza				
Buns	190	20 - 30	2	baking tray or grill- / roasting pan
Frozen pizza 350 g	190	30 - 40	2	wire shelf
Cakes in baking tray				
Swiss roll	180	20 - 30	2	baking tray or grill- / roasting pan
Brownie	180	25 - 35	2	baking tray or grill- / roasting pan
Cakes in tin				
Soufflé	200	30 - 40	2	six ceramic ramekins on wire shelf

Food	Temperature (°C)	Time (min)	Shelf position	Accessories
Sponge flan base	180	20 - 30	2	flan base tin on wire shelf
Sponge cake	150	30 - 40	2	cake tin on wire shelf
Fish				
Fish in pouches 300 g	180	20 - 30	2	baking tray or grill- / roasting pan
Whole fish 200 g	180	25 - 35	2	baking tray or grill- / roasting pan
Fish fillet 300 g	180	30 - 40	2	pizza pan on wire shelf
Meat				
Meat in pouch 250 g	200	25 - 35	2	baking tray or grill- / roasting pan
Meat skewers 500 g	200	25 - 35	2	baking tray or grill- / roasting pan
Small baked items				
Cookies	160	25 - 35	2	baking tray or grill- / roasting pan
Macarons	170	25 - 35	2	baking tray or grill- / roasting pan
Muffins	180	30 - 40	2	baking tray or grill- / roasting pan
Savoury cracker	160	25 - 35	2	baking tray or grill- / roasting pan
Shortcrust pastry biscuits	140	30 - 40	2	baking tray or grill- / roasting pan
Tartelettes	170	15 - 25	2	baking tray or grill- / roasting pan
Vegetarian				
Mixed vegetables in pouch 400 g	190	30 - 40	2	baking tray or grill- / roasting pan
Omelette	200	20 - 30	2	pizza pan on wire shelf
Vegetables on tray 700 g	190	30 - 40	2	baking tray or grill- / roasting pan

11.2 Information for test institutes

Food	Function	Temperature (°C)	Accessories	Shelf position	Time (min)
Small cakes (16 per tray)	Conventional cooking	150	baking tray or grill- / roasting pan	3	15 - 25
Apple pie (2 tins Ø20 cm, diagonally off set)	Conventional cooking	200	2 round light tins	1	60 - 70
Fatless sponge cake	Conventional cooking	170	round cake tin on wire shelf	2	20 - 30
Pastry stripes	Conventional cooking	140	baking tray or grill- / roasting pan	3	15 - 25
Toast**1)**	Fast grilling	250	wire shelf	2	2 - 5

Food	Function	Temperature (°C)	Accessories	Shelf position	Time (min)
Beef burger 2)	Fast grilling	250	wire shelf	3	15 first side; 15 second side

1) Preheat the oven for 5 minutes.

2) Preheat the oven for 10 minutes.

12. OVEN - CARE AND CLEANING

⚠ WARNING!

Refer to Safety chapters.

12.1 Notes on cleaning

Clean the front of the oven with a soft cloth with warm water and a mild cleaning agent.

To clean metal surfaces, use a dedicated cleaning agent.

Clean the oven interior after each use. Fat accumulation or other food remains may result in a fire.

Clean all accessories after each use and let them dry. Use a soft cloth with warm water and a cleaning agent. Do not clean the accessories in the dishwasher.

Clean stubborn stains with a special oven cleaner.

Do not clean the non-stick accessories using abrasive cleaner or sharp-edged objects.

12.2 Stainless steel or aluminium ovens

Clean the oven door with a damp cloth or sponge only. Dry it with a soft cloth.

Do not use steel wool, acids or abrasive materials as they can damage the oven surface. Clean the oven control panel with the same precautions.

12.3 Removing the shelf supports

To clean the oven, remove the shelf supports.

⚠ CAUTION!

Be careful when you remove the shelf supports.

1. Pull the front of the shelf support away from the side wall.

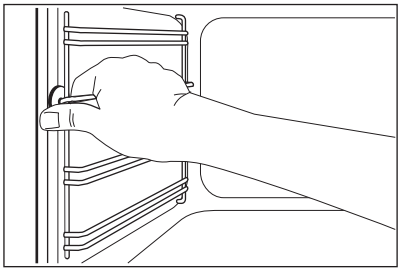

2. Pull the rear end of the shelf support away from the side wall and remove it.

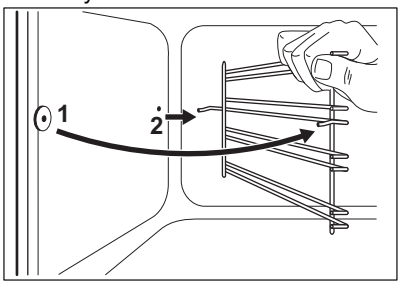

Install the removed accessories in the opposite sequence.

12.4 Removing and installing the oven glass panels

You can remove the internal glass panels to clean it. The number of glass panels is different for different models.

⚠ WARNING!

Keep the oven door slightly open during the cleaning process. When you open it fully it may accidentally close causing potential damage.

⚠ WARNING!

Do not use the appliance without the glass panels.

1. Open the door until it is at an angle of approximately 30°. The door stands alone when slightly open.

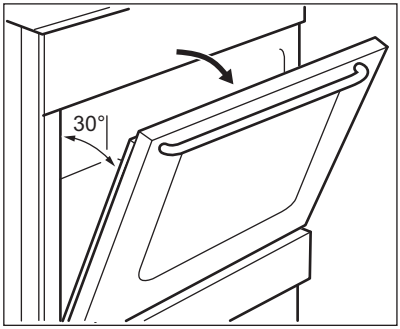

2. Hold the door trim (B) at the top edge of the door on both sides and push inwards to release the clip seal.

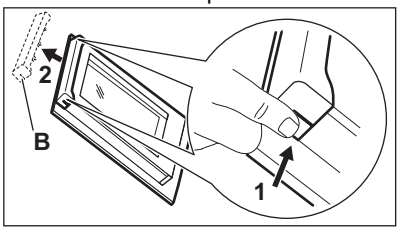

3. Pull the door trim to the front to remove it.

⚠ WARNING!

When you take out the glass panels the oven door tries to close.

4. Hold the top edge of the door glass panels and pull them up one by one.
5. Clean the glass panel with water and soap. Dry the glass panel carefully.

When the cleaning is complete, install the glass panels and the oven door. Do the above steps in the opposite sequence. Install the smaller panel first, then the larger.

⚠ CAUTION!

Make sure that you install the internal glass panel in the appropriate seats.

12.5 Removing the drawer

⚠ WARNING!

Do not keep flammable items (such as cleaning materials, plastic bags, oven gloves, paper or cleaning sprays) in the drawer. When you use the oven, the drawer can become hot. There is a risk of fire.

The drawer below the oven can be removed for cleaning.

1. Pull the drawer out until it stops.

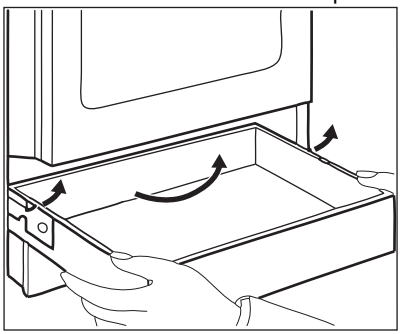

2. Slowly lift the drawer.
3. Pull the drawer out fully.

To install the drawer, do the above steps in the opposite sequence.

12.6 Replacing the lamp

⚠ WARNING!

Risk of electric shock.
The lamp can be hot.

1. Turn off the oven. Wait until the oven is cold.
2. Disconnect the oven from the mains.
3. Put a cloth on the bottom of the cavity.

The back lamp

1. Turn the lamp glass cover to remove it.
2. Clean the glass cover.
3. Replace the lamp with a suitable 300 °C heat-resistant lamp.
4. Install the glass cover.

13. TROUBLESHOOTING

⚠ WARNING!
Refer to Safety chapters.

13.1 What to do if...

Problem	Possible cause	Remedy
There is no spark when you try to activate the spark generator.	The hob is not connected to an electrical supply or it is connected incorrectly.	Check if the hob is correctly connected to the electrical supply. Refer to the connection diagram.
	The fuse is blown.	Make sure that the fuse is the cause of the malfunction. If the fuse is blown again and again, contact a qualified electrician.
	Burner cap and crown are placed incorrectly.	Place the burner cap and crown correctly.
The flame extinguishes immediately after ignition.	Thermocouple is not heated up sufficiently.	After lightning the flame, keep the spark generator activated for equal or less than 10 seconds.
The flame ring is uneven.	Burner crown is blocked with food residues.	Make sure that the injector is not blocked and the burner crown is clean.
The burners do not work.	There is no gas supply.	Check the gas connection.
The flame colour is orange or yellow.		The flame can look orange or yellow in some areas of the burner. This is normal.
The oven does not heat up.	The oven is deactivated.	Activate the oven.
	The necessary settings are not set.	Make sure that the settings are correct.
The lamp does not operate.	The lamp is defective.	Replace the lamp.
Steam and condensation settle on the food and in the cavity of the oven.	You left the dish in the oven for too long.	Do not leave the dishes in the oven for longer than 15 - 20 minutes after the cooking process ends.
It takes too long to cook the dishes or they cook too quickly.	The temperature is too low or too high.	Adjust the temperature if necessary. Follow the advice in the user manual.

13.2 Service data

If you cannot find a solution to the problem yourself, contact your dealer or an Authorised Service Centre.

The necessary data for the service centre is on the rating plate. The rating plate is on the front frame of the appliance cavity. Do not remove the rating plate from the appliance cavity.

We recommend that you write the data here:	
Model (MOD.)	.....
Product number (PNC)	.....
Serial number (S.N.)	.....

14. ENERGY EFFICIENCY

14.1 Product Information according to EU Ecodesign Regulations for Hob

Model identification	LKK500010W	
Type of hob	Hob inside Freestanding Cooker	
Number of gas burners	4	
Energy efficiency per gas burner (EE gas burner)	Left rear - Auxiliary	not applicable %
	Right rear - Semi Rapid	55.3 %
	Right front - Semi Rapid	55.3 %
	Left front - Rapid	55.5 %
Energy efficiency for the gas hob (EE gas hob)		55.4 %

EN 30-2-1: Domestic cooking appliances burning gas - Part 2-1 : Rational use of energy - General.

14.2 Hob - Energy saving

You can save energy during everyday cooking if you follow the hints below.

- When you heat up water, use only the amount you need.
- If it is possible, always put the lids on the cookware.
- Before you use the burners and pan support make sure they are assembled correctly.
- The cookware bottom should have the correct diameters for the burner size.
- Put the cookware directly over the burner and in the centre of it.
- When the liquid starts to boil, turn down the flame to barely simmer the liquid.
- If it is possible, use a pressure cooker. Refer to its user manual.

14.3 Product Information Sheet and Product Information according to EU Energy Labelling and Ecodesign Regulations for Oven

Supplier's name	Electrolux
Model identification	LKK500010W 943005579
Energy Efficiency Index	95.0

Energy efficiency class	A
Energy consumption with a standard load, conventional mode	0.76 kWh/cycle
Number of cavities	1
Heat source	Electricity
Volume	60 l
Type of oven	Oven inside Freestanding Cooker
Mass	36.0 kg

IEC/EN 60350-1 - Household electric cooking appliances - Part 1: Ranges, ovens, steam ovens and grills - Methods for measuring performance.

14.4 Oven - Energy saving

Following tips below will help you save energy when using your appliance.

Make sure that the appliance door is closed when the appliance operates. Do not open the appliance door too often during cooking. Keep the door gasket clean and make sure it is well fixed in its position.

Use metal cookware and dark, non-reflective tins and containers to improve energy saving.

Do not preheat the appliance before cooking unless specifically recommended.

Keep breaks between baking as short as possible when you prepare a few dishes at one time.

Residual heat
When the cooking duration is longer than 30 min, reduce the appliance temperature to minimum 3 - 10 min before the end of cooking. The residual heat inside the appliance will continue to cook.

Use the residual heat to keep the food warm or warm up other dishes.

Keep food warm
Choose the lowest possible temperature setting to use residual heat and keep the food warm.

14.5 Product Information for power consumption and maximum time to reach applicable low power mode

Power consumption in off mode	0.3 W
Maximum time needed for the equipment to automatically reach the applicable low power mode	20 min

15. ENVIRONMENTAL CONCERNS

Recycle materials with the symbol ♺. Put the packaging in relevant containers to recycle it. Help protect the environment and human health by recycling waste of electrical and electronic appliances. Do not dispose of appliances marked with the symbol with the household waste. Return the product to your local recycling facility or contact your municipal office.

electrolux.com

867375286-A-172024

