Instructions for use and installation



EN ORIGINAL OPERATOR'S MANUAL

LIEBHERR

Contents

1 General Safety Instructions..... 3
1.1 Proper use..... 3
1.2 Foreseeable Misuse..... 3
1.3 User group..... 3
1.4 Hazards – Warnings for the User..... 3
1.5 Faults, damage and repairs..... 4
1.6 Disposal Instructions..... 4
1.7 Conformity..... 4
1.8 Climate classes..... 5
1.9 SVHC substances in accordance with the REACH Regulation..... 5
1.10 EPREL Database..... 5
1.11 Open-source licenses..... 5
1.12 Spare parts..... 5
1.13 Warning levels..... 5

2 The appliance at a glance..... 5
2.1 Delivered contents..... 5
2.2 Overview of appliances and equipment..... 5
2.3 VarioTempZone..... 6
2.4 SmartDevice..... 6

3 Setting up and connecting..... 6
3.1 Installation conditions..... 6
3.2 Appliance dimensions..... 7
3.3 Ventilation requirements..... 7
3.4 Connection dimensions for the power supply..... 7
3.5 Water connection..... 8
3.6 Transporting the appliance..... 8
3.7 Unpacking the appliance..... 9
3.9 Connecting the appliance to the water supply..... 9
3.10 Setting up the device..... 10
3.11 Setting up the appliance level..... 11
3.12 Fitting the appliance into a kitchen recess..... 11
3.13 After setting up..... 12
3.14 Connecting the appliance to the power supply..... 12
3.15 Disposal of packaging..... 13

4 Functionality of the Touch & Swipe display..... 13
4.1 Navigation and symbol explanation..... 13
4.2 Menus..... 13
4.3 Sleep mode..... 14

5 Start-up..... 14
5.1 Switching on appliance (first use)..... 14
5.2 Starting the IceMaker for the first time..... 14

6 Storage..... 15
6.1 Information regarding storage..... 15
6.2 Fridge compartment..... 15
6.3 BioFresh..... 15
6.4 Freezer compartment..... 16
6.5 Storage times..... 16

7 Energy saving..... 17

8 Use..... 17
8.1 Controls and displays..... 17
8.1.1 Status display..... 17
8.1.2 Display symbols..... 17
8.2 Appliance functions..... 18
8.2.1 Notes on the appliance functions..... 18
Switching appliance off and on..... 18
Switching temperature zone off and on..... 18
Temperature..... 18
BioFresh B-Value..... 19
SuperCool..... 20
SuperFrost..... 20
PartyMode..... 21
HolidayMode..... 21
SabbathMode..... 22
EnergySaver..... 22
IceMaker / MaxIce..... 23
IceMaker water inflow..... 24
TubeClean..... 24
CleaningMode..... 25
Child lock..... 25
Reminder..... 25
Language..... 26
Temperature unit..... 26
Display Brightness..... 26
H-Value..... 27
WiFi..... 27
Appliance and software information..... 28
Start defrost cycle..... 28
Door alarm..... 29
Demo mode..... 29
Resetting to factory settings..... 30
8.3 Messages..... 30
8.3.1 Overview of warnings..... 30
8.3.2 Ending warnings..... 31
8.3.3 Overview of reminders..... 31
8.3.4 Ending reminders..... 32

9 Equipment..... 32
9.1 Door racks..... 32
9.2 Shelves..... 33
9.3 Variable bottle shelf..... 34
9.4 Drawers..... 35
9.5 Lid for BioFresh-safe..... 36
9.6 Glass shelves..... 36
9.7 IceMaker..... 37
9.8 Egg rack..... 37
9.9 Bottle rack..... 37

10 Maintenance..... 37

10.1 FreshAir carbon filter 37
10.2 Disassembling the door racks 38
10.3 Assembling the door racks 38
10.4 Disassembling / assembling pull-out systems 39
10.5 Removing / inserting the variable bottle shelf 39
10.6 Lid for BioFresh-safe 39
10.7 Defrosting the appliance 40
10.8 Cleaning the appliance 40

11 Customer support 41
11.1 Technical specifications 41
11.2 Operating noises 41
11.3 Technical faults 42
11.4 Customer Service 43
11.5 Rating plate 44

12 Decommissioning 44

13 Disposal 44
13.1 Preparing the appliance disposal 44
13.2 Environmentally friendly disposal of the appliance 44

The manufacturer is constantly working to improve all types and models. Therefore, please be aware that we reserve the right to make changes to the shape, equipment and technology.

Symbol	Explanation
	**Read instructions** Please read the information in these instructions carefully to understand all of the benefits of your new appliance.
	**Additional information online** The digital manual with supplemental information and in additional languages can be found online by scanning the QR code on the front page of this manual or by entering the service number at **home.liebherr.com/fridge-manuals**. The service number can be found on the serial tag: 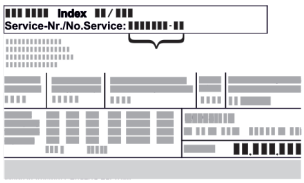 *Fig.* Example illustration
	**Check appliance** Check all parts for transport damage. If you have any complaints, please contact your agent or customer service.
	**Differences** These instructions apply to a range of models, so there may be differences. Sections that apply to certain models only are indicated by an asterisk (*).
	**Instructions and results** Instructions are marked with a ▶. Results are marked with a ▷.
	**Videos** Videos about the appliances are available on the YouTube channel of Liebherr-Hausgeräte.

Open-source licenses:

The appliance includes software components that make use of open-source licenses. You can find information on the open-source licenses to be used here: **home.liebherr.com/open-source-licenses**

1 General Safety Instructions

Keep this user information in a safe place so that you can access it at any time.

If you hand the appliance on to someone else, give this user information to the next owner.

To use the appliance properly and safely, read this user information carefully before installation and use. Always follow the instructions, safety instructions and warnings contained in it. The information is important and ensures that you install and operate the appliance safely and correctly.

1.1 Proper use

- This appliance is designed for use in a household and in similar areas of application, e. g.:
  - Staff kitchen areas in stores, offices and other work areas
  - In agriculture and in hotels, motels and other accommodation
  - Bed and breakfast locations
  - in catering and related wholesale use
- Other uses:
  - No other application types are permitted.

1.2 Foreseeable Misuse

The following applications are expressly prohibited:

- Storing and cooling of:
  - Chemically unstable, flammable, or corrosive substances
  - Potentially explosive substances, such as aerosol containers with flammable propellant gas
  - Medication, blood plasma, laboratory preparations, or similar substances and products subject to the Medical Devices Directive 2007/47/EC
- Use in potentially explosive atmospheres

Improper use of the appliance will cause the stored food to be damaged or spoil.

1.3 User group

- This appliance is not intended for use by persons (including children) with reduced physical, sensory, or mental capabilities, or by persons lacking experience and knowledge, unless they are supervised or have been instructed in the safe use of the appliance by a person responsible for their safety. Children should be supervised to ensure that they do not play with the appliance.
- Children aged 3 to 8 years may load and unload the refrigerator/freezer.

1.4 Hazards – Warnings for the User

- WARNING: Keep ventilation openings in the appliance housing or built-in structure free from obstructions.
- WARNING: Do not use mechanical devices or other means to accelerate defrosting other than those recommended by the manufacturer.
- WARNING: Do not damage the refrigerant circuit.

- WARNING: Do not operate electrical appliances inside the refrigerator/freezer compartment unless they are of a type recommended by the manufacturer.
- WARNING: When setting up the appliance, make sure that the power cord is not jammed in or damaged.
- WARNING: Do not position portable multiple sockets or power adapters on the rear of the appliance.

After the appliance has been installed, it must still be possible to disconnect the appliance from power.

- Accessible power plug (located above, below, or beside the appliance)
- Triggering a fuse or circuit breaker in the building installation in accordance with installation regulations.



WARNING: Fire hazard/fire-hazardous materials.

You can find the symbol on the compressor and it may also be on other places on the appliance. It indicates a hazard due to flammable materials. Do not remove the label.

- The more refrigerant there is in the appliance, the larger the room in which the appliance is installed must be. If the room is too small, a flammable gas/air mixture may form in the event of a leak. Per 8 g refrigerant, the installation space must be at least 1 m^3 in size. Information on the refrigerant contained can be found on the type plate inside the appliance.
- Regularly clean the surfaces that come into contact with food and accessible drainage systems.
- Package raw meat or fish in clean, closed containers. This will prevent meat or fish from touching or dripping onto other food.
- If the refrigerator/freezer is to remain empty for an extended period, switch off the appliance, defrost it, clean and dry it, and leave the door open to prevent mold growth.
- Avoid prolonged skin contact with cold surfaces or chilled goods. For protection, wear e.g. gloves.
- Make sure that alcoholic beverages or other containers with alcohol are stored tightly sealed. Any leaking alcohol may be ignited by electrical components.
- Only open the door for a short time. This helps you prevent the temperature from increasing in the appliance's interior.
- Do not reach between the door and the appliance when opening and closing. Fingers may get jammed in.
- Do not place any objects in the front area of the bottom glass shelf to ensure that the appliance door closes properly. (see 6.2 Fridge compartment) (see 9.1 Door racks)
- WARNING: Secure the appliance as described in the operating instructions to prevent hazards caused by insufficient stability.
- Observe setup and connection instructions. (see 3 Setting up and connecting)

Appliances with permanent water connection:

- WARNING: Connect the appliance to the drinking water supply only.
- Observe the connection values for the water supply. (see 3 Setting up and connecting)
- Only connect the appliance to the drinking water supply with a new hose kit. Do not reuse old hose kits; recycle them instead.
  A new hose kit is enclosed with the appliance.
- Flush the water system if no water has been removed for more than 5 days.

1.5 Faults, damage and repairs

- Power connection with IEC appliance coupler:
  If the power cord of this appliance is damaged, it must be replaced with a special replacement cord available from the manufacturer or its customer service department. The customer may replace the cord himself/herself.
- Repairs and work on the appliance are only to be undertaken by customer service or other trained specialists.
- Pull the power plug or switch off the fuse in the event of faults and appliance errors. Always hold it by the plug when pulling out the power plug. Do not pull on the cord.

1.6 Disposal Instructions

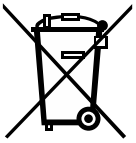

The crossed-out wheeled bin symbol indicates that the appliance must not be disposed of with unsorted municipal waste and must be collected separately for disposal. It contains valuable materials that may be reused or recycled.



The symbol may be on the compressor. It relates to the oil in the compressor and indicates the following danger: **May be fatal if swallowed and if it enters the respiratory tract.** This note is only important for recycling. There is no danger in normal operation.



This or a similar label may be on the rear of the appliance. It indicates that there are vacuum insulation panels (VIP) or perlite panels in the door and/or housing. This note is only important for recycling. Do not remove the label.

- End-of-life appliances must be disposed of properly in accordance with all applicable local regulations and legislation. During transport for disposal, do not damage the refrigeration circuit on the appliance being disposed of to prevent the refrigerant (see the type plate for details) and the oil from escaping uncontrollably.
- Please note that deleting any personal data stored on the appliance is the customer's responsibility.
- For Germany: Dispose of the appliance of free of charge at local recycling centers using the class 1 collection containers. When purchasing a new refrigerator or freezer from a retailer with a sales area exceeding > 400 m^2, the old appliance will also be accepted free of charge.
- EU: Please contact your local authorities for information on the disposal of end-of-life appliances.

1.7 Conformity

The refrigerant circuit has been tested for leaks. The appliance complies with the relevant safety regulations as well as the corresponding directives.

For the EU market:	The appliance complies with Directive 2014/53/EU.
For the GB market:	The appliance complies with Radio Equipment Regulations 2017 SI 2017 No. 1206.

The complete text of the EU Declaration of Conformity is available online at: www.Liebherr.de

The BioFresh compartment complies with the requirements of a chiller compartment in accordance with DIN EN 62552:2020.

1.8 Climate classes

The appliance is designed for operation at limited ambient temperatures depending on climate class. The climate class that applies to your appliance is printed on the type plate.

Note
▶ To ensure flawless operation, observe the specified ambient temperatures.

Climate class	for ambient temperatures of
SN	10 °C to 32 °C
N	16 °C to 32 °C
ST	16 °C to 38 °C
T	16 °C to 43 °C
SN-ST	10 °C to 38 °C
SN-T	10 °C to 43 °C

The appliance is designed for a maximum relative humidity of 80%. If you operate the appliance at a relative humidity of more than 80%, the appliance will function properly, but condensation will form on the top of the appliance.

1.9 SVHC substances in accordance with the REACH Regulation

- Use the link below to check whether you appliance contains SVHC substances in accordance with the REACH Regulation:
  https://go.liebherr.com/z3eewm

1.10 EPREL Database

- Information on energy consumption labeling and ecodesign requirements has been available in the European Product Database (EPREL) since March 1, 2021. Use the following link to access the product database https://eprel.ec.europa.eu/. There, you will be prompted to enter the model ID. You can find the model ID on the type plate.

1.11 Open-source licenses

- The appliance includes software components that make use of open-source licenses. You can find information about the open-source licenses to be used here:
  home.liebherr.com/open-source-licenses

1.12 Spare parts

- Spare parts for functional and storable parts of the equipment are available for 15 years.

1.13 Warning levels

DANGER	Indicates an immediately dangerous situation with, if not avoided, potentially fatal consequences, or which might result in severe injuries.
WARNING	Indicates a dangerous situation with, if not avoided, potentially fatal consequences, or which might result in a severe injury.
CAUTION	Indicates a dangerous situation, which, if not avoided, might result in minor or medium injuries.
ATTENTION	Indicates a dangerous situation, which, if not avoided, might result in property damage.
Note	Refers to useful information and tips.

2 The appliance at a glance

2.1 Delivered contents

Check all parts for transport damage. If you have any complaints, please contact the retailer or customer service. (see 11.4 Customer Service)

Delivery contains the following parts:
- Standalone appliance
- Equipment (depending on your model)
- Installation parts (depending on your model)
- “Quick Start Guide”
- “Installation Guide”*
- Service brochure

2.2 Overview of appliances and equipment

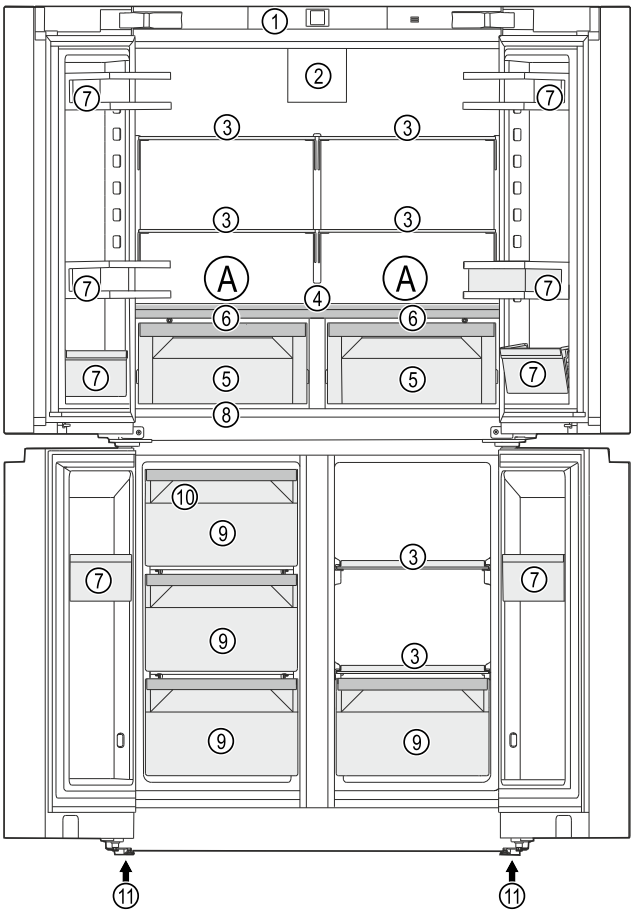

Fig. 1 Example illustration

Temperature range

(A) Coldest zone

Equipment

(1) Controls
(2) Fan with FreshAir activated charcoal filter
(3) Shelf
(7) Door racks
(8) Type plate
(9) Freezer drawer

(4) Variable bottle rack
(5) BioFresh-safe
(6) Lid for BioFresh-safe
(10) IceMaker
(11) Adjustable foot

2.3 VarioTempZone

Your appliance is equipped with a VarioTempZone (-18 °C to +5 °C). This enables you to use an area of the freezer section as another cooling zone.

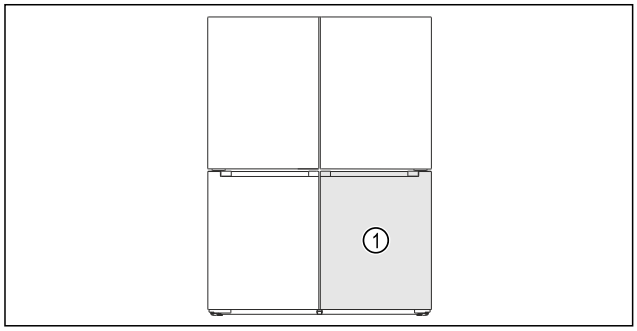

Fig. 2 Example illustration
(1) VarioTempZone

If you use the VarioTempZone as another cooling zone, the appliance may make louder noises. However, the appliance is still fully functional.

More information:

- Setting the temperature in the VarioTempZone. (see Setting the temperature in the VarioTempZone)
- Observe the notes on storing food. (see 6.1 Information regarding storage)

2.4 SmartDevice

SmartDevice is the networking solution for your fridge-freezer.

If your appliance is SmartDevice-enabled or compatible, you can quickly and easily connect your appliance to your WiFi. With the SmartDevice app, you can operate your appliance from a mobile device. Additional functions and setting options are available in the SmartDevice app.

SmartDevice-enabled appliance:	Your appliance is capable of being a SmartDevice. To be able to connect your device to WiFi, you need to download the SmartDevice app.
More information about SmartDevice:	**smartdevice.liebherr.com**
Downloading the SmartDevice app:	After you have installed and configured the SmartDevice app, you can connect your appliance to your WLAN using your SmartDevice app the WLAN device function (see WiFi) .

Note
The SmartDevice function is not available in the following countries: Russia, Belarus, Kazakhstan.

3 Setting up and connecting

3.1 Installation conditions

The installation conditions are crucial to ensure that you can operate your appliance safely, efficiently, and trouble-free.

- Observe all safety instructions.
- Observe the installation location and position in the room.

WARNING
Danger of fire due to incorrect positioning!
If the power supply cable or plug touches the back of the appliance, the vibration can damage the power supply cable or the plug resulting in a short circuit.
▶ Make sure the power supply cable is not trapped under the appliance when you position the appliance.
▶ Install the appliance so that it does not touch any plugs or power cables.
▶ Do not connect any appliances to sockets in the area of the back of the appliance.
▶ Do **not** place and operate power strips/power distributors and other electronic devices (such as halogen transformers) at the back of the appliances.

WARNING
Risk of fire due to moisture!
If live parts or the power cord get wet, this can cause a short circuit.
▶ The appliance is designed for use in enclosed spaces. Do not operate the appliance in open space or in damp areas or where there is spray.

WARNING
Risk of fire due to escaping refrigerant and oil!
The refrigerant inside the appliance is environmentally friendly, but flammable. The oil used is also flammable. If the refrigerant and oil escape in high concentrations and come into contact with an external heat source, they can ignite.
▶ Avoid damaging the refrigerant lines and compressor.

3.1.1 Installation location

- Only set up and used the appliance in enclosed spaces.
- The optimum installation location is a dry and well-ventilated space.
- If the appliance is set up in a very humid environment, condensation may form on the outside of it.
  Always ensure good ventilation at the installation location.
- The more refrigerant there is in the appliance, the larger the room in which the appliance is installed must be. If the room is too small, a flammable gas/air mixture may form in the event of a leak. Per 8 g refrigerant, the installation space must be at least 1 m^3 in size. Information on the refrigerant contained can be found on the type plate inside the appliance.
- The floor at the installation location must be horizontal and level.

3.1.2 Position in the space

- Do no set up the appliance in an area with direct sunlight, next to a heating unit or similar.

- You can set up the appliance directly next to an oven.
- If you set up the appliance directly next to an oven, its energy consumption may increase slightly. This depends on the service life and how often the oven is used.
- Always place the rear of the appliance directly against the wall.
- Use in potentially explosive atmospheres is not permitted.

3.1.3 Fitting into a kitchen unit

- You can convert the appliance with kitchen cabinets. (see 3.12 Fitting the appliance into a kitchen recess)

3.2 Appliance dimensions

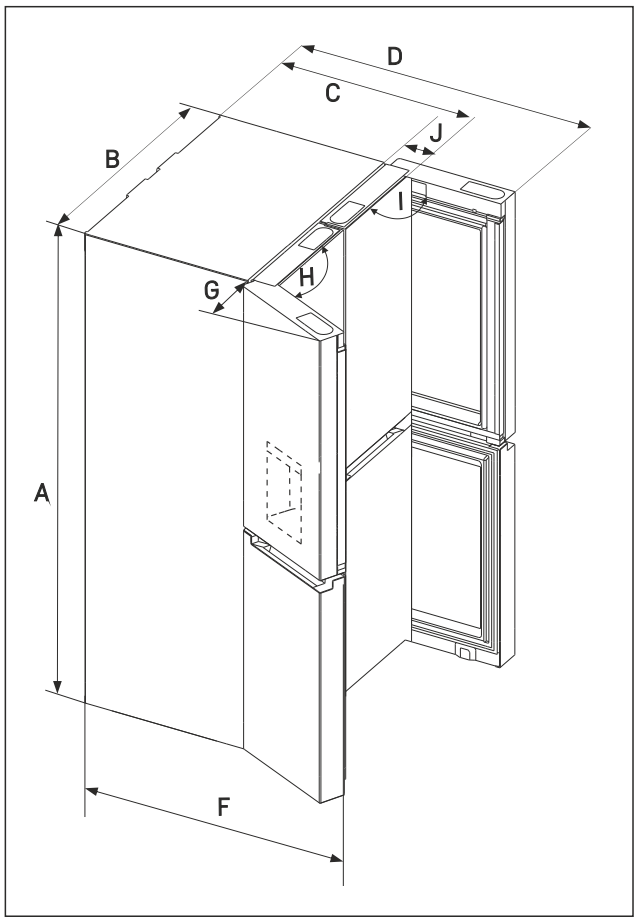

Fig. 3 Appliance with double-door freezer section

(A) Appliance height
(B) Appliance width
(C) Appliance depth
(D) Appliance depth with door open is 90°
(F) Appliance depth with door open is 115°
(G) Door clearance
(H) Door opening angle
(I) Door opening angle
(J) Front thickness

M.. 90.. / MB.. 90..	
A (mm)	1805
B (mm)	906
C (mm)	745
D (mm)	1109
F (mm)	1086
G (mm)	221
H	115°
I	90°

M.. 90.. / MB.. 90..	
J (mm)	110

3.3 Ventilation requirements

NOTICE
Risk of damage due to overheating in the case of insufficient ventilation!
In the case of insufficient ventilation, the compressor can be damaged.
▶ Make sure there is sufficient ventilation.
▶ Observe the ventilation requirements.

If the appliance is integrated into the kitchen cabinet, observe the following ventilation requirements:*

- As a general rule, the larger the ventilation cross-section, the more energy-efficient the appliance operates.*
- Observe the installation dimensions. (see 3.12 Fitting the appliance into a kitchen recess)

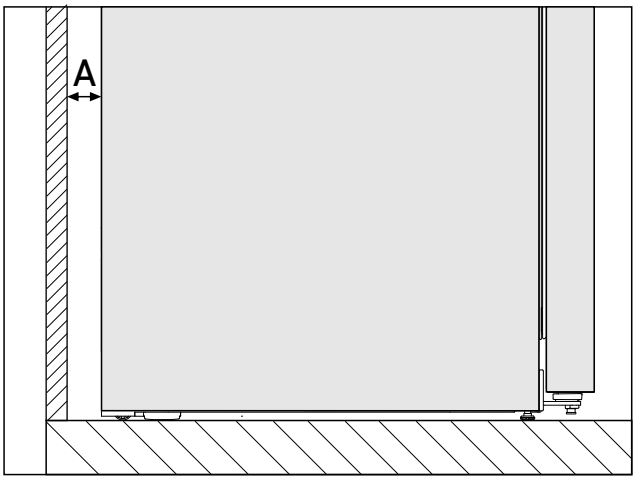

*Fig. 4 **

Wall distance A*
30 mm*

The energy consumption was determined with a wall clearance *Fig. 4 (A)* between the rear of the appliance and the wall. If the clearance to the wall is less than *Fig. 4 (A)*, this has no effect on the functionality of the appliance. If the clearance to the wall is smaller, energy consumption may increase slightly and condensation may form on the rear of the appliance.*

3.4 Connection dimensions for the power supply

The connection for the power supply is on the rear of the appliance. In order for you to be able to safely connect your appliance, make sure that the following requirements are met:

❑ Dimensions for the power supply connection are known and observed. See the table below.
❑ The connection to the power supply is made according to the instructions. (see 3.14 Connecting the appliance to the power supply)

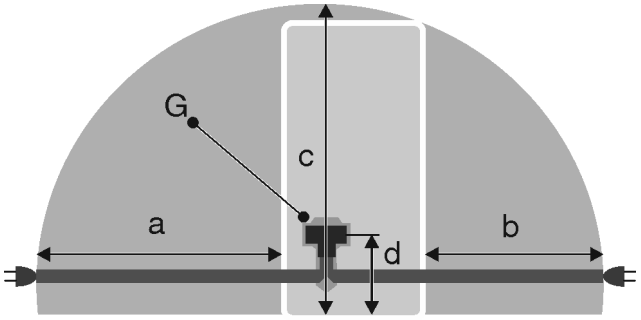

Fig. 5 Fridge/freezer combinations/freezers/full-capacityBio-Fresh appliances

(a) Maximum available length of the power cable
(b) Maximum available length of the power cable
(c) Maximum available vertical length of the power cable
(d) Distance of the appliance plug to the floor
(G) Appliance plug

For 906 mm wide appliances:	
a	~ 2000 mm
b	~ 1300 mm
c	~ 2200 mm
d	~ 148 mm
G	Appliance plug

3.5 Water connection

If your appliance has a fixed water connection, a hose is supplied with it.

Note
You can purchase a hose of a different length as an accessory.

Overview of dimensions for the water connection:	(see 3.5 Water connection)
Requirements for the water pressure:	(see 3.5 Water connection)
Make the water connection:	(see 3.9 Connecting the appliance to the water supply)

3.5.1 Dimensions for the water connection

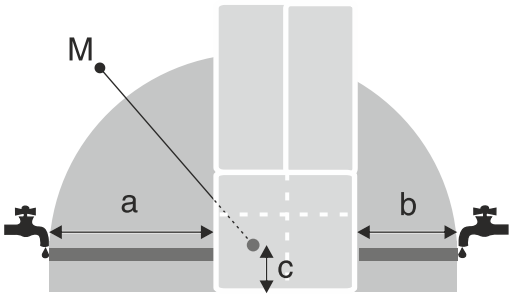

Fig. 6

(a) Maximum available hose length
(b) Maximum available hose length
(c) Distance between solenoid valve and floor
(M) Solenoid valve

a	b	c
~ 1780 mm	~ 1160 mm	~ 114 mm

3.5.2 Water pressure

The water connection line and solenoid valve of the appliance are suitable for a water pressure of up to 1 MPa (10 bar).

To ensure that the appliance functions correctly (flow rate, ice cube size, noise level), maintain the following water pressure:

Water pressure:	
bar	MPa
1.5 to 6.2	0.15 to 0.62

If the pressure is higher than 6.2 bar:
▶ Connect a pressure reducer.
▶ Make the water connection. (see 3.9 Connecting the appliance to the water supply)

3.6 Transporting the appliance

WARNING
Danger of injury and damage due to a heavy appliance! Crushing, fractures, injuries. Damage to appliance and premises. If you are transporting the appliance, e. g. carrying it up a staircase, and the appliance slips from your hand, it may cause injury or damage to property due to its weight.
▶ Always have two people transport the appliance.
▶ Use lashing straps.

3.6.1 Transporting the appliance for initial installation

Make sure that the following requirements are fulfilled:
❑ Appliance is packaged.
❑ The appliance is upright.

▶ Place the lashing straps around the box.
▶ Hold the appliance by the lashing straps.
▶ Have two people transport the appliance.
▶ Unpack the appliance. (see 3.7 Unpacking the appliance)

3.6.2 Transporting the appliance after initial installation

Observer the following instructions if you want to transport or move the appliance after initial installation.

Make sure that the following requirements are fulfilled:
❑ Appliance is empty.
❑ The appliance is upright.
❑ Appliance with door(s): The door is secured against undesired opening.
❑ Appliance with pull-out cart: The pull-out cart is secured against undesired opening.
❑ Appliance with adjustable feet: Adjustable feet are turned in.

▶ Have two people transport the appliance.

After transporting it:
▶ Turn out the adjustable feet on the appliance.
▶ Align the appliance. (see 3.11 Setting up the appliance level)

3.7 Unpacking the appliance

NOTICE
Risk of damage due to the appliance moving!
When moving the appliance on the floor without protection, the appliance may damage the floor.
▶ Sufficiently cover the floor before removing the appliance's packaging.

▶ Inspecting the appliance and packaging: If you suspect transport damage, contact the supplier before connecting the appliance.

NOTICE
Risk of property damage from pointed or sharp objects!
Using pointed or sharp objects to remove packaging materials may damage the appliance.
▶ Do not use pointed or sharp objects to remove packaging materials.

▶ Remove the packaging materials.
▶ Once the appliance is positioned correctly: Remove the protective film from the door and side panels.

The doors are aligned at the plant. If you determine that the vertical door gab or the gap between the fridge section and freezer section is not equal, Liebherr recommends to align the door at a later time.

Tool



3.8.1 Aligning the cooling section

You can align the door at the top hinge angle bracket.

Make sure that the following requirements are fulfilled:

❑ The appliance is set up and aligned. (see 3.10 Setting up the device)

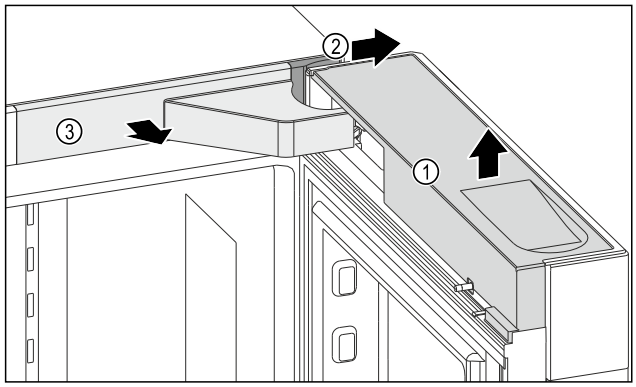

Fig. 7

▶ Open the door.
▶ Remove the cover *Fig. 7 (1)*.
▶ Remove the cover *Fig. 7 (2)*.
▶ Remove the cover *Fig. 7 (3)*.

WARNING
Risk of injury if the door falls out!
The door may fall out if you completely remove the screws on the hinge. This may lead to sever injuries.
▶ Loosen the screws and do not remove the screws completely.
▶ Hold the door.

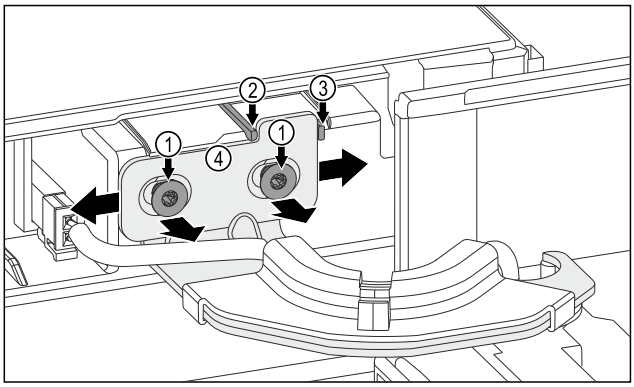

Fig. 8

▶ Loosen both screws *Fig. 8 (1)*.
▶ Slide the door to the right: Remove the safety knob *Fig. 8 (3)*.

-or-

▶ Slide the door to the left: Remove the safety knob *Fig. 8 (2)*.

▶ Slide the door.
▶ The door's end position is reached: Tighten both screws *Fig. 8 (1)*.
▷ The door is aligned.
▶ Attach the covers.

3.8.2 Aligning the freezer section door

You can align the door at the bottom hinge angle bracket.

Make sure that the following requirements are fulfilled:

❑ The appliance is set up and aligned. (see 3.10 Setting up the device)

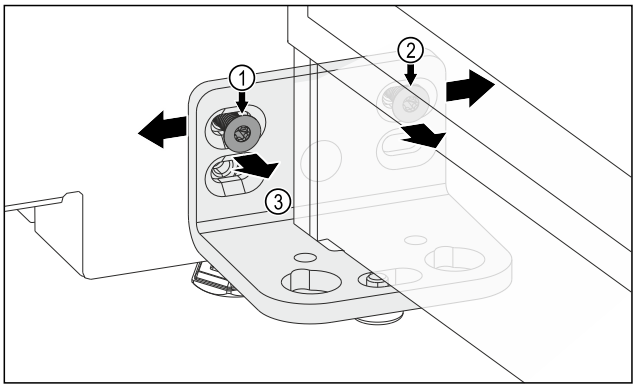

Fig. 9

▶ Open the door.
▶ Loosen screw *Fig. 9 (1)* and screw *Fig. 9 (2)*. For screw *Fig. 9 (2)* you need a short hex key.
▶ Slide the door with the hinge angle bracket *Fig. 9 (3)* to the left.

-or-

▶ Slide the door with the hinge angle bracket *Fig. 9 (3)* to the right.

▶ The door's end position is reached: Tighten screw *Fig. 9 (1)* and screw *Fig. 9 (2)*.
▷ The door is aligned.

3.9 Connecting the appliance to the water supply

Make sure that the following requirements are fulfilled:

❑ The dimensions for the water supply connection are known and complied with.
❑ The correct water pressure is maintained.

- ❑ Water is supplied to the appliance via a cold water pipe that can withstand the operating pressure and is connected to the drinking water supply.
- ❑ All equipment and devices used for the water supply comply with the applicable regulations in the country of use.
- ❑ The back of the appliance is accessible so that you can connect the appliance to the drinking water supply.
- ❑ You are using the supplied hose. Old hoses have been disposed of.
- ❑ The hose connector contains a screen filter with a seal.
- ❑ There is a faucet between the hose line and the domestic water connection so that you can turn off the water supply if necessary.
- ❑ The faucet is not directly behind the appliance and is easily accessible. This way, you can push the appliance as close as possible to the wall and can quickly turn off the faucet if necessary.

WARNING
Risk of electric shock from water!
- ▶ Before connecting to the water hose: Disconnect the appliance from the mains.
- ▶ Before connecting to water lines: Shut off the water supply.
- ▶ Make sure that only qualified personnel connect the device to the drinking water supply.

WARNING
Risk of poisoning due to contaminated water!
- ▶ Connect to potable water supply only.

3.9.1 Connecting the hose

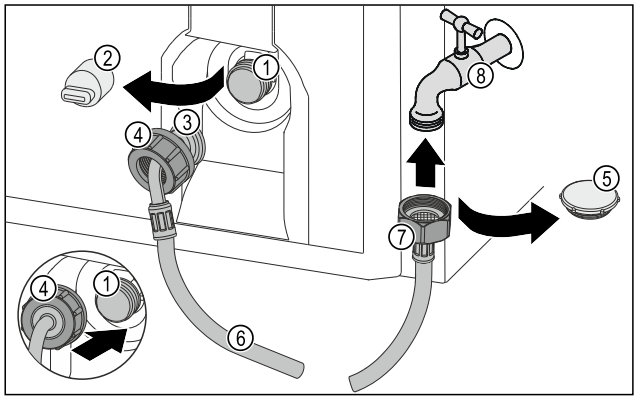

Fig. 10

(1) Solenoid valve: The solenoid valve is on the rear of the appliance. It has an R3/4 connection thread.
(2) Cover
(3) Angled hose end
(4) Nut
(5) Cap
(6) Hose
(7) Straight hose end
(8) Faucet

NOTICE
Risk of damage from incorrect installation!
- ▶ Do not damage or kink the hose.
- ▶ Do not damage or kink the hose when setting up the appliance.

Connecting the hose to the appliance:
- ▶ Pull off the cover *(2)*.
- ▶ Push and hold the nut *(4)* all the way over the angled hose end *(3)*.

NOTICE
The solenoid valve will not be tight if the thread is damaged! If the solenoid valve is not tight, water may leak out.
- ▶ Observe the following instructions for fitting the nut on the solenoid valve.

- ▶ Carefully position and hold the nut *(4)* on the solenoid valve *(1)*.
- ▶ Screw in the nut *(4)* by hand straight onto the thread until a safe and tight fit is reached.
- ▷ The hose is connected to the appliance.

Connecting the hose to the faucet:
- ▶ Remove the cap *Fig. 10 (5)*.
- ▶ Attach the straight end of the hose *Fig. 10 (7)* to the faucet *Fig. 10 (8)*.
- ▶ Tighten the nut on the straight hose end of the hose *Fig. 10 (7)* in clockwise direction.
- ▷ The hose is connected to the faucet.

3.9.2 Check the water system

Before you completely install the appliance, Liebherr recommends checking the water system for leaks.
- ▶ Slowly turn on the faucet.
- ▶ Check the hose, water feed and connections for leaks.
- ▷ The water system has now been checked for leaks.
- ▷ The water system is not leaking: You can install up the appliance completely.

Note
IceMaker: Before the first use, you must clean the IceMaker. (see Quick Start Guide or operating instructions)

3.10 Setting up the device

CAUTION
Risk of injury due to heavy appliance!
- ▶ Have two people transport the appliance to its installation site.

WARNING
Risk of fire from short circuit!
- ▶ When setting up the appliance: Do not kink, trap, or damage the power cable.
- ▶ Do not operate the appliance with a defective power cable.

WARNING
Danger of fire and damage!
- ▶ Do not place devices that give off heat, e.g. microwaves, toasters, etc. on the appliance.

Make sure that the following requirements are fulfilled:
- ❑ Only move the appliance when it is not loaded.
- ❑ Always have someone to help when installing the appliance.

- ▶ Remove the power cable from the enclosed package.
- ▶ Fully insert the IEC socket of the power cable completely into the appliance plug on the rear side of the appliance. Ensure the IEC socket is firmly in place.
- ▶ If necessary, use a string to route the power plug to a socket outlet that is freely accessible.

3.11 Setting up the appliance level

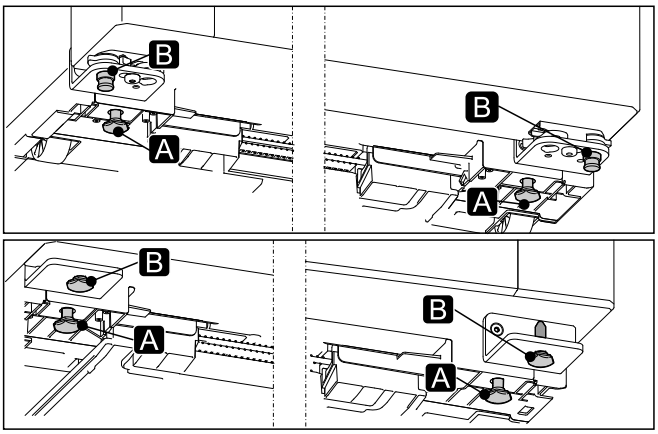

Fig. 11

▶ Unscrew the adjustable feet *(A)* using the open-end wrench provided and a spirit level until the appliance is firmly aligned and level.
▷ Appliance is aligned.

CAUTION
Danger of injury and damage if the appliance tips over!
The appliance may tip over if the adjustable foot **B** on the bottom swap bearing block does not rest properly on the floor. This may result in damage or injuries.
▶ Turn out the adjustable foot **B** on the swap bearing block as per the instructions.

▶ Unscrew the adjustable foot *(B)* at the swap bearing block using the open-end wrench provided until it rests on the floor.
▶ Turn the adjustable foot *(B)* another maximum of 90° to prevent damage to the door.
▷ The appliance is secured against tipping.

3.12 Fitting the appliance into a kitchen recess

You can fit the appliance into a kitchen recess. (see Fig. 12)

To do this, position the appliance in a kitchen recess so that it protrudes from the kitchen recess by the thickness of the front. (see Fig. 13)

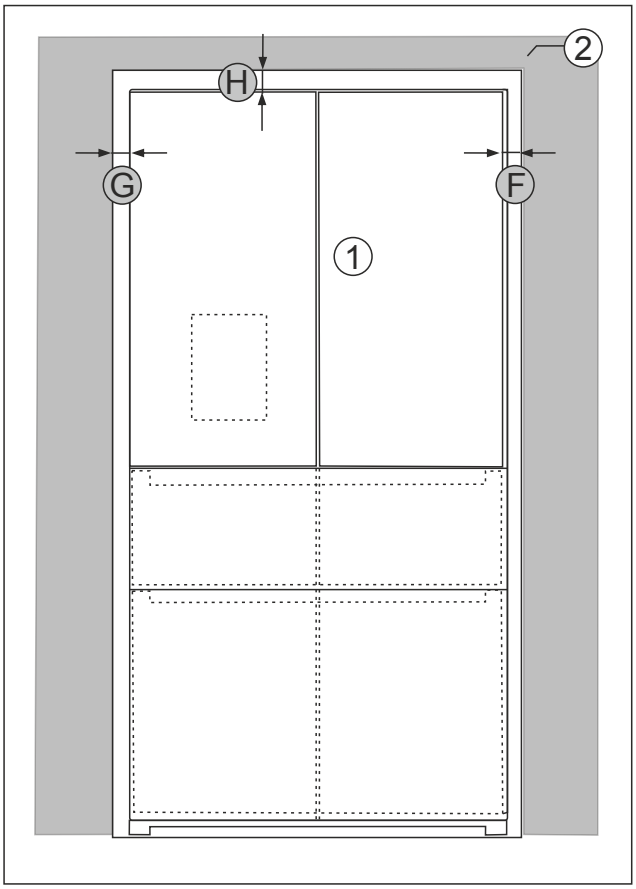

Fig. 12 Fully surrounded by kitchen cabinets

(1) Appliance
(2) Kitchen cabinet
(F) Distance to the right side of the appliance
(G) Distance to the left side of the appliance
(H) Distance to the top

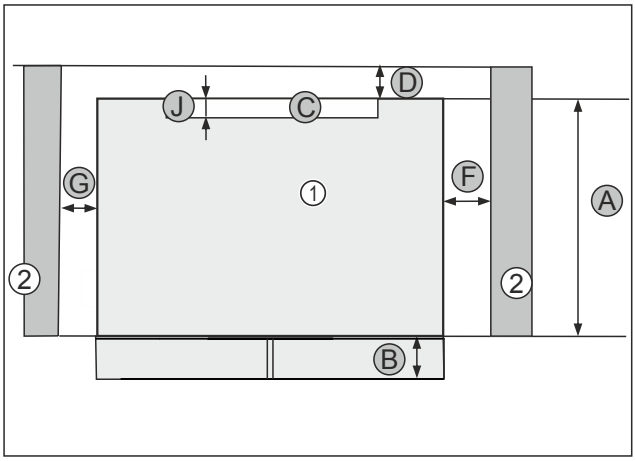

Fig. 13 Top view

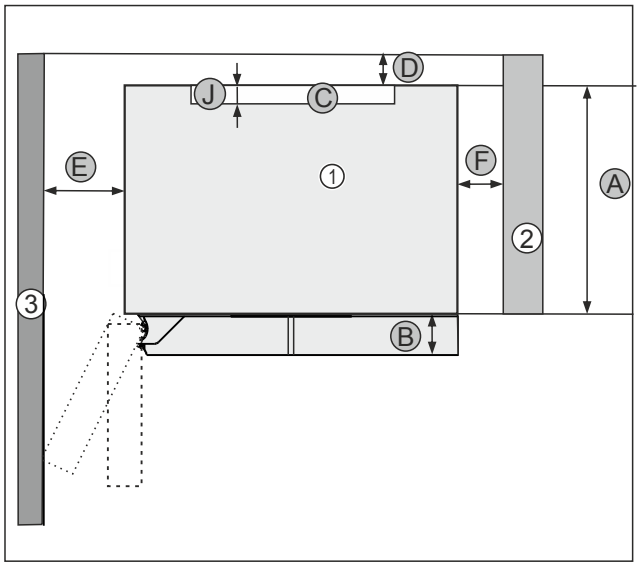

Fig. 14 Example illustration with a wall on the left

(1) Appliance
(2) Kitchen cabinet
(3) Wall
(A) Appliance depth
(B) Door depth
(C) Ventilation cross-section
(D) Distance of the rear of the appliance to the wall
(E) Distance of the appliance side to the wall
(F) Distance to the right side of the appliance
(G) Distance to the left side of the appliance
(J) Depth of the ventilation cross-section

Installation dimensions	
A	635 mm
B	110 mm
C	At least 300 cm^2
D	30 mm
E	100 mm with 90° door opening angle
E	220 mm with 115° door opening angle
E	230 mm to an exterior wall
F	at least 4 mm
G	at least 4 mm
H	at least 25 mm
J	at least 50 mm

WARNING
Risk of fire from short circuit!
▶ When setting up the appliance: Do not kink, trap, or damage the power cable.
▶ Do not operate the appliance with a defective power cable.

Make sure that the following requirements are fulfilled:
❑ Outlet is easily accessible and is not behind the appliance.
❑ Connection dimensions are taken into account. (see 3.14 Connecting the appliance to the power supply)
❑ Wall spacer brackets are mounted. (see 3.14 Connecting the appliance to the power supply)
▶ Push the appliance into the kitchen recess.

3.13 After setting up

▶ Remove all transport safety parts on the inside.

NOTICE
Risk of property damage from pointed or sharp objects!
Using pointed or sharp objects to remove packaging materials may damage the appliance.
▶ Do not use pointed or sharp objects to remove packaging materials.

▶ Remove the protective film on the inside: Peel the film back flat along the component to minimize the film's adhesive force.
▶ Clean the appliance. (see 10.8 Cleaning the appliance)
▶ Make a note of the type (model, number), appliance designation, appliance/serial number, date of purchase, and the address of the retailer.

3.14 Connecting the appliance to the power supply

WARNING
Danger of electric shock and injury due to damaged appliance or damaged mains cable!
Cuts and fatal injury. If the appliance or the mains cable is damaged during transport, you may be electrocuted. You could also cut yourself on damaged parts of the appliance housing.
▶ Check the appliance and the mains cable for damage after transport.
▶ Never put the appliance into operation if the appliance or the mains cable are damaged.
▶ Contact Customer Service.

You can connect your appliance to the mains using the power cable supplied separately. The mains power cable has an appliance coupler at one end and a mains plug at the other end.

Make sure that the following requirements are fulfilled:
- The appliance and power cable are undamaged.
- The appliance is set up in accordance with the regulations. (see 3.10 Setting up the device)
- Requirements for the electrical connection are met.
- Dimensions for connection in accordance with regulations are known and observed. (see 3.4 Connection dimensions for the power supply)
- Mains voltage and frequency correspond to the specifications on the type plate.
- The socket is grounded and fused in accordance with regulations.
- The tripping current for the fuse is between 10 A and 16 A.
- Outlet is easily accessible and is not behind the appliance. (see 3.4 Connection dimensions for the power supply)

NOTICE
Danger of damage to incorrect operation!
Damage to the electrical components of the appliance.
▶ Only use the supplied power cable.

WARNING
Danger of fire due to incorrect connection!
Burns.
Damage to the appliance.
▶ Do not use an extension cord.
▶ Do not use a multipoint connector strip.

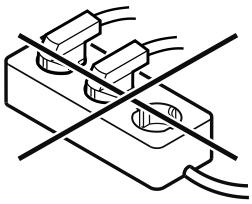

NOTICE
Danger of damage to incorrect connection!
Damage to the appliance.
▶ Do not connect the appliance to a stand-alone inverter, e.g. solar power systems and petrol generators.

▶ Connect the mains plug of the power cord to the power supply. Ensure the main plug is firmly plugged into the outlet.
▷ If no action is taken within 60 seconds: Standby symbol fades or disappears.
▷ Appliance is connected. For initial commissioning, see the next chapter or the operating instructions.

3.15 Disposal of packaging

WARNING
Danger of suffocation from packaging materials and films!
▶ Do not allow children to play with packaging materials.

The packaging is made from recyclable materials:
- Corrugated card/cardboard
- Parts made of foamed polystyrene
- Films and bags from polyethylene
- Packing bands from polypropylene
- Wood frame nailed together with a polyethylene window*

▶ Take the packaging material to an official collection point.

4 Functionality of the Touch & Swipe display

You operate your appliance using the Touch & Swipe display. You select appliance functions in the Touch & Swipe display (hereafter referred to as display) by tapping them. If you do not perform any action on the display for 10 seconds, the display either jumps back to the higher-level menu or directly to the status display.

4.1 Navigation and symbol explanation

In the illustrations, different symbols are used to navigate the display. The following table describes these symbols.

Symbol	Description
	**Briefly touch the display:** Activates/deactivates function. Confirms selection. Opens submenu.
	**Touch the display for a specified time (e.g. 3 seconds):** Activates/deactivates function or value.
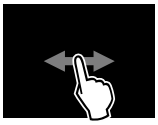	**Swipe left or right:** Navigate in the menu.
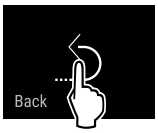	**Briefly touch the Back symbol:** Jumps back one menu level.
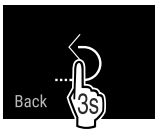	**Press and hold the Back symbol for 3 seconds:** Jumps back to the status display.
	**Briefly touch the Back symbol at the top left:** Jumps back one menu level.
	**Arrow with clock:** It takes more than 10 seconds for the following message to appear in the display.
	**Arrow with a time indication:** It takes the specified amount of time until the following message appears in the display.
	**“Open Settings menu” symbol:** Navigates to the Settings menu and opens the settings menu. If necessary: Navigate to the desired function in the Settings menu. (see 4.2.1 Opening the Settings menu)
	**“Open Advanced menu” symbol:** Navigates to the Advanced menu and opens the advanced menu. If necessary: Navigate to the desired function in the Advanced menu. (see 4.2.2 Opening expanded menu)
No action for 10 seconds	If you do not perform any action on the display for 10 seconds, the display either jumps back to the higher-level menu or directly to the status display.
Close door and open it again.	If you close the door and immediately open it again, the display jumps directly back to the status display.

Note: Illustrations of the display are shown in the English version.

4.2 Menus

The appliance functions are distributed over various menus:

Menu	Description
Main menu	When you switch the appliance on, you are automatically in the main menu. From here you can navigate to the most important appliance functions, to the Settings menu and to the Advanced menu.

Menu	Description
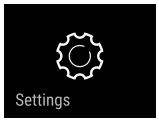 Settings menu	The Settings menu contains additional appliance functions for setting up your appliance.
 Advanced menu	The advanced menu contains special appliance functions for setting up your appliance. Access to the Advanced menu is protected by the numerical code **1 5 1**.

4.2.1 Opening the Settings menu

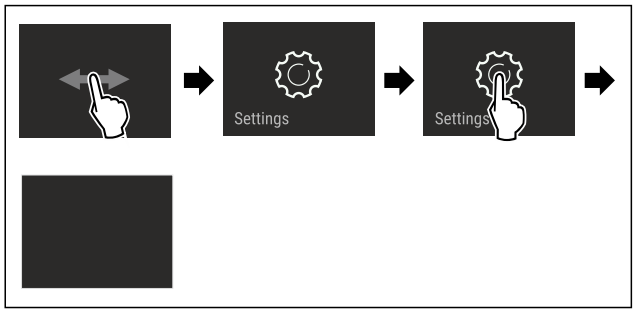

Fig. 15 Example illustration

▶ Carry out action steps according to the illustration.
▷ Settings menu is open.
▶ If necessary: Navigate to the desired function.

4.2.2 Opening expanded menu



Fig. 16

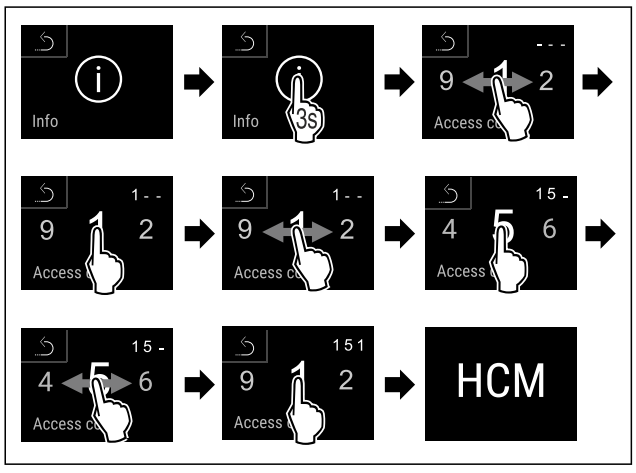

*Fig. 17 Example illustration, access with numerical code **151***

▶ Carry out action steps according to the illustration.
▷ Expanded menu is open.
▶ If necessary: Navigate to the desired function.

4.3 Sleep mode

If you do not touch the display for 1 minute, the display switches to sleep mode. In sleep mode, the display brightness is dimmed.

4.3.1 Ending sleep mode

▶ Touch the display briefly with your finger.
▷ Sleep mode is ended.

5 Start-up

5.1 Switching on appliance (first use)

Make sure that the following requirements are fulfilled:

❑ The appliance has been installed and connected in accordance with the installation instructions.
❑ All adhesive strips, adhesive and protective films and transport locks are removed from inside and on the appliance.
❑ All marketing leaflets are removed from the drawers.
❑ You are familiar with the functionality of the Touch & Swipe display. (see 4 Functionality of the Touch & Swipe display)

Switch on the appliance using the Touch & Swipe display.

▶ If the display is in sleep mode: Briefly touch the display.
▶ Carry out action steps according to the illustration.

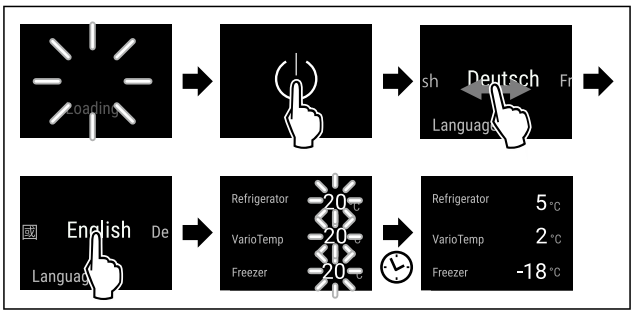

Fig. 18 Example illustration

▷ Status display appears.
▷ The appliance cools to the temperature set at the factory.
▷ The appliance starts in demo mode (status display with DEMO appears): If the appliance starts in demo mode, you can deactivate demo mode within the next 5 minutes. (see Demo mode)

More information:

- Start the IceMaker for the first time. (see 5.2 Starting the IceMaker for the first time)
- Start the SmartDevice for the first time. (see 2.4 SmartDevice) and (see WiFi)

Note
The manufacturer recommends:
▶ Stock with food: Wait for around 6 hours until the set temperature is reached.
▶ **Store frozen foods** at -18 °C or colder.
▶ Observe the notes on storing food. (see 6.1 Information regarding storage)

Note
Accessories can be purchased from the Liebherr-Hausgeräte store at go.liebherr.com/47wtc4.

5.2 Starting the IceMaker for the first time

If your appliance is equipped with IceMaker, you must clean the IceMaker **before using it for the first time**.

Make sure that the following requirements are fulfilled:

❑ The water supply has been connected. See Installation Guide or mounting instructions.
❑ The appliance is properly connected.

▶ Clean the IceMaker. (see 10.8.5 Cleaning the IceMaker)

6 Storage

6.1 Information regarding storage

WARNING
Risk of fire from electrical appliances!
If you use electrical devices in the food area of your appliance, they may case a fire.
▶ Do not use electrical devices in the food area of the appliance if they have not been recommended by the manufacturer.

Note
Insufficient ventilation results in an increase in energy consumption and reduction of the refrigerating performance
▶ Always keep the air slots unobstructed.

Observe the following specifications for storage:
- Keep the air vents on the fan free.
- In the freezer compartment: Package food properly.
- Package or cover foods that readily take on or give off odors or taste in closed containers.
- Keep liquids in closed containers.
- Leave space between goods to ensure good air circulation.
- Store food according to the instructions on the packaging.
- Always observe the best-before date indicated on the packaging.

Note
Failure to follow these guidelines can lead to foodstuffs spoiling.

Temperature zone	Food	
VarioTempZone	Store food according to the set temperature. Liebherr recommends storing food in the VarioTempZone:	
	Temperature range	**Food**
	4 °C to 5 °C	Pre-cooked meals, cheese, canned food
	0 °C	Packaged fruit and vegetables
	-2 °C	Fresh fish and seafood
	-18 °C	See freezer section

Overview of VarioTempZone

6.2 Fridge compartment

The air circulation in the appliance creates different temperature zones. You will find the different temperature zones in the appliance and equipment overview. (see 2.2 Overview of appliances and equipment)

6.2.1 Arranging your food properly

CAUTION
Risk of damage and/or injury due to improperly placed food or items!
If you place food or items on the lowest glass shelf, the door may not close properly. This may cause the door rack to break, allowing food or other items to fall out and cause injury.
▶ Keep the front area of the lowest glass shelf clear.

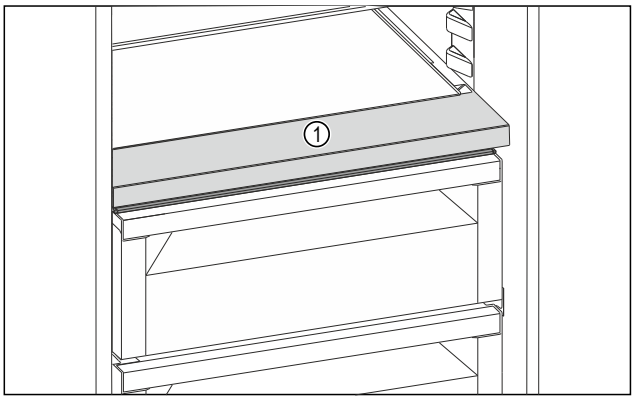

Fig. 19 Example illustration
(1) Front area
▶ Upper area and door: Store butter, cheese, canned food and tubes.
▶ Coldest temperature zone: Store perishable foods such as pre-cooked meals.

6.3 BioFresh

BioFresh will extend the storage time for some fresh foods compared to traditional refrigeration.

Note
If the temperatures drop below 0 °C foods may freeze to each other.
▶ Store cold-sensitive produce such as cucumbers, eggplants, zucchinis and tropical fruit in the fridge compartment.

6.3.1 Fruit & Vegetable safe

This safe creates a climate of close to 0 °C. The compartment lid ensures constant levels of humidity. This storage climate is suitable for storing unpackaged food with high intrinsic moisture (for example, lettuce, vegetables, fruit).

The humidity in the compartment depends on the moisture content of the chilled goods placed in it, and also depends on how often the compartment is opened. You can regulate the humidity level.

Arranging your food properly

▶ Store unpackaged fruit and vegetables.
If the humidity is too high:
▶ Regulate the humidity.

6.3.2 Meat & Dairy safe

This safe creates a storage climate of close to 0 °C. This storage climate is suitable for more sensitive foods (e.g. dairy products, meat, fish, sausage).

Arranging your food properly

▶ Store dry or packaged food.

6.4 Freezer compartment

Here, a dry, frosty storage climate is created at -18 °C. The frosty storage climate is suitable for storing frozen food for several months, for making ice cubes or freezing fresh food.

6.4.1 Freezing food

Freezing quantity

The maximum amount of fresh food that you can freeze within 24 hours is specified on the type plate (see 11.5 Rating plate) under “Freezing capacity ... kg/24h.”

To ensure that food quickly freezes through, adhere to the following quantities per package:

- Fruit and vegetables up to 1 kg
- Meat up to 2.5 kg

Freezing food using SuperFrost

Depending on the amount of food to be frozen, you can activate SuperFrost before freezing to reach lower freezing temperatures. (see SuperFrost)

▶ Activate SuperFrost if the amount of food you have to freeze is more than approx. 2 kg.

The time at which you activate SuperFrost depends on the amount of food you have to freeze:

Freezing quantity	Time at which you should activate SuperFrost
Small amount of food to freeze	Activate SuperFrost about 6 hours before freezing. As soon as the appliance automatically deactivates SuperFrost you can begin rearranging your food items.
Maximum amount of food to freeze	Activate SuperFrost about 24 hours before freezing. As soon as the appliance automatically deactivates SuperFrost you can begin rearranging your food items.

Arranging your food properly

CAUTION

Risk of injury from broken glass!
Bottles and cans with beverages can burst during freezing. This applies in particular to carbonated beverages.

▶ Only freeze bottles and cans with beverages if you have activated the BottleTimer function in the SmartDevice app.

Freezing quantity	Arranging your food properly
Small amount of food to freeze	Place packaged food in the top drawer. If possible, place groceries at the back of the drawer near the rear wall.
Maximum amount of food to freeze	Distribute packaged groceries throughout all drawers, but only store food that is already deep frozen in the bottom drawer. If possible, place groceries at the back of the drawer near the rear wall.

6.4.2 Defrosting food

WARNING

Danger of food poisoning!

▶ Do not re-freeze defrosted food.
▶ Use defrosted foodstuff as quickly as possible.

You can defrost food in several ways:

- In the fridge compartment
- In the microwave
- In the oven/fan-assisted oven
- At room temperature

▶ Take out only as much food as necessary.

6.5 Storage times

The storage times given are guidelines

Food with a “use by” date must still be consumed by the date indicated on the package

6.5.1 Fridge

The best-before date stated on the packaging applies.

6.5.2 BioFresh

Guideline storage times for the Meat & Dairy-Safe		
Butter	at 1 °C	up to 90 days
Hard cheese	at 1 °C	up to 110 days
Milk	at 1 °C	up to 12 days
Sausage, cold cuts	at 1 °C	up to 8 days
Poultry	at 1 °C	up to 6 days
Pork	at 1 °C	up to 6 days
Beef	at 1 °C	up to 6 days
Game	at 1 °C	up to 6 days

Note

▶ Note that higher-protein foods spoil more quickly So, shellfish and crustaceans perish faster than fish, and fish perishes faster than meat.

Guideline storage times for the Fruit & Vegetable-Safe		
Vegetables, lettuce		
Artichokes	at 1 °C	up to 14 days
Celery	at 1 °C	up to 28 days
Cauliflower	at 1 °C	up to 21 days
Broccoli	at 1 °C	up to 13 days
Endives	at 1 °C	up to 27 days
Mâche	at 1 °C	up to 19 days
Peas	at 1 °C	up to 14 days
Kale	at 1 °C	up to 14 days
Carrots	at 1 °C	up to 80 days
Garlic	at 1 °C	up to 160 days
Cabbage turnip	at 1 °C	up to 14 days
Iceberg lettuce	at 1 °C	up to 13 days
Herbs	at 1 °C	up to 13 days

Guideline storage times for the Fruit & Vegetable-Safe		
Leeks	at 1 °C	up to 29 days
Mushrooms	at 1 °C	up to 7 days
Radishes	at 1 °C	up to 10 days
Brussels sprouts	at 1 °C	up to 20 days
Asparagus	at 1 °C	up to 18 days
Spinach	at 1 °C	up to 13 days
Savoy cabbage	at 1 °C	up to 20 days
Fruit		
Apricots	at 1 °C	up to 13 days
Apples	at 1 °C	up to 80 days
Pears	at 1 °C	up to 55 days
Blackberries	at 1 °C	up to 3 days
Dates	at 1 °C	up to 180 days
Strawberries	at 1 °C	up to 7 days
Figs	at 1 °C	up to 7 days
Blueberries	at 1 °C	up to 9 days
Raspberries	at 1 °C	up to 3 days
Red currants	at 1 °C	up to 7 days
Cherries, sweet	at 1 °C	up to 14 days
Kiwi	at 1 °C	up to 80 days
Peaches	at 1 °C	up to 13 days
Plums	at 1 °C	up to 20 days
Cranberries	at 1 °C	up to 60 days
Rhubarb	at 1 °C	up to 13 days
Gooseberries	at 1 °C	up to 13 days
Grapes	at 1 °C	up to 29 days

6.5.3 Freezer

Guidelines for storage periods for various foods		
Ice cream	at -18 °C	2 to 6 months
Sausage, ham	at -18 °C	2 to 3 months
Bread, bakery products	at -18 °C	2 to 6 months
Game, pork	at -18 °C	6 to 9 months
Fish, fatty	at -18 °C	2 to 6 months
Fish, lean	at -18 °C	6 to 8 months
Cheese	at -18 °C	2 to 6 months
Poultry, beef	at -18 °C	6 to 12 months
Vegetables, fruit	at -18 °C	6 to 12 months

7 Energy saving

- Always ensure good ventilation. Do not obstruct ventilation openings or grilles.
- Never block air slits in the fan.
- Do no set up the appliance in an area with direct sunlight, next to a heating unit or similar.
- If you set up the appliance directly next to an oven, its energy consumption may increase slightly. This depends on the service life and how often the oven is used.
- Energy consumption depends on installation conditions such as the ambient temperature . A warmer ambient temperature can increase the energy consumption.
- Avoid opening the appliance door for any longer then necessary
- The lower the temperature is set the higher the energy consumption.
- Sort your food items: home.liebherr.com/food.
- All food stored in the appliance should be well wrapped and covered. This prevents frost buildup.
- Only take food out for as long as necessary so that it does not get too warm.
- Insertion of warm foods: first let the food cool down to room temperature.
- Defrost frozen food in the fridge
- For longer periods of absence, use HolidayMode (see HolidayMode) .

8 Use

8.1 Controls and displays

8.1.1 Status display

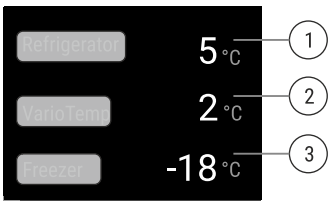

Fig. 20 Status display shows the actual temperature.

(1) Temperature display fridge section
(2) Temperature display VarioTempZone
(3) Temperature display freezer section

The status display shows the actual temperature and is the initial display. You can navigate from there to the functions and settings.

8.1.2 Display symbols

The display symbols provide information about the current appliance status.

Symbol	Appliance status
	**Standby** The appliance or temperature zone is turned off.
	**Flashing number** Appliance is working. Temperature flashes until the set temperature is reached.
	
	**Flashing symbol** Appliance is working. Setting is made.
	
	**"D" in the status display** Demo mode is active.

Symbol	Appliance status
	**IceMaker symbol in the status display** IceMaker is active.
	**WLAN symbol in status display** WLAN is active.

8.2 Appliance functions

8.2.1 Notes on the appliance functions

The appliance functions are set at the factory so that your appliance is fully functional.

Before you alter, activate or deactivate the appliance functions, make sure that the following requirements are met:

- ❑ You have read and understood the descriptions of how the display works. (see 4 Functionality of the Touch & Swipe display)
- ❑ You have familiarized yourself with the operating and display elements of your appliance.

Switching appliance off and on

This function switches the entire appliance on and off.

Switching off the appliance

If you switch off the appliance, the settings that were made before remain stored.

Make sure that the following requirements are fulfilled:

- ❑ Handling instructions (see 12 Decommissioning) have been completed.

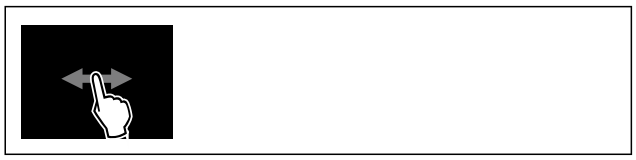

Fig. 21

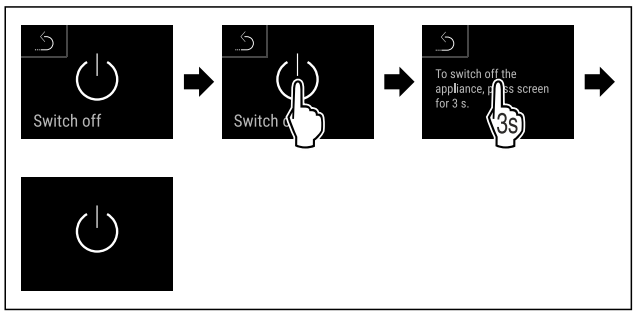

Fig. 22

▶ Carry out action steps according to the illustration.
▷ Appliance is switched off.
▷ Standby symbol appears in the display.
▷ Display turns black.

Switching on the appliance

If the display is in sleep mode:

▶ Briefly touch the display.

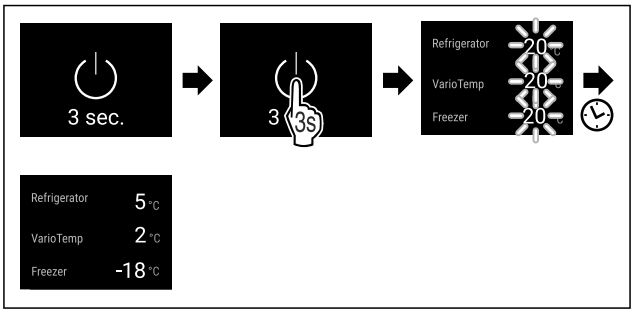

Fig. 23 Example illustration

▶ Carry out action steps according to the illustration.
If the appliance starts in demo mode:
▶ Deactivate demo mode. (see Deactivating demo mode)
▷ Appliance is switched on.
▷ Previously made settings are re-established.
▷ The appliance cools to the set target temperature.

Switching temperature zone off and on

You can switch temperature zones of the appliance off independently.

Switching the fridge compartment off

Make sure that the following requirements are fulfilled:

- ❑ Refrigerator compartment has been emptied.

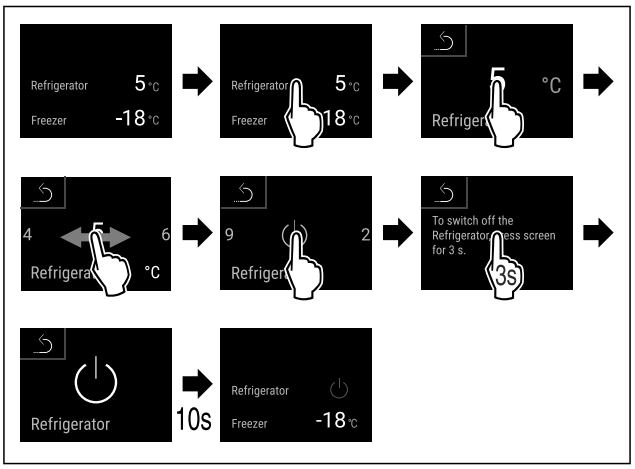

Fig. 24 Example illustration

▶ Carry out action steps according to the illustration.
▷ Refrigerator compartment is switched off.

Switching the fridge compartment on

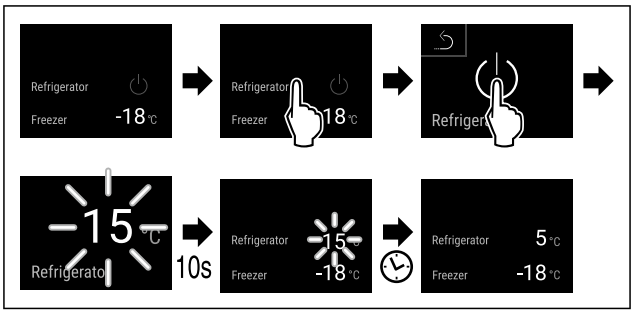

Fig. 25 Example illustration

▶ Carry out action steps according to the illustration.
▷ Refrigerator compartment is switched on.
▷ The appliance cools to the last set temperature.

Temperature

Use this function to set the temperature.

The temperature depends on the following factors:
- How often the door is opened
- How long the door is open
- The room temperature of the installation site
- Type, temperature and amount of food

Temperature zone	Factory-set temperature	Recommended setting
5 °C Fridge section	4 °C	4 °C
-18 °C Freezer section	-18 °C	-18 °C
0 °C BioFresh	0 °C	B-Value (see BioFresh B-Value)
-18 °C VarioTempZone	-18 °C	Depending on the use of the Vario-TempZone (see 2.3 Vario-TempZone)

Setting the temperature in the fridge section

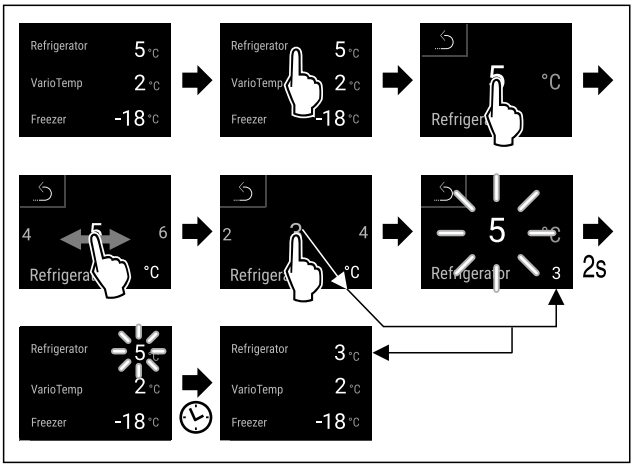

Fig. 26 Example illustration

▶ Carry out action steps according to the illustration.
▷ Temperature is set.

Setting the temperature in the freezer section

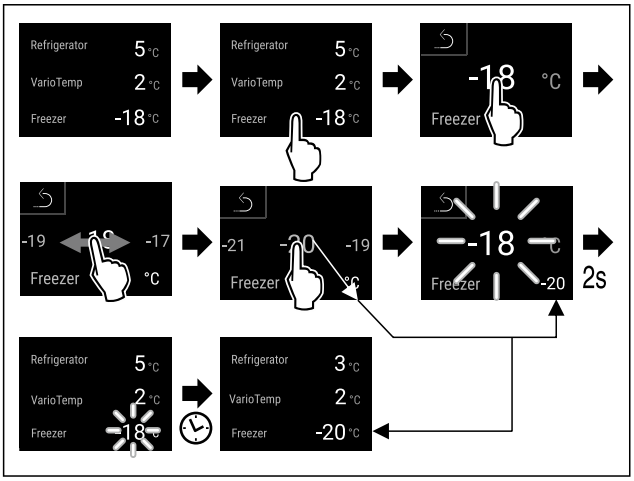

Fig. 27 Example illustration

▶ Carry out action steps according to the illustration.
▷ Temperature is set.

Setting the temperature in BioFresh

You set the temperature using the **BioFresh B-Value**. (see BioFresh B-Value)

Setting the temperature in the VarioTempZone

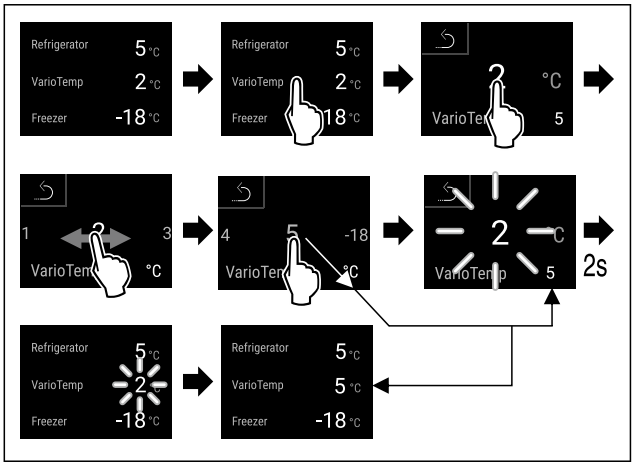

Fig. 28 Example illustration

▶ Carry out action steps according to the illustration.
▷ Temperature is set.

BioFresh B-Value

Use this function to set the BioFresh B-Value. Use the BioFresh B-Value to adjust BioFresh slightly warmer or colder if a higher or lower ambient temperature makes it necessary. Upon delivery, the BioFresh B-Value is set to the value B5. If you adjust the B-Value, please observe the following table:

Value	Description
B1	Lowest temperature
B1-B4	The temperature can drop below 0 °C which means foods can easily freeze.*
B5	Pre-set temperature
B9	Highest temperature

Setting the BioFresh B-Value



Fig. 29

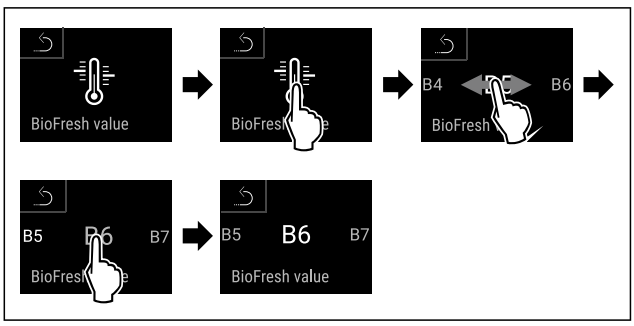

Fig. 31 Example illustration: Switching from B5 to B6.

▶ Carry out action steps according to the illustration.
▷ The BioFresh B-Value is set.
▷ Status display shows the target temperature.

SuperCool

This function activates or deactivates SuperCool. If you activate SuperCool the appliance increases the cooling capacity. This allows you to achieve lower cooling temperatures. You can activate SuperCool if you want to quickly cool large volumes of food.

The temperature in the VarioTempZone remains as preset. The active SuperCool function has no effect on the VarioTempZone.

If the function is active, the appliance operates at a higher output. As a result, the operating noise of the appliance may be temporarily louder, while energy consumption increases.

Activating SuperCool

Time for activating the function:

- If you want to store fresh food in the fridge section: Activate the function when storing food.



Fig. 32

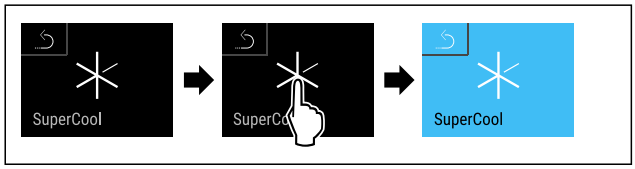

Fig. 33

▶ Carry out action steps according to the illustration.

-or-

▶ Activating with the SmartDevice app.

▷ SuperCool is activated.
▷ Temperature display turns blue.

Deactivating SuperCool

SuperCool is automatically deactivated after 18 hours. However, you can also manually deactivate SuperCool at any time:

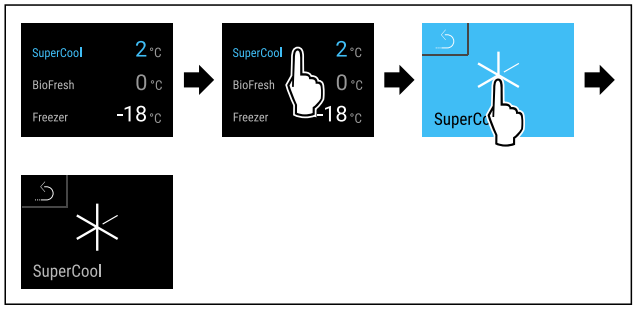

Fig. 34 Example illustration

▶ Carry out action steps according to the illustration.

-or-

▶ Deactivating with the SmartDevice app.

▷ SuperCool is deactivated.
▷ Appliance continues to run in normal operation.
▷ The appliance first cools to the set temperature.

SuperFrost

This function activates or deactivates SuperFrost. Activating SuperFrost the appliance increases the freezing capacity. This allows you to achieve lower freezer temperatures.

Application:

- Quickly freezing fresh food through to the core. This ensures that the nutrition value, look, and taste of the food is preserved.
- Increasing cold reserves in stored frozen food before defrosting the appliance.

The temperature in the VarioTempZone is affected by activating the SuperFrost function, provided the VarioTempZone is set between -12 °C and -18 °C. If the temperature of the VarioTempZone is within this temperature range the SuperFrost function is activated for the VarioTempZone. If the temperature is set higher than -12 °C, the VarioTempZone is not affected by SuperFrost.

If the function is active, the appliance operates at a higher output. As a result, the operating noise of the appliance may be temporarily louder, while energy consumption increases.

If the door is open for too long, e. g., because you are storing food, the appliance checks automatically whether the actual temperature in the appliance matches the appliance's set temperature. If the difference exceeds a defined value, the appliance cooling power is increased automatically. As a result, the temperature shown on the display may be higher than the actual temperature inside the appliance. This is normal and your appliance is working correctly.

Activating SuperFrost

Make sure that the following requirements are fulfilled:

❑ The freezing volume and time for SuperFrost activation are taken into account. (see Freezing food using SuperFrost)



Fig. 35

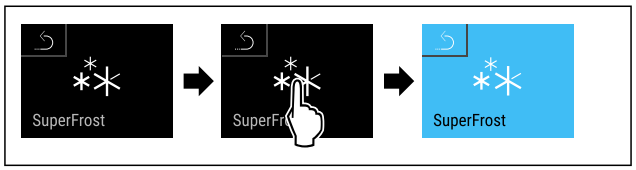

Fig. 36

▶ Carry out action steps according to the illustration.

-or-

▶ Activating with the SmartDevice app.

▷ SuperFrost is activated.
▷ Temperature display turns blue.

Deactivating SuperFrost

SuperFrost is automatically deactivated after 56 to 72 hours depending on the volume of the stored food. However, you can also manually deactivate SuperFrost at any time:

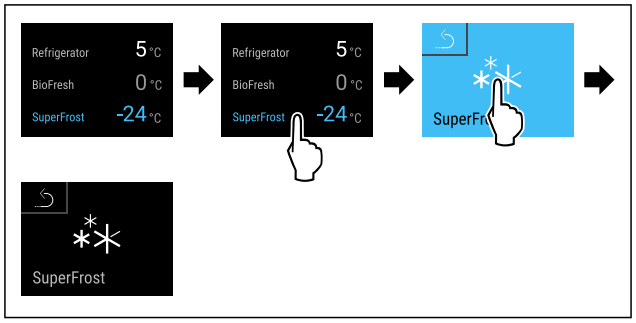

Fig. 37 Example illustration

▶ Carry out action steps according to the illustration.

-or-

▶ Deactivating with the SmartDevice app.

▷ SuperFrost is deactivated.
▷ Appliance continues to run in normal operation.
▷ The appliance first cools to the set temperature.

PartyMode

This function activates and deactivates PartyMode. PartyMode activates different functions that are useful for a party.

PartyMode activates the following functions:

- SuperCool (see SuperCool)
- SuperFrost (see SuperFrost)
- IceMaker with MaxIce (see IceMaker / MaxIce)

You can set all listed functions individually and flexibly. By deactivating PartyMode all changes are discarded.

If the function is active, the appliance operates at a higher output. As a result, the operating noise of the appliance may be temporarily louder, while energy consumption increases.

Activating PartyMode

Make sure that the following requirements are fulfilled:

❑ IceMaker has been started for the first time.
(see 5.2 Starting the IceMaker for the first time)



Fig. 38

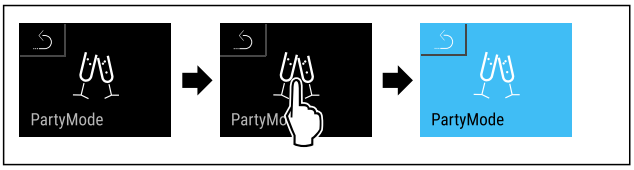

Fig. 39

▶ Carry out action steps according to the illustration.
▷ PartyMode and the corresponding functions are activated.
▷ Temperature display turns blue.
▷ The current temperature flashes until the target temperature is reached.

Deactivating PartyMode

PartyMode is automatically deactivated after 24 hours. However, you can also manually deactivate PartyMode at any time:

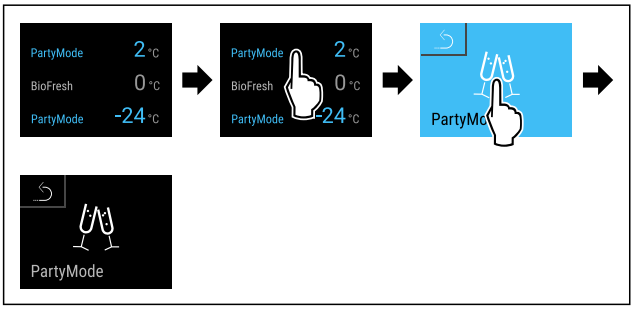

Fig. 40 Example illustration

▶ Carry out action steps according to the illustration.
▷ PartyMode is deactivated.
▷ The appliance first cools to the set temperature: The current temperature flashes until the target temperature is reached.

HolidayMode

Use this function to activate or deactivate HolidayMode. If you activate HolidayMode the fridge section is set to 15 °C. This helps you save energy if you are away for a longer period of time and avoid bad smells and mold formation.

Appliance status with active HolidayMode
Fridge section cools to 15 °C.
BioFresh cools down to 15 °C.
The set temperature is maintained in the freezer section.
PartyMode is deactivated.
SuperCool is deactivated.

Activating HolidayMode

▶ Empty the fridge section completely.
▶ Empty BioFresh completely.

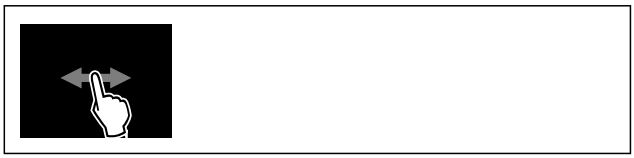

Fig. 41

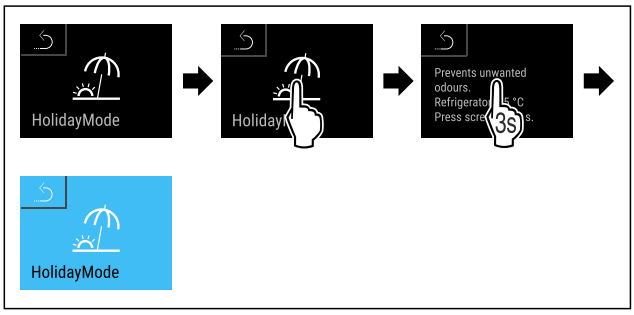

Fig. 42

▶ Carry out action steps according to the illustration.
▷ HolidayMode is activated.
▷ Temperature display turns blue and shows the HolidayMode symbol.

Deactivating HolidayMode

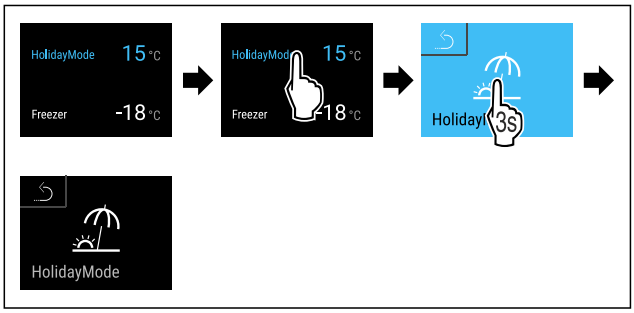

Fig. 43

▶ Carry out action steps according to the illustration.
▷ HolidayMode is deactivated.
▷ The appliance first cools to the set temperature.

SabbathMode

This function activates and deactivates SabbathMode. If you activate this function, some electronic functions are switched off. Your appliance thereby meets the religious requirements of Jewish holidays such as the Sabbath and complies with STAR-K Kosher certification.

Appliance status with active SabbathMode
The status display continuously shows SabbathMode.
All functions in the display except the **Deactivating SabbathMode function** are disabled.
Active functions remain active.
The display remains bright when you close the door.
The interior lighting is deactivated.
Memories are not listed. The set time interval is stopped.
Memories and warnings are not displayed.
There is no door alarm.
There is no temperature alarm.
The IceMaker is out of order.
The defrost cycle operates only for the specified time without taking into account the appliance usage.
After a power failure, the device returns to SabbathMode.

Appliance status

Note
This appliance has certification from the “Institute for Science and Halacha”. (www.machonhalacha.co.il)

You can find a list of STAR-K-certified appliances at www.star-k.org/appliances.

Activating SabbathMode

WARNING
Danger of poisoning from spoiled food!
If you have SabbathMode activated and a power failure occurs, no message appears in the status display about the power failure. Once the power is restored, the appliance continues to operate in SabbathMode. The power failure may mean that food spoils and the consumption of this food could lead to food poisoning.
After a power failure:
▶ Do not consume food that has been frozen and thawed.



Fig. 44

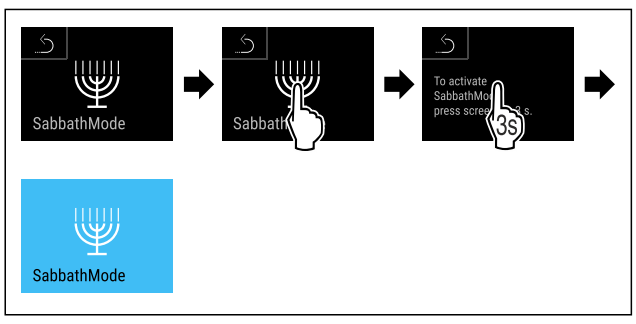

Fig. 45

▶ Carry out action steps according to the illustration.
▷ SabbathMode is activated.
▷ Any output that has already started on the Water & Ice center (e.g., ice cubes, crushed ice, water) is completed.
▷ Status display continuously shows SabbathMode.

Deactivating SabbathMode

SabbathMode is automatically deactivated after 80 hours. However, you can also manually deactivate SabbathMode at any time:

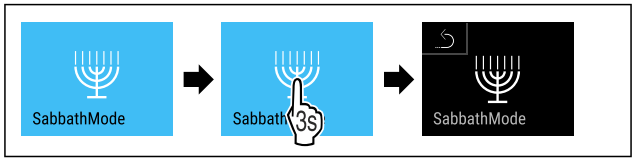

Fig. 46

▶ Carry out action steps according to the illustration.
▷ SabbathMode is deactivated.

EnergySaver

Use this function to activate or deactivate energy saving mode. If you activate energy saving mode, energy consumption drops and the temperature in the appliance increases. Food remains fresh, but shelf life is reduced.

The temperature in the VarioTempZone remains as preset. The active EnergySaver function has no effect on the VarioTempZone.

Temperature zone	Recommended setting (see Setting the temperature in the fridge section)	Temperature while EnergySaver is active
5 °C Fridge section	4 °C	7 °C
-18 °C Freezer section	-18 °C	-16 °C

Temperatures

Activating EnergySaver



Fig. 47

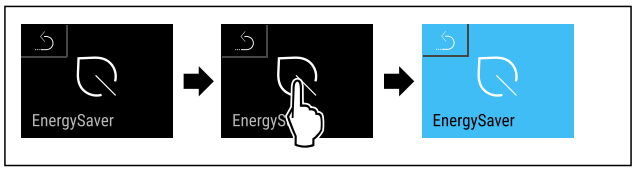

Fig. 48

▶ Carry out action steps according to the illustration.
▷ Energy saving mode is activated.

*** Depending on model and options**

Deactivating EnergySaver

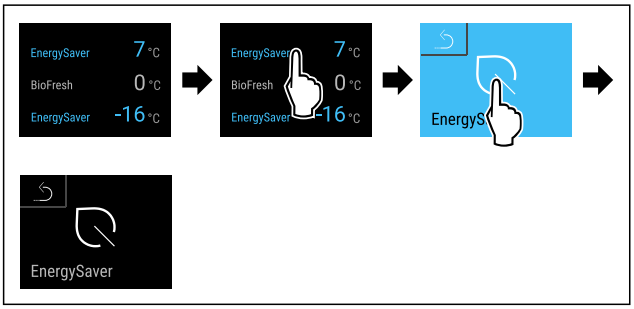

Fig. 49 Example illustration

▶ Carry out action steps according to the illustration.
▷ Energy saving mode is deactivated.

IceMaker / MaxIce

This function activates and deactivates the IceMaker that produces ice cubes. Use the MaxIce function to increase the amount of ice cubes that the IceMaker produces. MaxIce is automatically deactivated after 48 hours. However, you can also manually deactivate MaxIce at any time: (see Deactivating MaxIce)

More information on the number of ice cubes:	(see 11.1 Technical specifications)
More information on the IceMaker water inflow:	
More information on cleaning the lines of the IceMaker:	(see TubeClean)

If the function is active, the appliance operates at a higher output. As a result, the operating noise of the appliance may be temporarily louder, while energy consumption increases.

Activating IceMaker

Make sure that the following requirements are fulfilled:

❑ The water supply is established at the fixed water connection. See Assembly Manual.
❑ IceMaker is put into operation. (see 9.7 IceMaker)

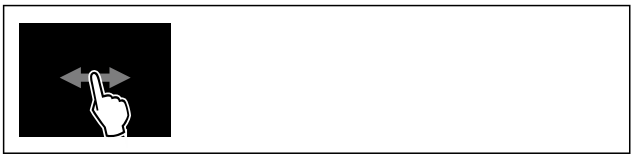

Fig. 50

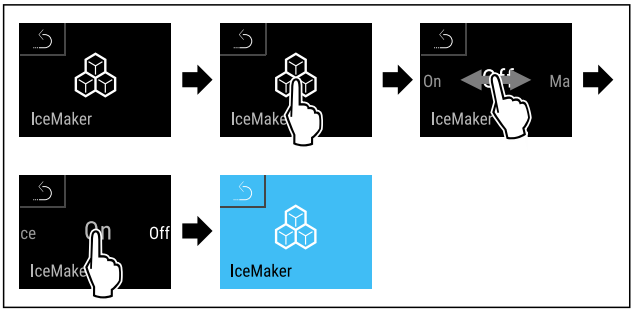

Fig. 51

▶ Carry out action steps according to the illustration.

-or-

▶ Activate with the SmartDevice app.

▷ IceMaker is activated. It can take up to 24 hours for the IceMaker to produce the first ice cubes.
▷ The IceMaker symbol appears in the status display.

Activating the IceMaker with MaxIce

If you have not activated the IceMaker function before, make sure that the following requirements are met:

❑ The water supply is established at the fixed water connection. See Assembly Manual.
❑ IceMaker is put into operation. (see 9.7 IceMaker)



Fig. 52

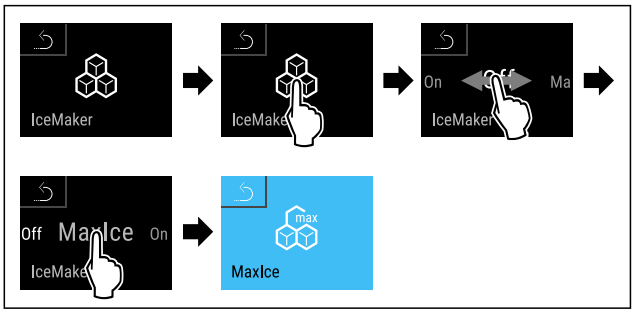

Fig. 53

▶ Carry out action steps according to the illustration.

-or-

▶ Activate with the SmartDevice app.

▷ The IceMaker is activated with MaxIce.
▷ The IceMaker symbol appears in the status display.

Changing between the IceMaker and MaxIce

If you have activated IceMaker and would like to change to MaxIce:



Fig. 54

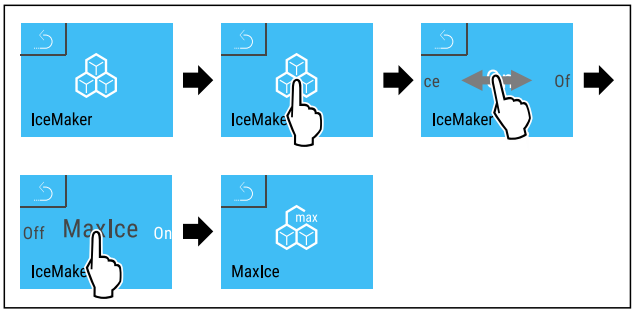

Fig. 55

▶ Carry out action steps according to the illustration.
▷ The IceMaker is activated with MaxIce.

If you have activated MaxIce and would like to change to IceMaker:



Fig. 56

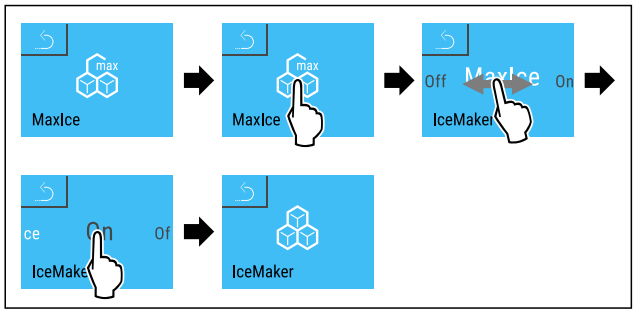

Fig. 57

▶ Carry out action steps according to the illustration.
▷ IceMaker is activated.
▷ MaxIce is deactivated.

Deactivating IceMaker and MaxIce



Fig. 58

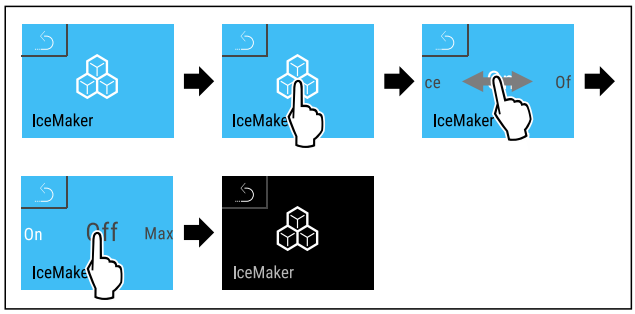

Fig. 59 Example illustration of the active IceMaker function

▶ Carry out action steps according to the illustration.

-or-

▶ Deactivate with the SmartDevice app.

▷ IceMaker and MaxIce are deactivated.
▷ If ice cubes are currently being made, the system completes the process.
▷ The IceMaker goes off automatically.

Deactivating MaxIce

▶ Activate IceMaker. (see Activating IceMaker)
▷ MaxIce is deactivated.
▷ IceMaker is activated.
▷ Deactivating IceMaker and MaxIce: (see Deactivating IceMaker and MaxIce)

IceMaker water inflow

Set the water inflow with this function. The water inflow regulates the water inflow volume. You can adjust the water inflow if it does not match the water pressure and the size of the ice cubes dispensed.

Upon delivery, the water inflow is set to value 4. You can select a value of between 1 (smallest inflow volume) and 8 (largest inflow volume).

Setting the water inflow

Make sure that the following requirements are fulfilled:

❑ IceMaker has been started for the first time. (see 5.2 Starting the IceMaker for the first time)
❑ IceMaker is activated. (see IceMaker / MaxIce)



Fig. 60

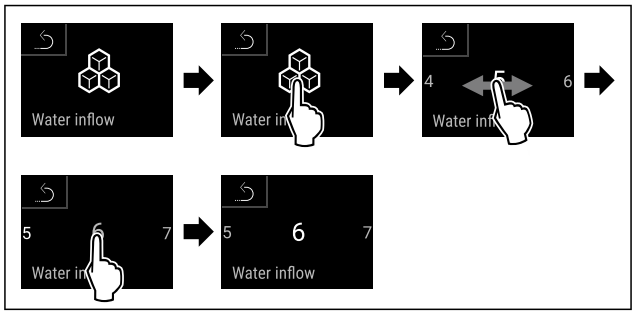

Fig. 61 Example illustration: Switching from value 5 to value 6.

▶ Carry out action steps according to the illustration.
▷ Water inflow is set.

TubeClean

This function activates or deactivates TubeClean. Activating TubeClean cleans the IceMaker lines.

Activating TubeClean

Make sure that the following requirements are fulfilled:

❑ IceMaker cleaning is prepared. (see 10.8.5 Cleaning the IceMaker)
❑ Empty container with a capacity of 1.5 l and with a maximum height of 10 cm is ready.

▶ Place the container into the drawer below the IceMaker.



Fig. 62

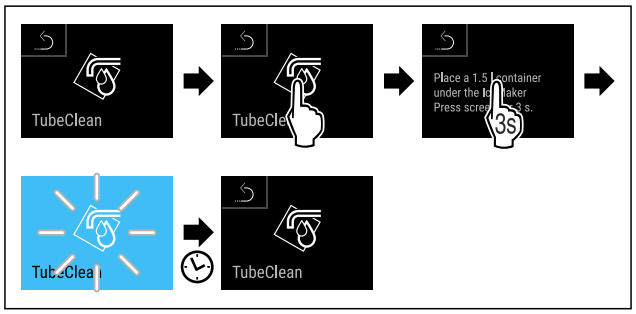

Fig. 63

▶ Carry out action steps according to the illustration.
▷ TubeClean is activated.
▷ Cleaning process has started: Symbol flashes until the cleaning process is automatically completed after 60 minutes.
▷ When the cleaning process is completed: Appliance continues to run in normal operation.

Deactivating TubeClean

TubeClean is automatically completed after 60 minutes. However, you can also deactivate TubeClean at any time during the cleaning process:

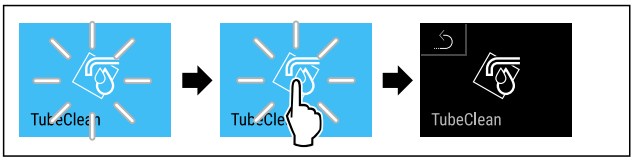

Fig. 64

▶ Carry out action steps according to the illustration.
▷ TubeClean is deactivated: Cleaning process is canceled.
▷ Appliance continues to run in normal operation.

CleaningMode

This function activates and deactivates CleaningMode. CleaningMode enables you to comfortably clean the appliance.

This setting relates to the fridge compartment.

Application:

- Clean the fridge compartment. (see 10.8 Cleaning the appliance)

Appliance status with active CleaningMode
The status display continuously shows CleaningMode.
The fridge section is switched off.
The interior lighting is activated.
Reminders and warnings are not displayed. No signal tone is sounded.

Appliance status

Activating CleaningMode



Fig. 65

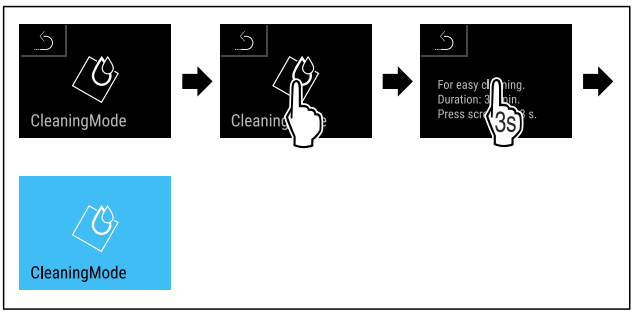

Fig. 66

▶ Carry out action steps according to the illustration.
▷ CleaningMode is activated.
▷ Status display continuously shows CleaningMode.

Deactivating CleaningMode

CleaningMode is automatically deactivated after 30 minutes. However, you can also manually deactivate CleaningMode at any time:

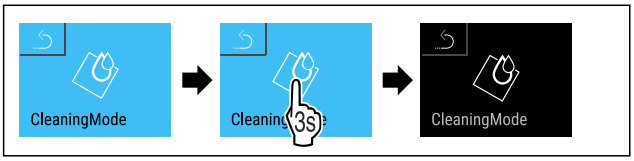

Fig. 67

▶ Carry out action steps according to the illustration.
▷ CleaningMode is deactivated.
▷ The appliance first cools to the set temperature.

Child lock

Use this function to activate and deactivate the child lock. The child lock prevents the appliance from being operated accidentally, e. g. by children.

Application:

- Prevent unintentional changes of functions.
- Prevent switching off of the appliance.
- Prevent unintentional temperature setting.

Activating child lock

If you activate the child lock, you can continue to navigate in the menus, however you cannot select or modify other functions.



Fig. 68

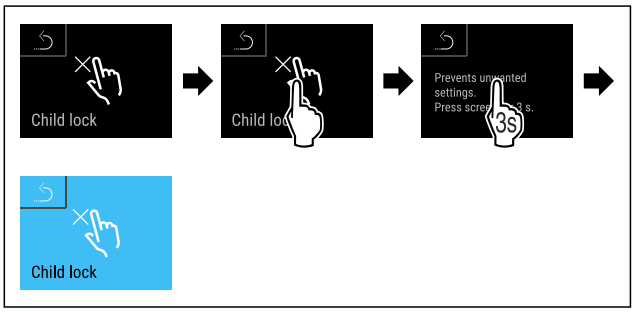

Fig. 69

▶ Carry out action steps according to the illustration.
▷ Child lock is activated.

Deactivating child lock



Fig. 70

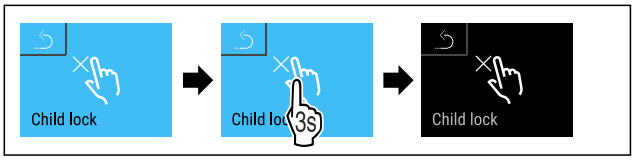

Fig. 71

▶ Carry out action steps according to the illustration.
▷ Child lock is deactivated.

Reminder

Use this function to activate or deactivate reminder. This function is activated upon delivery.

The following reminders will then appear if the function is activated:

- Replace the FreshAir activated charcoal filter (see Replace FreshAir activated charcoal filter)

Activating reminder



Fig. 72

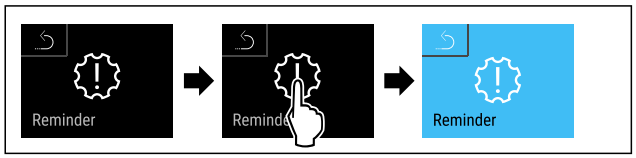

Fig. 73

▶ Carry out action steps according to the illustration.
▷ Reminder is activated.

Deactivating reminder



Fig. 74

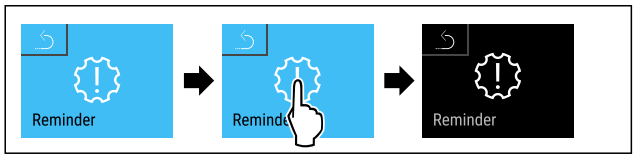

Fig. 75

▶ Carry out action steps according to the illustration.
▷ Reminder is deactivated.

Language

Use this function to set the display language.

You can set the following languages:

- German
- English
- French
- Spanish
- Italian
- Dutch
- Czech
- Polish
- Portuguese
- Bulgarian
- Russian
- Chinese

Setting the language



Fig. 76

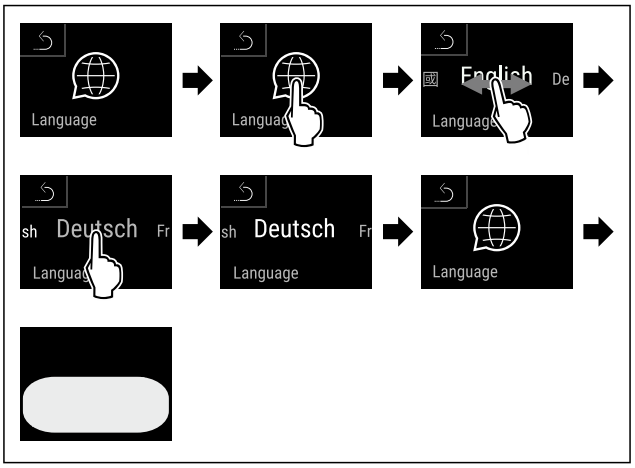

Fig. 77 Example illustration depending on the language and temperature

▶ Carry out action steps according to the illustration.
▷ Language is set.
▷ Display jumps back to the status display.

Temperature unit

Use this function to set the temperature unit. You can set the temperature unit in either degrees Celsius or degrees Fahrenheit.

Setting the temperature unit



Fig. 78

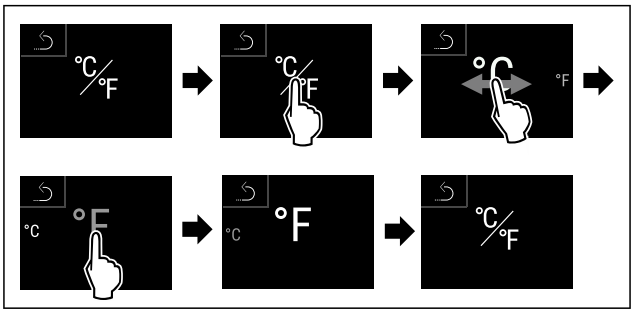

Fig. 80 Example illustration: Switching between degrees Celsius or degrees Fahrenheit.

▶ Carry out action steps according to the illustration.
▷ Temperature unit is set.

Display Brightness

Use this function to set the brightness of the display gradually.

You can set the following brightness levels:

- 40 %
- 60 %
- 80 %
- 100% (default setting)

Setting the brightness



*** Depending on model and options**

Fig. 81

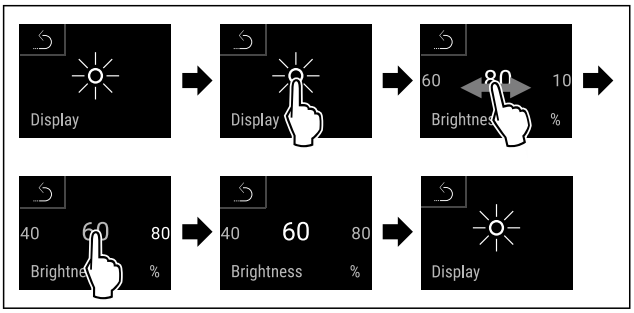

Fig. 82 Example illustration: Switching from 80 % to 60 %.

▶ Carry out action steps according to the illustration.
▷ Brightness is set.

H-Value

Use this function to switch on the appliance's anti-condensation heater if condensation forms around the fridge or freezer section. Condensation may form at higher humidity levels and lower ambient temperatures.

Upon delivery, the H-Value is set to the value HA. If you adjust the H-Value, please observe the following table:

Value	Description
HA	Automatically controlled depending on humidity and ambient temperature
H0	Anti-condensation heater is switched off.

Setting the H-Value



Fig. 83

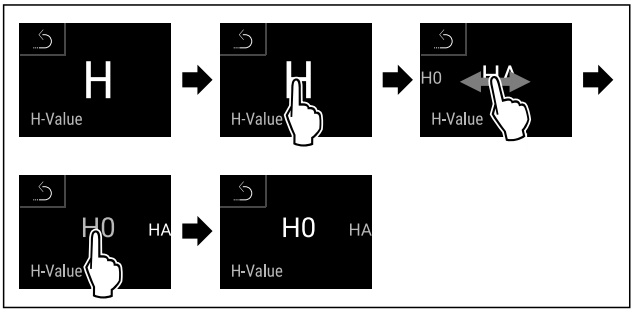

Fig. 84 Example illustration: Switching from HA to H0.

▶ Carry out action steps according to the illustration.
▷ The H-Value is set.

WiFi

Use this function to connect your appliance to WiFi. You can then operate it via the SmartDevice app on a mobile device. You can also use this function to disconnect or reset the WiFi connection.

More information on the SmartDevice: (see 2.4 SmartDevice)

Note
The SmartDevice function is not available in the following countries: Russia, Belarus, Kazakhstan.

Establishing the WiFi connection for the first time

Make sure that the following requirements are fulfilled:

❑ You have installed the SmartDevice app (see apps.home.liebherr.com).
❑ Registration in the SmartDevice app is completed.



Fig. 85

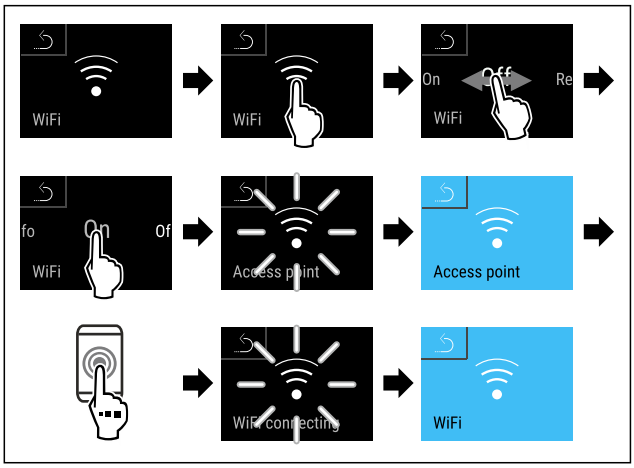

Fig. 86

▶ Carry out action steps according to the illustration.
▷ Connection is established.

Disconnecting from the WiFi



Fig. 87

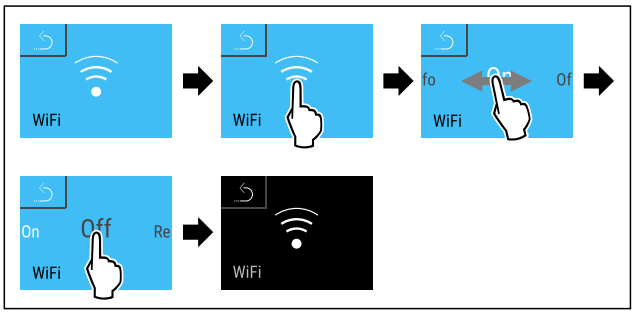

Fig. 88

▶ Carry out action steps according to the illustration.
▷ There is no connection.

Resetting the WiFi connection



Fig. 89

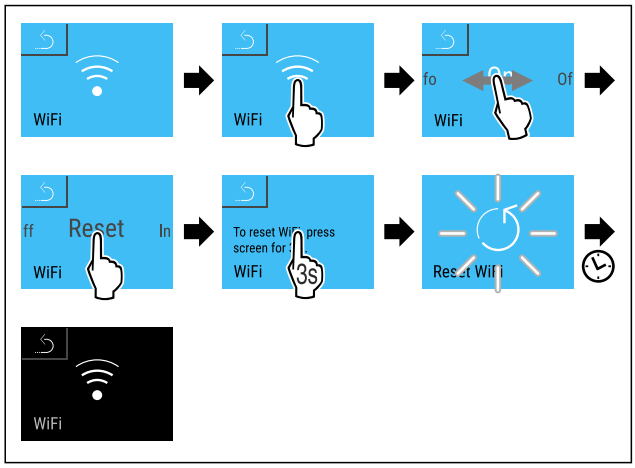

Fig. 90

▶ Carry out action steps according to the illustration.
▷ WiFi connection and other WiFi settings are reset to factory settings.

Showing information about the WiFi connection



Fig. 91

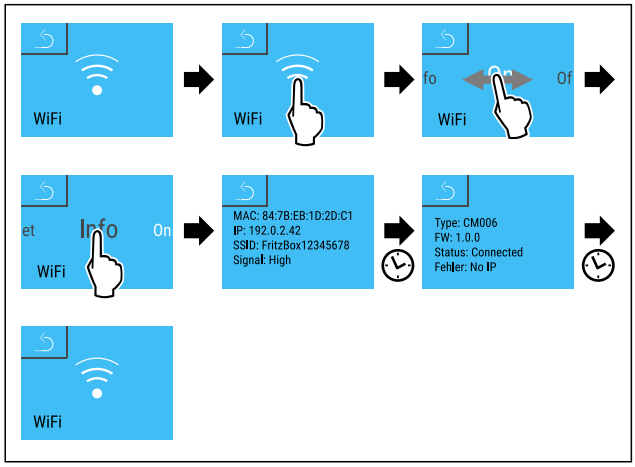

Fig. 92

▶ Carry out action steps according to the illustration.

Appliance and software information

Use this function to display the model name, index, serial number and service number of your appliance. You will need the appliance information when you contact customer service. (see 11.4 Customer Service)

You also use this function to open the expanded menu. (see 4 Functionality of the Touch & Swipe display)

Display appliance information



Fig. 93

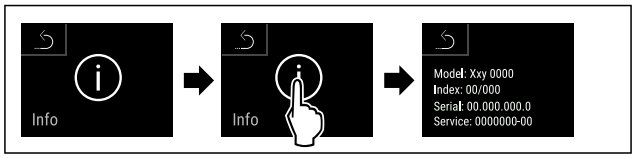

Fig. 94

▶ Carry out action steps according to the illustration.
▷ Display shows the appliance information.

Display software information



Fig. 95

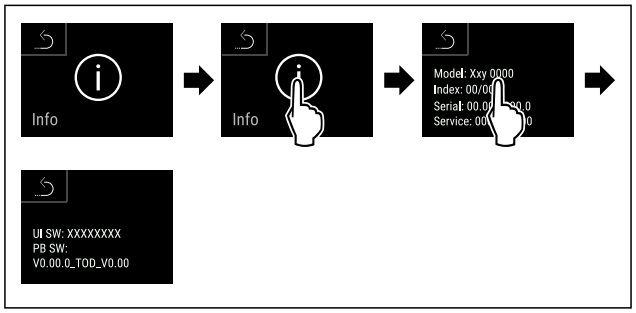

Fig. 96

▶ Carry out action steps according to the illustration.
▷ Display shows the software information.

Start defrost cycle

Use this function to start the automatic defrost cycle manually if the defrost cycle does not start automatically in case of an error.

Starting the defrost cycle



Fig. 97

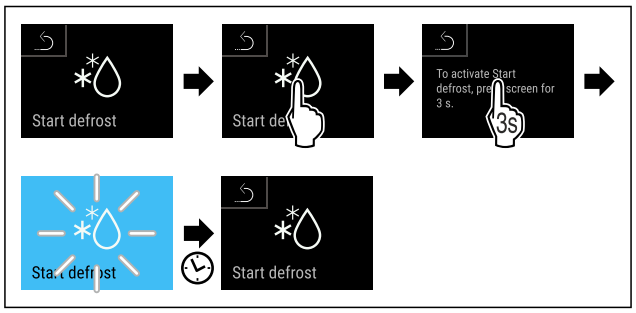

Fig. 98

▶ Carry out action steps according to the illustration.
▷ Defrost cycle has started: Symbol flashes until the defrost cycle is automatically completed.
▷ When the defrost cycle is completed: Appliance continues to run in normal operation.

Canceling the defrost cycle

The defrost cycle is automatically completed. However, you can also cancel the defrost cycle at any time during the defrosting:

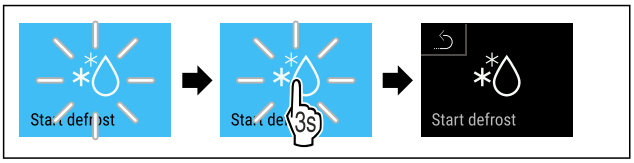

Fig. 99

▶ Carry out action steps according to the illustration.
▷ Defrost cycle is canceled.
▷ Appliance continues to run in normal operation.

Door alarm

Use this function to activate or deactivate the door alarm. The door alarm sounds if the door is open for too long. The door alarm is activated upon delivery. You can set how long to door can remain open until the door alarm sounds.

You can set the following values:

- 1 minute
- 2 minutes
- 3 minutes
- Off

Setting the door alarm



Fig. 100

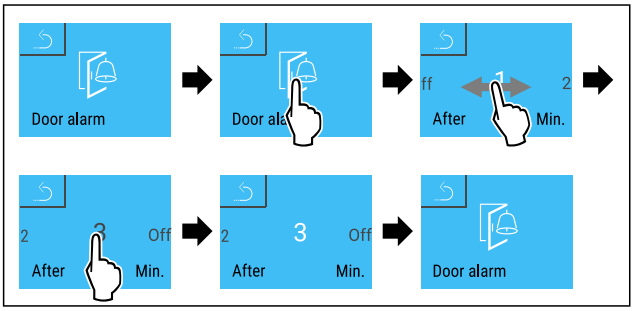

Fig. 101 Example illustration: Changing the door alarm from 1 minute to 3 minutes.

▶ Carry out action steps according to the illustration.
▷ Door alarm is set.

Deactivating door alarm



Fig. 102

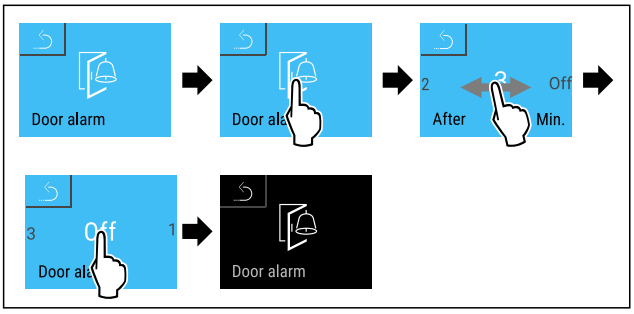

Fig. 103

▶ Carry out action steps according to the illustration.
▷ Door alarm is deactivated.

Demo mode

Demo mode is a special feature for dealers who want to demonstrate appliance features. If you activate demo mode, all refrigeration functions are deactivated.

If you switch on your appliance and a “D” appears on the status display, demo mode is already activated.

If you activate and then deactivate demo mode, the appliance will be reset to factory defaults. (see Resetting to factory settings)

Activating demo mode



Fig. 104

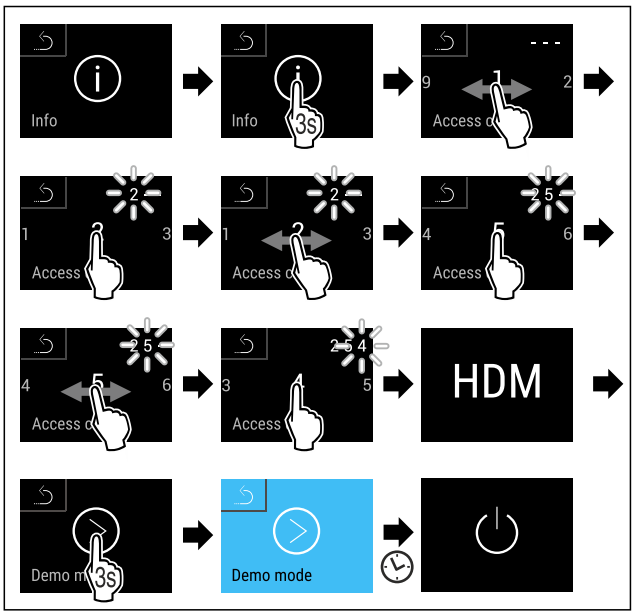

Fig. 105

▶ Carry out action steps according to the illustration.
▷ Demo mode is activated.
▷ Appliance is switched off.
▶ Switch on the appliance. (see 5.1 Switching on appliance (first use))
▷ “D” appears in the status display.

Deactivating demo mode



Fig. 106

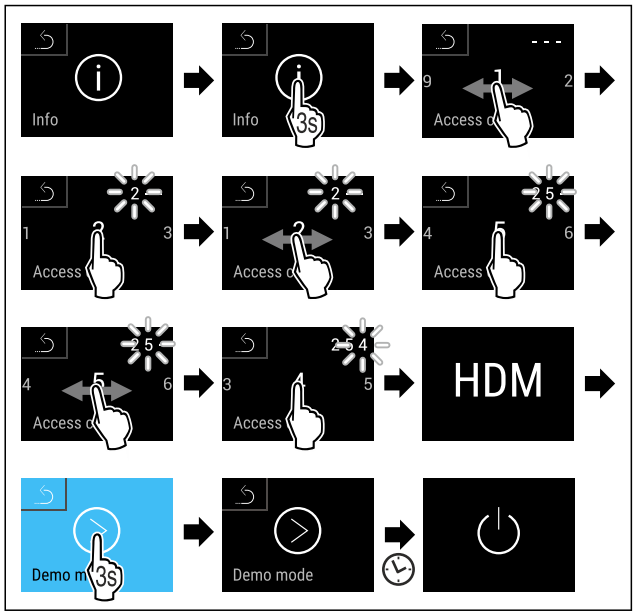

Fig. 107

▶ Carry out action steps according to the illustration.
▷ Demo mode is deactivated.
▷ Appliance is switched off.
▶ Switch on the appliance. (see 5.1 Switching on appliance (first use))
▷ Appliance is reset to factory settings.

Resetting to factory settings

Use this function to reset all settings to factory settings. All settings you have made so far are reset to their original settings.

Performing a reset



Fig. 108

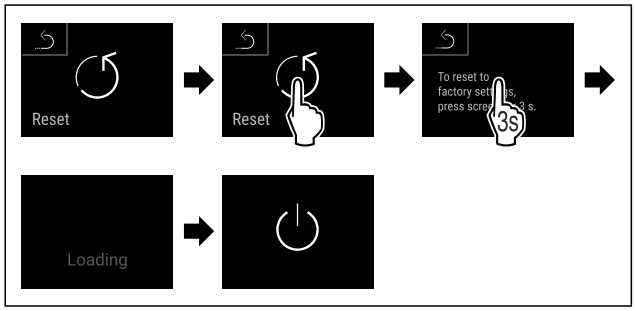

Fig. 109

▶ Carry out action steps according to the illustration.
▷ Appliance is reset.
▷ Appliance is switched off.
▶ Restart the appliance. (see 5.1 Switching on appliance (first use))

8.3 Messages

There are two categories of messages:

Category	Meaning
Warning	Warnings are displayed if there is a malfunction. You can easily end warnings yourself. For any major malfunction, you must contact Customer Service. (see 11.4 Customer Service)
Reminder	Reminders remind you of general processes. You can perform these processes and end the message doing so.

8.3.1 Overview of warnings

The appliance's behavior in the event of a warning:

- Warning appears in the display in red.
- Alarm sounds in increasing volume.
- For some warnings the interior lighting pulses.

Message	Cause	Ending the message
 **Power failure alarm**	The message appears if the temperature has increased due to a power failure.	Carry out action steps.
 **Temperature alarm**	The message appears if the temperature in the appliance does not correspond to the set temperature.	Carry out action steps.
 **Error**	This message appears if there is an appliance error. An appliance module indicates an error.	Carry out action steps. (see Error)
 **WLAN error**	This message appears if the appliance could not be connected to WLAN. (see Establishing the WiFi connection for the first time) This message only appears the first time the appliance is set up.	Carry out action steps. (see WLAN error)
 **Connection error**	The message appears if the connection to the home network is interrupted. This message only appears the first time the appliance is set up.	Carry out action steps.
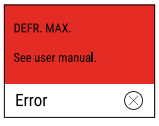 **Defrost cycle error**	The message appears if the appliance has attempted to defrost five times in a row and problems occurred in the process.	Carry out action steps. (see Defrost cycle error)

*** Depending on model and options**

8.3.2 Ending warnings

Power failure alarm

This message is displayed for each temperature zone of your appliance. Once the power failure has ended, the appliance automatically cools to the target temperature set earlier without you having to confirm the message. You must confirm it in order for the message to disappear on the display.

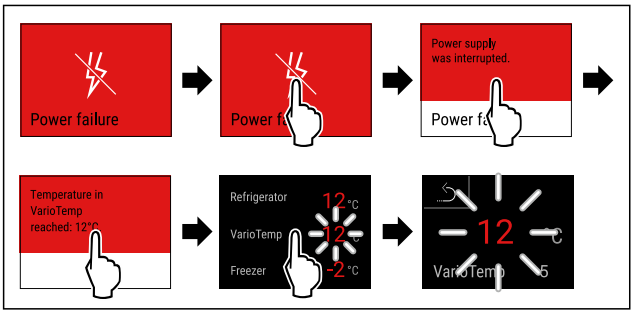

Fig. 110 Example illustration

▶ Briefly touch the display.
▷ Display shows information about the warning.
▶ Briefly touch the display.
▷ The warmest freezing temperature is displayed.
▷ If the freezing temperature was below -9 °C: Food can still be eaten.
If the freezing temperature exceeded -9 °C:
▶ Check the food.
▶ Briefly touch the display.
▷ Display skips to status display: The current temperature and target temperature are displayed.

Temperature alarm

This message is displayed for each temperature zone of your appliance. You must confirm it in order for the message to disappear on the display.

Causes for the temperature differences may be:

- You have put in warm, fresh food.
- Too much warm room air has flowed in during the rearrangement and removal of food.
- The power has been out for a longer period of time.
- The appliance is defective.

▶ Remedy the cause.
▷ The appliance cools to the target temperature set earlier.

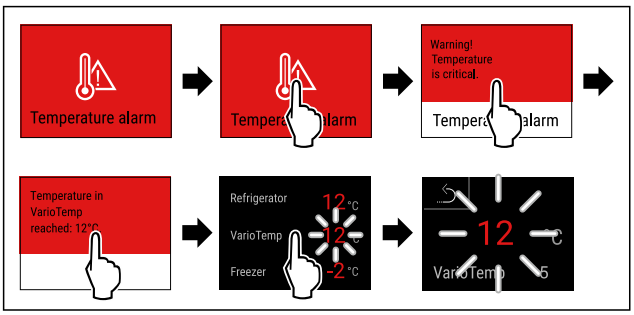

Fig. 111 Example illustration

▶ Briefly touch the display.
▷ Display shows information about the warning.
▶ Briefly touch the display.
▷ The warmest freezing temperature is displayed.
▷ If the freezing temperature was below -9 °C: Food can still be eaten.
If the freezing temperature exceeded -9 °C:
▶ Check the food.
▶ Briefly touch the display.
▷ Display skips to status display: The current temperature and target temperature are displayed.

Error

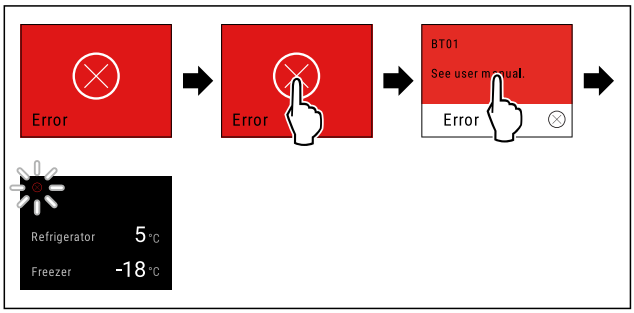

Fig. 112 Example illustration

▶ Briefly touch the display.
▷ Error code is displayed.
▶ Make a note of the error code.
▶ Briefly touch the display.
▷ Display skips to status display.
▶ Contact Customer Service. (see 11.4 Customer Service)

WLAN error

▶ Check the WLAN connection.
▶ Connect the appliance to the WLAN again. (see WiFi)

Defrost cycle error

▶ Starting automatic defrost cycle manually: (see Start defrost cycle)

8.3.3 Overview of reminders

The appliance's behavior in the event of a reminders:

- Reminder appears in the display in yellow.
- Alarm tone sounds.
- For some reminders the interior lighting pulses.

You can deactivate the following reminders (see Deactivating reminder) :

- Replace FreshAir activated charcoal filter

Message	Cause	Ending the message
 **Check water connection**	This message appears if the IceMaker is active, but the IceMaker is no longer being supplied with water by a permanent water connection.	Carry out action steps. (see Check water connection)
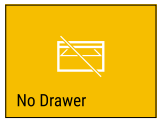 **Push in the IceMaker drawer**	This message appears if the IceMaker is active, but the IceMaker drawer is open.	Carry out action steps. (see Push in the IceMaker drawer)
 **Replace FreshAir activated charcoal filter**	This message appears if you have to replace the FreshAir activated charcoal filter.	Carry out action steps. (see Replace FreshAir activated charcoal filter)
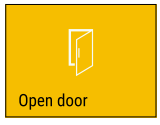	The message appears if the door is open for too long.	Carry out action steps. (see Door alarm)

8.3.4 Ending reminders

Check water connection

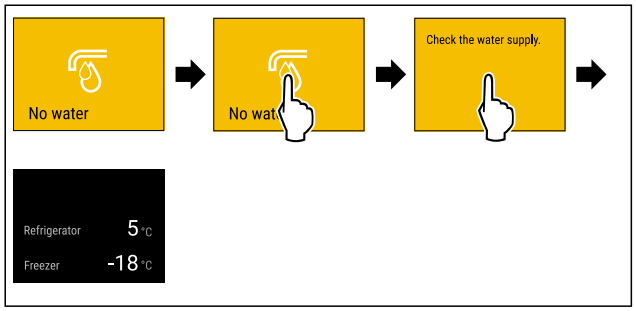

Fig. 113 Example illustration

▶ Briefly touch the display
▷ Display shows information about the reminder.
▶ Briefly touch the display
▶ Check the water connection.

-or-

▶ Deactivate IceMaker. (see Deactivating IceMaker and MaxIce)

If the water connection has been checked and IceMaker is activated:

▶ Clean the IceMaker. (see 10.8.5 Cleaning the IceMaker)
▷ IceMaker is producing ice cubes.

Push in the IceMaker drawer

▶ Push in the IceMaker drawer.

-or-

▶ Deactivate IceMaker. (see IceMaker / MaxIce)

▷ If the IceMaker drawer is pushed in and IceMaker is active: IceMaker is producing ice cubes.

Replace FreshAir activated charcoal filter

Liebherr recommends: Replace the FreshAir activated charcoal filter every 6 months.

Note
FreshAir activated charcoal filters can be purchased from the Liebherr-Hausgeräte store at go.liebherr.com/47wtc4.

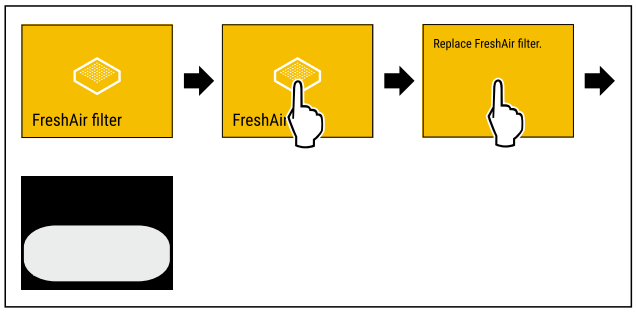

Fig. 115 Example illustration

▶ Briefly touch the display.
▷ Display shows information about the reminder.
▶ Briefly touch the display.
▶ Replace activated charcoal filter. (see 10.1 FreshAir carbon filter)
▷ The activated charcoal filter ensures optimum air quality in the refrigerator.
▷ Reminder appears again after 6 months.

If you no longer want to keep this reminder, you can deactivate the reminder. (see Deactivating reminder)

Door alarm

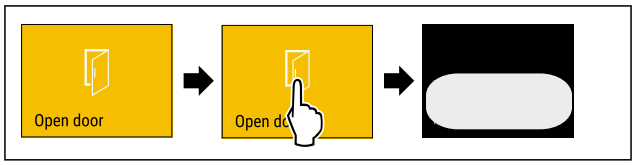

Fig. 116

▶ Carry out action steps according to the illustration.

-or-

▶ Close the door.

▷ Display skips to status display.

You can set how long to door may remain open until the door alarm sounds. (see Setting the door alarm)

9 Equipment

9.1 Door racks

Door racks are suitable for storing beverages and food. You can move door racks for use as individually needed and disassemble them for cleaning. However, Liebherr recommends using the door racks in the position they are in when delivered from the plant.

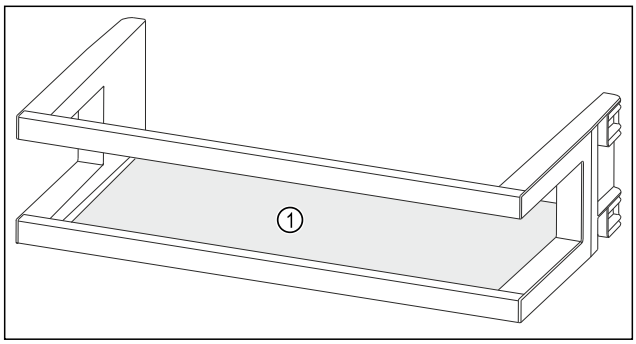

Fig. 117 Example illustration of the door racks
(1) Shelf

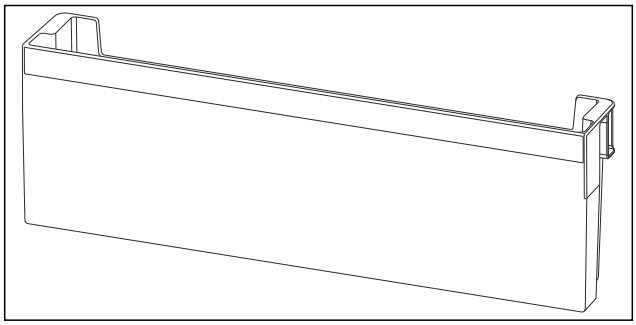

Fig. 118 Example illustration of the door racks

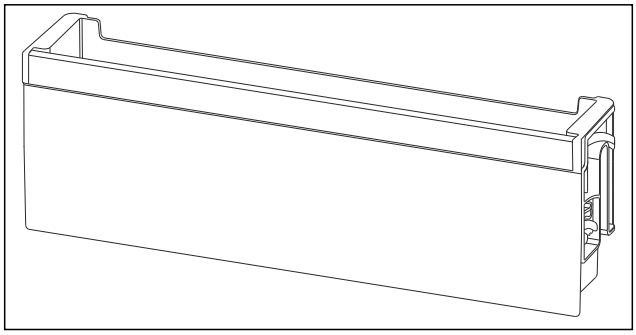

Fig. 119 Example illustration of fold-down door racks

The following table shows examples of what you can store in each door rack.

Door racks	Food
Door racks (see Fig. 117)	Butter, cheese, canned food, large containers
	Use the movable bottle holder to secure the bottles in the door rack.
Door racks (see Fig. 118)	small food items and packages, tubes, cosmetics
Fold-down door rack (see Fig. 119)	small food items and packages, tubes, cosmetics

9.1.1 Removing the door rack

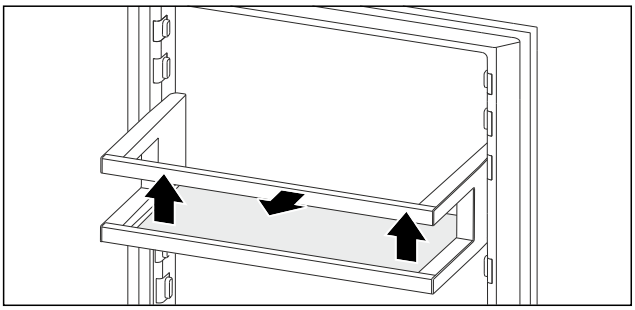

Fig. 120 Example illustration

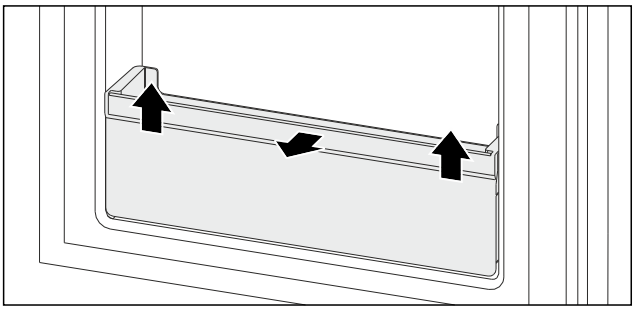

Fig. 121 Example illustration

▶ Move the door rack up.
▶ Move the door rack to the front.

9.1.2 Inserting the door rack

CAUTION
Risk of damage and/or injury due to improperly placed food or items!
If you place food or items on the lowest glass shelf, the door may not close properly. This may cause the door rack to break, allowing food or other items to fall out and cause injury.
▶ Keep the front area of the lowest glass shelf clear.

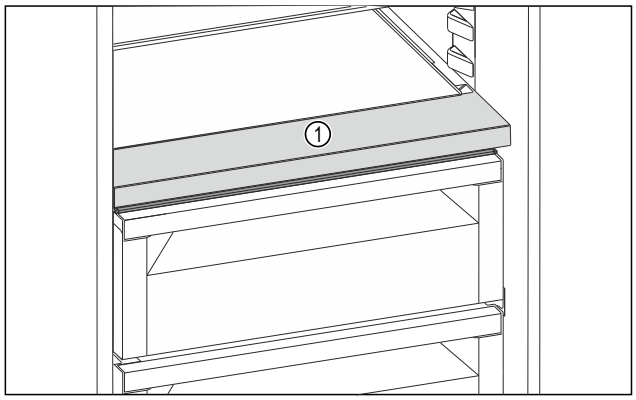

Fig. 122 Example illustration

(1) Front area

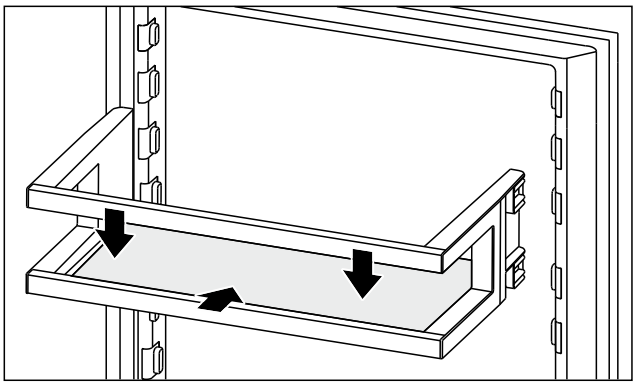

Fig. 123 Example illustration

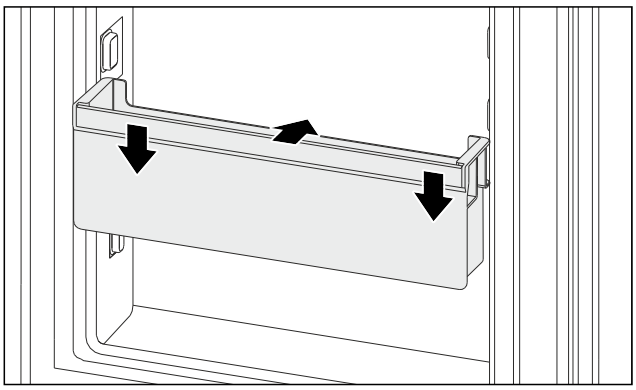

Fig. 124 Example illustration

▶ Insert the door rack.
▶ Press the door rack down.

9.2 Shelves

Different types of shelves are available depending on the appliance model:
- Single-piece shelf
- Variable bottle rack (see 9.3 Variable bottle shelf)
- Shelf in the freezer section

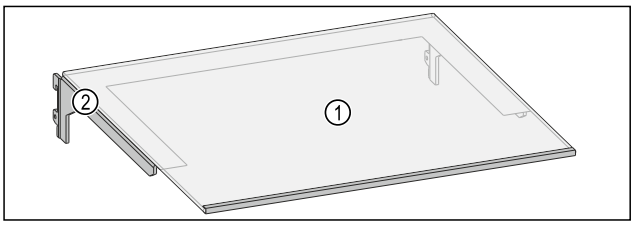

Fig. 125 Example illustration of the shelf
(1) Shelf **(2)** Retaining part

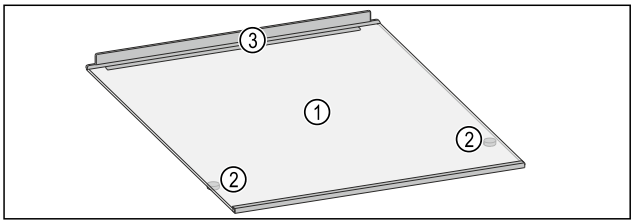

Fig. 126 Example illustration of the freezer section shelf
(1) Shelf **(3)** Retaining edge
(2) Pull-out stop

9.2.1 Using the shelves in the fridge section

You can reposition the shelves, remove them completely, or remove them for cleaning.

Make sure that the following requirements are met:

❑ Shelves are empty.

Removing the shelf

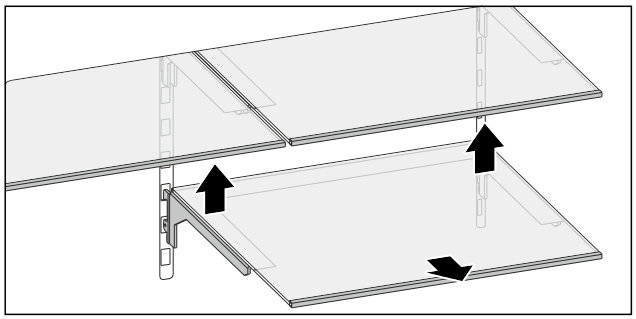

Fig. 127

▶ Lift the shelf.
▶ Remove the shelf by pulling it forward.
▷ The shelves have been removed.
▷ You can insert the shelves at a different height.

Inserting the shelves

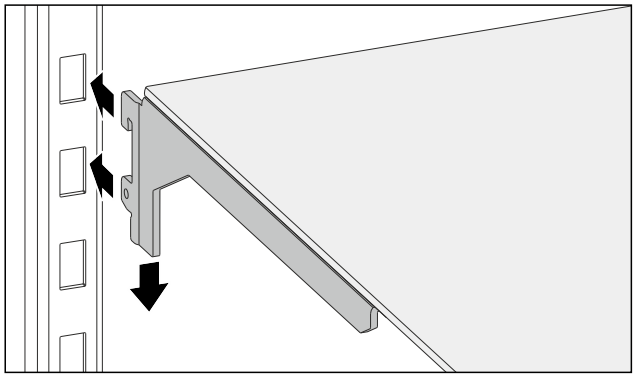

Fig. 128

▶ Insert the hooks of the shelf into the openings of the support rails at the desired height.
▶ Press down.

NOTICE
Risk of damage by improperly inserting the small shelves!
Breaking, jumping and splintering of the equipment. If you do not install the small shelf in one of the positions shown, it may fall and damage or break the shelves below.
▶ Install the small shelf only in one of the positions shown.

9.2.2 Removing / installing the shelves in the freezer section

You can remove the shelves completely or for cleaning. The shelves in the freezer section are secured against unintentional removal by pull-out stops.

Removing the shelves

Make sure that the following requirements are met:

❑ Shelves are empty.

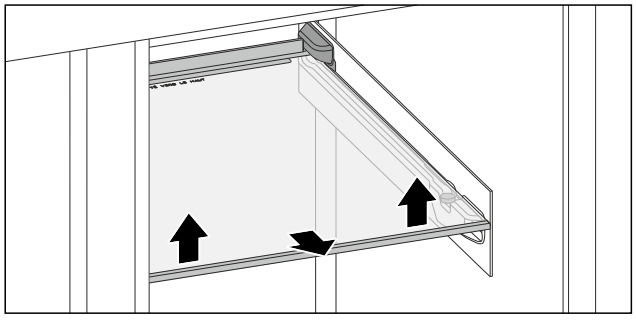

Fig. 129

▶ Lift the shelf at the front.
▶ Remove the shelf by pulling it forward.

Inserting the shelves

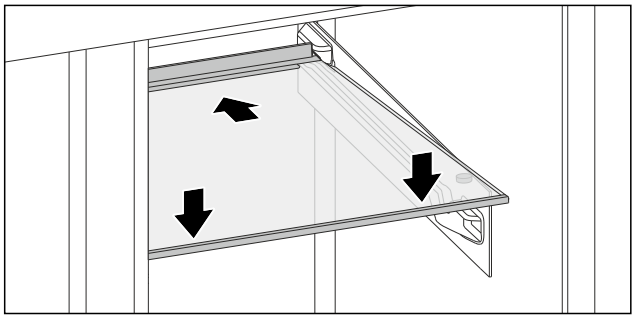

Fig. 130

If the pull-out stops point downward:

▶ Place the shelf at an angle, tilted back and down.
▶ Lower the front part downward.
▷ The pull-out stops are positioned behind the front support surface.

9.3 Variable bottle shelf

You can use either the glass shelf, both glass shelved, or the variable bottle shelf on the floor of the fridge section. Both glass shelves are inserted upon delivery.

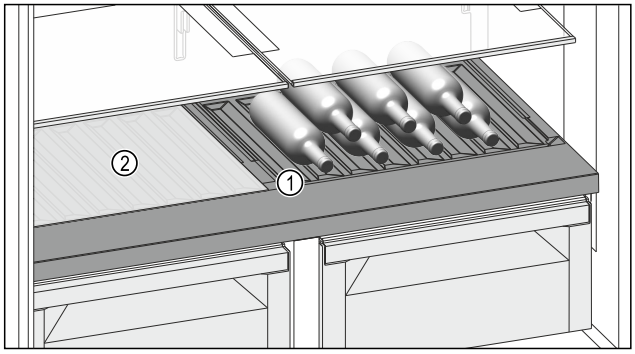

Fig. 131 Example illustration

(1) Variable bottle rack **(2)** Glass plate

9.3.1 Using the variable bottle shelf

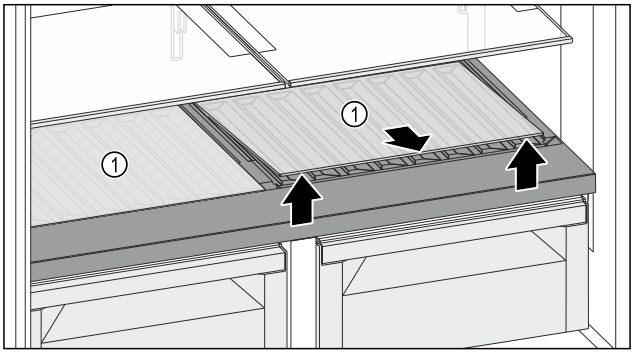

Fig. 132

▶ Lift one or both of the glass shelves *Fig. 132 (1)* in the front at the recess and pull it/them out.
▶ Store the glass shelf(ves) *Fig. 132 (1)* somewhere safe outside of the appliance.

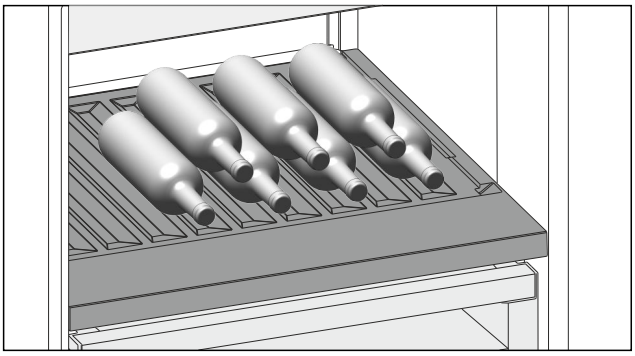

Fig. 133 Example illustration

▶ Insert the bottles facing backwards towards the rear wall. (see Fig. 133)

Note
If the bottles protrude towards the front over the variable bottle shelf:

▶ Set the lower door rack one position higher.

9.3.2 Using the glass shelves

Make sure that the following requirements are fulfilled:

❑ Bottles are removed.

❑ The variable bottle shelf has been cleaned. (see 10.5 Removing / inserting the variable bottle shelf) (see 10.8.4 Cleaning the equipment)

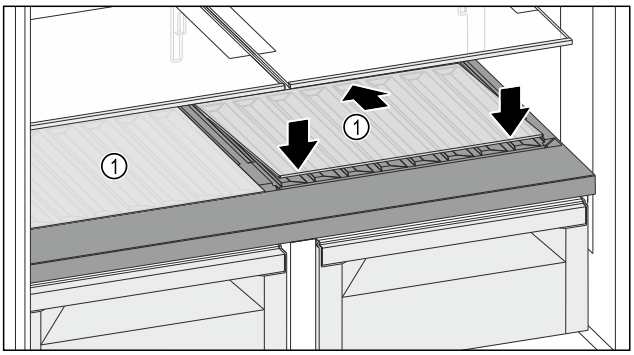

Fig. 134

▶ Place the glass shelf *Fig. 134 (1)* at an angle, tilted back and down.

▶ Lower the glass shelf *Fig. 134 (1)* at the front.

▶ Insert the second glass shelf in the same way.

9.4 Drawers

You can remove the drawers for cleaning.

The way to remove/insert the drawers varies depending on the pull-out system. Your appliance can contain a variety of pull-out systems.

Note
Insufficient ventilation results in an increase in energy consumption and reduction of the refrigerating performance.

▶ Leave the bottom drawer in the appliance.

▶ Always keep the fan air slots on the inside of the rear wall clear.

9.4.1 Drawer on appliance base or glass shelf

The drawer runs directly on the appliance base or on a glass shelf. There are no rails.

When you remove the drawers, you can use the glass shelves below them as storage shelves.

Removing drawer

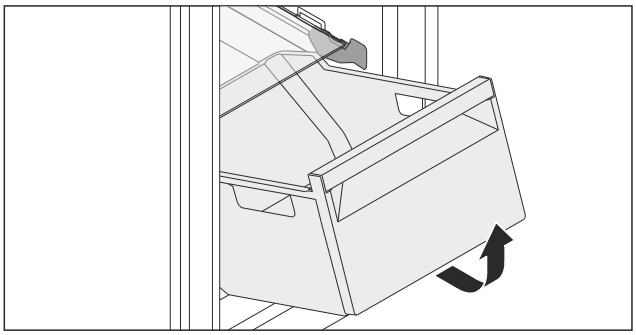

Fig. 135

▶ Remove drawer as shown in the diagram.

Inserting drawer

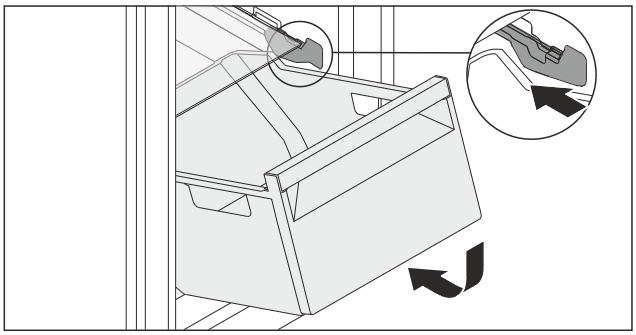

Fig. 136

▶ Insert drawer as shown in the diagram.

9.4.2 Drawer on telescopic rails

The drawer runs on full-extension rails (telescopic rails). There are full-extension telescopic rails and telescopic rails with partial pull-out. Drawers which are full extension can be pulled out fully from the appliance. Drawers with partial pull-out cannot be pulled out fully from the appliance. The system in your appliance depends on the type of appliance.

Full-extension drawer

You can recognize the full-extension drawer by a clamp at the front left and right of the rail.

Removing the drawer

Make sure that the following requirements are fulfilled:

❑ Fridge section: Door is open more than 90°.

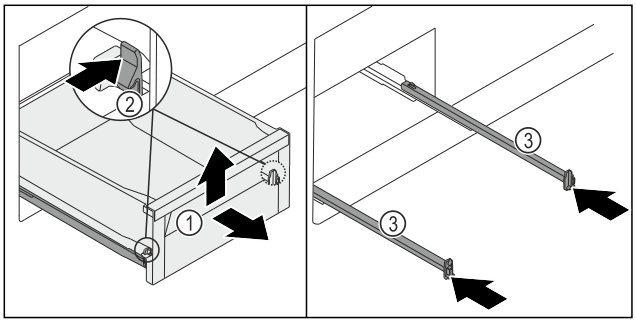

Fig. 137

▶ Pull out the drawer *Fig. 137 (1)* as far as it will go.

▶ Press the left and right clamp *Fig. 137 (2)* inward at the same time.

▷ The drawer *Fig. 137 (1)* is released from the rails.

▶ Lift up the drawer *Fig. 137 (1)* at the front.

▶ Remove the drawer *Fig. 137 (1)* from the front.

▶ Push in the rails *Fig. 137 (3)*.

Inserting the drawer

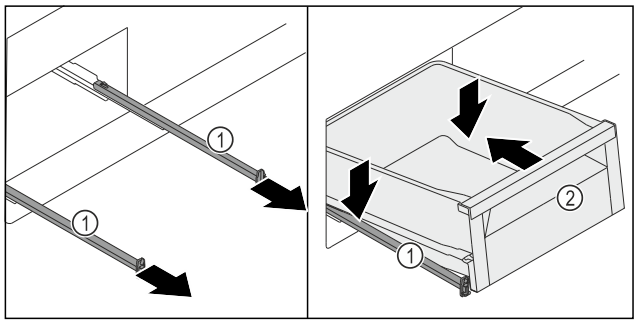

Fig. 138

- ▶ Pull out the rails *Fig. 138 (1)*.
- ▶ Hold the rails *Fig. 138 (1)* firmly and place the drawer *Fig. 138 (2)* diagonally from above onto the rails *Fig. 138 (1)*.
- ▶ Push the drawer *Fig. 138 (2)* on the rails *Fig. 138 (1)* to the back as far as it will go.

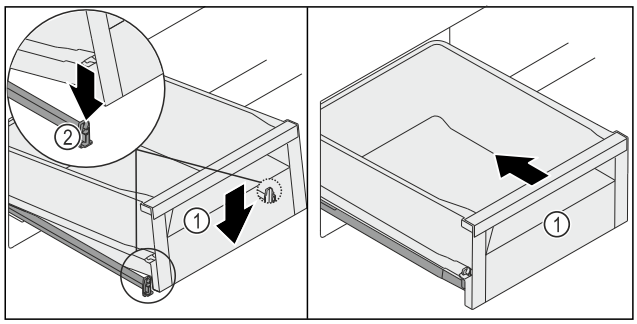

Fig. 139

- ▶ Lower the front of the drawer *Fig. 139 (1)* so that the drawer slides into the clamp *Fig. 139 (2)* on the left and right.
- ▷ The drawer *Fig. 139 (1)* latches in audibly.
- ▶ Push in the drawer *Fig. 139 (1)*.

9.5 Lid for BioFresh-safe

The lid ensures constant levels of humidity.

The lid is located directly on the drawer and can be covered by shelves or additional drawers.

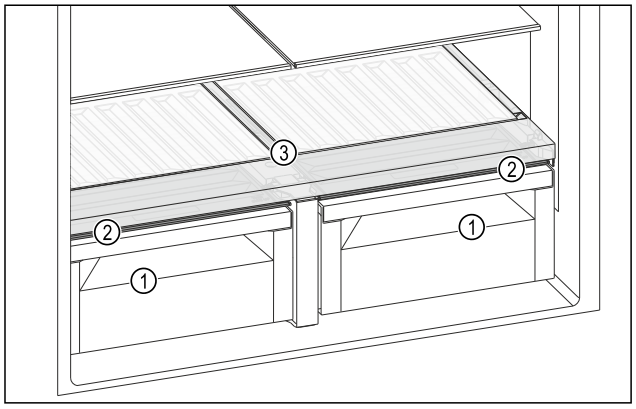

Fig. 140 Example illustration of the lid for BioFresh-safe

(1) BioFresh-safe
(2) Lid for BioFresh-safe
(3) Variable bottle rack

9.5.1 Reducing humidity in the drawer

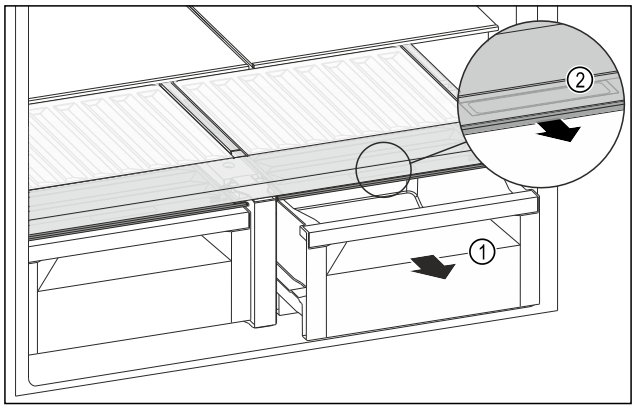

Fig. 141

- ▶ Pull out the drawer *Fig. 141 (1)*.
- ▶ Grip the handle recess *Fig. 141 (2)* on the lid while pulling the lid forward at the same time.
- ▶ Perform the same steps for the second lid.
- ▷ When the drawer is closed, there is a small gap between the lid and the drawer.

9.5.2 Increasing humidity in the drawer

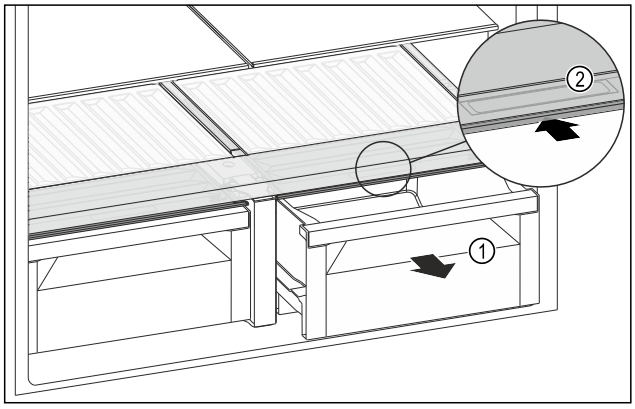

Fig. 142

- ▶ Pull out the drawer *Fig. 142 (1)*.
- ▶ Grip the handle recess *Fig. 142 (2)* on the lid while pulling the lid backward at the same time.
- ▶ Perform the same steps for the second lid.
- ▷ When the drawer is closed, the lid closes tightly with the drawer.

9.6 Glass shelves

You can remove the glass shelf under the drawers for cleaning.

9.6.1 Removing / inserting the glass shelf

Make sure that the following requirements are fulfilled:

- ❑ Glass shelf under the drawer: Drawer has been removed. (see 9.4 Drawers)

Removing glass shelf

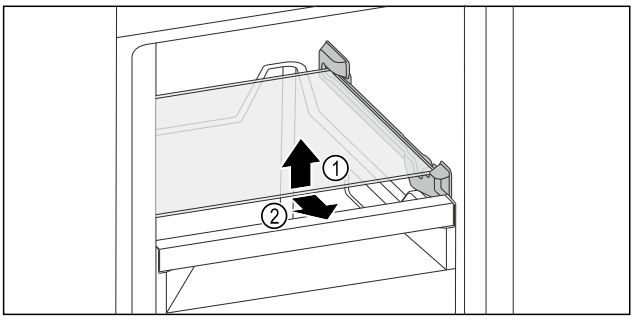

Fig. 143 Example illustration of the glass shelf

▶ Lift the front of the glass shelf.
▶ Remove the glass shelf from the front.

Inserting the glass shelf

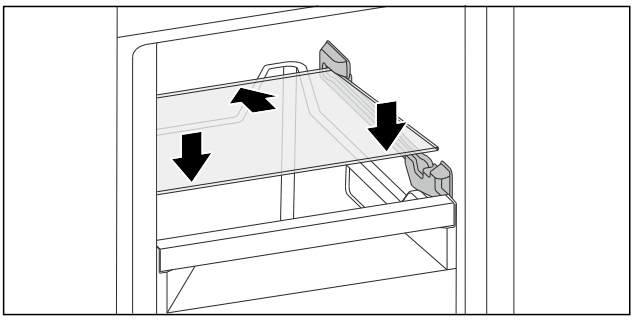

Fig. 144 Example illustration of the glass shelf

▶ Set down the glass shelf diagonally behind the stoppers.
▶ Lower glass shelf.
▶ Slide in glass shelf to the back.

9.7 IceMaker

The IceMaker is used exclusively for the production of ice cubes in household quantities.

Make sure that the following conditions are fulfilled

- IceMaker is cleaned. (see 10 Maintenance)
- IceMaker drawer is cleaned.
- IceMaker drawer is fully inserted.

9.7.1 Producing ice cubes

The production capacity depends on the freezer temperature The lower the temperature, the more ice cubes can be produced in a certain period

Once IceMaker is switched on for the first time, it can take up to 24 hours to produce the first ice cubes.

▶ Activate the IceMaker function.
▶ Making many ice cubes: Activate the MaxIce function.
▶ Distribute ice cubes evenly in the drawer to increase its capacity.
▶ Close the drawer: The IceMaker starts making ice again.

Note
When a certain level is reached in the IceMaker drawer, it stops making ice cubes. The IceMaker does not fill the drawer to the very top.

9.8 Egg rack

You can pull out and turn the egg rack. You can use both sides of the egg rack so you can label specifics like the purchase date.

9.8.1 Using the egg rack

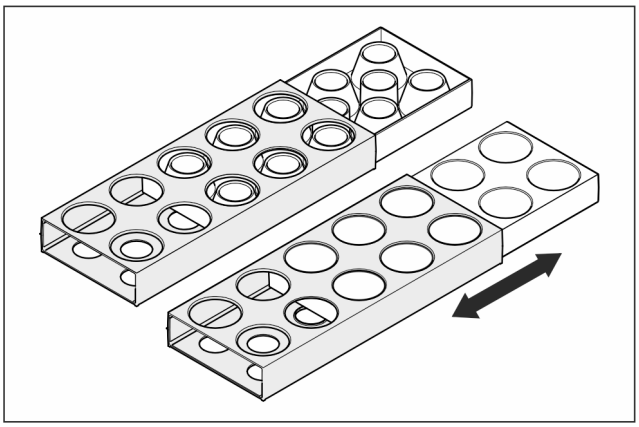

Fig. 145

▶ Top section: store hen eggs.
▶ Bottom section: store quail eggs.

9.9 Bottle rack

9.9.1 Using the bottle rack

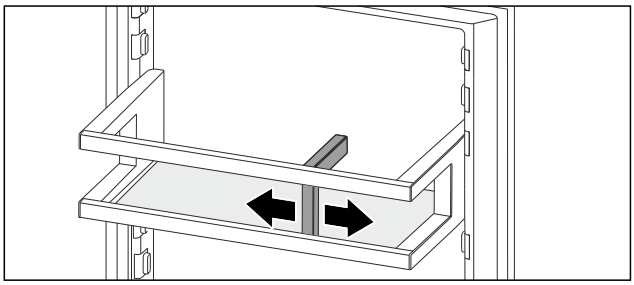

Fig. 146

▶ Slide the bottle rack at the edges.
▷ Stops bottles from tipping over.

10 Maintenance

10.1 FreshAir carbon filter

The FreshAir carbon filter is located in the compartment above the fan.

It guarantees the best air quality.

❑ Change the carbon filter every 6 months.
When the reminder is set, a message on the display prompts you to change it.
❑ You can dispose of the carbon filter with the regular household waste.

Note
FreshAir activated charcoal filters can be purchased from the Liebherr-Hausgeräte store at go.liebherr.com/47wtc4.

10.1.1 Removing the FreshAir carbon filter

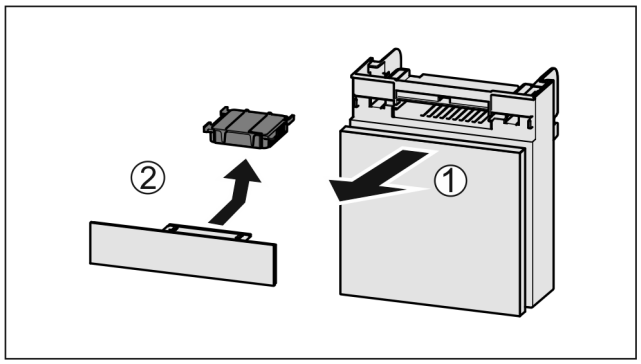

Fig. 147

▶ Pull out the compartment *Fig. 147 (1)*.
▶ Remove the carbon filter *Fig. 147 (2)*.

10.1.2 Inserting the FreshAir carbon filter

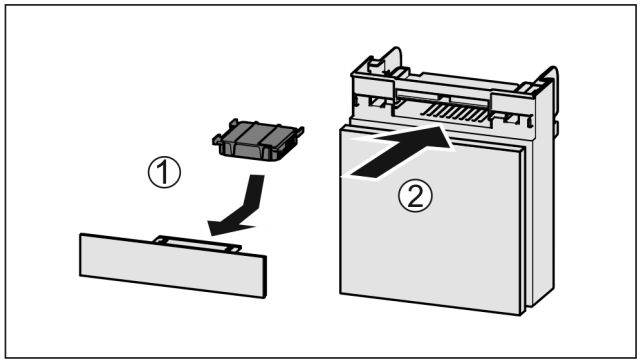

Fig. 148

▶ Insert the carbon filter as shown in the diagram *Fig. 148 (1)*.
▷ The carbon filter clicks into place.
If the carbon filter is pointing downwards:
▶ Push the compartment in *Fig. 148 (2)*.
▷ The carbon filter is now ready for use.

10.2 Disassembling the door racks

You can disassemble some of the door racks if you want to clean the door racks or if you'd like to insert or remove replacement parts.

10.2.1 Disassembling the door racks

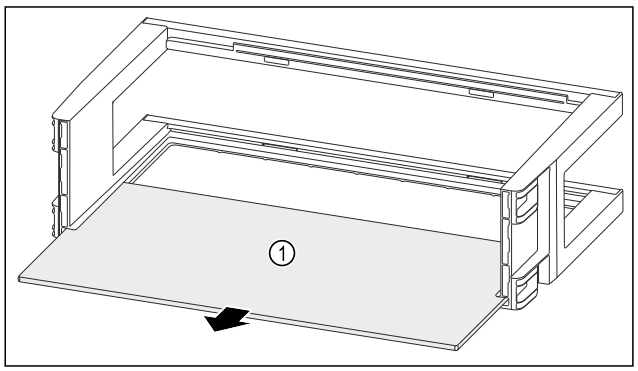

Fig. 149

▶ Remove the shelf *Fig. 149 (1)*.

10.2.2 Disassembling the fold-down door racks

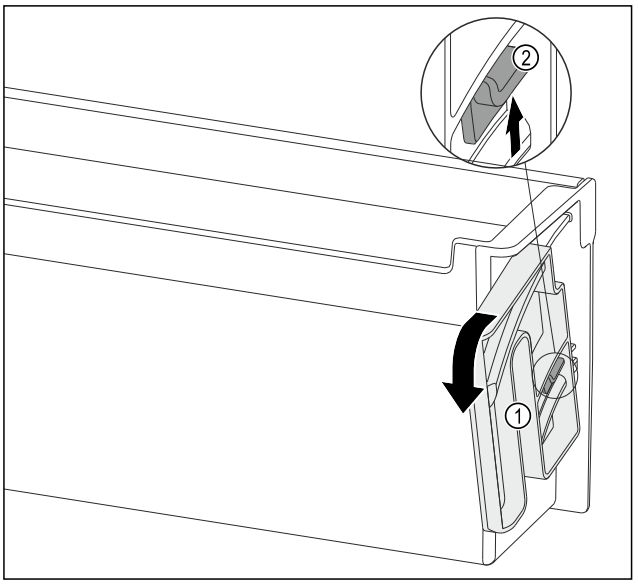

Fig. 150

▶ Turn the swivel unit *Fig. 150 (1)* in the specified direction as far as it goes.
▶ Push the tab *Fig. 150 (2)* up and remove the swivel unit *Fig. 150 (1)*.

10.3 Assembling the door racks

10.3.1 Assembling the door racks

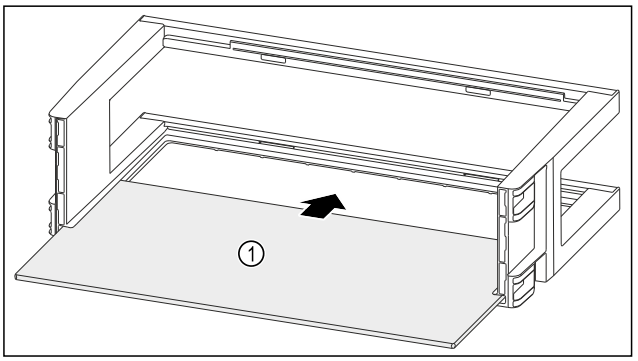

Fig. 151

▶ Push the shelf *Fig. 151 (1)* into the side recesses.

10.3.2 Assembling the fold-down door racks

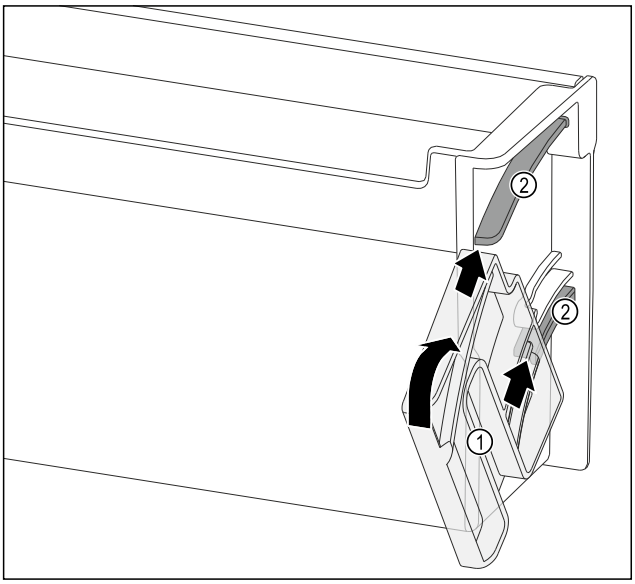

Fig. 152

▶ Position the swivel unit *Fig. 152 (1)* so that the recesses are exactly opposite the guide channels *Fig. 152 (2)* of the door racks.
▶ Turn the swivel unit *Fig. 152 (1)* in the specified direction.

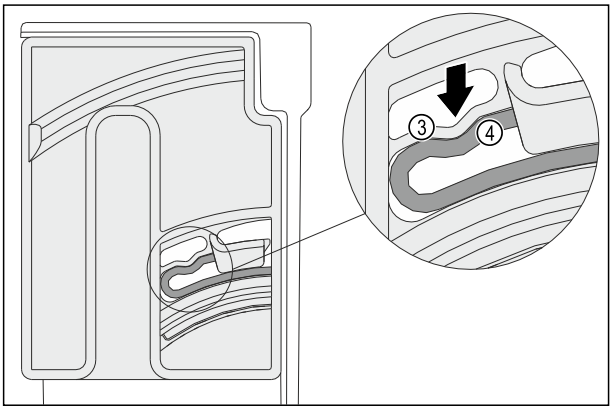

Fig. 153

▷ The elastic element *Fig. 153 (3)* of the swivel unit clicks audibly in the round mold of the ridge *Fig. 153 (4)*.

10.4 Disassembling / assembling pull-out systems

10.4.1 Notes on disassembly

You can disassemble some of the pull-out systems for cleaning. Your appliance can contain a variety of pull-out systems.

The following pull-out systems can be disassembled or cannot be disassembled:

Pull-out system	can be disassembled / cannot be disassembled
Drawer on appliance base or glass shelf	cannot be disassembled
Full extension	cannot be disassembled

10.5 Removing / inserting the variable bottle shelf

You can remove the variable bottle shelf for cleaning.

10.5.1 Removing the variable bottle shelf

Make sure that the following requirements are fulfilled:

❑ Bottles are removed.
❑ Glass shelves are removed. (see 9.3.1 Using the variable bottle shelf)

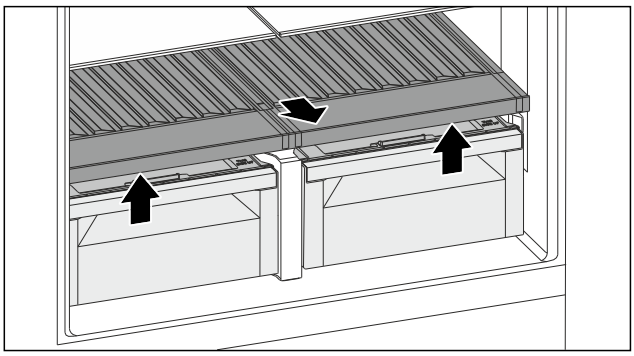

Fig. 154

▶ Lift the variable bottle shelf from the front and pull it out.
▷ The compartment lids are visible.

Note
Liebherr recommends:
Do not store any product on the compartment lids below it.

10.5.2 Inserting the variable bottle shelf

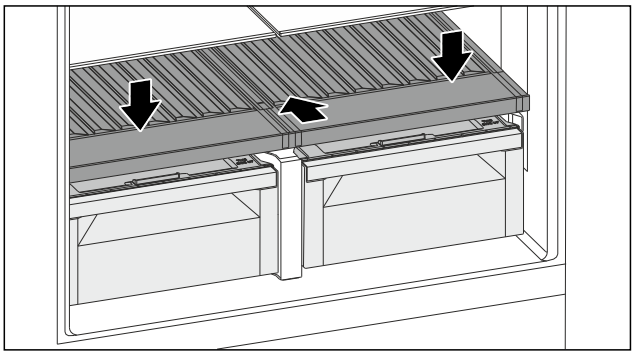

Fig. 155

▶ Push in the variable bottle shelf as far as it goes and press it down.
▷ The back plugs on the variable bottle shelf are connected automatically.
▷ LED light ups.
▶ Insert the glass shelves. (see 9.3.2 Using the glass shelves)

-or-

▶ Use the variable bottle shelf for bottles.

10.6 Lid for BioFresh-safe

You can remove one or both lids for cleaning.

10.6.1 Removing the lid

Make sure that the following requirements are fulfilled:

❑ The glass plates directly above the variable bottle rack have been removed.
❑ The variable bottle rack has been removed.
❑ The drawer directly below the lid has been removed. (see 9.4 Drawers)

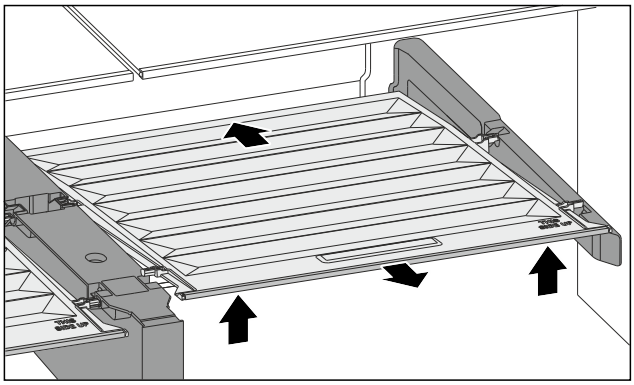

Fig. 156

▶ Push the lid backward.
▶ Lift up the lid forward.
▶ Remove the front lid by lifting it up at an angle.

10.6.2 Inserting the lid

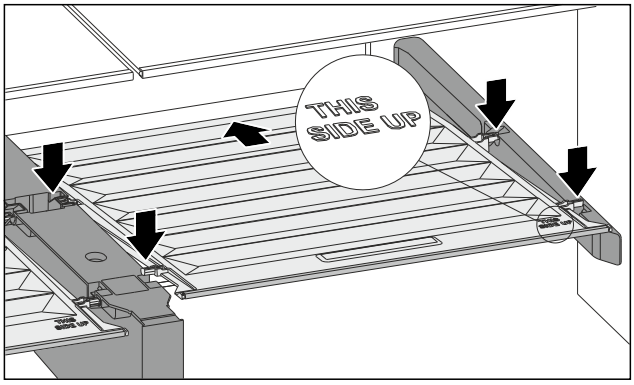

Fig. 157

If the lettering THIS SIDE UP is on top:

▶ Insert the rear bracket retainers in the corresponding rear openings.
▶ Push the lid backward.
▶ Lower the lid at the front and latch the front bracket retainers in the openings.
▶ Bring the lid to the desired position.

10.7 Defrosting the appliance

10.7.1 Defrosting the refrigerator compartment

Defrosting is performed automatically. The water from the thawing process runs out via the drain opening and is evaporated.

Water droplets or a thin layer of frost or ice can form on the rear wall; this is a completely normal part of the appliance's function. You do not have to remove them.*

A frost or ice layer may form briefly due to the energy-optimized control of the appliance.*

▶ Clean the drain hole regularly. (see 10.8 Cleaning the appliance)

10.7.2 Defrosting the freezer compartment with NoFrost

Defrosting is performed automatically by the NoFrost system. The moisture condenses on the evaporator and is periodically defrosted and evaporated.

The appliance does not need to be defrosted.

10.8 Cleaning the appliance

10.8.1 Preparation

WARNING
Danger of electric shock.
▶ Unplug refrigerator or disconnect power.

WARNING
Risk of fire!
▶ Do not damage the refrigerant circuit.

▶ Empty the appliance.
▶ Pull out the power plug.
-or-
▶ Activate CleaningMode. (see CleaningMode)

10.8.2 Cleaning the housing

NOTICE
Improper cleaning!
Damage to the appliance.
▶ Only use soft cleaning cloths and ph-neutral all-purpose cleaners.
▶ Do not use steel wool or sponges that scour or scratch.
▶ Do not use caustic or abrasive cleaning materials or those containing sand, chloride, or acids.

WARNING
Risk of injury or damage due to hot steam.
Hot steam can cause scalding/burns and damage to surfaces.
▶ Do not use steam cleaners.

▶ Wipe the housing down with soft, clean cloth. If very dirty, use lukewarm water with a neutral cleaner. Glass surfaces can also be cleaned with glass cleaner.

10.8.3 Cleaning the interior

NOTICE
Improper cleaning!
Damage to the appliance.
▶ Only use soft cleaning cloths and ph-neutral all-purpose cleaners.
▶ Do not use steel wool or sponges that scour or scratch.
▶ Do not use caustic or abrasive cleaning materials or those containing sand, chloride, or acids.

▶ Plastic surfaces: clean by hand with a soft clean cloth, lukewarm water and a little detergent.
▶ Metal surfaces: clean by hand with a soft clean cloth, lukewarm water and a little detergent.
▶ Drain hole: remove any deposits with a thin item such as a cotton bud.

10.8.4 Cleaning the equipment

NOTICE
Improper cleaning!
Damage to the appliance.
▶ Only use soft cleaning cloths and ph-neutral all-purpose cleaners.
▶ Do not use steel wool or sponges that scour or scratch.
▶ Do not use caustic or abrasive cleaning materials or those containing sand, chloride, or acids.

Clean with a soft, clean cloth, lukewarm water and a little washing up liquid:

- Shelf
- Lid for Fruit & Vegetable-safe
- Drawer
  Please note: Do not remove the magnet on the drawer. The magnet ensures that the IceMaker functions.
- Variable bottle shelf

Clean with a damp cloth:

- Retracting rails
  Please note: the grease in the tracks is there for lubrication purposes and must not be removed!

Clean in the dishwasher up to 60 °C:

- Door racks
- Bottle rack
- Egg rack
- Ice cube scoop

▶ Disassemble the equipment: see the relevant section.
▶ Clean the equipment.

10.8.5 Cleaning the IceMaker

There are various options for cleaning the IceMaker.

We recommend cleaning in the following situations:

❑ Initial commissioning
❑ With water connection:
If out of use for longer than 5 days.

Make sure that the following requirements are met:

❑ IceMaker drawer is emptied.
❑ IceMaker drawer is fully inserted.
❑ The IceMaker has been activated.

On first use or if not used for prolonged periods

Clean the IceMaker with TubeClean.

▶ Put an empty 1.5 l vessel (max. height 10 cm) in the drawer under the IceMaker.
▶ Activate the TubeClean function.
▷ The rinse process is prepared (max. 60 min.): The symbol flashes.
▷ Water pipes are rinsed: Symbol flashes.
▷ Rinsing process is complete: Function turns off automatically.
▶ Take out the IceMaker drawer and remove the container.
▶ Clean the IceMaker drawer with warm water and a little detergent.
▶ Push in the IceMaker drawer.
▷ Ice cube production starts automatically.

Without water filter

▶ Dispose of any ice cubes that are produced within 24 hours of the first ice cube production.

When cleaning is required

Clean the IceMaker manually.

▶ Remove the IceMaker drawer and clean with warm water and a little detergent.
▶ Push in the IceMaker drawer.
▷ Ice cube production starts automatically.

10.8.6 After cleaning

▶ Wipe dry the appliance and items of equipment
▶ Connect and switch on the appliance.
▶ Activate SuperFrost (see 8.2 Appliance functions) .
▶ Repeat cleaning regularly.

11 Customer support

11.1 Technical specifications

Temperature zone	
Cool:	3 °C to 9 °C
BioFresh	0 °C to 3 °C
Freezing	-24 °C to -15 °C
VarioTemp-Zone	-18 °C to +5 °C

Maximum amount of food to freeze / 24 hours	
Freezer	See type plate under “freezer capacity .../ 24 h”

Maximum loading weight of the features	
Left fridge section door	12 kg
Right fridge section door	12 kg
Left freezer section door	1 kg
Right freezer section door	1 kg
Top drawer freezer section	15 kg
Middle drawer freezer section	15 kg
Bottom drawer freezer section	10 kg

Ice cube production with IceMaker	
Ice cube production / 24 hours	At a temperature of -18 °C: 1.2 kg ice cubes
Maximum ice cube production / 24 hours	If MaxIce function is active: 1.4 kg ice cubes

Lighting	
Energy efficiency class[1]	Light source
This product contains one or more energy efficiency class G light sources.	LED

[1] *The appliance may contain light sources with different energy efficiency classes. The lowest energy efficiency class is indicated.*

For appliances with a WiFi connection:

Frequency specification	
Frequency band	2.4 GHz
Maximum radiated power	< 100 mW
Purpose of the wireless equipment	Integration in the local WiFi network for data communication

11.2 Operating noises

The appliance makes noises while in operation.

- At **less cooling output** the appliance saves energy but takes longer to cool items. The volume is **lower**.
- At a **high cooling capacity**, food cools faster. The noise level is **higher**.

  Examples:

  - Activated functions (see 8.2 Appliance functions)
  - Running fan

- Freshly sorted food
- High ambient temperature
- Door opened for long periods

Noise	Possible cause	Type of noise
Bubbling and splashing	Coolant is flowing into the cooling circuit.	Normal noise
Spitting and hissing	Coolant is spraying into the cooling circuit.	Normal noise
Humming	The appliance cools. The volume depends on the cooling output.	Normal noise
Whirring and murmuring	The fan is running.	Normal operating noise
Clicking	Components are being switched on and off.	Normal switching noise
Rattling or humming	Valves are active.	Normal switching noise

Noise	Possible cause	Type of noise	How to resolve
Vibration	Unsuitable setup	Error noise	Adjust the feet to make sure the appliance is horizontal.

Noise	Possible cause	Type of noise	How to resolve
Clattering	Equipment, Objects inside the appliance	Error noise	Secure equipment parts. Leave a gap between items.

11.3 Technical faults

Your appliance is designed and manufactured for reliable operation and a long service life. If a malfunction nonetheless occurs during operation, please check whether the malfunction is due to an operating error. In this case, you will have to be charged for the costs incurred, even during the warranty period.

You may be able to rectify the following faults yourself.

11.3.1 Appliance function

Defect	Cause	Remedy
The appliance does not work.	→ The appliance is not switched on.	▶ Switch on the appliance.
	→ The power plug is not properly inserted in the wall socket.	▶ Check the power plug.
	→ The powerfuse in the wall socket is not OK.	▶ Check the fuse.
	→ Power failure.	▶ Keep the appliance closed. ▶ Protect food: Place cold storage batteries on the food or use another freezer appliance if the power failure lasts longer. ▶ Do not re-freeze defrosted food.
	→ The IEC socket is not correctly plugged into the appliance.	▶ Check the IEC socket.
The temperature is not cold enough	→ This means that the door of the appliance is not closed properly	▶ Close the appliance door
	→ The ambient temperature is too high	▶ Problem solution: (see 1.8 Climate classes)
	→ The appliance was opened too frequently or for too long	▶ Wait to see if the required temperature corrects itself. If not, contact Customer Service. (see 11.4 Customer Service)
	→ Too much fresh food was placed inside without SuperFrost.	▶ Solution: (see SuperFrost)
	→ The appliance is too near to a heat source (stove, heater etc).	▶ Change location of appliance or the heat source.
The temperature shown on the	→ The appliance door was open too long, which automatically triggered	▶ Close the appliance door.

Defect	Cause	Remedy
display is higher than the actual temperature inside the appliance.	the door alarm. The appliance cools more intensively as a result.	
The door seal is defective or should be replaced for other reasons.	→ The door seal is interchangeable. You can replace it without the use of any special tools.	▶ Contact Customer Service. (see 11.4 Customer Service)
The closing damper is defective or should be replaced for other reasons.*	→ The closing damper can be replaced. It can be changed out without any additional tools.	▶ Contact Customer Service. (see 11.4 Customer Service)
The appliance is iced up or condensation is building.	→ The door seal may have slipped out of its groove.	▶ Check the door seal is well placed in the groove.
The appliance is warm on the exterior surfaces.*	→ The heat of the refrigerant circuit is used to prevent condensate from forming	▶ This is normal.

11.3.2 Equipment

Defect	Cause	Remedy
The IceMaker cannot be switched on.	→ The appliance and therefore the IceMaker are not connected.	▶ Connect the appliance (see Installation Guide).
The IceMaker is not making any ice cubes.	→ The IceMaker is not switched on.	▶ Activate the IceMaker.
	→ The drawer of the IceMaker is not properly closed	▶ Close the drawer properly
	→ The water connection is not open	▶ Open the water connection
The interior light does not turn on.	→ The appliance is not switched on.	▶ Switch on the appliance.
	→ The door was open for more than 15 minutes.	▶ If the door is open, the interior lighting switches off automatically after about 15 minutes.
	→ The LED interior light is faulty or the lid is damaged.	▶ Contact Customer Service. (see 11.4 Customer Service)

11.4 Customer Service

First check whether you can rectify the fault yourself (see 11 Customer support) . If you cannot rectify the problem, contact Customer Service.

You can find the address in the enclosed brochure “Liebherr-Service” or at home.liebherr.com/service.

WARNING
Unprofessional repair!
Injuries.
- ▶ Repairs and work on the appliance and the power supply cable not described in the Manual (see 10 Maintenance) should only be carried out by a qualified service provider.
- ▶ A damaged power cable may only be replaced by the manufacturer, the manufacturer’s Customer Service or a similarly qualified person.
- ▶ For appliances with an IEC connector, the change can be made by the customer.

11.4.1 Contacting Customer Service

Make sure that the following appliance information is available:

- ❑ Appliance name (model and index)
- ❑ Service no. (service)
- ❑ Serial no. (S no.)

- ▶ Take note of the appliance information.
- ▶ Notify customer service: Report errors and the appliance information.
- ▷ This will help us give you fast and accurate support.
- ▶ Follow further instructions from Customer Service.

11.5 Rating plate

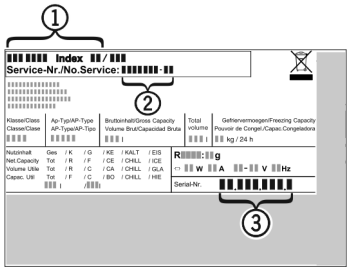

Fig. 158

(1) Appliance name
(2) Service no.
(3) Serial no.

▶ Information from the nameplate.

12 Decommissioning

▶ Empty appliance.
▶ Switch off appliance. (see Switching appliance off and on)
▶ Pull the power plug from the outlet.
▶ If necessary, remove the IEC socket: Pull the IEC socket out of the appliance plug while turning it to the left and right at the same time.
▶ Clean appliance. (see 10.8 Cleaning the appliance)
▶ Leave the door open to prevent unpleasant odors.

13 Disposal

Make sure that the following requirements are met:

❑ The meaning of the symbols on the appliance is known.
❑ The information about disposal is known. (see 1.6 Disposal Instructions)

13.1 Preparing the appliance disposal

▶ Take the appliance out of operation. (see 12 Decommissioning)

13.2 Environmentally friendly disposal of the appliance

WARNING
Risk of fire due to escaping refrigerant and oil!
The refrigerant inside the appliance is environmentally friendly, but flammable. The oil used is also flammable. If the refrigerant and oil escape in high concentrations and come into contact with an external heat source, they can ignite.
▶ Avoid damaging the refrigerant lines and compressor.

▶ Observe the notes on appliance transport. (see 3.6 Transporting the appliance)
▶ Transport the appliance away without damaging it.
▶ Dispose of the appliance as specified.

Scan QR Code and find digital operating and installation instructions.



home.liebherr.com

20260908 7086817-00

Liebherr-Hausgeräte Marica EOOD
Bezirk Plovdiv
4202 Radinovo
Bulgarien