Gebrauchsanweisung
Instructions for use
Mode d'emploi
Gebruiksaanwijzing
Istruzioni per l'uso

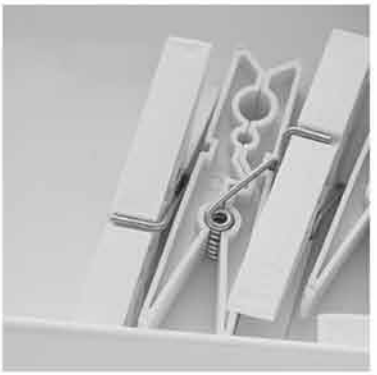

Brugsanvisning
Bruksanvisning
Käyttöohje
Manual de utilização
Instrucciones para el uso





Οδηγίες χρήσης
Instrukcje użytkowania
Használati utasítás
Инструкция за употреба



Návod k použití
Návod na použitie
Instrucţiuni de utilizare
Инструкции по эксплуатации

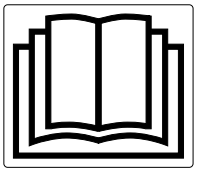

IMPORTANT SAFETY INSTRUCTIONS

- **WARNING**: to avoid a hazard due to instability, positioning or fixing of the appliance must be done in accordance with the manufacturer instructions.
- **WARNING:** keep the appliance ventilation openings clear of obstruction.
- **WARNING:** do not damage the appliance refrigerant circuit pipes.
- **WARNING:** Do not use mechanical, electric or chemical means other than those recommended by the Manufacturer to speed up the defrost process.
- **WARNING:** Do not use or place electrical devices inside the appliance compartments if they are not of the type expressly authorised by the Manufacturer.
- **WARNING:** ice-makers and/ or water dispensers not directly connected to the water supply must be filled with potable water only.

Information: This appliance does not contain CFCs. The refrigerant circuit contains R600a (HC).

- Appliances with Isobutane (R600a): isobutane is a natural gas without environmental impact, but is flammable. Therefore, make sure the refrigerant circuit pipes are not damaged. Keep special attention in case of damaged pipes emptying the refrigerant circuit.
- C-Pentane is used as blowing agent in the insulation foam and it is a flammable gas. Pay special attention during disposal operations.
- This appliance is intended to be used in household and similar applications such as
  - staff kitchen areas in shops, offices and other working environments;
  - farm houses and by clients in hotels, motels and other residential type environments;
  - bed and breakfast type environments;
  - catering and similar non-retail applications
- Do not store explosive substances such as aerosol cans with a flammable propellant in this appliance.
- This appliance can be used by children aged from 8 years and above and persons with reduced physical, sensory or mental capabilities or lack of experience and knowledge if they have been given supervision or instruction concerning use of the appliance in a safe way and understand the hazards involved.
- Cleaning and user maintenance shall not be made by children without supervision.
- To avoid the risk of children becoming trapped and suffocating, do not allow them to play or hide inside the appliance.

- It must be possible to disconnect the appliance from the power supply by unplugging it if plug is accessible, or by means of an accessible multi-pole switch installed upstream of the socket in conformity with national safety standards.
- Plug the appliance into a grounding socket: the appliance must be correctly connected to an approved earthing system.
- Do not use single/multi adapters or extension cords.
- During installation, make sure the appliance does not damage the power cable.
- Do not pull the aplliance power cable
- The appliance must be handled and installed by two or more persons.
- In order to avoid an hazard, installation and maintenance, including Power cable replacement, must be carried out by a qualified technician, in compliance with the manufacturer's instructions and the local safety regulations in force. Do not repair or replace any part of the appliance unless specifically stated in the user manual.

SAFEGUARDING THE ENVIRONMENT

1. Packing
The packing material is 100% recyclable and bears the recycling symbol ♺. For disposal, comply with the local regulations. Keep the packing materials (plastic bags, polystyrene parts, etc.) out of the reach of children, as they are a potential source of danger.

2. Scrapping/Disposal
The appliance is manufactured using recyclable material.
This appliance is marked in compliance with European Directive 2012/19/EU on Waste Electrical and Electronic Equipment (WEEE). By ensuring the correct disposal of this appliance, you can help prevent potentially negative consequences for the environment and the health of persons.

The symbol  on the appliance, or on the accompanying documents, indicates that this appliance should not be treated as domestic waste but must be taken to a special collection centre for the recycling of electrical and electronic equipment.
When scrapping the appliance, make it unusable by cutting off the power cable and removing the doors and shelves so that children cannot easily climb inside and become trapped.
Scrap the appliance in compliance with local regulations on waste disposal, taking it to a special collection centre; do not leave the appliance unattended even for a few days, since it is a potential source of danger for children.
For further information on the treatment, recovery and recycling of this product, contact your competent local office, the household waste collection service or the shop where you purchased the appliance.

Declaration of conformity CE
- This appliance has been designed for preserving food and is manufactured in compliance with Regulation (CE) No. 1935/2004.
- This appliance has been designed, manufactured and marketed in compliance with:
  - safety objectives of the "Low Voltage" Directive 2006/95/CE (which replaces 73/23/CEE and subsequent amendments);
  - the protection requirements of Directive "EMC" 2004/108/EC.

BEFORE USING THE APPLIANCE

To ensure best use of your appliance, carefully read the operating instructions which contain a description of the product and useful advice. Keep these instructions for future reference.

1. After unpacking the appliance, make sure it is not damaged and that the door closes properly. Any damage must be reported to the dealer within 24 hours of delivery of the appliance.
2. Wait at least two hours before switching the appliance on, to ensure that the refrigerant circuit is fully efficient.
3. Clean the inside of the appliance before using it.

PRECAUTIONS AND GENERAL RECOMMENDATIONS

INSTALLATION

- Be careful not to damage the floors (e.g. parquet) when moving the appliance.
- Make sure the appliance is not near a heat source.
- Install and level the appliance on a floor strong enough to take its weight and in a place suitable for its size and use.
- The appliance is arranged for operation in places where the temperature comes within the following ranges, according to the climatic class given on the rating plate. The appliance may not work properly if it is left for a long time at a temperature outside the specified range.

Climatic Class	Amb. T. (°C)
SN	From 10 to 32
N	From 16 to 32
ST	From 16 to 38
T	From 16 to 43

- Make sure the voltage specified on the rating plate corresponds to that of your home.

SAFE USE

- Do not store or use petrol, flammable liquids or gas in the vicinity of this or other electrical appliances. The fumes can cause fires or explosions.
- Do not swallow the contents (non-toxic) of the ice packs (in some models).
- Do not eat ice cubes or ice lollies immediately after taking them out of the freezer since they may cause cold burns.
- For products designed to use an air filter inside an accessible fan cover, the filter shall be always in position when the refrigerator is in function.
- Before carrying out any maintenance or cleaning operation, unplug the appliance or disconnect it from the power supply.
- Use the refrigerator compartment only for storing fresh food and the freezer compartment only for storing frozen food, freezing fresh food and making ice cubes.
- Do not store glass containers with liquids in the freezer compartment since they may break.
- Avoid storing unwrapped food in direct contact with internal surfaces of the refrigerator or freezer compartments.
- “The bulb used inside the appliance is specifically designed for domestic appliances and is not suitable for general room lighting within the home (EC Regulation 244/2009)”.

The Manufacturer declines any liability for injury to persons or animals or damage to property if the above advice and precautions are not respected.

ELECTRICAL CONNECTION FOR GREAT BRITAIN AND IRELAND ONLY

Warning - this appliance must be earthed

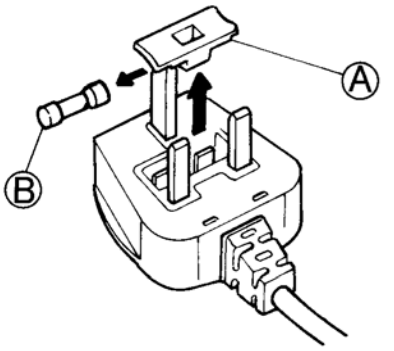

Fuse replacement
If the mains lead of this appliance is fitted with a BS 1363A 13amp fused plug, to change a fuse in this type of plug use an A.S.T.A. approved fuse to BS 1362 type and proceed as follows:

1. Remove the fuse cover (**A**) and fuse (**B**).
2. Fit replacement 13A fuse into fuse cover.
3. Refit both into plug.

Important:
The fuse cover must be refitted when changing a fuse and if the fuse cover is lost the plug must not be used until a correct replacement is fitted.
Correct replacement are identified by the colour insert or the colour embossed in words on the base of the plug.
Replacement fuse covers are available from your local electrical store.

For the Republic of Ireland only
The information given in respect of Great Britain will frequently apply, but a third type of plug and socket is also used, the 2-pin, side earth type.

Socket outlet / plug (valid for both countries)
If the fitted plug is not suitable for your socket outlet, please contact After-sales Service for further instruction. Please do not attempt to change plug yourself. This procedure needs to be carried out by a qualified technician in compliance with the manufactures instructions and current standard safety regulations.

ENERGY-SAVING TIPS

- Install the appliance in a dry, well ventilated room far away from any heat source (e.g. radiator, cooker, etc.) and in a place not exposed directly to the sun. If required, use an insulating plate.
- To guarantee adequate ventilation follow installation instructions.
- Insufficient ventilation on back of the product increases energy consumption and decreases cooling efficiency.
- The internal temperatures of the appliance may be affected by the ambient temperature, frequency of door opening, as well as location of the appliance. Temperature setting should take into consideration these factors.
- Allow warm food and drinks to cool down before placing in the appliance.
- Do not obstruct the fan (if available) with food items.
- After placing the food check if the door of compartments closes properly, especially the freezer door.
- Reduce to a minimum door opening.
- When thawing frozen food, place them in the refrigerator. The low temperature of the frozen products cools the food in the refrigerator.
- Appliances could have special compartments (Fresh Food Compartment, Zero Degree Box,...). In case not differently specified in the specific booklet of product, they can be removed, maintaining equivalent performances.
- Positioning of the shelves in the refrigerator has no impact on the efficient usage of energy. Food should be placed on the shelves in such way to ensure proper air circulation (food should not touch each other and distance between food and rear wall should be kept).
- You can increase storage capacity of frozen food by removing baskets and, if present, Stop Frost shelve, maintaining an equivalent energy consumption.
- Damaged gasket must be replaced as soon as possible.
- High energy class products are fitted with high-efficiency motors that remain operational for longer, but have a low power consumption. Do not worry if the engine continues to run for longer periods.