KYOCERA

Ecosys FS-1920/3820N/3830N Laser Printers

PARTS LIST

Published on January 30, 2004
2FP70770 2FY70770 2FR70770
842FP120 842FY120 842FR120

Contents

Enclosure (01-)	3
Upper Frame Unit (02-)	5
Drive Unit (03-)	8
Controller Box (04-)	10
Paper Feed Unit (05-)	12
Fuser Unit (06-)	15
Drum Unit (07-)	18
Developer Unit	20
Frame MP Assembly (11-)	22
Paper Cassette (13-)	24
Tray MP Assembly (20-)	27
Packing Assemblies (P-)	29
Accessories (A-)	30

Notes on Ordering

- Parts with + are component parts or sub-assemblies of the assembly appearing above them.
- Parts with ++ are component parts of the assembly marked with + immediately above them.
- SP means service parts that are available for ordering.

1. Enclosure (01-)

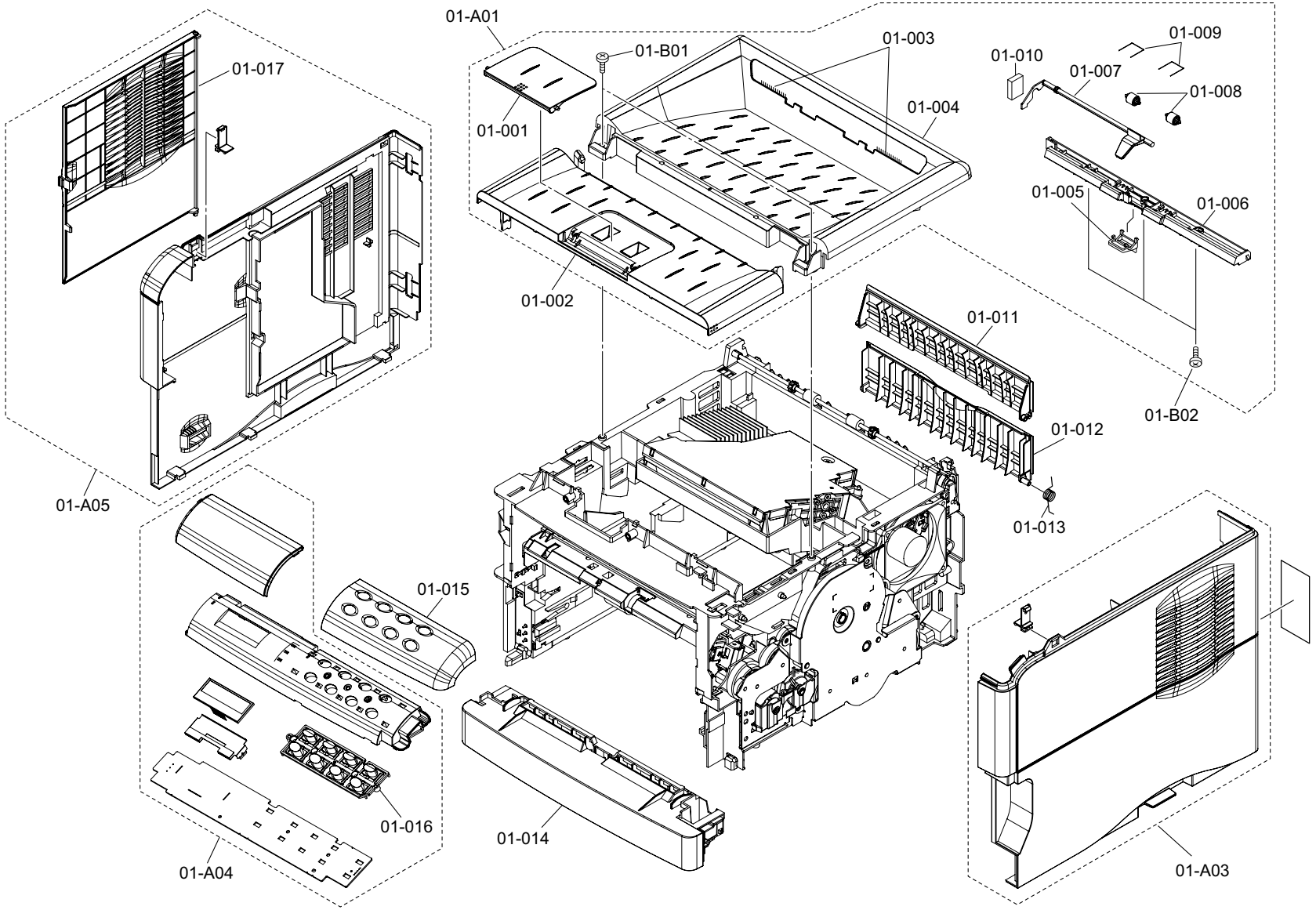

List 1 - Enclosure (01-)

Ref. No.		Part Code	Alternative	Description	Applicable Model	SP	120V	230V	Remarks
01-A01		2FP04040		COVER TOP ASSY	FS-1920	X	-	1	
01-A01		2FP04050		COVER TOP ASSY	FS-1920	X	1	-	
01-A01		2FR04010		COVER TOP ASSY	FS-3820N/3830N	X	-	1	
01-A01		2FR04020		COVER TOP ASSY	FS-3820N/3830N	X	1	-	
01-001	+	2BS04070	5MVB662SH024	STOPPER FD		-	1	1	
01-002	+	2B104170	5MVB874CH010	LID TOP	FS-1920	-	-	1	
01-002	+	2B104180	5MVB874CH011	LID TOP	FS-1920	-	1	-	
01-002	+	2BR04410	5MVB874CH005	LID TOP CHU	FS-3820N/3830N	-	-	1	
01-002	+		5MVB874CH007	LID TOP S	FS-3820N/3830N	-	1	-	
01-003	+	2BP21010	5MVS711XF003	DISCHARGER FD		-	2	2	
01-004	+	2BS04140	5MVB886CH010	COVER TOP		-	1	1	
01-005	+	2BS04300	5MVX332DB014	GUIDE STOCK		X	1	1	
01-006	+	2BS04340	5MVX852CH002	FRAME FD		-	1	1	
01-007	+	2BS04310	5MVX732CB003	ACTUATOR FD		X	1	1	
01-008	+	2BS04170	5MVM273DB006	ROLLER PINCH		X	2	2	
01-009	+	2BS04050	5MMW251LD046	SPRING PINCH		-	2	2	
01-010	+	2FP04020		SPACER FD A		-	1	1	
01-011		2BS04100	5MVB862CH003	COVER FD		X	1	1	
01-012		2BS04090	5MVB862CH002	COVER REAR		X	1	1	
01-013		2BR04050	5MMW611LD003	SPRING COVER		-	1	1	
01-014		2BS04110	5MVB866CH022	COVER FRONT		X	1	1	
01-015		2BR04350	5MVS751SH001	PANEL ENGLISH	Excl. KMFR/KMIT	X	1	1	
01-015		2BR04400	5MVS751SH003	PANEL ITALIAN	KMIT only	X	-	1	
01-015		2BR24010	5MVS751SH002	PANEL FRENCH	KMFR only	X	-	1	
01-A03		2BR04040	5AAVC0VER249	COVER RIGHT ASSY		X	1	1	
01-A04		2FP68570		KEY BOARD ASSY		X	1	1	
01-016	+	2FP04010		BUTTON PANEL		-	1	1	
01-A05		2BR04020	5AAVC0VER246	COVER LEFT ASSY		X	1	1	
01-017	+	2BS04120	5MVB873CH004	COVER SIDE					

2. Upper Frame Unit (02-)

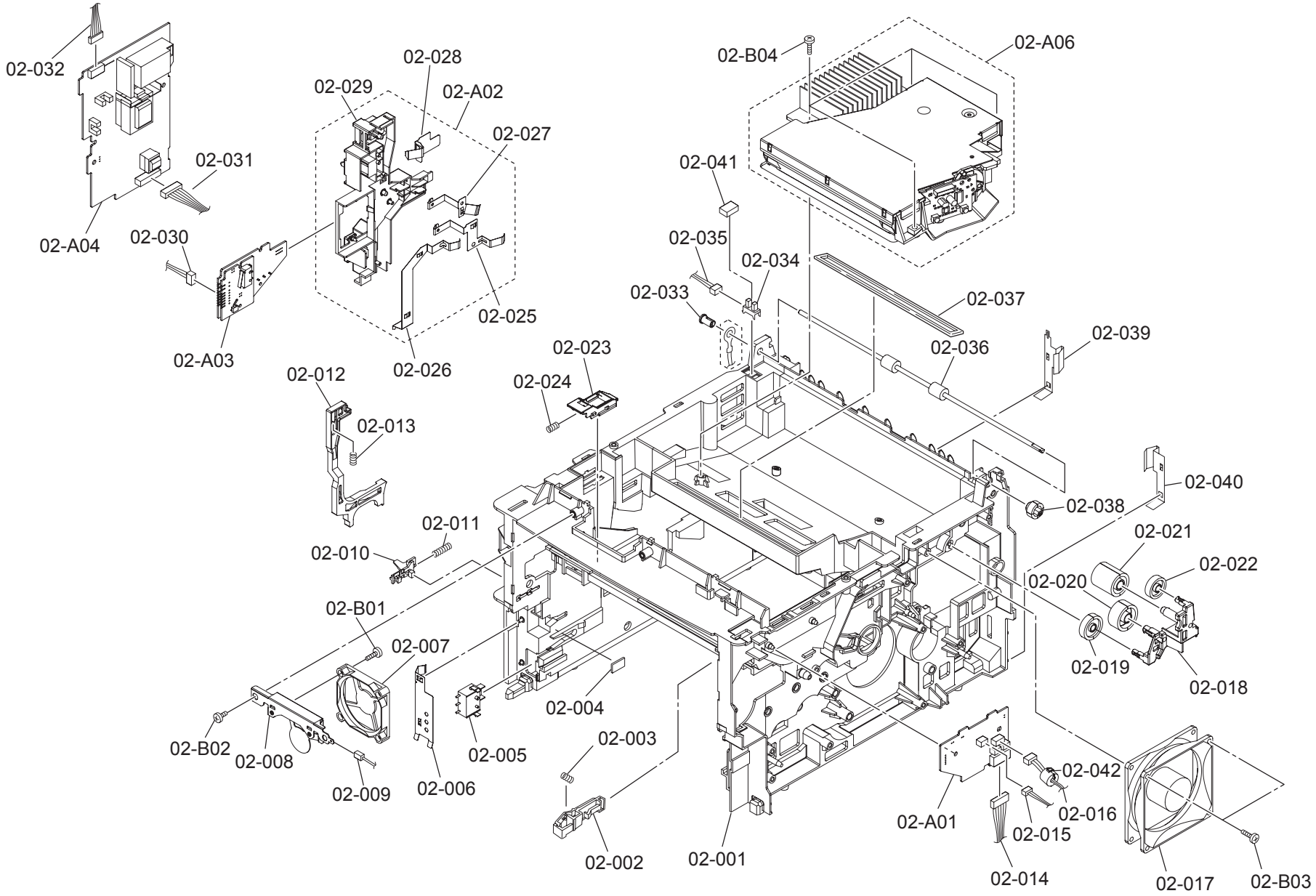

List 2 - Upper Frame Unit (02-)

Ref. No.		Part Code	Alternative	Description	Applicable Model	SP	120V	230V	Remarks
02-A01		2FP01160		P. W. BOARD ASSY ENGRLY KP-1071		X	1	1	
02-001		2FP02030		FRAME BASE		-	1	1	
02-002		2BS02390	5MVX522DB006	LOCK COVER M/P		X	1	1	
02-003		2BR02340	5MMW261LD051	SP LOCK COVER M/P		-	1	1	
02-004		2BR27010	5MVS216SF001	SPACER BASE		-	1	1	
02-005		SP0A0360		PUSH SWITCH 03 SN		X	1	1	
02-006		2BS02180	5MMX631LD004	PLATE EARTH HV		-	1	1	
02-007		WNAA1150		FAN MOTOR		X	1	1	
02-008		2FP02040		BKT FAN		-	1	1	
02-009		2FP26230		CONN. CORD ASSY		-	1	1	
02-010		2BS02350	5MVX322DB023	LEVER EF		X	1	1	
02-011		2BR02280	5MMW222LD002	SPRING LEVER EF		-	1	1	
02-012		2B102330	5MVX762SB018	ROD INTER LOCK	FS-1920	-	1	1	
02-012		2BS02450	5MVX762SB013	ROD INTER LOCK	FS-3820N/3830N	-	1	1	
02-013		2BR02550	5MMW451LD002	SPRING INTER LOCK	FS-1920	-	1	1	
02-013		2B700570	5MMW451LD001	SPRING INTER LOCK	FS-3820N/3830N	-	1	1	
02-014		2FP26080		CONN. CORD ASSY		-	1	1	
02-015		2FP26250		CONN. CORD ASSY		-	1	1	
02-016		2FP26280		CONN. CORD ASSY		-	1	1	
02-017		WNAA1160		FAN MOTOR	FS-1920N/3820N	X	1	1	
02-017		WNAA1140		FAN MOTOR	FS-3830N	X	1	1	
02-018		2BD02450	5MVX655SB001	BRACKET FD GEAR A	FS-1920N/3820N	X	1	1	
02-018		2BS02430	5MVX655SB002	BRACKET FD GEAR B	FS-3830N	X	1	1	
02-019		2BD02270	5MVG138DN048	GEAR FD Z29	FS-1920N/3820N	X	1	1	
02-019		2BS02250	5MVG137DN038	GEAR FD Z23	FS-3830N	X	1	1	
02-020		2BS02270	5MVG138DN049	GEAR FD Z33		X	1	1	
02-021		2BS02260	5MVG138DN047	GEAR FD Z28		X	1	1	
02-022		2BS02240	5MVG137DN014	GEAR IDLE Z25		X	1	1	
02-023		2BS02420	5MVX632DH001	LEVER LOCK DLP		-	1	1	
02-024		2BR02190	5MMW261LX005	SPRING LOCK DLP		-	1	1	
02-A02		2BR04030	5AAVC0VER247	COVER HV SUB ASSY		X	1	1	
02-025	+	2BS02190	5MMX631LD005	PLATE CONTACT TC		-	1	1	
02-026	+	2BS02200	5MMX662LD006	PLATE CONTACT EARTH		-	1	1	
02-027	+	2BS02170	5MMX543LD005	PLATE CONTACT BIAS		-	1	1	
02-028	+	2BS02160	5MMX521LD006	PLATE CONTACT MCH		-	1	1	
02-029	+	2BS02460	5MVX773SB007	COVER HV		-	1	1	
02-030		2D926160		CONN. CORD ASSY		-	1	1	
02-031		2FP26130		CONN. CORD ASSY		-	1	1	
02-032		2FP26070		CONN. CORD ASSY		-	1	1	

Ref. No.	Part Code	Alternative	Description	Applicable Model	SP	120V	230V	Remarks
02-033	2BS02290	5MVM266DN006	BUSH FD		X	1	1	
02-034	2DC27180		PT. SENSOR GP1A73AJ00		X	1	1	
02-035	2FP26180		CONN. CORD ASSY		-	1	1	
02-036	2BR02160	5MMT874SN008	ROLLER FD		X	1	1	
02-037	2BS02310	5MVS727RF006	SEAL BASE B		-	1	1	
02-038	2BS02220	5MVG127DN076	GEAR ROLL FD Z18		X	1	1	
02-039	2BR02220	5MMX431LD015	PLATE EARTH SO L		-	1	1	
02-040	2BR02560	5MMX431LD016	PLATE EARTH SO R	FS-1920N/3820N	-	1	1	
02-041	2FP02050		SPACER SENSOR FD		-	1	1	
02-042	M21C0010		FERRITE CORE		-	1	1	
02-A03	2FP01230		P. W. BOARD ASSY SENSOR KP-1077		X	1	1	
02-A04	2FP28290		TRANS ASSY		X	1	1	
02-A06	2FP93030		LK-67 SCANNER UNIT	FS-1920N/3820N	X	1	1	
02-A06	2FR93020		LK-68 SCANNER UNIT	FS-3830N	X	1	1	

3. Drive Unit (03-)

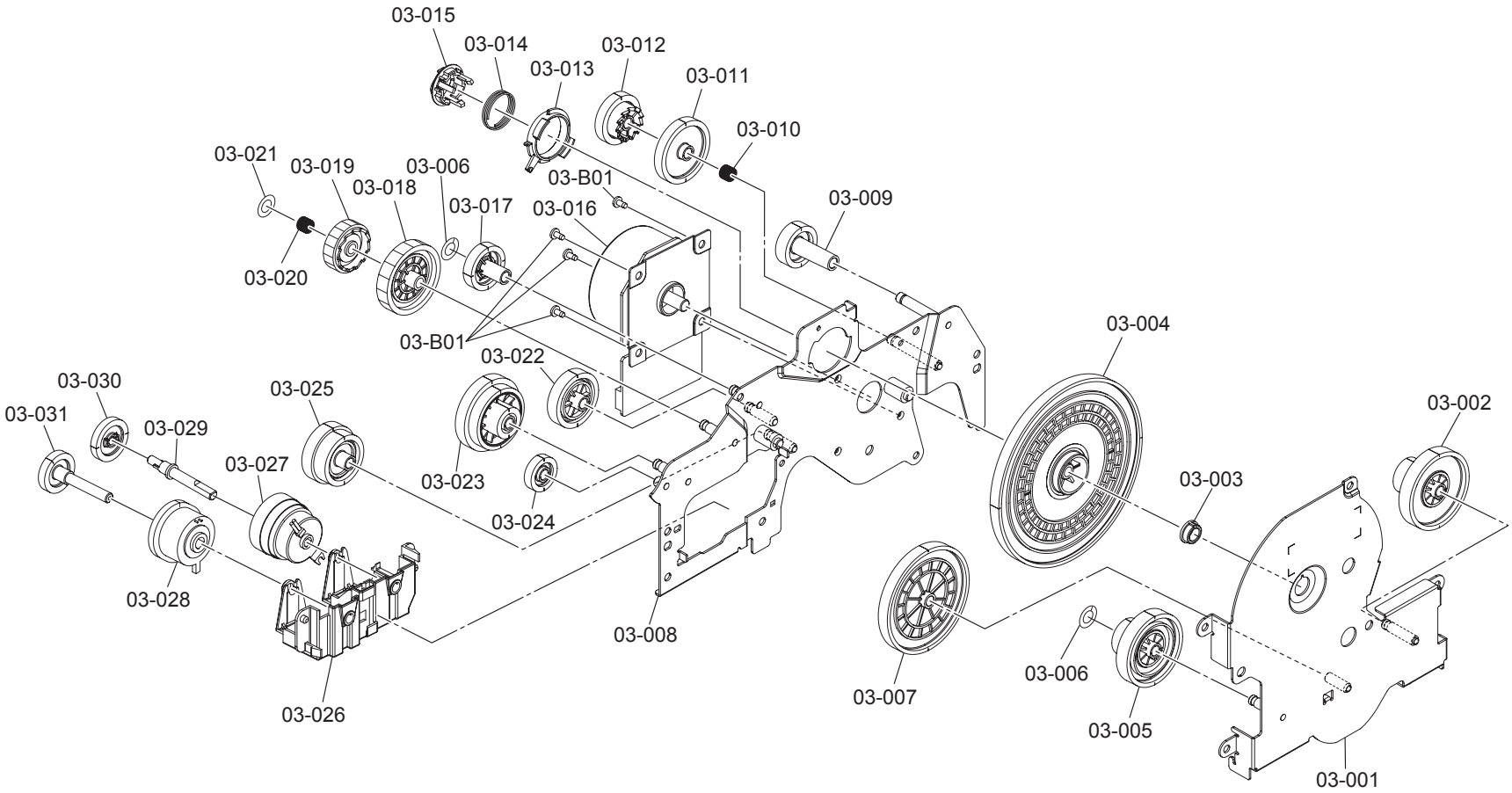

List 3 - Drive Unit (03-)

Ref. No.		Part Code	Alternative	Description	Applicable Model	SP	120V	230V	Remarks
		2FP93040		DR-67 DRIVE UNIT	FS-1920/3820N	X	1	1	
		2FR93030		DR-68 DRIVE UNIT	FS-3830N	X	1	1	
03-001	+	2FP22130		PLATE DRIVE B		-	1	1	
03-002	+	2FP22050		GEAR Z88H-Z24H		X	1	1	
03-003	+	2BM17940	5MMM176CJ003	METAL BUSH KD		X	1	1	
03-004	+	2FP22020		GEAR Z214H		X	1	1	
03-005	+	2FP22040		GEAR Z82H-Z25H		X	1	1	
03-006	+	C2891080		POLY CUT WASHER		X	2	2	
03-007	+	2FP22030		GEAR Z123H		X	1	1	
03-008	+	2FP22120		PLATE DRIVE A		-	1	1	
03-009	+	2BS22140	5MVG138BN001	GEAR Z30S		X	1	1	
03-010	+	2BR22160	5MMW261LD041	SPRING FREE DR		-	1	1	
03-011	+	2FP22170		GEAR Z45H		X	1	1	
03-012	+	2BS22160	5MVG148DN057	GEAR FREE Z36S		X	1	1	
03-013	+	2FP22090		BUSH DRIVE		X	1	1	
03-014	+	2FP22210		SPRING JOINT DRIVE		-	1	1	
03-015	+	2FP22160		JOINT DRIVE		X	1	1	
03-016	+	2FP27170		MOTOR MAIN	FS-1920/3820N	X	1	1	
03-016	+	2FR27020		MOTOR MAIN	FS-3830N	X	1	1	
03-017	+	2FP22080		GEAR Z31H		X	1	1	
03-018	+	2FP22180		GEAR Z50H		X	1	1	
03-019	+	2BS22190	5MVG148DN087	GEAR FREE Z34H		X	1	1	
03-020	+	2BS22050	5MMW371LD005	SPRING REVERSE DR		X	1	1	
03-021	+	2BR20530	5MBWL52D55NN	POLY CUT WASHER		X	1	1	
03-022	+	2FP22070		GEAR Z39H		X	1	1	
03-023	+	2BS22250	5MVG169DN036	GEAR Z54S-Z44H-Z22S		X	1	1	
03-024	+	2BS22130	5MVG137DN033	GEAR Z23S		X	1	1	
03-025	+	2FP22060		GEAR Z44S-Z36H		X	1	1	
03-026	+	2FP22010		HOLDER CLUTCH		X	1	1	
03-027	+	2FP27130		CLUTCH REGIST		X	1	1	
03-028	+	2FP22190		CLUTCH FEED		X	1	1	
03-029	+	2FP02010		SHAFT CLUTCH		X	1	1	
03-030	+	2BS22150	5MVG138DN044	GEAR CL R Z22S		X	1	1	
03-031	+	2BS22120	5MVG038XN001	GEAR CL F Z21S		X	1	1	

4. Controller Box (04-)

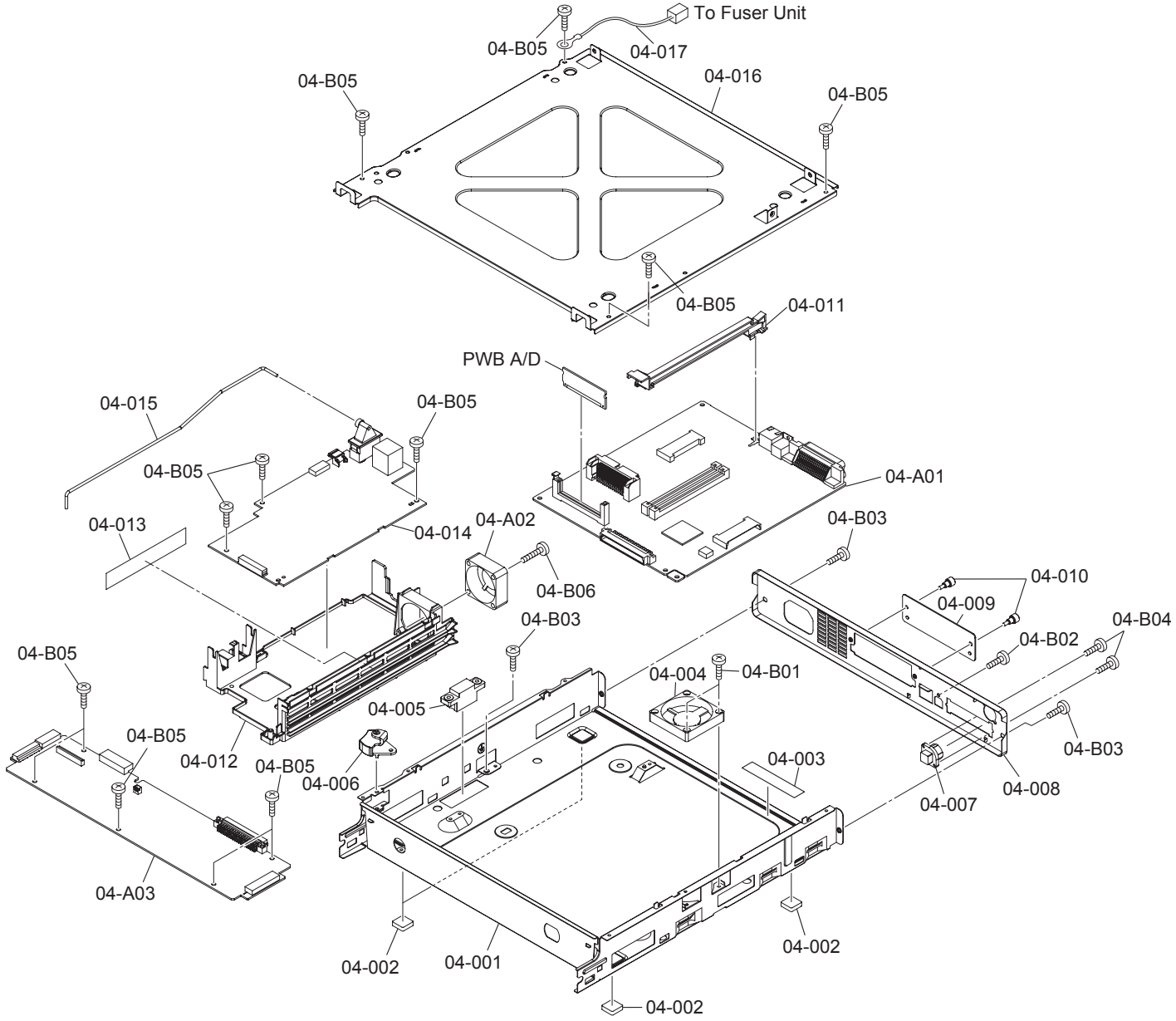

List 4 - Controller Box (04-)

Ref. No.	Part Code	Alternative	Description		Applicable Model	SP	120V	230V	Remarks
04-001	2FP03010		BOX CONTROLLER			-	1	1	
04-002	2BS03110	5MVX221RB014	FOOT			X	4	4	
04-003	2BS03090	5MVS622KF008	SHEET CONTROLLER			-	1	1	
04-004	WNAA1130		FAN MOTOR		FS-3820N/3830N	X	1	1	
04-005	2FP26240		CONN. CORD ASSY			X	1	1	
04-006	2BS03120	5MVX433SH002	LEVER SW			X	1	1	
04-007	2FP26210		CONN. CORD ASSY			-	1	1	
04-008	2B103040	5MMB851SD007	PANEL REAR			-	1	1	
04-008	2FR03010		PANEL REAR			-	1	1	
04-009	3BH26020	5MMS636SD009	PLATE OPTION			-	1	1	
04-010	2D903100		SCREW OP			X	2	2	
04-011	2D903070	5MVX733SL001	RAIL OPTION			-	1	1	
04-012	2BS03140	5MVX875SB005	COVER PWB POWER			-	1	1	
04-013	2FP03020		SHEET COVER PWB			-	1	1	
04-014	2FP28310		SWITCHING REGULATOR		FS-1920	X	-	1	
04-014	2FP28300		SWITCHING REGULATOR		FS-1920	X	1	-	
04-014	2FR28060		SWITCHING REGULATOR		FS-3820N/3830N	X	-	1	
04-014	2FR28050		SWITCHING REGULATOR		FS-3820N/3830N	X	1	-	
04-015	2BS03070	5MMX833LD001	ROD SW POWER			-	1	1	
04-016	2BR03030	5MMB881SD001	LID CONTROLLER			-	1	1	
04-017	2FP26270		CONN. CORD ASSY			-	1	1	
04-A01	2FP01370		P. W. BOARD ASSY	MAIN KP-1053	FS-1920	X	1	1	
04-A01	2FR01010		P. W. BOARD ASSY	MAIN KP-1033	FS-3830N	X	1	1	
04-A01	2FK01040		P. W. BOARD ASSY	MAIN KP-1033	FS-3820N	X	1	1	
04-A02	WNAA1120		FAN MOTOR		FS-1920	X	1	1	
04-A02	WNAA1100		FAN MOTOR		FS-3820N/3830N	X	1	1	
04-A03	2FP01320		P. W. BOARD ASSY	ENGINE KP-1081	FS-1920 Incl. KMTW, Excl. Philipines	X	-	1	
04-A03	2FP01340		P. W. BOARD ASSY	ENGINE KP-1081	FS-1920 Excl. KMTW, Incl. Philippines	X	1	-	
04-A03	2FP01250		P. W. BOARD ASSY	ENGINE KP-1081	FS-3830N Incl. KMTW, Excl. Philipines	X	-	1	
04-A03	2FP01270		P. W. BOARD ASSY	ENGINE KP-1081	FS-3830N Excl. KMTW, Incl. Philippines	X	1	-	
04-A03	2FY01010		P. W. BOARD ASSY	ENGINE KP-1081	FS-3820N Incl. KMTW,Excl. Philipines	X	-	1	
04-A03	2FY01030		P. W. BOARD ASSY	ENGINE KP-1081	FS-3820N Excl. KMTW,Incl. Philippines	X	1	-	
PWB-A/D	2FP01200		P. W. BOARD ASSY	DIMM KP-1059	FS-1920	X	1	1	
PWB-A/D	2FR01030		P. W. BOARD ASSY	DIMM KP-893	FS-3820N/3830N	X	1	1	

5. Paper Feed Unit (05-)

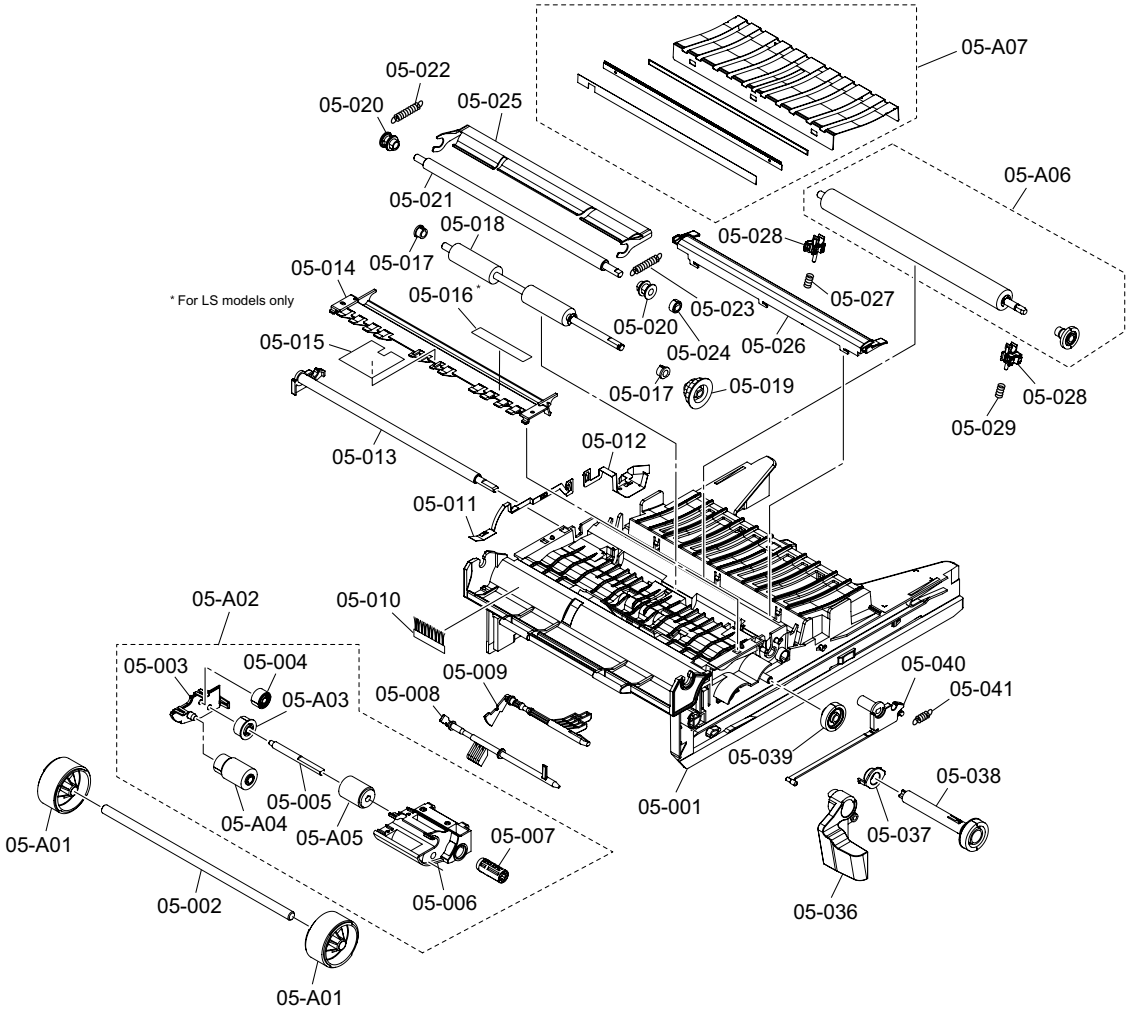

List 5 - Paper Feed Unit (05-)

Ref. No.		Part Code	Alternative	Description	Applicable Model	SP	120V	230V	Remarks
		2FP93050		FE-67 FEED TRANS UNIT		X	1	1	
05-A01	+	2CL16110	5AAVR0LL+049	ROLLER GUIDE ASSY		X	2	2	
05-001	+	S9000240	5MVB886SB010	BASE FEED		-	1	1	
05-002	+	2BR16200	5MMT860SN002	SHAFT ROLL GUIDE		-	1	1	
05-A02	+	2BR68470	5AAYA37E++35	HOLDER FEED ASSY		X	1	1	
05-A03	++	2FP16010		GEAR PICK ASSY		X	1	1	
05-A04	++	2FP16050		ROLLER FEED ASSY		X	1	1	
05-A05	++	2CL16100	5AAVR0LL+048	ROLLER PICKUP ASSY		X	1	1	
05-003	++	2BS16400	5MVX642DH001	COVER BKT FEED		-	1	1	
05-004	++	2FP16020		GEAR Z27H		X	1	1	
05-005	++	2BR16370	5MMT664SN002	SHAFT PICKUP		-	1	1	
05-006	++	2BS16420	5MVX664SH004	BRACKET FEED		-	1	1	
05-007	++	2BS16390	5MVX376DN001	HOLDER RELEASE		X	1	1	
05-008	+	2BS16410	5MVX663SB013	ACTUATOR PAPER		X	1	1	
05-009	+	2BS16450	5MVX742SB008	SENSOR DOC		X	1	1	
05-010	+	2BP21010	5MVS711XF003	DISCHARGER FD		-	1	1	
05-011	+	2BS16190	5MMX742LD002	PLATE EARTH MP		-	1	1	
05-012	+	2BS16180	5MMX633LD001	PLATE EARTH TC		-	1	1	
05-013	+	2BS16470	5MVX843CB004	SHAFT RELEASE		-	1	1	
05-014	+	2BS16480	5MVX862SB005	GUIDE PAPER		-	1	1	
05-015	+	2FP20170		SHEET GUIDE FLAPPER		-	1	1	
05-017	+	2B716270	5MVM176DN019	BUSH POM A		X	2	2	
05-018	+	2BR16220	5MMT876SN076	ROLLER REGIST LOW		X	1	1	
05-019	+	2BS16270	5MVG148DN060	GEAR REG Z22S-Z32S		X	1	1	
05-020	+	2BS16290	5MVM221DB002	BUSH REGIST		X	2	2	
05-021	+	2BR16210	5MMT866SN032	ROLLER REGIST UP		-	1	1	
05-022	+	2BR16230	5MMW341LD007	SPRING REGIST L		X	1	1	
05-023	+	2BR16240	5MMW341LD008	SPRING REGIST R		X	1	1	
05-024	+	2BS16240	5MVG126DN015	GEAR REGIST Z19S		X	1	1	
05-025	+	2BS16200	5MMX852LD003	PLATE GUIDE CHUTE		-	1	1	
05-026	+	2BS16460	5MVX832BB001	PAPER CHUTE		X	1	1	
05-027	+	2B716140	5MMW241SX004	SPRING TRANS L		X	1	1	
05-028	+	2BS16380	5MVX322DB019	BUSH TRANSFER		X	2	2	
05-029	+	2BR16280	5MMW241LX004	SPRING TRANS R		X	1	1	
05-036	+	2BS16430	5MVX666SH005	LEVER LOCK		X	1	1	
05-037	+	2BS16300	5MVM222XN001	BUSH FEED		X	1	1	
05-038	+	2D916230	5MVG038DN002	GEAR JOINT Z26S		X	1	1	
05-039	+	2BS16260	5MVG138DN045	GEAR IDLE Z23S		X	1	1	
05-040	+	2BS16440	5MVX733DN001	SHAFT LOCK R		-	1	1	

Ref. No.		Part Code	Alternative	Description	Applicable Model	SP	120V	230V	Remarks
05-041	+	2BR16250	5MMW251SD002	SPRING LOCK R		-	1	1	
05-A06	+	2BS68320	5AAYA38E++27	ROLLER TRANSFER ASSY		X	1	1	
05-A07	+	2BR68480	5AAYA37E++36	DISCHARGER ASSY		-	1	1	

6. Fuser Unit (06-)

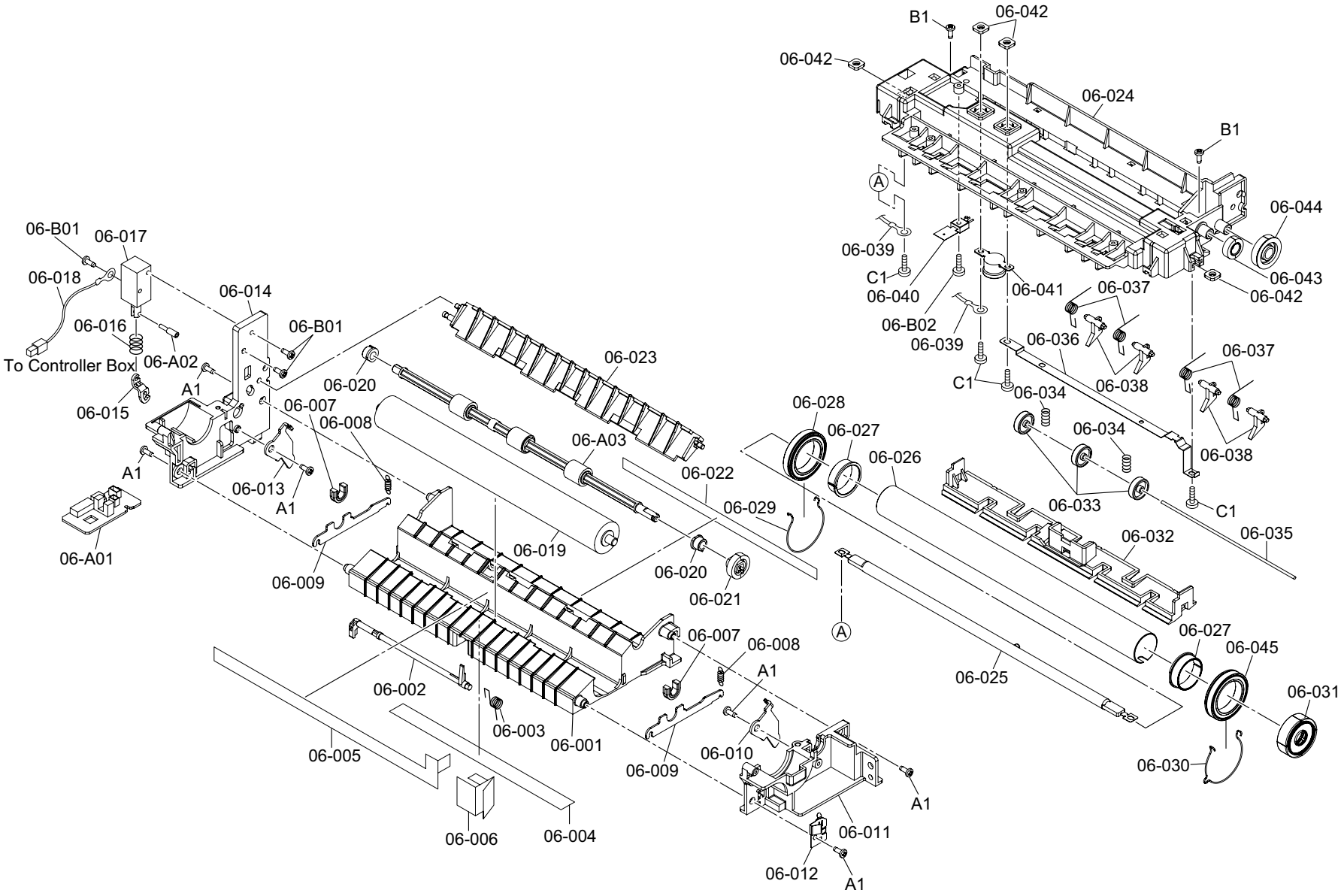

List 6 - Fuser Unit (06-)

Ref. No.		Part Code	Alternative	Description	Applicable Model	SP	120V	230V	Remarks
		2FP93060		FK-67(E) FUSER UNIT	FS-1920/3820N, Excl. KMSG/KMTH/KMHG/Philippines	X	-	1	
		2FP93070		FK-67(U) FUSER UNIT	FS-1920/3820N, Excl. KMTW	X	1	-	
		2FP93130		FK-67(ASIA)E FUSER UNIT	FS-1920/3820N, KMSG/KMTH/KMHG/Philippines	X	-	1	
		2FP93140		FK-67(ASIA)U FUSER UNIT	FS-1920/3820N, KMTW only	X	1	-	
		2FR93040		FK-68(E) FUSER UNIT	FS-3830N, Excl. KMSG/KMTH/KMHG/Philippines	X	-	1	
		2FR93050		FK-68(U) FUSER UNIT	FS-3830N, Excl. KMTW	X	1	-	
		2FR93110		FK-68(ASIA)E FUSER UNIT	FS-3830N, KMSG/KMTH/KMHG/Philippines	X	-	1	
		2FR93120		FK-68(ASIA)U FUSER UNIT	FS-3830N, KMTW only	X	1	-	
06-001	+	2BR20050	5MVX874KB002	FRAME FUSER LOW		-	1	1	
06-002	+	2BR20110	5MVX731CB003	ACTUATOR FUSER		X	1	1	
06-003	+	2A820520	5MMW261LD017	SPRING ACTUATOR		-	1	1	
06-004	+	2FP20190		SHEET FUSER LOW		-	1	1	
06-005	+	2FP20200		SHEET DISCHRGER	Excl. KMTW/KMSG/KMTH/KMHG/Philippines	-	1	1	
06-006	+	2FP20180		SHEET EARTH PRESS	Excl. KMTW/KMSG/KMTH/KMHG/Philippines	-	1	1	
06-007	+	2BS20230	5MVM188XN014	BUSH PRESS		X	2	2	
06-008	+	2FP20130		SPRING PRESS		-	2	2	
06-009	+	2BR20290	5MMS621SL001	PLATE PRESS		-	2	2	
06-010	+	2BR20280	5MMX431SL002	PLATE RELEASE R		-	1	1	
06-011	+	2FP20020		FRAME FUSER R	FS-1920/3820N	-	1	1	
06-011	+	2FR20020		FRAME FUSER R	FS-3830N	-	1	1	
06-012	+	2FP20070		PLATE EARTH FU		-	1	1	
06-013	+	2BR20270	5MMX431SL001	PLATE RELEASE L		-	1	1	
06-014	+	2FP20030		FRAME FUSER L	FS-1920/3820N	-	1	1	
06-014	+	2FR20030		FRAME FUSER L	FS-3830N	-	1	1	
06-015	+	2BR20160	5MVX311DB009	ACTUATOR SOL		-	1	1	
06-016	+	2BM21060	5MMW261LJ032	SPRING SOL		-	1	1	
06-017	+	2BR21050	5EZSA2401020307	SOLENOID TDS-KN07A		X	1	1	
06-018	+	2FP26260		CONN. CORD ASSY		-	1	1	
06-019	+	2FP20100		ROLLER PRESS	Excl. KMTW/KMSG/KMTH/KMHG/Philippines	X	1	1	
06-019	+		5MMT886SN028	ROLLER PRESS	KMTW/KMSG/KMTH/KMHG/Philippines	X	1	1	
06-020	+	2B716270	5MVM176DN019	BUSH POM A		X	2	2	
06-021	+	2BR20140	5MVG137DN034	GEAR EXIT Z21		X	1	1	
06-022	+	2A805020	5MVVL731WN14	LABEL FUSER CAUTION		-	1	1	
06-023	+	2BR20100	5MVX832SB012	GUIDE CHANGE		-	1	1	
06-024	+	2FP20010		FRAME FUSER UP	FS-1920/3820N	-	1	1	
06-024	+	2FR20010		FRAME FUSER UP	FS-3830N	-	1	1	
06-025	+	WPAAA570		HEATER LAMP		X	-	1	
06-025	+	WPAAA580		HEATER LAMP		X	1	-	
06-026	+	2FP20110		ROLLER HEAT	FS-1920/3820N, Excl. KMTW/KMSG/KMTH/KMHG/Philippines	X	1	1	

Ref. No.		Part Code	Alternative	Description	Applicable Model	SP	120V	230V	Remarks
06-026	+	2FP20120		ROLLER HEAT	FS-1920/3820N, KMTW/KMSG/KMTH/KMHG/Philippines	X	1	1	
06-026	+	2FR20080		ROLLER HEAT	FS-3830N, Excl. KMTW/KMSG/KMTH/KMHG/Philippines	X	1	1	
06-026	+	2FR20090		ROLLER HEAT	FS-3830N, KMTW/KMSG/KMTH/KMHG/Philippines	X	1	1	
06-027	+	2FP20080		BUSH FUSER	FS-1920/3820N	X	2	2	
06-027	+	2FR20070		BUSH FUSER	FS-3830N	X	2	2	
06-028	+	2FP20160		BEARING HEAT	FS-1920/3820N	X	1	1	
06-028	+	G3268060		BEARING HEAT	FS-3830N	X	1	1	
06-029	+	2FP20140		SPRING EARTH FUSER L	FS-1920/3820N	X	1	1	
06-029	+	2FR20100		SPRING EARTH FUSER L	FS-3830N	X	1	1	
06-030	+	2FP20150		SPRING EARTH FUSER R	FS-1920/3820N	X	1	1	
06-030	+	2FR20110		SPRING EARTH FUSER R	FS-3830N	X	1	1	
06-031	+	2FP20050		GEAR HEAT Z36	FS-1920/3820N	X	1	1	
06-031	+	2FR20040		GEAR HEAT Z46	FS-3830N	X	1	1	
06-032	+	2BR20080	5MVX833KB002	GUIDE EXIT UP	FS-1920/3820N	-	1	1	
06-032	+	2BS20080	5MVX833KB003	GUIDE EXIT UP	FS-3830N	-	1	1	
06-033	+	2BR20520	5MVM176DB018	PULLEY EXIT		X	3	3	
06-034	+	2BR20330	5MMW261LD033	SPRING PULLEY A		-	2	2	
06-035	+	2BR20370	5MMT722SZ001	SHAFT EXIT		-	1	1	
06-036	+	2FP20060		PLATE CORD	FS-1920/3820N	-	1	1	
06-036	+	2FR20050		PLATE CORD	FS-3830N	-	1	1	
06-037	+	2BR16440	5MMW261LD058	SPRING SEPARATOR		-	4	4	
06-038	+	2A820530	5MVX222XN002	SEPARATOR		X	4	4	
06-039	+	2FP26040		CONN. CORD ASSY		-	-	1	
06-039	+	2FP26050		CONN. CORD ASSY		-	1	-	
06-040	+	2BR21010	5AAXTM015GEA	THERMISTOR ASSY		X	1	1	
06-041	+	2BM21680		THERMOSTAT 250V170C		X	1	1	
06-042	+	2BY20050	5MMS111SL002	NUT FUSER A		-	4	4	
06-043	+	2BR20120	5MVG138DN037	GEAR IDLE Z28	FS-1920/3820N	X	1	1	
06-043	+	2BS20130	5MVG137XN001	GEAR JOINT Z21	FS-3830N	X	1	1	
06-044	+	2BR20150	5MVG127DN047	GEAR IDLE Z18	FS-1920/3820N	X	1	1	
06-044	+	2BR20120	5MVG138DN037	GEAR IDLE Z28	FS-3830N	X	1	1	
06-045	+	2FP20160		BEARING HEAT	FS-1920/3820N	X	1	1	
06-045	+	2FR20120		BEARING HEAT	FS-3830N	X	1	1	
06-A01	+	2FP01180		P. W. BOARD ASSY FUSER		X	1	1	
06-A02	+	2BR20380	5AAVSHAFT001	PIN ASSY		-	1	1	
06-A03	+	2CL16080	5AAVR0LL+046	ROLLER EXIT ASSY		X	1	1	

7. Drum Unit (07-)

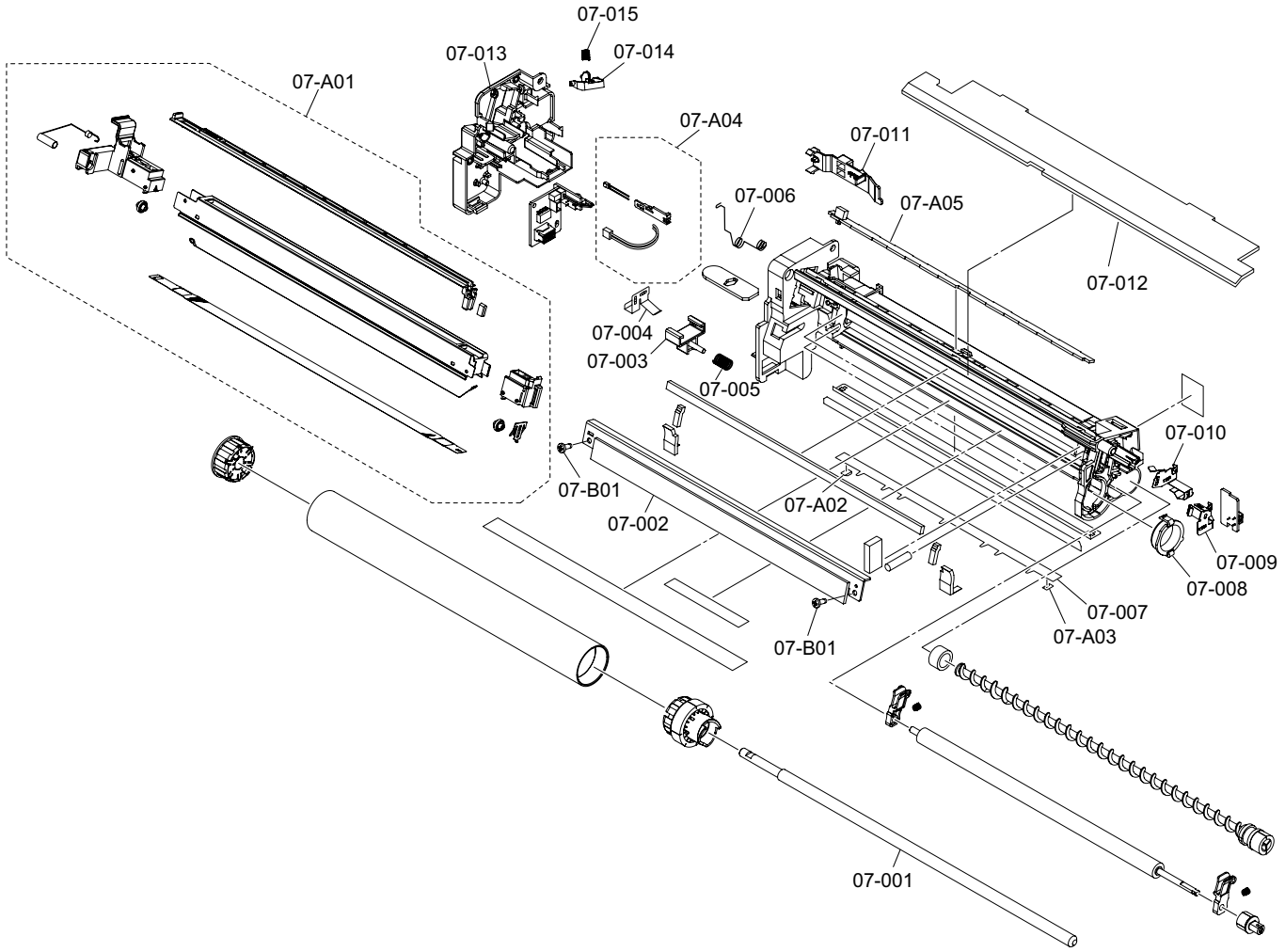

List 7 - Drum Unit (07-)

Ref. No.		Part Code	Alternative	Description	Applicable Model	SP	120V	230V	Remarks
		2FP93010		DK-67 DRUM UNIT	FS-1920/3820N	X	1	1	
		2FR03010		DK-68 DRUM UNIT	FS-3830N	X	1	1	
07-001	+	2FP08010		SHAFT DRUM		-	1	1	
07-002	+	2FP08040		BLADE ASSY		X	1	1	
07-003	+	2BS08510	5MVX332DB020	SHUTTER WASTE		-	1	1	
07-004	+	2BS08220	5MMX432LD007	PLATE EARTH LEFT		-	1	1	
07-005	+	2BR08120	5MMW361LD017	SPRING SHUTTER		-	1	1	
07-006	+	2BR08370	5MMW161LD053	SP EARTH DRUM		-	1	1	
07-007	+	2B981120	5MVS821KN022	SHEET GUIDE DRUM		X	1	1	
07-008	+	2BS08290	5MVM288XN002	BUSH DRUM RIGHT		X	1	1	
07-009	+	2BR08050	5MMX332LD011	PLATE ZENNER		-	1	1	
07-010	+	2BR08060	5MMX332LD012	PLATE EARTH ZENNER		-	1	1	
07-011	+	2BS08530	5MVX622DH001	LOCK DRUM		-	1	1	
07-012	+	2BR08510	5MVX843SB006	COVER DRUM TOP		-	1	1	
07-013	+	2BS08240	5MVB662CB002	COVER DRUM LEFT		-	1	1	
07-014	+	2BS08490	5MVX322DN004	LOCK MCH		-	1	1	
07-015	+	2BR08110	5MMW141LD019	SPRING LOCK		-	1	1	
07-A01	+	2BR93410	5PLPXZ1APKX	MC-60 MCH ASSY		X	1	1	
07-A02	+	2BR69260	5AAYA91J++16	PLATE SEPA R ASSY		X	1	1	
07-A03	+	2BR69250	5AAYA91J++15	SHEET SEPARATOR ASSY		X	1	1	
07-A04	+	2FP69000		LED ASSY		X	1	1	
07-A05	+	2FP01140		P. W. BOARD ASSY ERASER		X	1	1	

8. Developer Unit

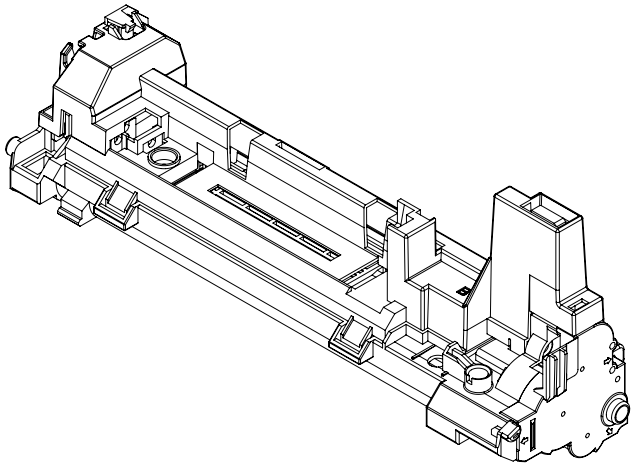

List 8 - Developer Unit

Ref. No.	Part Code	Description	SP	120V	230V	Remarks
	2FP93020	DV-67 DEVELOPER UNIT	X	1	1	

9. Frame MP Assembly (11-)

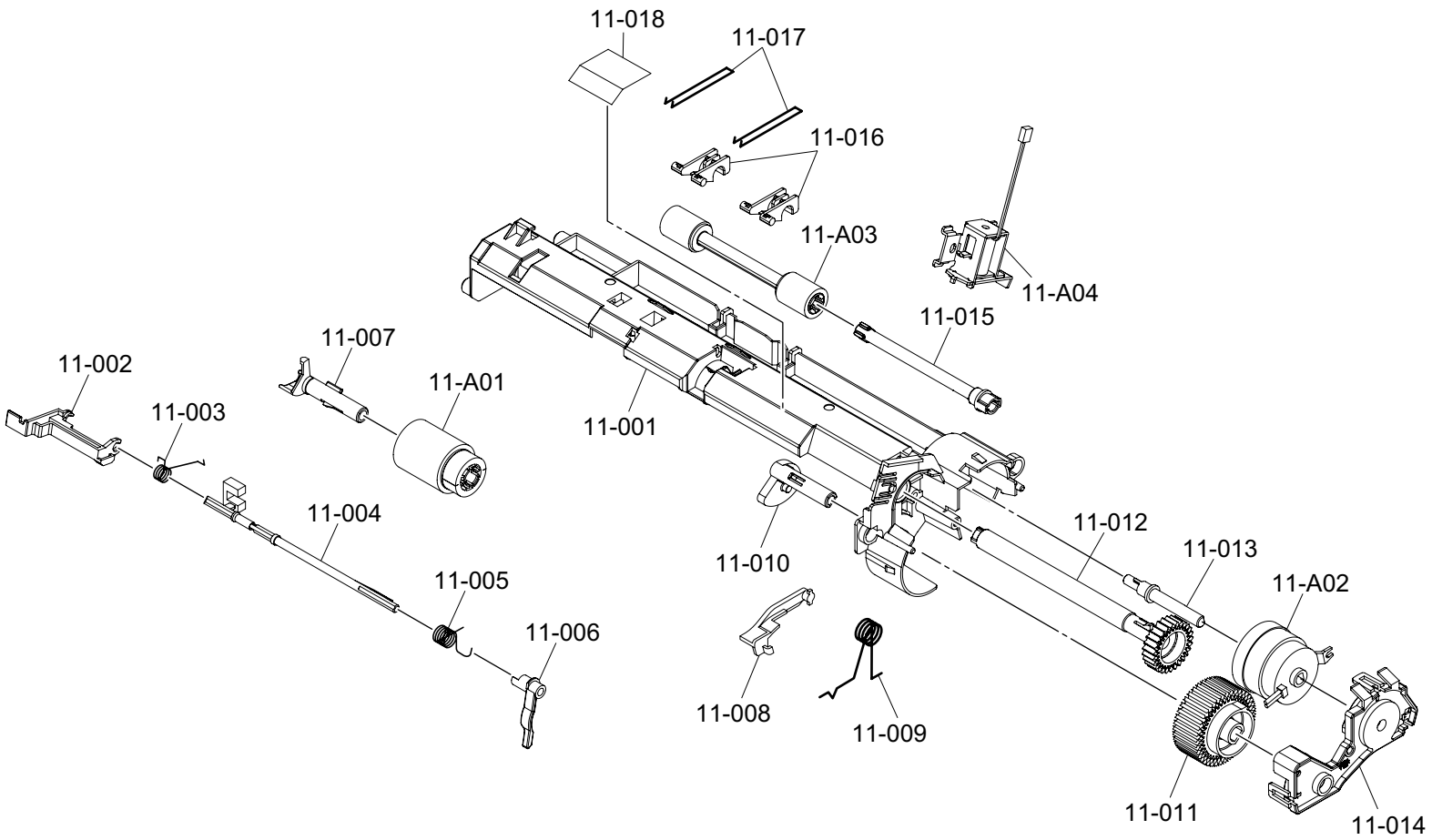

List 9 - Frame MP Assembly (11-)

Ref. No.		Part Code	Alternative	Description	Applicable Model	SP	120V	230V	Remarks
		2FP68190		FRAME M/P ASSY		X	1	1	
11-001	+	2BS02470	5MVX866CH001	FRAME M/P		-	1	1	
11-002	+	2BS02410	5MVX621SB010	ACTUATOR M/P B		-	1	1	
11-003	+	2BR02520	5MMW161SD010	SP ACTUATOR M/P B		-	1	1	
11-004	+	2BS02330	5MVT754SB001	ACTUATOR M/P A		-	1	1	
11-005	+	2BR02530	5MMW161SD009	SP ACTUATOR M/P C		-	1	1	
11-006	+	2BS02360	5MVX421SB021	ACTUATOR M/P C		X	1	1	
11-007	+	2BS02370	5MVX422DN007	HOLDER FEED M/P		X	1	1	
11-008	+	2BS02400	5MVX522DN004	LEVER CAM		X	1	1	
11-009	+	2BR02450	5MMW161LD043	SPRING CAM M/P		-	1	1	
11-010	+	2BS02380	5MVX433DN002	CAM M/P		X	1	1	
11-011	+	2BS02280	5MVG148DN063	GEAR M/P Z40		X	1	1	
11-012	+	2BS02230	5MVG133DN008	GEAR M/P Z27		X	1	1	
11-013	+	2FP02010		SHAFT CLUTCH		-	1	1	
11-014	+	2FP02020		HOLDER CLUTCH M/P		-	1	1	
11-015	+	2BS02320	5MVT676CB003	SHAFT MID B		-	1	1	
11-016	+	2BS02340	5MVX321DN014	BUSH MID M/P		X	2	2	
11-017	+	2BR02440	5MMW601SD001	SPRING MID M/P		-	2	2	
11-018	+	2FP06020		LABEL M/P		-	1	1	
11-A01	+	2CL16130	5AAVR0LL+051	ROLLER M/P ASSY		X	1	1	
11-A02	+	2FP27120		CLUTCH MID		X	1	1	
11-A03	+	2CL16120	5AAVR0LL+050	ROLL MID M/P ASSY		X	1	1	
11-A04	+	WSA00050	5EZSA2401310101	SOLENOID M/P ASSY		X	1	1	

10. Paper Cassette (13-)

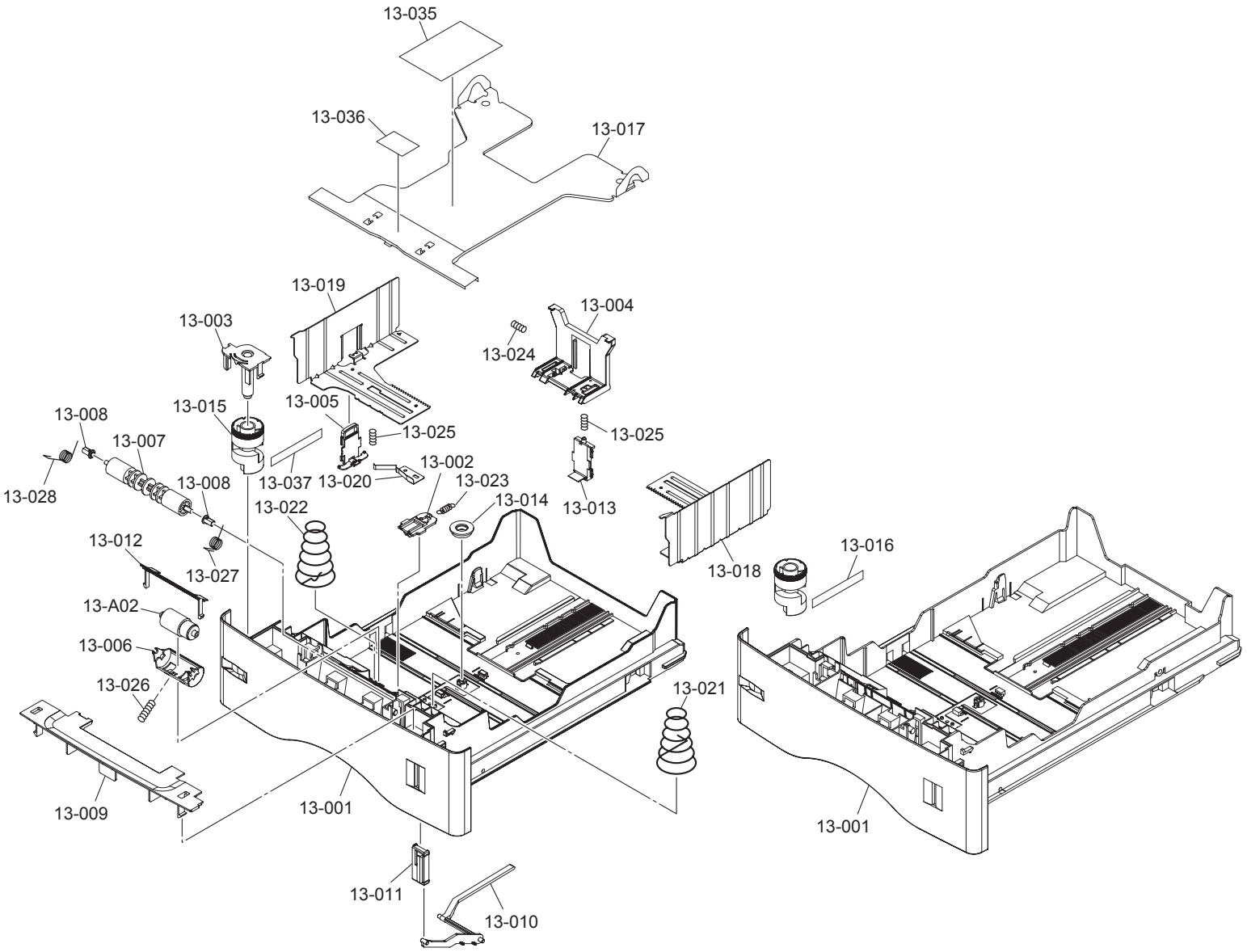

List 10 - Paper Cassette (13-)

Ref. No.		Part Code	Alternative	Description	Applicable Model	SP	120V	230V	Remarks
		2BR93320	5PLPXY8APKX	PC-60A4 CASSETTE ASSY	Excl. Philippines	X	-	1	
		2BR93400	5PLPXZ6APKX	PC-60LTR CASSETTE ASSY	Excl. KMTW	X	1	-	
		2BR93360	5PLPXZ7APKX	PC-60LG(A4) CASSETTE ASSY		X	-	1	
		2BR93390	5PLPXCUAPKX	PC-60LG(LTR) CASSETTE ASSY	Excl. KMTW	X	1	-	
		2BR93430	5PLPXDRAPKX	PC-60A4 CASSETTE ASSY	KMTW only	X	1	-	
		2BR93530	5PLPXQTA0KX	PC-60LTR CASSETTE ASSY	Philippines only	X	-	1	
		2BR93380	5PLPXDSAPKX	PC-60LG(A4) CASSETTE ASSY	KMTW/Philippines	X	1	1	
13-A02	+	2BR06520	5AAVR0LL+052	RETARD ROLL ASSY		X	1	1	
13-001	+	2BS06270	5MVB887SH027	BASE CASSETTE A4	PC-60	-	1	1	
13-001	+	3DD06010	5MVB987SH018	BASE CASSETTE LGL	PC-60LG	-	1	1	
13-002	+	2BS06450	5MVX432DN005	LOCK BOTTOM		X	1	1	
13-003	+	2BS06470	5MVX543DH002	HOLDER DIAL		-	1	1	
13-004	+	2BS06520	5MVX664DN001	END FENCE		-	1	1	
13-005	+	2BS06490	5MVX642DG001	LOCK LEVER SIDE		-	1	1	
13-006	+	2BS06510	5MVX644DN001	HOLDER RETARD		-	1	1	
13-007	+	2BS06410	5MVT774DN001	ROLLER FEED		X	1	1	
13-008	+	2BS06320	5MVM164DN007	BUSH4		X	2	2	
13-009	+	2BS06540	5MVX853SH003	COVER ROLLER		-	1	1	
13-010	+	2BS06530	5MVX764DN001	LEVER INDICATOR		X	1	1	
13-011	+	2BS06440	5MVX422SD002	INDICATER PAPER		-	1	1	
13-012	+	2BS06480	5MVX632SH005	GUIDE RETARD		-	1	1	
13-013	+	2BS06500	5MVX642DG002	LOCK LEVER END		-	1	1	
13-014	+	2B700190	5MVG127DB046	GEAR CASSETTE		-	1	1	
13-015	+	2B700210	5MVM586SH001	DIAL CASSETTE		-	1	1	
13-016	+	3DD06160	5MVVL171WN03	LABEL SIZE LGL	PC-60LG	-	1	1	
13-017	+	2BS06230	5MMX883SD004	PLATE BOTTOM		-	1	1	
13-018	+	2BS06050	5MML877SN001	PLATE SIDE R		-	1	1	
13-019	+	2BS06060	5MML877SN002	PLATE SIDE L		-	1	1	
13-020	+	2BS06220	5MMX653LD004	EARTH PLATE		-	1	1	
13-021	+	2BS06200	5MMW682LD004	SPRING BOTTOM	Excl. KMTW/Philippines	-	1	1	
13-021	+	2BR06380	5MMW682LD006	SPRING BOTTOM	KMTW/Philippines	-	1	1	
13-022	+	2BS06210	5MMW682LD005	SPRING BOTTOM EARTH	Excl. KMTW/Philippines	-	1	1	
13-022	+	2BR06390	5MMW682LD007	SPRING BOTTOM EARTH	KMTW/Philippines	-	1	1	
13-023	+	2BS06150	5MMW251LD048	SP STOPPER BOTTOM		-	1	1	
13-024	+	2BS06100	5MMW151SD003	SPRING END		-	1	1	
13-025	+	2B700070	5MMW166LD010	SPRING LOCK GUIDE		-	2	2	
13-026	+	2BS06090	5MMW151LD004	SPRING RETARD		-	1	1	
13-027	+	2BM22440	5MMW161LD044	SPRING FEED R		-	1	1	
13-028	+	2BS06120	5MMW161LD045	SPRING FEED L		-	1	1	

Ref. No.		Part Code	Alternative	Description	Applicable Model	SP	120V	230V	Remarks
13-035	+	2BS06430	5MVVL221GE1H	LABEL OPERATION	Excl. KMTW/Philippines	-	1	1	
13-035	+	2BR06510	5MVVL221GE1J	LABEL OPERATION J	KMTW/Philippines	-	1	1	
13-036	+	2BR06530	5MVS421RN003	SHEET FRICTION		X	1	1	
13-037	+	2BS06420	5MVVL171WN02	LABEL SIZE PAPER	PC-60	-	1	1	

11. Tray MP Assembly (20-)

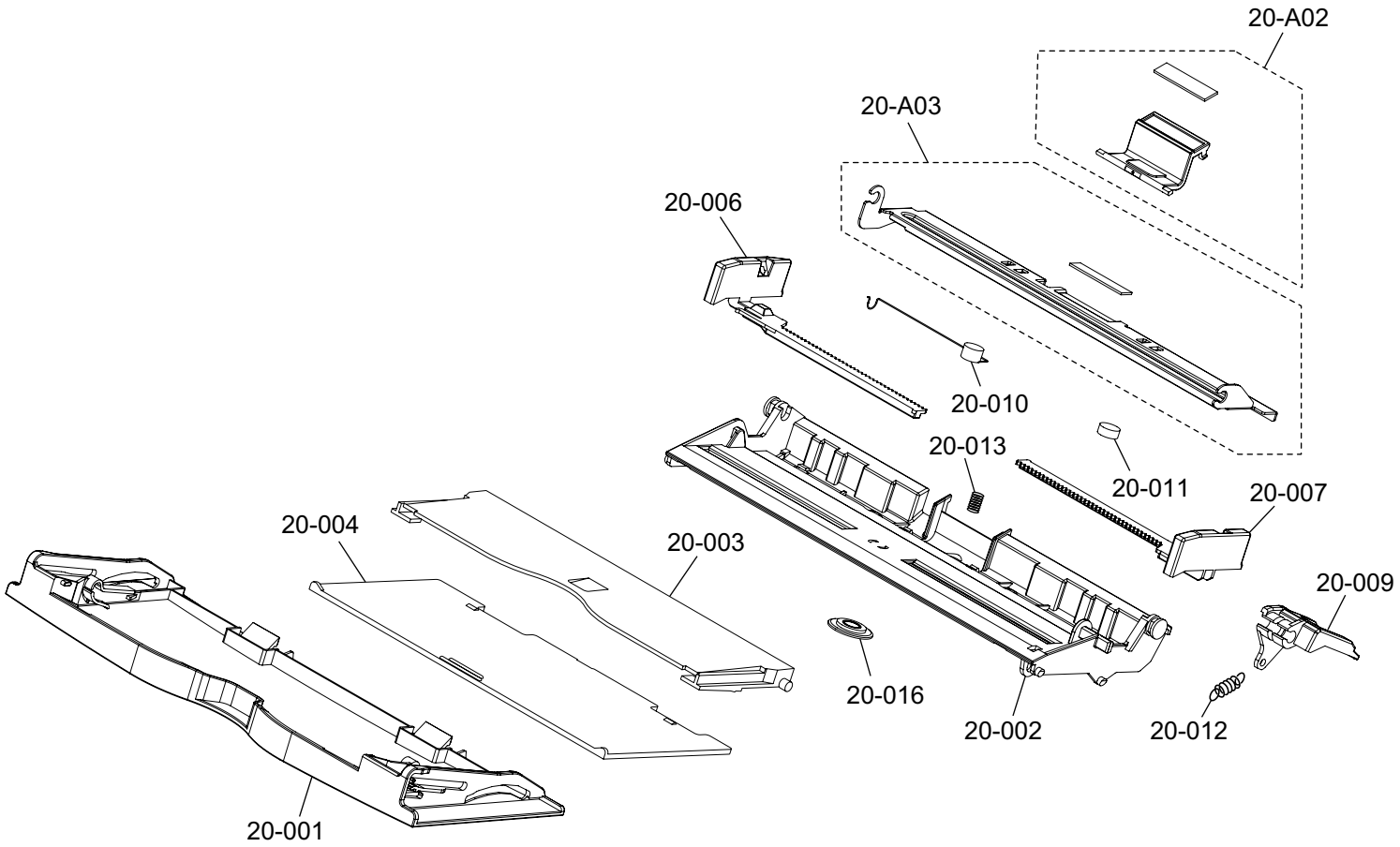

List 11 - Tray MP Assembly (20-)

Ref. No.		Part Code	Alternative	Description	Applicable Model	SP	120V	230V	Remarks
		2FP93100		TRAY M/P ASSY	FS-1920	X	1	1	
		2FR93080		TRAY M/P ASSY	FS-3830N	X	1	1	
		2FY00010		TRAY M/P ASSY	FS-3820N	X	1	1	
20-001	+	2FP06010		COVER M/P	FS-1920	X	1	1	
20-001	+	2FR06010		COVER M/P	FS-3830N	X	1	1	
20-001	+	2FY07010		COVER M/P	FS-3820N	X	1	1	
20-002	+	2BS06250	5MVB864SH009	BASE M/P		X	1	1	
20-003	+	2BS06240	5MVB862SH016	TRAY M/P MID		X	1	1	
20-004	+	2BS06400	5MVS768SH007	TRAY M/P TOP		-	1	1	
20-006	+	2BS06300	5MVL673DH001	GUIDE M/P L		-	1	1	
20-007	+	2BS06310	5MVL673DH002	GUIDE M/P R		-	1	1	
20-009	+	2BS06460	5MVX533DN002	BRACKET BOTTOM		-	1	1	
20-010	+	2BS06180	5MMW461SD003	SP BOTTOM M/P L		-	1	1	
20-011	+	2BS06190	5MMW461SD004	SP BOTTOM M/P R		-	1	1	
20-012	+	2BS06170	5MMW261SM001	SPRING LOCK M/P		-	1	1	
20-013	+	2BS06160	5MMW261LD039	SPRING SEPARATOR		-	1	1	
20-016	+	2B700380	5MVG127DH001	GEAR MANUAL		-	1	1	
20-A02	+	2BR00140	5AAVCASET248	SEPARATOR M/P ASSY		X	1	1	
20-A03	+	2BR00150	5AAVCASET249	BOTTOM MALTI PAD ASY		X	1	1	

12. Packing Assemblies (P-)

Ref. No.	Part Code	Alternative	Description	Applicable Model	SP	120V	230V	Remarks
P-001	2FP77010		PACKING ASSY	FS-1920	X	-	1	
P-001	2FP77020		PACKING ASSY	FS-1920	X	1	-	
P-001	2FR77010		PACKING ASSY	FS-3830N	X	-	1	
P-001	2FR77020		PACKING ASSY	FS-3830N	X	1	-	
P-001	2FY77020		PACKING ASSY	FS-3820N	X	-	1	
P-001	2FY77010		PACKING ASSY	FS-3820N	X	1	-	
P-002	2BR80400	5KKFB88000C4	POLY BAG		X	1	1	
P-003	2BR80370	5KKF254800C4	POLY BAG	For DV	X	1	1	

13. Accessories (A-)

Ref. No.	Part Code	Alternative	Description	Applicable Model	SP	120V	230V	Remarks
A-001	082BR2KX	5PLPXY9APKX	TB-60 BOTTLE ASSY		X	1	1	
A-002	2BR04090	5AAVC0VER255	COVER CASSETTE ASSY	Excl. KMTW	X	1	-	
A-003	4AK85050	5AAYTK20++03	GRID CLEANER 3 ASSY		X	1	1	