KYOCERA

KM-1620
KM-2020

PARTS LIST

Published in June 2005
842C9123
Version 4.0

NOTES

1. Indicate parts number and machine model when placing an order.

e.g.	Parts Number	Parts Name	Machine Model	Cycle	Quantity
	2C904010	FRONT RIGHT COVER	KM-1620	50Hz	1
	2FX04010	FRONT RIGHT COVER	KM-2020	50Hz	1

2. Service calls and freight will be charged separately.

3. Symbols in the "Parts Number" column.

- Parts with "•" are component parts or sub-assemblies of the assembly appearing immediately above them.

e.g.	Parts Number	Parts Name	Parts Number	Parts Name
	2C982010	SET MK-410	•2C918010	BLADE CLEANING
			•2C918340	HOLDER CLAW

- Parts with "••" are component parts or sub-assembly with "•" appearing immediately above them.

e.g.	Parts Number	Parts Name	Parts Number	Parts Name
	•2C993020	PARTS, MC-410, SP	••2C910040	GRID
			••5MMW141LX002	SPRING WIRE

- Parts with "'⊙" indicates the spare parts and the parts without "⊙'" can not be supplied.

4. Items indicated in Description column as (OPTION) are supply parts and should be ordered through your Regional Office.

CONTENTS

FIG. 1 Exterior Covers 2
FIG. 2 Frames 4
FIG. 3 Cassette 6
FIG. 4 Conveying Section 8
FIG. 5 Paper Feed Section 10
FIG. 6 Bypass Section 12
FIG. 7 Exit Section 14
FIG. 8 Scanner Section 16
FIG. 9 Imaging Unit 18
FIG. 10 Fuser Unit 20
FIG. 11 Driving & Cooling Section 22
FIG. 12 Electrical Components 24
FIG. 13 Operation Unit 26
FIG. 14 Original Holder 28
FIG. 15 Option I (DU-410) 30
FIG. 16 Option II 32

• INDEX 34

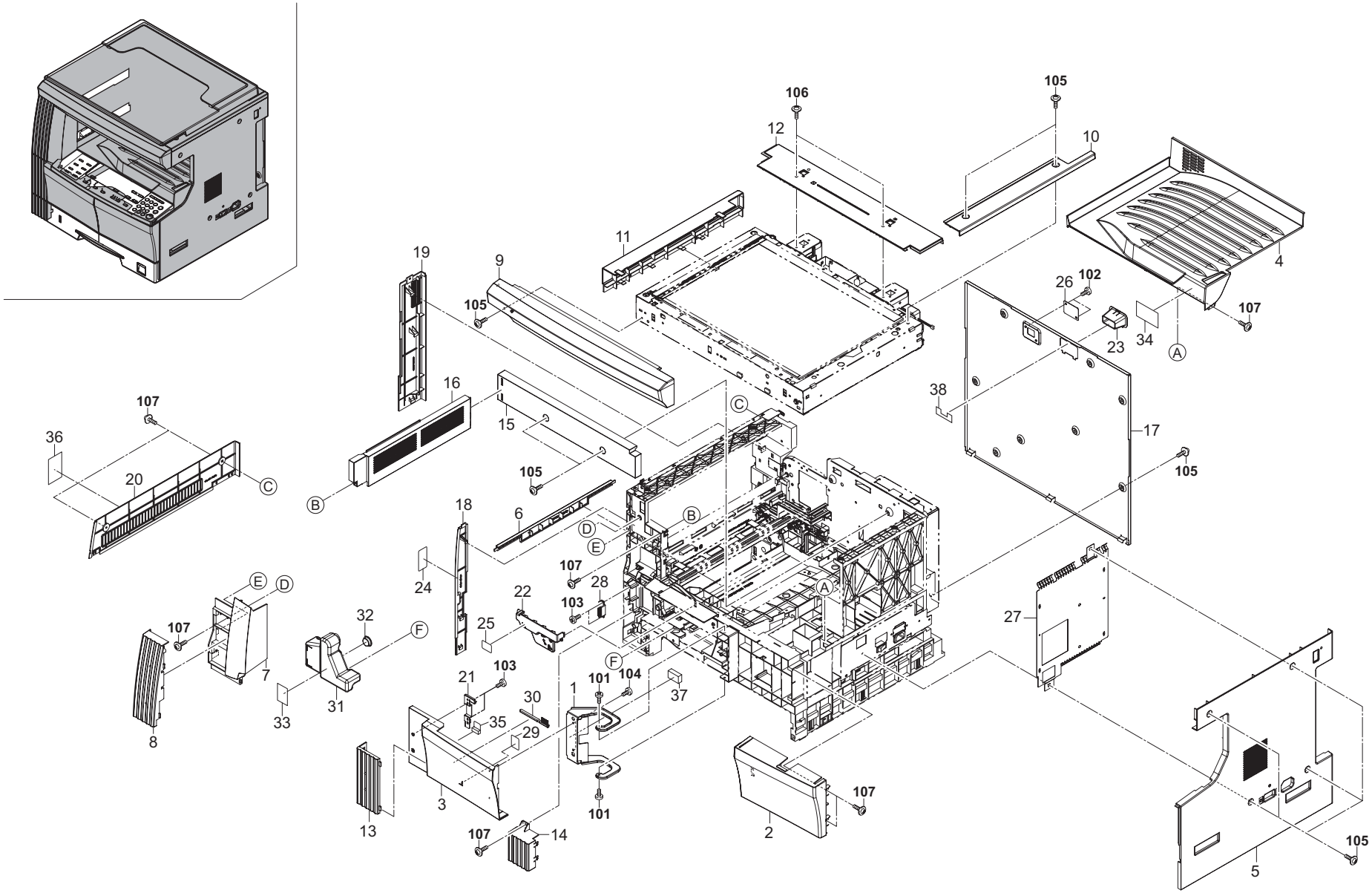
106
105
12
10
11
4
19
9
105
26
102
107
23
34
A
16
38
107
15
C
17
36
20
C
105
B
18
6
B
D
E
107
24
28
22
103
A
E
D
32
F
25
27
107
7
F
103
21
101
104
1
37
30
33
31
35
29
8
3
101
107
13
107
14
2
105
5

FIG. 1 Exterior Covers

2C9-4.0/2FX-2.0

SP	Ref. No.	Part.No.	Alternative.	Description	Quantity 110	120	230	240
	1	2C902140		HINGE FRONT COVER	1	1	1	1
⊙	2	2C904010		FRONT RIGHT COVER (16ppm)	1	1	1	1
⊙	2	2FX04010		FRONT RIGHT COVER (20ppm)	1	1	1	1
⊙	3	2C904470		FRONT LEFT COVER(K)	1	1	1	1
⊙	4	302C904031	2C904031	TRAY EXIT (1/2)	1	1	1	1
⊙	5	2C904041		RIGHT COVER	1	1	1	1
⊙	6	2C904060		LEFT LOW COVER	1	1	1	1
⊙	7	2C904070		UPPER FRONT COVER	1	1	1	1
⊙	8	2C904080		FRONT SIDE COVER UP	1	1	1	1
⊙	9	2C904090		FRONT TOP COVER	1	1	1	1
⊙	10	2C904100		RIGHT TOP COVER	1	1	1	1
⊙	11	2C904110		LEFT TOP COVER	1	1	1	1
⊙	12	2C904120		REAR TOP COVER	1	1	1	1
⊙	13	2C904130		FRONT SIDE COVER MID	1	1	1	1
⊙	14	2C904140		FRONT SIDE COVER LOW	1	1	1	1
⊙	15	2C904150		INNER REAR COVER	1	1	1	1
⊙	16	2C904160		INNER LEFT COVER	1	1	1	1
⊙	17	2C904170		REAR COVER	1	1	1	1
⊙	18	2C904180		LEFT FRONT COVER	1	1	1	1
⊙	19	2C904190		LEFT REAR COVER	1	1	1	1
⊙	20	2C904200		LEFT MIDDLE COVER	1	1	1	1
	21	2C904290		PLATE FRONT COVER	1	1	1	1
⊙	22	302C904372	2C904372	INNER FRONT COVER	1	1	1	1
⊙	23	2C904410		COVER DSUB	1	1	1	1
⊙	24	2C905080		LABEL CONVEYING JAM	1	1	1	1
⊙	25	2C905100		LABEL RADIATION		1		
⊙	26	2C912430		LID KMAS	1	1	1	1
	27	2C926130		SHIELD RIGHT COVER	1	1	1	1
	28	60804120		MAGNET CATCH	1	1	1	1
⊙	29	2BL05070		LABEL SEP CLEANING	1	1	1	1
	30	2BL16220	5AAVBRUSH036	BRUSH CLEANER ASSY	1	1	1	1
	31	2C918150		TANK DISPOSAL	1	1	1	1
	32	2C918170		CAP TANK DISPOSAL	1	1	1	1
	33	2AV73580		LABEL,TONER DISPOSAL TANK HK	1	1	1	1
	34	2C905180		LABEL ERROR CODE J		1	1	1
	34	2C905190		LABEL ERROR CODE C	1			
⊙	35	2C904480		FILM FRONT COVER	1	1	1	1
⊙	36	2C905220		LABEL LEFT COVER	1	1	1	1
	37	2C904510		SPONGE COVER	1	1	1	1
⊙	38	302C904560	2C904560	STOPPER COVER DSUB	1	1	1	1

SP	Ref. No.	Part.No.	Alternative.	Description	Quantity 110	120	230	240
	101	B1304100		BINDING SCREW BVM4X10 (BLACK)				
	102	5MBTPB3006TZ	B3023060	BIND T.T SCREW(+) / M3 X 6 S-ZMC S-T				
	103	B3313080		BINDING TAP-TITE SCREW M3X08				
	104	B3314100		BINDING TAP-TITE P BRONZE SCREW M4X				
	105	B4104060		TRIPLE SCREW M4X6(CHROMIUM)				
	106	B4104100		TRIPLE SCREW M4X10(CHROMIUM)				
	107	BAA64100		+TP TAP-TITE P SCREW M4X10				

• Parts with "•" are component parts or sub-assemblies of the assembly appearing immediately above them.

• Parts with "⊙'" indicates the spare parts.

• Parts with "• •" are component parts or sub-assembly with "•" appearing immediately above them.

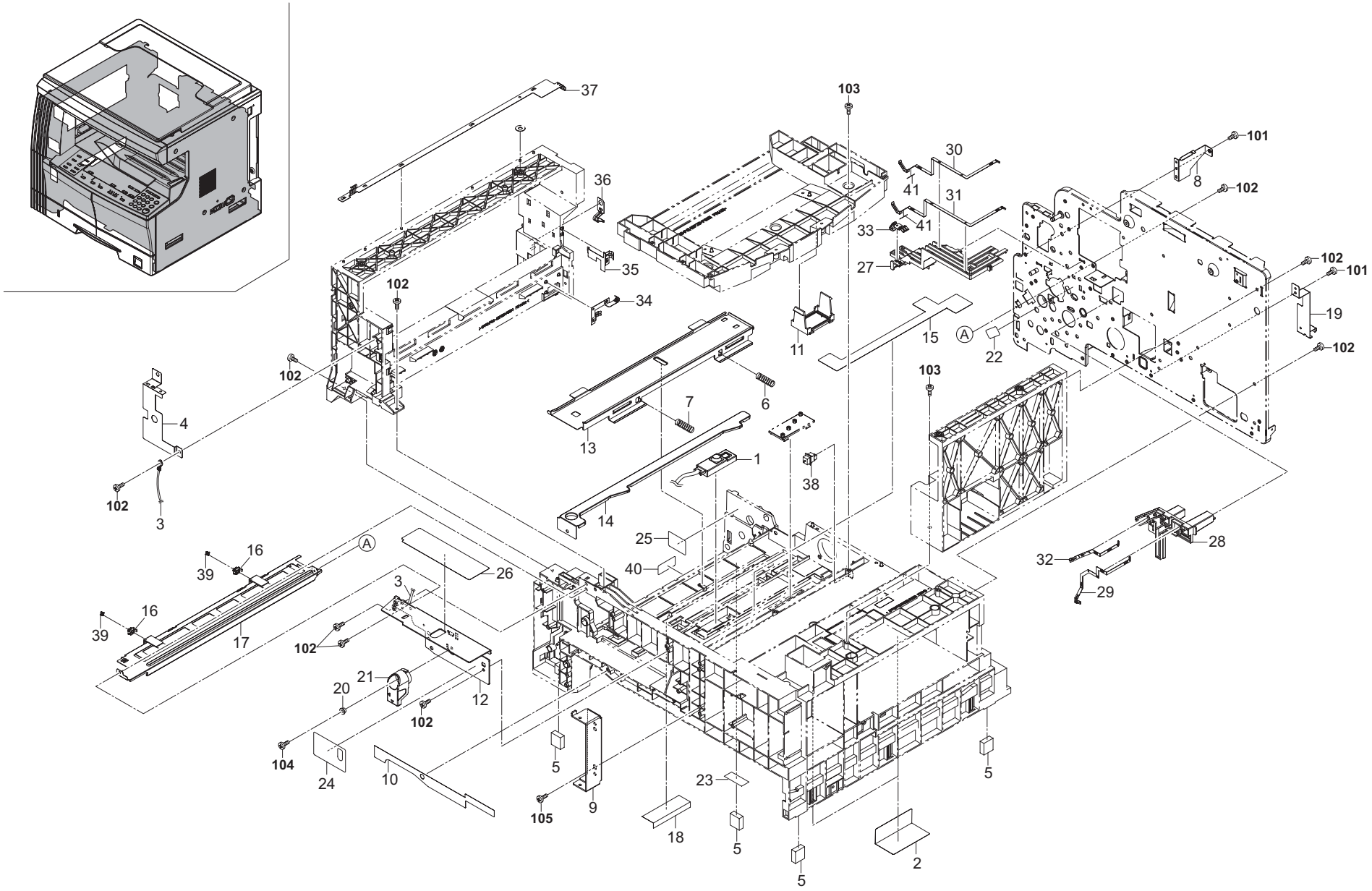
37
103
30
101
36
41
31
8
102
33
41
35
27
102
101
102
34
19
11
15
A
22
102
102
103
4
7
6
13
1
38
102
3
14
25
28
16
A
40
32
39
26
29
3
16
39
17
102
21
20
12
102
104
24
10
5
23
5
105
9
18
5
5
2

FIG. 2 Frames

SP	Ref. No.	Part.No.	Alternative.	Description	Quantity			
					110	120	230	240
⊙	1	2C901180		CONT SENSOR ASSY	1	1	1	1
	2	2C902230		FILM BASE L	2	2	2	2
	3	2C927790		WIRE UPPER LEFT	1	1	1	1
	4	2C926150		SHIELD UPPER LEFT B	1	1	1	1
	5	2C902070		BASE RUBBER	4	4	4	4
	6	2C902080		SPRING DEV PUSH	1	1	1	1
	7	2C902590		SPRING DEV PUSH F	1	1	1	1
	8	2C902100		MOUNT REAR COVER	1	1	1	1
	9	2C902110		MOUNT FRONT COVER	1	1	1	1
	10	2C902120		PANEL FRONT	1	1	1	1
	11	2C902130		MOUNT CONT PCB	1	1	1	1
	12	2C902151		MOUNT CONT LEVER	1	1	1	1
	13	2C902160		RAIL DLP	1	1	1	1
	14	2C902170		LEVER DEV PUSH	1	1	1	1
⊙	15	2C902180		FILM BASE	1	1	1	1
	16	2C902280		HOLDER PULLEY	2	2	2	2
	17	2C902200		RAIL CLEANING	1	1	1	1
	18	2C902240		FILM BASE B	1	1	1	1
	19	2C902260		GROUND PLATE FRAME	1	1	1	1
	20	2C902520		COLLAR LEVER CONT.	1	1	1	1
⊙	21	2C902540		LEVER LOCK CONT.	1	1	1	1
	22	302FT26040	2FT26040	FILM TERMINAL MAIN	1	1	1	1
	23	2C902270		SPACER BASE	1	1	1	1
	24	2C905071		LABEL CONT SET	1	1	1	1
	25	2C905110		LABEL DRUM CAUTION	1	1	1	1
	26	2C925190		SHEET OPERATION PCB	1	1	1	1
	27	2C926010		BASE TERMINAL TRANSFER	1	1	1	1
	28	2C926020		BASE TERMINAL MAIN	1	1	1	1
	29	2C926030		TERMINAL DLP	1	1	1	1
	30	2C926040		TERMINAL TRANSFER	1	1	1	1
	31	2C926050		TERMINAL SEPARATION	1	1	1	1
	32	2C926060		TERMINAL MAIN	1	1	1	1
	33	2C926080		GROUND PLATE CONVEYING	1	1	1	1
	34	2C926100		TERMINAL FUSER	1	1	1	1
	35	302C926111	2C926111	GROUND PLATE EXIT	1	1	1	1
	36	2C926120		GROUND PLATE FUSER	1	1	1	1
	37	2C926140		SHIELD UPPER LEFT	1	1	1	1
⊙	38	2C927140		SWITCH CONTAINER	1	1	1	1
	39	2A118370		PULLEY,DRUM SEPARATION	2	2	2	2
	40	302C906430	2C906430	SPACER BYPASS	1	1	1	1
	41	302C926170	2C926170	TAPE TERMINAL	2	2	2	2

SP	Ref. No.	Part.No.	Alternative.	Description	Quantity			
					110	120	230	240
	101	5MBTPB3006TZ	B3023060	BIND T.T SCREW(+) / M3 X 6 S-ZMC S-T				
	102	B3314100		BINDING TAP-TITE P BRONZE SCREW M4X1				
	103	B1A64120		+BIND TAP-TITE P SCREW M4X12				
	104	B4104100		TRIPLE SCREW M4X10(CHROMIUM)				
	105	BAA64100		+TP TAP-TITE P SCREW M4X10				

• Parts with "•" are component parts or sub-assemblies of the assembly appearing immediately above them.

• Parts with "⊙'" indicates the spare parts.

• Parts with "• •" are component parts or sub-assembly with "•" appearing immediately above them.

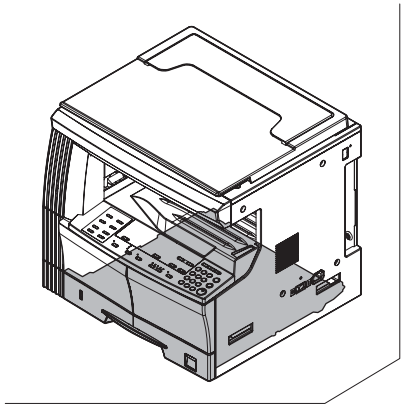

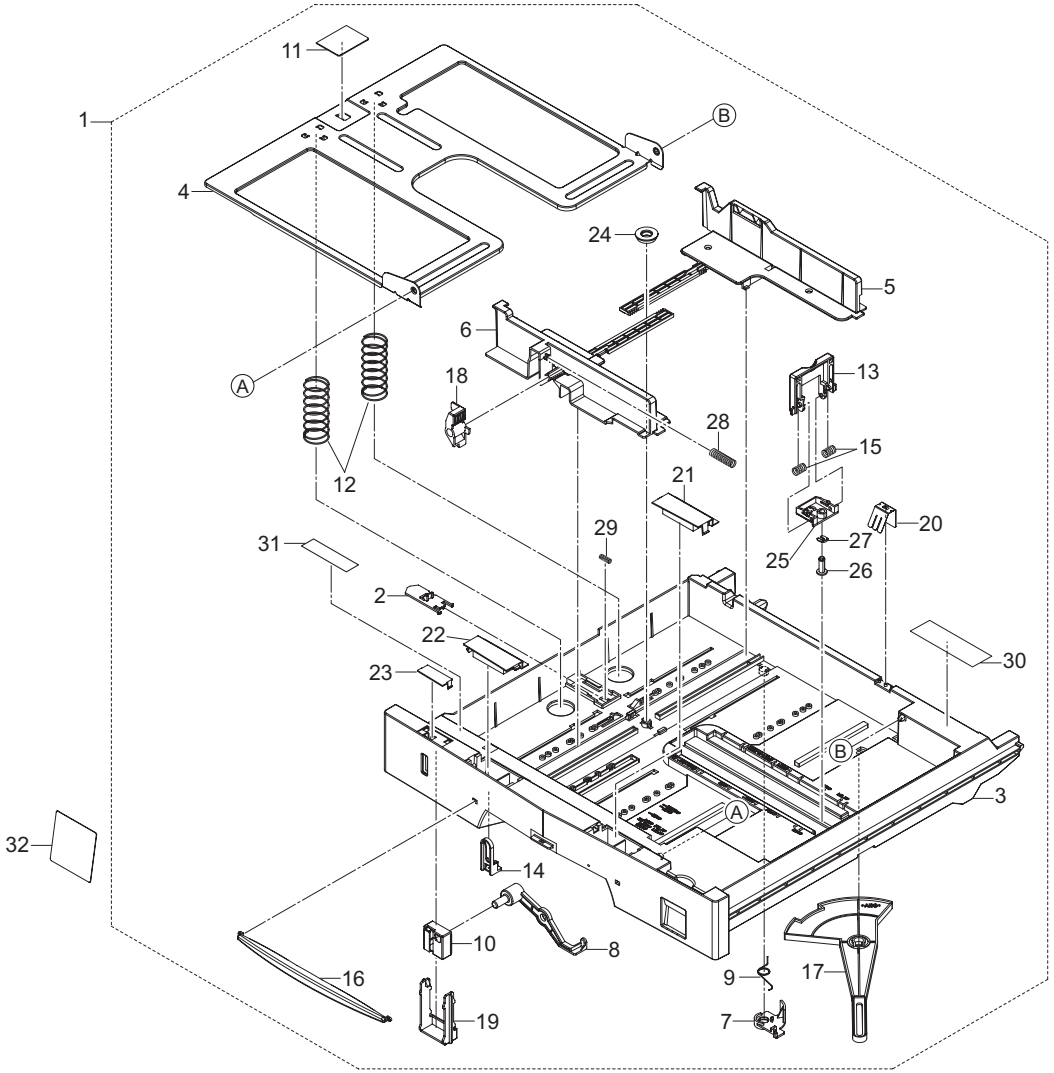
11
1
B
4
24
5
6
A
18
13
28
15
12
21
29
20
31
27
25
26
2
22
30
23
B
3
A
32
14
10
8
16
9
17
19
7

FIG. 3 Cassette

SP	Ref. No.	Part.No.	Alternative.	Description	Quantity			
					110	120	230	240
⊙	1	302C993011	2C993011	PARTS,CT-410,SP	1	1	1	1
	2	•19507050		LEVER,CASSETTE BASE RELEASE	1	1	1	1
	3	•2C907010		CASSETTE	1	1	1	1
	4	•2C907020		BOTTOM CASSETTE	1	1	1	1
⊙	5	•2C907030		REAR CURSOR C	1	1	1	1
⊙	6	•2C907040		FRONT CURSOR C	1	1	1	1
	7	•2C907050		PLATE SIDE SW	1	1	1	1
	8	•2C907070		LEVER INDICATOR	1	1	1	1
⊙	9	•2C907090		SPRING SIDE SW	1	1	1	1
	10	•2C907110		MARKER INDICATOR	1	1	1	1
⊙	11	•2C907140		PAD CASSETTE	1	1	1	1
⊙	12	•2C907150		SPRING BOTTOM	2	2	2	2
⊙	13	•2C907190		RIGHT CURSOR A	1	1	1	1
	14	•2C907200		STOPPER ARM	1	1	1	1
	15	•2C907360		SPRING CURSOR R	2	2	2	2
⊙	16	•2C907370		MARKER CASSETTE	1	1	1	1
	17	•2C907380		TURN PLATE CASSETTE	1	1	1	1
⊙	18	•2C907390		LEVER CURSOR C	1	1	1	1
	19	•2C907490		STOPPER INDICATOR	1	1	1	1
	20	•2C907500		GROUND PLATE BOTTOM	1	1	1	1
	21	•2C907550		LID CASSETTE A	1	1	1	1
	22	•2C907560		LID CASSETTE B	1	1	1	1
	23	•2C907570		LID CASSETTE C	1	1	1	1
⊙	24	•34907141		GEAR 18,CASSETTE	1	1	1	1
⊙	25	•2C907590		HOLDER RIGHT CURSOR	1	1	1	1
⊙	26	•2C907600		PIN CURSOR C	1	1	1	1
⊙	27	•5MVX111DN003	2A806250	RING STOPPER	1	1	1	1
⊙	28	•2C907620		SPRING LEVER F	1	1	1	1
⊙	29	•76508130		SPRING BELT GUIDE ROLLER	1	1	1	1
	30	•2C905200		LABEL CASSETTE LGR	1	1	1	1
	31	•302C905280	2C905280	LABEL CASSETTE	1	1	1	1
⊙	32	2C905230		SHEET CASSETTE SIZE(C)	1	1	1	1
⊙	32	2C905240		SHEET CASSETTE SIZE(I)	1	1	1	1

• Parts with "•" are component parts or sub-assemblies of the assembly appearing immediately above them.

• Parts with "⊙'" indicates the spare parts.

• Parts with "• •" are component parts or sub-assembly with "•" appearing immediately above them.

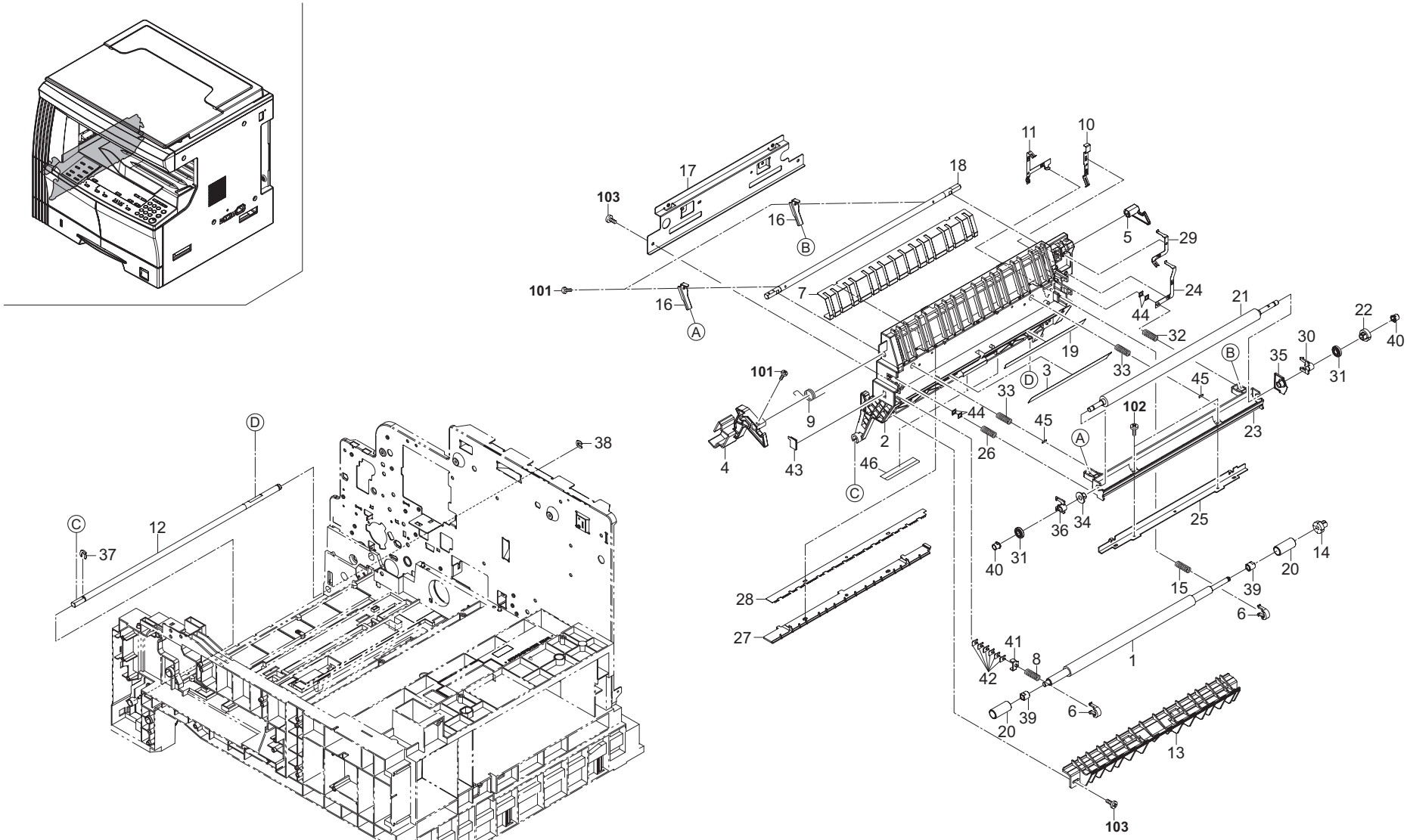

103
17
18
11
10
16
B
5
29
101
16
A
7
24
44
21
22
32
30
40
19
33
B
35
31
101
D
3
33
45
9
44
45
102
23
4
43
2
26
A
46
C
34
25
36
40
31
14
20
15
39
6
28
27
41
8
1
42
39
6
20
13
103
D
38
C
12
37

FIG. 4 Conveying Section

2C9-4.0/2FX-2.0

SP	Ref. No.	Part.No.	Alternative.	Description	Quantity			
					110	120	230	240
⊙	1	2C916020		ROLLER REGIST LEFT	1	1	1	1
	2	302C916032	2C916032	BASE CONVEYING	1	1	1	1
⊙	3	2C916040		FILM REGIST GUIDE	1	1	1	1
⊙	4	2C916060		LEVER CONVEYING FRONT	1	1	1	1
⊙	5	2C916070		LEVER CONVEYING REAR	1	1	1	1
⊙	6	2C916080		STOPPER BUSH REG	2	2	2	2
	7	2C916090		GUIDE CONVEYING	1	1	1	1
	8	2C916100		SPRING REGIST F	1	1	1	1
	9	2C916120		SPRING CONVEYING BASE	1	1	1	1
	10	2C916130		GROUND PLATE REG	1	1	1	1
	11	2C916140		GROUND PLATE CONVEYING	1	1	1	1
	12	2C916160		SHAFT CONVEYING	1	1	1	1
	13	2C916170		GUIDE FEED A	1	1	1	1
⊙	14	2C916180		GEAR Z15 REGIST	1	1	1	1
	15	2C916190		SPRING REGIST R	1	1	1	1
	16	2C916200		LEVER TRANS GUIDE	2	2	2	2
	17	2C916220		REINFORCEMENT CONVEYING	1	1	1	1
	18	2C916230		SHAFT CONVEYING LEVER	1	1	1	1
	19	2C916240		FILM REGIST GUIDE R	1	1	1	1
	20	2C916250		COLLAR REGIST	2	2	2	2
⊙	21	2C917010		ROLLER TRANSFER	1	1	1	1
⊙	22	2C917020		GEAR TRANSFER	1	1	1	1
	23	302C917031	2C917031	GUIDE LEFT TRANS FRONT	1	1	1	1
	24	2C917040		TERMINAL PLATE TRANS	1	1	1	1
	25	2C917050		REINFORCEMENT TRANS GUIDE	1	1	1	1
	26	2C917060		SPRING TRANS F	1	1	1	1
⊙	27	2C917070		HOUSING STA ELIMINATION	1	1	1	1
⊙	28	2C917080		PLATE STA ELIMINATION	1	1	1	1
	29	2C917090		TERMINAL STA ELIMINATION	1	1	1	1
⊙	30	2C917100		BUSH TRANSFER	1	1	1	1
⊙	31	2C917110		COLLAR TRANS	2	2	2	2
	32	2C917120		SPRING TRANS R	1	1	1	1
	33	2C917150		SPRING GUIDE TRANS	2	2	2	2
	34	2C917160		BUSH TRANS GUIDE F	1	1	1	1
	35	2C917170		BUSH TRANS GUIDE R	1	1	1	1
	36	2C917180		BUSH TRANS ROLL F	1	1	1	1
⊙	37	2BC06910		STOPPER 6	1	1	1	1
⊙	38	2BC06980		STOPPER 5	1	1	1	1
⊙	39	2C916260		BUSH REGIST	2	2	2	2
⊙	40	2BL17030		COLLAR TRANS ROLLER	2	2	2	2
	41	2C916270		SPACER REG F	1	1	1	1
	42	2C916280		SPACER REG T0.5	6	6	6	6
	43	2C916290		FILM CONV BASE	1	1	1	1
	44	2C917200		SPACER TRANS ROLL	4	4	4	4
	45	2C917210		SPACER GUIDE LEFT TRANS	2	2	2	2
	46	2C916300		FILM DU GUIDE	2	2	2	2

SP	Ref. No.	Part.No.	Alternative.	Description	Quantity			
					110	120	230	240
	101	B1303050		BINDING SCREW BVM3X5 (BLACK)				
	102	5MBTPB3006TZ	B3023060	BIND T.T SCREW(+) / M3 X 6 S-ZMC S-T				
	103	B3313080		BINDING TAP-TITE SCREW M3X08				

• Parts with "•" are component parts or sub-assemblies of the assembly appearing immediately above them.

• Parts with "⊙'" indicates the spare parts.

• Parts with "• •" are component parts or sub-assembly with "•" appearing immediately above them.

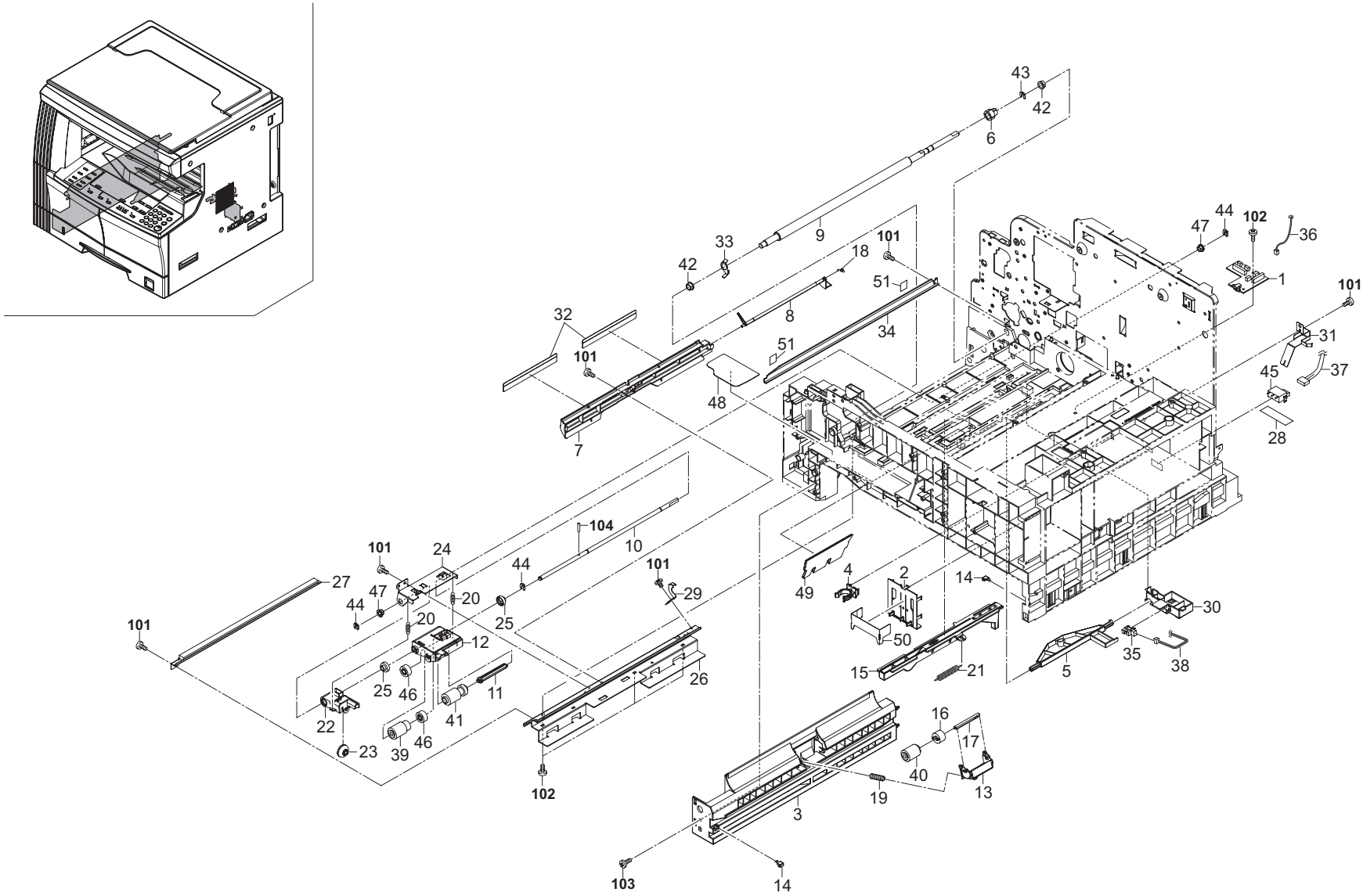
43
42
6
9
33
42
18
101
51
8
34
32
101
51
48
7
47
44
102
36
1
101
31
45
37
28
104
10
101
24
44
27
47
44
20
25
101
29
20
12
25
46
11
22
23
39
46
41
26
102
49
4
2
14
50
15
21
5
30
35
38
16
17
40
19
13
3
103
14

FIG. 5 Paper Feed Section

SP	Ref. No.	Part.No.	Alternative.	Description	Quantity 110	120	230	240
⊙	1	2C901100		PCB CASSETTE ASSY	1	1	1	1
	2	2C907060		PLATE SIZE DETECTION	1	1	1	1
	3	2C907080		LEFT RAIL CASSETTE	1	1	1	1
⊙	4	2C907100		STOPPER CASSETTE	1	1	1	1
⊙	5	2C907120		ACTUATOR EMPTY	1	1	1	1
⊙	6	2C907130		GEAR Z15 REGIST	1	1	1	1
	7	302C907161	2C907161	RIGHT GUIDE REGIST	1	1	1	1
⊙	8	302C907171	2C907171	ACTUATOR REGIST	1	1	1	1
	9	2C907180		RIGHT ROLL REGIST	1	1	1	1
	10	2C907210		SHAFT PAPER FEED	1	1	1	1
	11	2C907230		SHAFT PICK UP B	1	1	1	1
	12	2C907240		PLATE PICK UP B	1	1	1	1
	13	2C907250		HOLDER RETARD	1	1	1	1
⊙	14	2C907260		SLIDER RAIL	2	2	2	2
	15	2C907270		LEVER PICK UP	1	1	1	1
⊙	16	2C907280		TORQUE LIMITER 340	1	1	1	1
	17	2C907300		SHAFT RETARD	1	1	1	1
⊙	18	2C907290		SPRING REGIST B	1	1	1	1
	19	2C907320		SPRING RETARD	1	1	1	1
	20	2C907340		SPRING PICK UP	2	2	2	2
	21	2C907350		SPRING LEVER	1	1	1	1
	22	2C907400		HOLDER PULLEY A	1	1	1	1
	23	2C907410		PULLEY GUIDE A	1	1	1	1
	24	2C907420		HOLDER FEED SHAFT	1	1	1	1
⊙	25	2C907430		BUSH PAPER FEED C	2	2	2	2
	26	2C907440		RIGHT MOUNT REGIST	1	1	1	1
⊙	27	2C993210		PARTS,REGIST CLEANER,ASSY	1	1	1	1
⊙	28	302C907650	2C907650	SPACER SW	1	1	1	1
	29	2C907470		GROUND PLATE REG R	1	1	1	1
	30	2C907480		HOLDER SENSOR	1	1	1	1
	31	2C907510		GROUND PLATE CASS	1	1	1	1
	32	2C907530		FILM REGIST R	2	2	2	2
	33	2C907540		GROUND PLATE REG F	1	1	1	1
⊙	34	302C993290	2C993290	PARTS,FILM TRANS FRONT ASSY,SP	1	1	1	1
⊙	35	2C927210		SENSOR 248NL1	1	1	1	1
	36	2C927520		WIRE CASSETTE PCB	1	1	1	1
	37	2C927670		WIRE CASSETTE SW	1	1	1	1
	38	2C927750		WIRE CASSETTE PE	1	1	1	1
⊙	39	2AR07220		PULLEY,PAPER FEED	1	1	1	1
⊙	40	2AR07230		PULLEY,SEPARATION	1	1	1	1
⊙	41	2AR07240		PULLEY,LEADING FEED	1	1	1	1
⊙	42	2BC06510		BUSHING 8	2	2	2	2
⊙	43	2BC06910		STOPPER 6	1	1	1	1
⊙	44	2BC06980		STOPPER 5	3	3	3	3
⊙	45	5ESP03090001+01	SP000360	PUSH SWITCH 03 SN	1	1	1	1
⊙	46	29807100		GEAR 16,BYPASS	2	2	2	2
⊙	47	3CY07080		BUSHING 6	2	2	2	2
	48	2C907610		SHEET TONER TANK	1	1	1	1
	49	2C907580		FILM BASE RIB	2	2	2	2
	50	2C907640		STOPPER PLATE SIZE	1	1	1	1
	51	302DA16110	2DA16110	SPACER TRANS J	2	2	2	2
	101	5MBTPB3006TZ	B3023060	BIND T.T SCREW(+) / M3 X 6 S-ZMC S-T				
	102	B3313080		BINDING TAP-TITE SCREW M3X08				
	103	B1A64120		+BIND TAP-TITE P SCREW M4X12				
	104	5MBP2010WXSP	E0020100	SPRING PIN / M2 X 10 S-BLK				

• Parts with "•" are component parts or sub-assemblies of the assembly appearing immediately above them.

• Parts with "⊙'" indicates the spare parts.

• Parts with "• •" are component parts or sub-assembly with "•" appearing immediately above them.

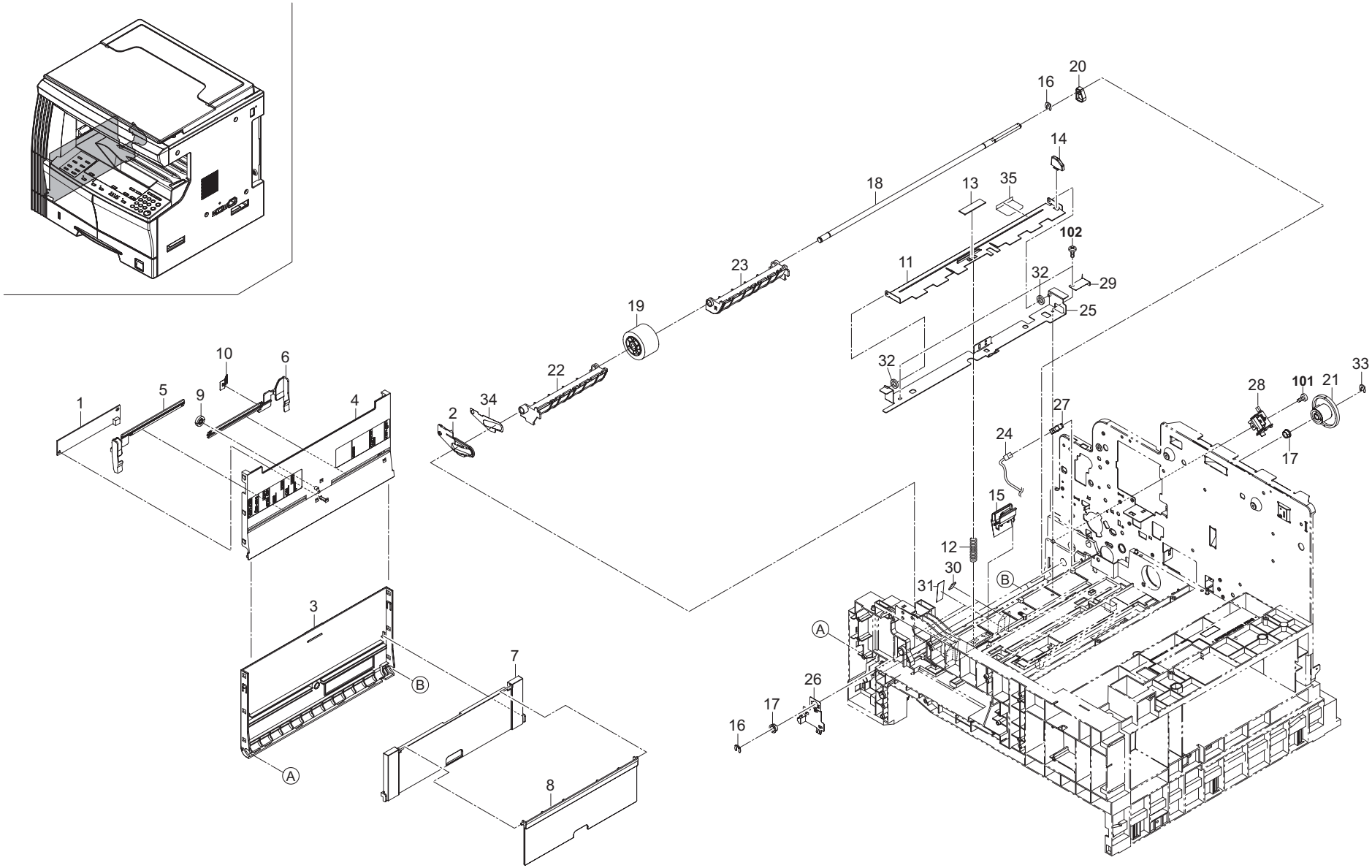
1
5
9
10
6
4
2
34
22
19
23
18
16
20
14
13
35
102
11
32
29
25
32
33
28
101
21
27
24
17
15
12
30
31
B
A
3
7
B
A
26
17
16
8

FIG. 6 Bypass Section

2C9-4.0/2FX-2.0

SP	Ref. No.	Part.No.	Alternative.	Description	Quantity 110	120	230	240
⊙	1	2C901050		PCB MPF SIZE ASSY	1	1	1	1
	2	2C904360		STRAP LEFT COVER C	1	1	1	1
⊙	3	2C906010		COVER BYPASS	1	1	1	1
⊙	4	2C906020		TABLE BYPASS	1	1	1	1
⊙	5	2C906030		FRONT CURSOR BYPASS	1	1	1	1
⊙	6	2C906040		REAR CURSOR BYPASS	1	1	1	1
⊙	7	2C906050		BYPASS SUB TABLE A	1	1	1	1
⊙	8	2C906060		BYPASS SUB TABLE B	1	1	1	1
⊙	9	2C906080		GEAR 18 BYPASS	1	1	1	1
	10	2C906090		TERMINAL PAPER SIZE	1	1	1	1
	11	2C906101		LIFT PLATE BYPASS	1	1	1	1
	12	2C906110		SPRING BYPASS LIFT	1	1	1	1
⊙	13	2C906120		SHEET BYPASS LIFT	1	1	1	1
⊙	14	2C906130		STOPPER BYPASS	1	1	1	1
⊙	15	2C993140		PARTS,BYPASS PAD,SP	1	1	1	1
⊙	16	2BC06910		STOPPER 6	2	2	2	2
⊙	17	2BC06510		BUSHING 8	2	2	2	2
	18	2C906171		SHAFT BYPASS	1	1	1	1
⊙	19	2C993130		PARTS,BYPASS PULLEY,SP	1	1	1	1
⊙	20	2C906190		CAM BYPASS	1	1	1	1
⊙	21	2C906200		CLUTCH BYPASS FEED	1	1	1	1
	22	2C906210		BYPASS PAPER GUIDE F	1	1	1	1
	23	2C906220		BYPASS PAPER GUIDE R	1	1	1	1
	24	2C927620		WIRE MPF	1	1	1	1
	25	2C906241		MOUNT LIFT PLATE	1	1	1	1
	26	2C906250		GROUND PLATE BYPASS	1	1	1	1
⊙	27	2C927210		SENSOR 248NL1	1	1	1	1
⊙	28	302C927051	2C927051	SOLENOID BYPASS	1	1	1	1
	29	2C906280		GROUND PLATE LIFT	1	1	1	1
	30	2C906290		SHEET BYPASS GUIDE	2	2	2	2
⊙	31	2C906300		SEAL BYPASS GUIDE	2	2	2	2
	32	2C906310		SEAL BYPASS LIFT	2	2	2	2
⊙	33	2BC06980		STOPPER 5	1	1	1	1
	34	2C904490		PLATE FRONT STRAP	1	1	1	1
⊙	35	302C906330	2C906330	FILM PROTECT BYPASS B	1	1	1	1

SP	Ref. No.	Part.No.	Alternative.	Description	Quantity 110	120	230	240
	101	B3313080		BINDING TAP-TITE SCREW M3X08				
	102	B3314100		BINDING TAP-TITE P BRONZE SCREW M4				

• Parts with "•" are component parts or sub-assemblies of the assembly appearing immediately above them.

• Parts with "⊙'" indicates the spare parts.

• Parts with "• •" are component parts or sub-assembly with "•" appearing immediately above them.

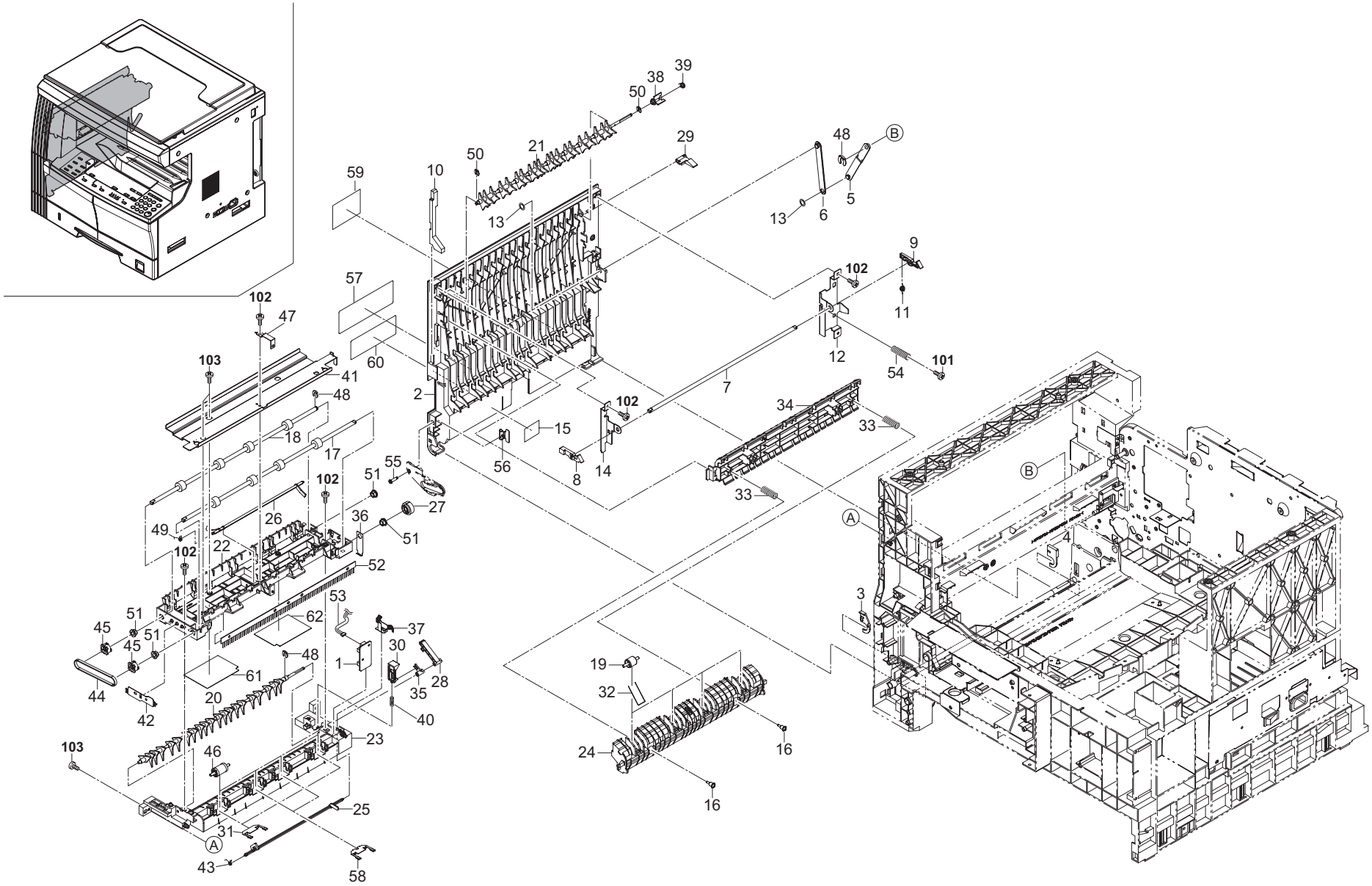
39
38
50
21
29
48
B
59
10
50
13
13
6
5
9
102
57
11
102
47
12
101
54
60
103
41
7
48
2
102
34
33
18
15
17
56
8
14
55
102
51
33
B
27
26
36
A
49
51
22
102
52
4
53
3
51
62
37
45
51
30
45
48
1
28
61
19
44
20
35
32
42
40
23
103
46
24
16
16
25
31
A
43
58

FIG. 7 Exit Section

SP	Ref. No.	Part.No.	Alternative.	Description	Quantity			
					110	120	230	240
⊙	1	2C901060		PCB EJECT SW ASSY	1	1	1	1
⊙	2	2C904050		LEFT COVER	1	1	1	1
	3	2C904210		STOPPER LEFT COVER F	1	1	1	1
	4	2C904220		STOPPER LEFT COVER R	1	1	1	1
	5	2C904231		STRAP LEFT COVER A	1	1	1	1
	6	2C904241		STRAP LEFT COVER B	1	1	1	1
	7	2C904250		SHAFT HOOK	1	1	1	1
	8	2C904260		HOOK LEFT COVER F	1	1	1	1
	9	2C904270		HOOK LEFT COVER R	1	1	1	1
	10	2C904280		JUNCTION PLATE HOOK	1	1	1	1
	11	2C904350		SPRING LEFT HOOK	1	1	1	1
	12	2C904390		PLATE LEFT SW	1	1	1	1
	13	2C904550		CUT WASHER 5	2	2	2	2
	14	2C904430		PLATE LEFT HOOK	1	1	1	1
⊙	15	2C905090		LABEL HIGH TEMP	1	1	1	1
	16	2C921400		SHOULDER SCREW EXIT	2	2	2	2
⊙	17	2C921010		ROLLER EXIT INNER	1	1	1	1
⊙	18	2C921020		ROLLER FEED SHIFT	1	1	1	1
⊙	19	2C921040		PULLEY FEED SHIFT	4	4	4	4
	20	2C921050		GUIDE SHIFT	1	1	1	1
	21	2C921061		GUIDE SEPARATE	1	1	1	1
	22	302C921072	2C921072	HOUSING EXIT UPPER	1	1	1	1
	23	2C921080		HOUSING EXIT LOWER	1	1	1	1
	24	2C921091		GUIDE EXIT LOWER	1	1	1	1
⊙	25	2C921100		ACTUATOR EXIT INNER	1	1	1	1
⊙	26	2C921110		ACTUATOR EXIT LEFT	1	1	1	1
⊙	27	2C921120		GEAR 23 EXIT	1	1	1	1
	28	302C921151	2C921151	ARM SHIFT	1	1	1	1
⊙	29	2C921160		ARM SEPARATE	1	1	1	1
	30	2C921180		ARM LINK	1	1	1	1
	31	2C921190		SPRING PULLEY INNER	2	2	2	2
	32	2C921200		SPRING PULLEY FEED SHIFT	4	4	4	4
	33	2C921221		SPRING GUIDE DU	2	2	2	2
	34	2C921231		GUIDE DU	1	1	1	1
	35	2C921240		ARM SHIFT B	1	1	1	1
	36	2C921390		PLATE EXIT HOLDER	1	1	1	1
	37	2C921260		PLATE EARTH EXIT 2	1	1	1	1
	38	2C921270		ARM SEPARATE B	1	1	1	1
	39	2C921280		SPRING SEPARATE	1	1	1	1
	40	2C921290		SPRING LINK	1	1	1	1
	41	302C921302	2C921302	BRACKET EXIT	1	1	1	1
	42	2C921310		PLATE EARTH EXIT B	1	1	1	1
	43	2C921330		SPRING ACTUATOR INNER	1	1	1	1
⊙	44	2C921340		BELT EXIT	1	1	1	1
⊙	45	2C921350		PULLEY EXIT	2	2	2	2
⊙	46	2C921360		PULLEY EJECT	4	4	4	4
	47	2C921370		STOPPER SE	1	1	1	1
⊙	48	2BC06980		STOPPER 5	3	3	3	3
	49	2BL21260		SPRING ACTUATOR L	1	1	1	1
⊙	50	5MVX111DN007	2BT11070	STOPPER 3	2	2	2	2
⊙	51	3CY07080		BUSHING 6	4	4	4	4
⊙	52	34821210		STATIC ELIMINATOR B,EJECT	1	1	1	1
	53	2C927530		WIRE EJECT	1	1	1	1
	54	2C904440		SPRING LEFT COVER	1	1	1	1
⊙	55	302C904530	2C904530	PIN FRONT STRAP B	1	1	1	1
⊙	56	302C904520	2C904520	PLATE FRONT STRAP B	1	1	1	1
⊙	57	2C905170		LABEL BYPASS TABLE	1	1	1	1
	58	2C921380		SPRING PULLEY EJECT	2	2	2	2
⊙	59	2C905270		LABEL BYPASS JAM	1	1	1	1
⊙	60	302DA05050	2DA05050	LABEL BYPASS	1	1	1	1
	61	302DA21021	2DA21021	SHEET EJECT RIGHT	1	1	1	1
	62	302DA21031	2DA21031	SHEET EJECT LEFT	1	1	1	1
	101	B1303050		BINDING SCREW BVM3X5 (BLACK)				
	102	B3313080		BINDING TAP-TITE SCREW M3X08				
	103	B3314100		BINDING TAP-TITE P BRONZE SCREW M4X				

• Parts with "•" are component parts or sub-assemblies of the assembly appearing immediately above them.

• Parts with "⊙'" indicates the spare parts.

• Parts with "• •" are component parts or sub-assembly with "•" appearing immediately above them.

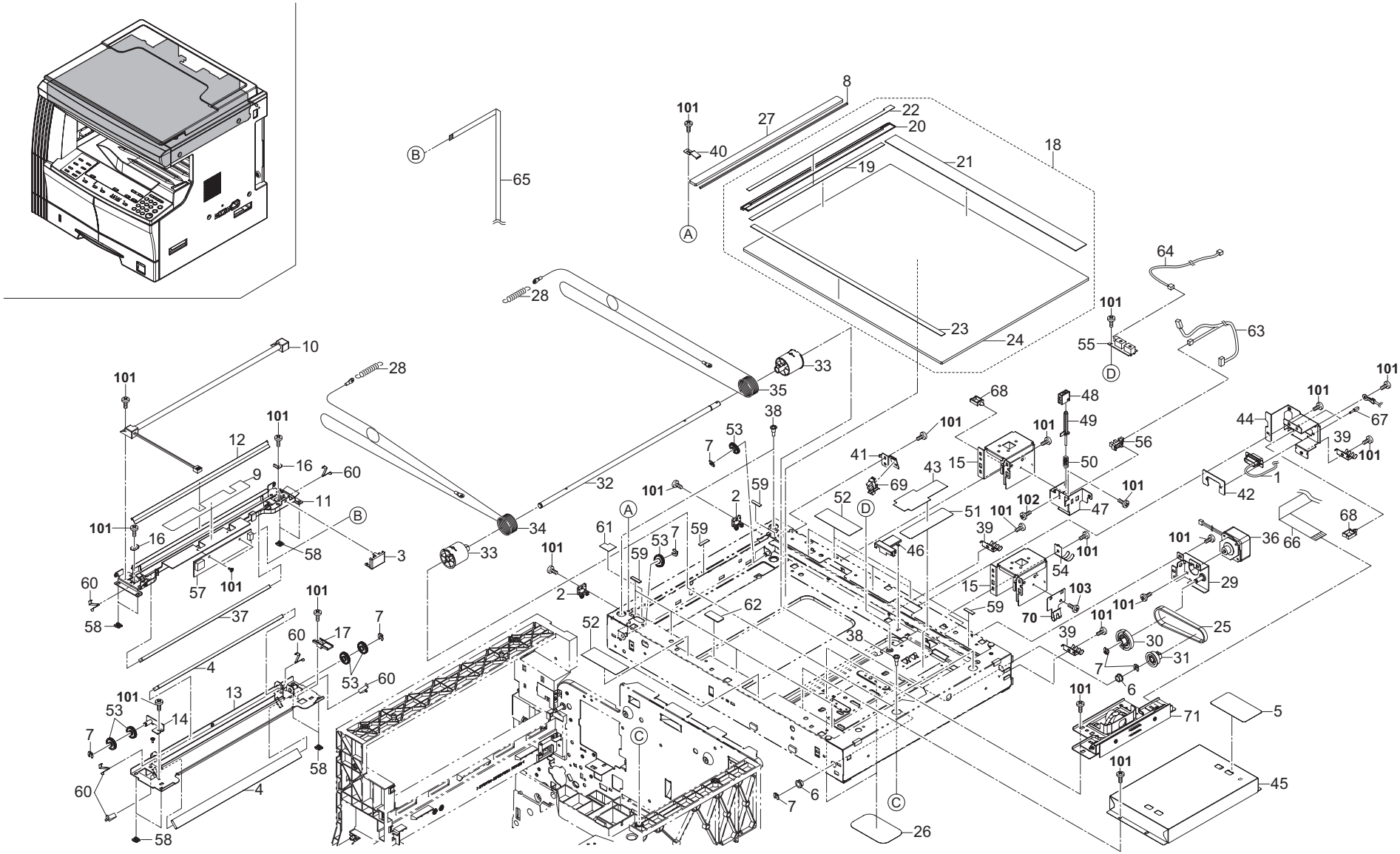
101
102
103
A
B
C
D

FIG. 8 Scanner Section

2C9-4.0/2FX-2.0

SP	Ref. No.	Part.No.	Alternative.	Description	Quantity 110	120	230	240
	1	2C927540		WIRE DP	1	1	1	1
	2	18512340		GUIDE,SCANNER WIRE	2	2	2	2
	3	2AV12080		GUIDE FFC1	1	1	1	1
⊙	4	2AV12160		MIRROR B	2	2	2	2
⊙	5	2C905160		LABEL GLASS CAUTION	1	1	1	1
⊙	6	2BC06510		BUSHING 8	2	2	2	2
⊙	7	2BC06980		STOPPER 5	7	7	7	7
⊙	8	2C912700		SPONGE ORIGINAL SIZE	1	1	1	1
	9	2C912180		FILM FRAME A	1	1	1	1
⊙	10	2C912090		LAMP SCANNER YG	1	1	1	1
	11	2C912100		MIRROR FRAME A	1	1	1	1
	12	2C912110		REFLECTOR SCANNER	1	1	1	1
	13	2C912120		MIRROR FRAME B	1	1	1	1
	14	2C912130		ADJUSTING PLATE B	1	1	1	1
	15	2C912141		MOUNT BASE DF HINGE LEFT	2	2	2	2
	16	2C912150		RETAINER WIRE	2	2	2	2
	17	2C912160		GUIDE FFC B	1	1	1	1
⊙	18	2C993170		PARTS,CONTACT GLASS,M(SP)	1		1	1
⊙	18	2C993180		PARTS,CONTACT GLASS,I(SP)		1		
	19	•2C912190		STANDARD PLATE SHADING	1	1	1	1
	20	•2C912200		LEFT SIZE INDICATOR	1	1	1	1
	21	•2C912210		REAR SIZE INDICATOR(M)	1		1	1
	21	•2C912460		REAR SIZE INDICATOR(I)		1		
	22	•2C912440		LABEL SIZE (METRIC)	1		1	1
	22	•2C912450		LABEL SIZE (INCH)		1		
	23	•2C912600		FRONT SIZE INDICATOR	1	1	1	1
	24	•2C912250		CONTACT GLASS	1	1	1	1
⊙	25	2C912260		BELT SCANNER	1	1	1	1
	26	2C912270		LOWER SEAL SCANNER	2	2	2	2
⊙	27	2C912280		CONTACT GLASS ADF	1	1	1	1
	28	302C912291	2C912291	SPRING SCANNER TENSION	2	2	2	2
	29	2C912300		MOTOR PLATE SCANNER	1	1	1	1
⊙	30	2C912310		GEAR Z18/39	1	1	1	1
⊙	31	2C912320		GEAR Z36	1	1	1	1
	32	2C912330		SHAFT MOTOR DRIVE	1	1	1	1
⊙	33	2C912340		DRUM PULLEY	2	2	2	2
	34	2C912350		FRONT WIRE SCANNER	1	1	1	1
	35	2C912360		REAR WIRE SCANNER	1	1	1	1
⊙	36	2C912380		MOTOR SCANNER	1	1	1	1
⊙	37	2C912390		MIRROR A	1	1	1	1
	38	302C912760	2C912760	PIN SCANNER	4	4	4	4
	39	2C912410		GROUND PLATE SCANNER	3	3	3	3
	40	2C912420		HOLDER GLASS DF	1	1	1	1
	41	2C912220		MOUNT PI	1	1	1	1
	42	2C912470		PLATE DSUB	1	1	1	1
	43	2C912480		HOLDER CCD WIRE	1	1	1	1
	44	2C912490		MOUNT DSUB	1	1	1	1
	45	2C912580		COVER ISU	1	1	1	1
	46	2C912230		HOLDER FFC A	1	1	1	1
	47	2C912610		MOUNT RELEASE SWITCH	1	1	1	1
	48	2C912620		GUIDE RELEASE SWITCH	1	1	1	1
	49	2C912640		SHAFT RELEASE SWITCH	1	1	1	1
	50	2C912650		SPRING RELEASE SWITCH	1	1	1	1
	51	2C912660		GUIDE CCD WIRE	1	1	1	1
	52	2C912670		SHIELD SCANNER FRAME	4	4	4	4
⊙	53	2C912680		PULLEY SCANNER	6	6	6	6
	54	2C912690		GROUND PLATE SCANNER B	1	1	1	1
⊙	55	2C927090		SENSOR ORIGINAL	1	1	1	1
⊙	56	2C927210		SENSOR 248NL1	1	1	1	1
⊙	57	2C928040		PCB LAMP INVERTER	1	1	1	1
	58	2DC12230		SLIDER SCANNER	8	8	8	8
⊙	59	29812291		CUSHION,CONTACT GLASS	9	9	9	9
	60	2BC12190		SPRING,MIRROR HOLDER	6	6	6	6
	61	2C912710		SHIELD SCANNER FRAME B	1	1	1	1
	62	2C912720		SHIELD BASE	1	1	1	1
	63	2C927550		WIRE SCANNER PI	1	1	1	1
	64	2C927560		WIRE ORIGINAL SIZE	1	1	1	1
⊙	65	2C927580		FFC INVERTER	1	1	1	1
⊙	66	2C927630		FFC CCD	1	1	1	1
	67	M0208010		SPACER,SFS-2.6S-B1WM(JST)	2	2	2	2
	68	M2109000	49513901	WIRE SADDLE,WS-1NS	2	2	2	2
⊙	69	5FNXGP1A73A++02	2DC27180	PT.SENSOR GP1A73AJ00	1	1	1	1
	70	2C912730		SHIELD WIRE PANEL	1	1	1	1
⊙	71	302C993250	2C993250	PARTS,ISU,SP	1	1	1	1
	101	5MBTPB3006TZ	B3023060	BIND T.T SCREW(+) / M3 X 6 S-ZMC S-T				
	102	B3313080		BINDING TAP-TITE SCREW M3X08				
	103	5MBTPB3006TW++R	B1A53060	BIND T.T SCREW(+) / M3 X 6 CRFREE S-T				

• Parts with "•" are component parts or sub-assemblies of the assembly appearing immediately above them.

• Parts with "⊙'" indicates the spare parts.

• Parts with "• •" are component parts or sub-assembly with "•" appearing immediately above them.

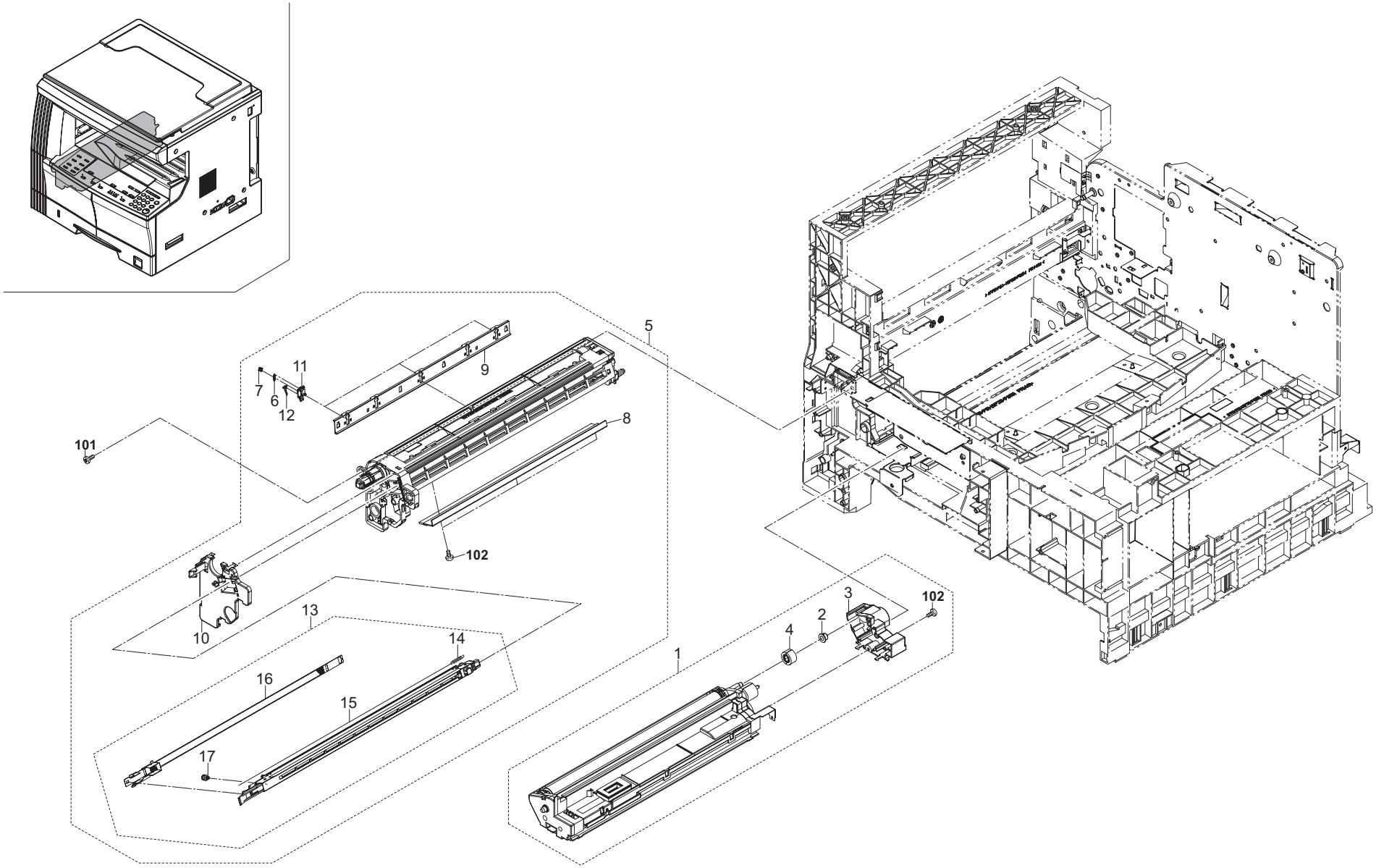
5
11
9
7
6
12
8
101
102
10
13
14
16
15
17
1
4
2
3
102

FIG. 9 Imaging Unit

SP	Ref. No.	Part.No.	Alternative.	Description	Quantity			
					110	120	230	240
⊙	1	302C993031	2C993031	PARTS,DV-410,SP	1	1	1	1
⊙	2	•5MVM176NN001	2BZ22230	BUSH GEAR Z26H 49515M0001A4	1	1	1	1
	3	•2C914080		REAR COVER DLP	1	1	1	1
	4	•2C914280		GEAR Z20H B	1	1	1	1
	5	2C982010		SET MK-410(OPTION)	1	1	1	1
	6	•2AR18280		SPRING,CLAW SEPARATION	3	3	3	3
	7	•2A118370		PULLEY,DRUM SEPARATION	3	3	3	3
	8	•2C918010		BLADE CLEANING	1	1	1	1
	9	•2C918040		LOWER SEAL CLEANING	1	1	1	1
	10	•2C918050		FRONT COVER CLEANING	1	1	1	1
	11	•2C918340		HOLDER CLAW	3	3	3	3
	12	•2C918370		CLAW SEPARATION	3	3	3	3
⊙	13	•2C993020		PARTS,MC-410,SP	1	1	1	1
	14	••5MMW141LX002	2BZ02300	SPRING WIRE	1	1	1	1
⊙	15	••302C968290	2C968290	CORONA WIRE MCH SP	1	1	1	1
	16	••2C910040		GRID	1	1	1	1
	17	••5MVT263NN001	33910230	PIN CHARGER	1	1	1	1

SP	Ref. No.	Part.No.	Alternative.	Description	Quantity			
					110	120	230	240
	101	B1304060		BINDING SCREW BVM4X6 (BLACK)				
	102	B3313080		BINDING TAP-TITE SCREW M3X08				

• Parts with "•" are component parts or sub-assemblies of the assembly appearing immediately above them.

• Parts with "⊙" indicates the spare parts.

• Parts with "• •" are component parts or sub-assembly with "•" appearing immediately above them.

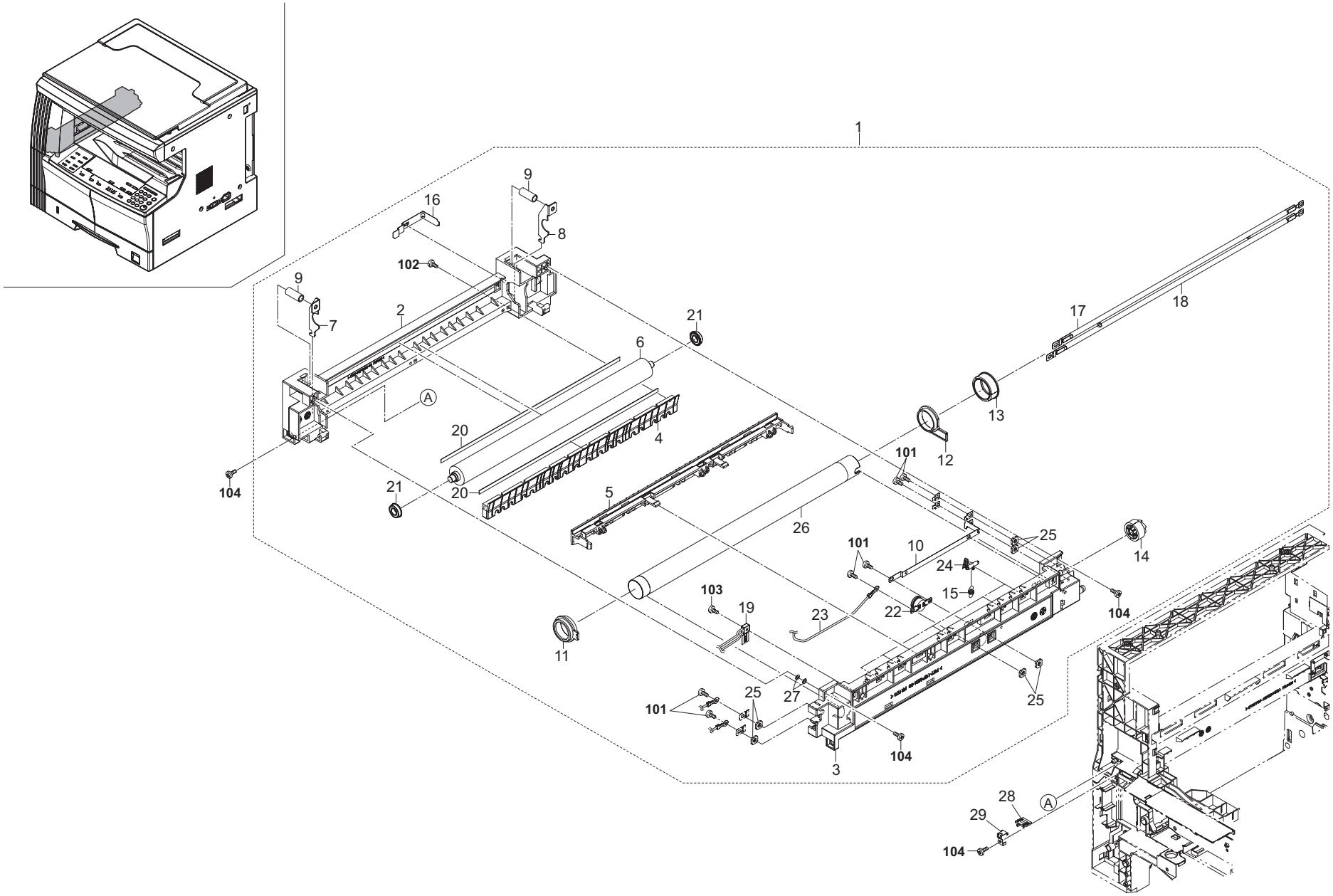
1
2
3
4
5
6
7
8
9
10
11
12
13
14
15
16
17
18
19
20
21
22
23
24
25
26
27
28
29
101
102
103
104
A

FIG. 10 Fuser Unit

SP	Ref. No.	Part.No.	Alternative.	Description	Quantity			
					110	120	230	240
⊙	1	302C993052	2C993052	PARTS,FK-410(A),SP		1		
⊙	1	302C993062	2C993062	PARTS,FK-410(E),SP			1	1
⊙	1	302C993270	2C993270	PARTS,FK-410(TW),SP	1			
	2	•302C920021	2C920021	LEFT FRAME FUSER	1	1	1	1
	3	•302C920011	2C920011	RIGHT FRAME FUSER	1	1	1	1
	4	•2C920040		FRONT GUIDE FUSER	1	1	1	1
	5	•2C920030		REAR GUIDE FUSER	1	1	1	1
⊙	6	•2C920060		ROLLER PRESS	1	1	1	1
	7	•2C920110		FRONT PRESSING PLATE	1	1	1	1
	8	•2C920120		REAR PRESSING PLATE	1	1	1	1
	9	•2C920130		SPRING PRESSURE	2	2	2	2
	10	•302C920141	2C920141	PLATE HEATER FUSER	1	1	1	1
⊙	11	•2C920150		FRONT BUSH HEAT ROLLER	1	1	1	1
⊙	12	•2C920160		REAR BUSH HEAT ROLLER	1	1	1	1
⊙	13	•2C920170		GEAR Z38 HEAT ROLLER	1	1	1	1
⊙	14	•2C920180		GEAR FUSER Z28	1	1	1	1
⊙	15	•2C920190		SPRING SEPARATOR	5	5	5	5
	16	•2C920200		GROUND PLATE PRESS	1	1	1	1
⊙	17	•2C920230		HEATER M120 FUSER		1		
⊙	17	•2C920250		HEATER M230 FUSER			1	1
⊙	17	•2C920410		HEATER M110 FUSER	1			
⊙	18	•2C920240		HEATER S120 FUSER		1		
⊙	18	•2C920260		HEATER S230 FUSER			1	1
⊙	18	•2C920420		HEATER S110 FUSER	1			
⊙	19	•2C920310		THERMISTOR FUSER	1	1	1	1
	20	•2C920320		SEAL DISCHAGER	2	2	2	2
⊙	21	•2C920330		BEARING PRESSURE	2	2	2	2
⊙	22	•2C920340		THERMOCUT 180 FUSER	1	1	1	1
	23	•2C927690		WIRE FUSER UNIT	1	1	1	1
⊙	24	•302FT20120	2FT20120	SEPARATOR ASSY	5	5	5	5
	25	•5MMS111SL002	2BY20050	NUT FUSER A	6	6	6	6
⊙	26	•302C920051	2C920051	ROLLER HEAT	1	1	1	1
⊙	27	•302C907660	2C907660	SPACER RIGHT GUIDE	2	2	2	2
⊙	28	302DA20010	2DA20010	SPACER FUSER UNIT	1	1	1	1
⊙	29	302DA20020	2DA20020	STOPPER FUSER SPACER	1	1	1	1

SP	Ref. No.	Part.No.	Alternative.	Description	Quantity			
					110	120	230	240
	101	B1303050		BINDING SCREW BVM3X5 (BLACK)				
	102	B3313080		BINDING TAP-TITE SCREW M3X08				
	103	5MBTPB3012PW++R	B1A63120	BIND T.T SCREW(+) / M3 X 12 CRFREE P-T				
	104	B3314100		BINDING TAP-TITE P BRONZE SCREW M4X				

• Parts with "•" are component parts or sub-assemblies of the assembly appearing immediately above them.

• Parts with "⊙'" indicates the spare parts.

• Parts with "• •" are component parts or sub-assembly with "•" appearing immediately above them.

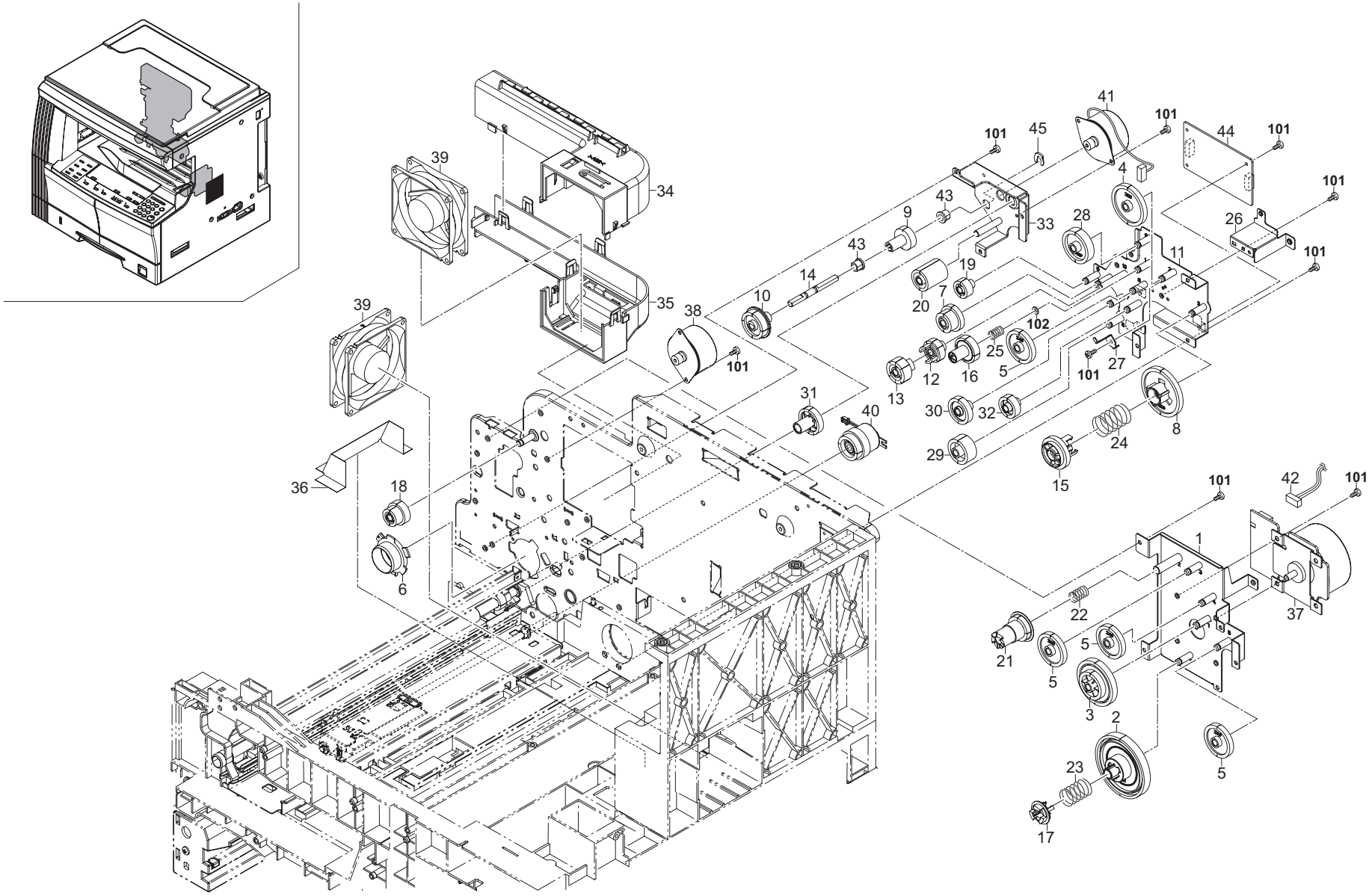
101
102
1
2
3
4
5
6
7
8
9
10
11
12
13
14
15
16
17
18
19
20
21
22
23
24
25
26
27
28
29
30
31
32
33
34
35
36
37
38
39
40
41
42
43
44
45

FIG. 11 Driving & Cooling Section

SP	Ref. No.	Part.No.	Alternative.	Description	Quantity 110	120	230	240
	1	2C922010		MOUNT DRIVE UNIT	1	1	1	1
⊙	2	2C922020		GEAR 122	1	1	1	1
⊙	3	2C922030		GEAR 88/34	1	1	1	1
⊙	4	2C922040		GEAR 50	1	1	1	1
⊙	5	2C922050		GEAR 40	4	4	4	4
⊙	6	2C922060		POSITIONING BUSH DRUM	1	1	1	1
⊙	7	2C922070		GEAR 30/23	1	1	1	1
⊙	8	2C922080		GEAR 60	1	1	1	1
⊙	9	2C922100		GEAR 25 DPX	1	1	1	1
⊙	10	2C922110		GEAR 32 DPX	1	1	1	1
	11	2C922130		MOUNT CONT DRIVE	1	1	1	1
⊙	12	2C922140		GEAR 25 DEV	1	1	1	1
⊙	13	2C922150		GEAR 26 DEV	1	1	1	1
⊙	14	2C922160		SHAFT DPX DRIVE	1	1	1	1
⊙	15	2C922170		COUPLING CONT P	1	1	1	1
⊙	16	2C922180		COUPLING CONT S	1	1	1	1
⊙	17	2C922190		COUPLING DRUM	1	1	1	1
⊙	18	2C922200		GEAR 43/20	1	1	1	1
⊙	19	2C922210		GEAR 20	1	1	1	1
⊙	20	2C922220		GEAR 25	1	1	1	1
⊙	21	2C922230		GEAR 29 FIX JOINT	1	1	1	1
	22	2C922240		SPRING FIX JOINT	1	1	1	1
	23	2C922250		SPRING DRUM COUPLING	1	1	1	1
	24	2C922260		SPRING CONT P	1	1	1	1
	25	2C922270		SPRING CONT S	1	1	1	1
	26	2C922280		MOUNT HV PCB	1	1	1	1
	27	2C922290		HOLDER GEAR	1	1	1	1
⊙	28	2C922300		GEAR 40 FIXJOINT	1	1	1	1
⊙	29	2C922330		GEAR 30 PF	1	1	1	1
⊙	30	2C922340		GEAR 31	1	1	1	1
⊙	31	2C922350		GEAR 51 REG	1	1	1	1
⊙	32	2C922360		GEAR 25 PF	1	1	1	1
	33	2C922370		MOUNT REG MOTOR	1	1	1	1
	34	2C923010		UPPER DUCT	1	1	1	1
	35	2C923020		LOWER DUCT	1	1	1	1
	36	2C923030		FILM COOLING	1	1	1	1
⊙	37	2C927010		MOTOR MAIN	1	1	1	1
⊙	38	2C927020		MOTOR EJECT	1	1	1	1
⊙	39	2C927070		FAN COOLING 80-25	2	2	2	2
⊙	40	2C927190		CLUTCH FEED	1	1	1	1
⊙	41	2C927220		MOTOR REGISTRATION	1	1	1	1
	42	2C927760		WIRE MAIN MOTOR	1	1	1	1
⊙	43	3CY07080		BUSHING 6	2	2	2	2
⊙	44	302C901192	2C901192	PCB REGISTRATION ASSY	1	1	1	1
⊙	45	5MVX111DN003	2A806250	RING STOPPER	1	1	1	1

SP	Ref. No.	Part.No.	Alternative.	Description	Quantity 110	120	230	240
	101	5MBTPB3006TZ	B3023060	BIND T.T SCREW(+) / M3 X 6 S-ZMC S-T				
	102	C2893140		SHIM 6.2X14X0.25T				

• Parts with "•" are component parts or sub-assemblies of the assembly appearing immediately above them.

• Parts with "⊙'" indicates the spare parts.

• Parts with "• •" are component parts or sub-assembly with "•" appearing immediately above them.

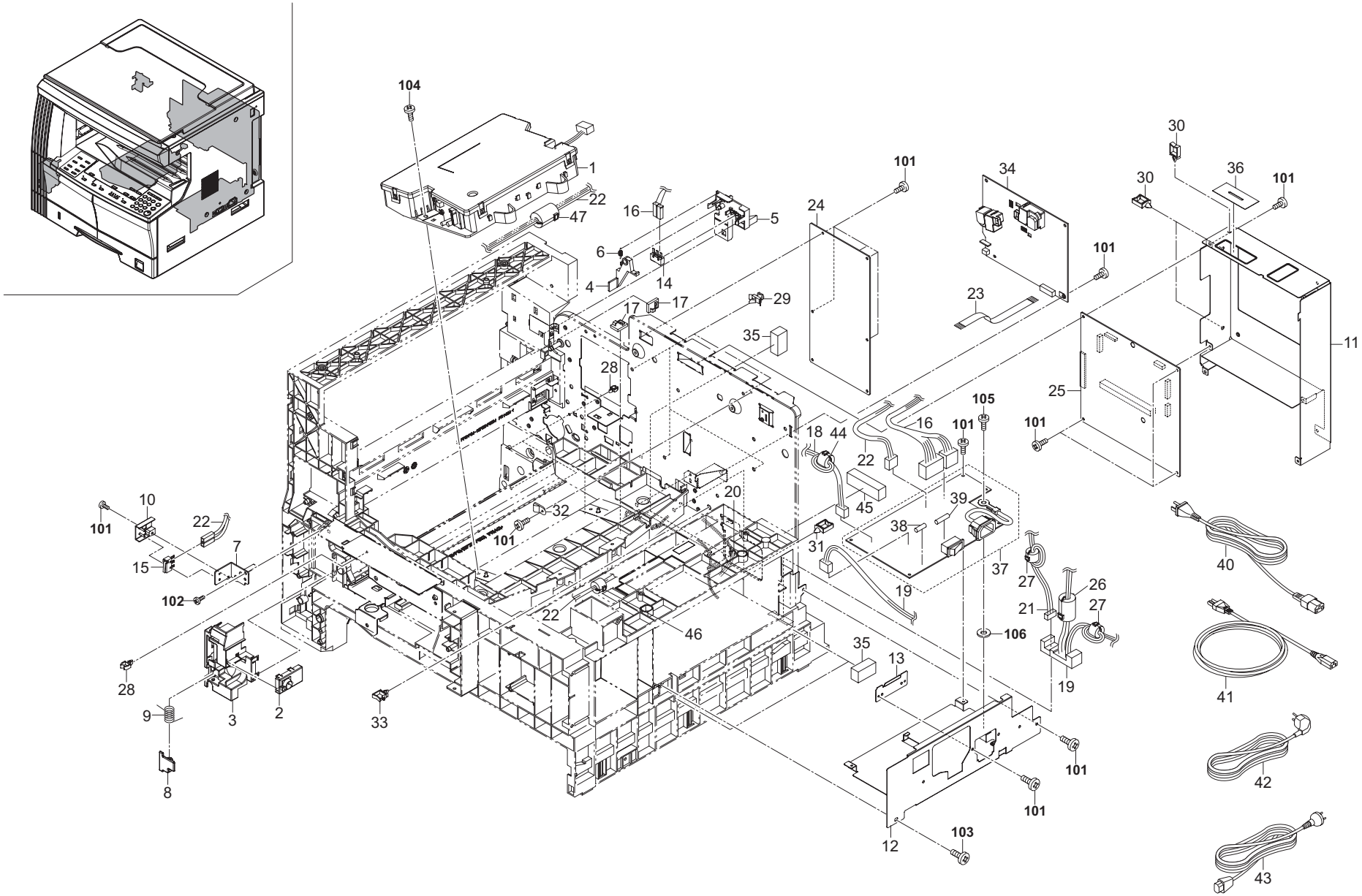
104
1
22
47
16
5
6
4
14
17
17
29
35
28
24
101
34
30
30
36
101
101
23
11
25
105
101
16
101
18
44
22
45
39
38
31
37
19
27
26
21
27
106
19
40
41
42
43
10
101
22
7
15
102
32
101
20
22
46
35
13
28
9
3
2
33
8
101
101
12
103

FIG. 12 Electrical Components

2C9-4.0/2FX-2.0

SP	Ref. No.	Part.No.	Alternative.	Description	Quantity			
					110	120	230	240
⊙	1	302C993092	2C993092	PARTS,LSU ASS'Y,SP	1	1	1	1
⊙	2	2C901170		DISPOSAL SENSOR ASSY	1	1	1	1
	3	2C918400		HOLDER SENSOR B	1	1	1	1
	4	2C904300		ARM INTERLOCK SW	1	1	1	1
	5	2C904310		MOUNT INTERLOCK SW	1	1	1	1
	6	2C904340		SPRING LEFT INTERLOCK	1	1	1	1
	7	2C916150		PIN CONVEYING HOOK	1	1	1	1
	8	2C918350		DETECTION PLATE	1	1	1	1
	9	2C918360		SPRING DETECTION	1	1	1	1
	10	2C926070		HOLDER INTERLOCK SW	1	1	1	1
	11	2C926500		SHIELD MAIN	1	1	1	1
	12	2C926510		MOUNT POWER SOURCE	1	1	1	1
	13	2C926520		PLATE INLET	1	1	1	1
⊙	14	2C927170		SWITCH INTERLOCK L	1	1	1	1
⊙	15	2C927180		SWITCH INTERLOCK F	1	1	1	1
	16	2C927510		WIRE ENGINE	1	1	1	1
	17	M2105890		CLAMP,CKN-05(KITAGAWA)	3	3	3	3
	18	2C927600		WIRE FUSER	1	1	1	1
	19	2C927610		WIRE DESK POWER	1	1	1	1
	20	M2107240		BAND,KI-100(KITAGAWA)	1	1	1	1
	21	2C927660		WIRE DESK	1	1	1	1
	22	2C927680		WIRE FRONT SW	1	1	1	1
⊙	23	2C927740		FFC HVU	1	1	1	1
⊙	24	302C968185	2C968185	PCB ENGINE ASSY SP (16ppm)	1	1	1	1
⊙	24	302FX68013	2FX68013	PCB ENGINE ASSY SP (20ppm)	1	1	1	1
⊙	25	2C968194		PCB MAIN ASSY SP	1	1	1	1
	26	2C927230		CORE SFT-72SNB-026K	1	1	1	1
	27	2A627940		CORE 10-20X10	2	2	2	2
	28	M2105740		MINIATURE CLAMP,UAMS-05S-2	4	4	4	4
	29	M2108130		SPACER,KGPS-4S	3	3	3	3
	30	M2109000	49513901	WIRE SADDLE,WS-1NS	3	3	3	3
	31	M2109020	49829401	WIRE SADDLE,WS-2WS	1	1	1	1
	32	M7005030		CLAMP,EMT-5N(TAKEUCHI)	1	1	1	1
	33	M70A5020		CLAMP,FCC-125EM513(TAKEUCHI)	1	1	1	1
⊙	34	2C928051		PCB HIGH VOLTAGE	1	1	1	1
	35	2BL14480		SEAL WIRE	4	4	4	4
	36	2C926160		SHIELD CCD WIRE	1	1	1	1
⊙	37	2C928080		PCB LVU 100	1	1		
⊙	37	2C928090		PCB LVU 200			1	1
⊙	38	•M5561000		FUSE,CES6-N1(SOC)	1	1		
⊙	38	•M1658030		FUSE,215008(LITTEL-FUSE)			1	1
⊙	39	•M6056000		FUSE,19181-T6.3H(WICKMANN)			1	1
	40	3065027601	65027601	POWER CORD 110	1			
	41	19527400		POWER CORD(120)		1		
	42	2AN27360		POWER CORD(230)			1	
	43	3029927232	29927232	POWER CODE AS(240)				1
	44	2A627930		CORE 11-25X14			1	1
	45	2C927250		GASKET SHIELD 8X10X45			1	1
	46	2A627940		CORE 10-20X10			1	1
	47	2AV27440		CORE 15-26X13	1	1	1	1

SP	Ref. No.	Part.No.	Alternative.	Description	Quantity			
					110	120	230	240
	101	5MBTPB3006TZ	B3023060	BIND T.T SCREW(+) / M3 X 6 S-ZMC S-T				
	102	B3313080		BINDING TAP-TITE SCREW M3X08				
	103	B3314100		BINDING TAP-TITE P BRONZE SCREW M4X				
	104	B1A64120		+BIND TAP-TITE P SCREW M4X12				
	105	B9B04080		+-GROUNDING SCREW M4X8				
	106	5MBWG40854SZ	C4204000	OT LOCK WASHER / M4X8.5X0.4T S-ZMC				

• Parts with "•" are component parts or sub-assemblies of the assembly appearing immediately above them.

• Parts with "⊙'" indicates the spare parts.

• Parts with "• •" are component parts or sub-assembly with "•" appearing immediately above them.

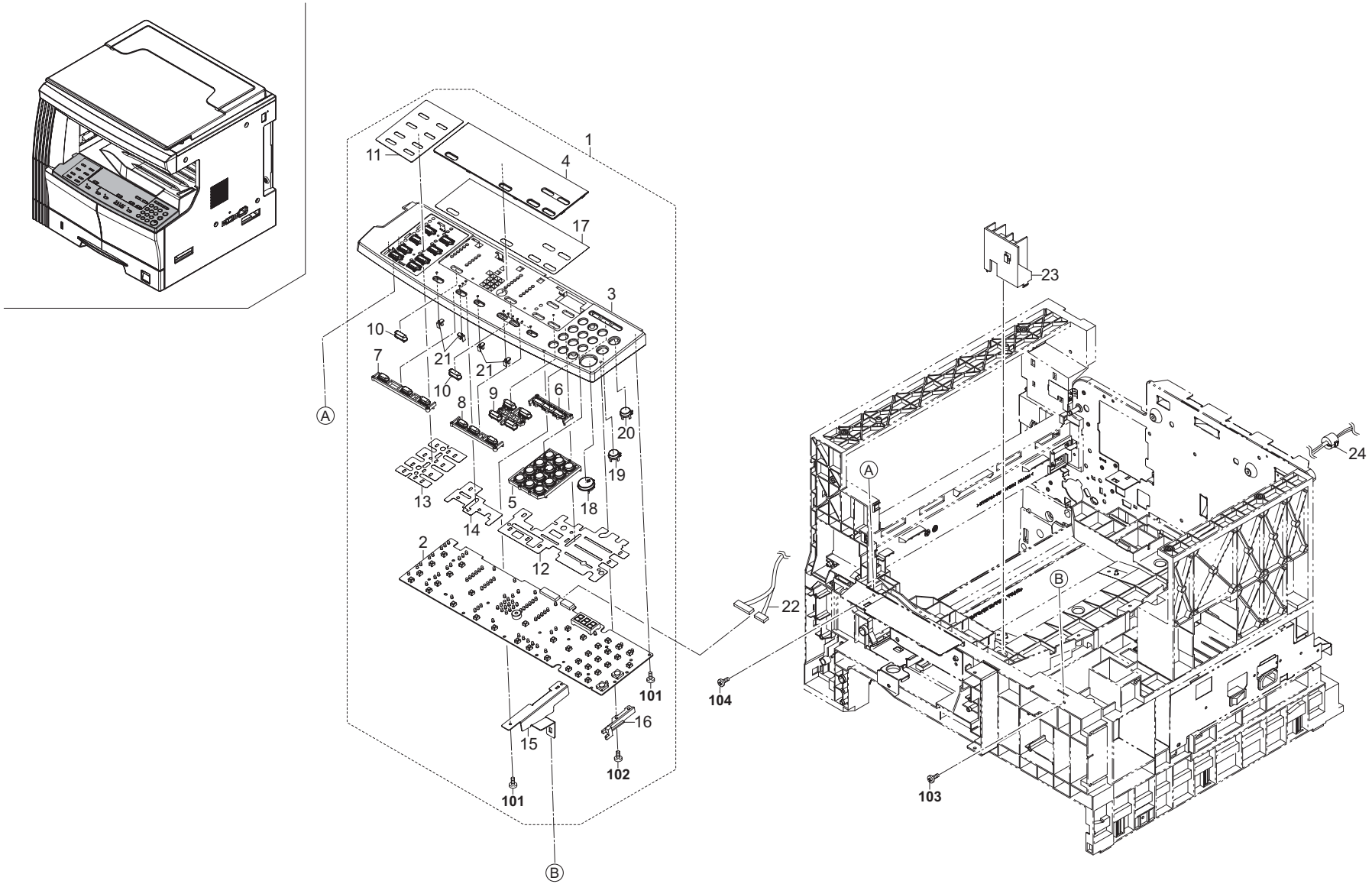
1
11
4
17
3
10
7
21
21
10
9
6
8
20
19
13
18
5
14
2
12
101
16
15
102
101
Ⓑ
Ⓐ
23
24
Ⓐ
Ⓑ
22
104
103

FIG. 13 Operation Unit

SP	Ref. No.	Part.No.	Alternative.	Description	Quantity			
					110	120	230	240
⊙	1	2C993081		PARTS,OPE ASS'Y(I)SP		1		
⊙	1	2C993101		PARTS,OPE ASS'Y(M)SP			1	1
⊙	1	302C993310	2C993310	PARTS,OPE ASS'Y(RS)SP	1			
⊙	2	•2C901040		PCB OPERATION ASSY	1	1	1	1
⊙	3	•2C925100		COVER OPERATION E		1	1	1
⊙	3	•2C925220		COVER OPERATION(RS)	1			
⊙	4	•2C925330		CENTER OPE COVER	1	1	1	1
⊙	5	•2C925030		KEY OPERATION 10	1	1	1	1
⊙	6	•2C925040		KEY SAVER	1	1	1	1
⊙	7	•2C925050		KEY PROGRAM	1	1	1	1
⊙	8	•2C925060		KEY EXPOSURE	1	1	1	1
⊙	9	•2C925070		KEY ZOOM	1	1	1	1
⊙	10	•2C925080		KEY SIZE	2	2	2	2
⊙	11	•2C925120		LEFT OPE SHEET I		1	1	1
⊙	11	•2C925240		LEFT OPE SHEET(RS)	1			
	12	•2C925150		RIGHT DUST SHIELD	1	1	1	1
	13	•2C925160		LEFT DUST SHIELD	1	1	1	1
	14	•2C925170		CENTER DUST SHIELD	1	1	1	1
	15	•2C925201		MOUNT OPERATION R	1	1	1	1
	16	•2C925210		SPACER OPE PCB	1	1	1	1
	17	•2C925260		CENTER OPE SHEET I		1		
	17	•2C925270		CENTER OPE SHEET M			1	1
	17	•2C925280		CENTER OPE SHEET(RS)	1			
⊙	18	•2DC25052		KEY PRINT	1	1	1	1
⊙	19	•2DC25060		KEY STOP	1	1	1	1
⊙	20	•2DC25070		KEY RESET	1	1	1	1
⊙	21	•2C925320		LENS OPERATION COVER	11	11	11	11
	22	2C927640		WIRE PANEL	1	1	1	1
	23	2C925180		RETAINER OPERATION	1	1	1	1
	24	2A627940		CORE 10-20X10	1	1	1	1

SP	Ref. No.	Part.No.	Alternative.	Description	Quantity			
					110	120	230	240
	101	B3313080		BINDING TAP-TITE SCREW M3X08				
	102	5MBTPB3012PW++R	B1A63120	BIND T.T SCREW(+) / M3 X 12 CRFREE P-T				
	103	B3314100		BINDING TAP-TITE P BRONZE SCREW M4X				
	104	BAB54100		+TP TAP-TITE S SCREW M4X10				

• Parts with "•" are component parts or sub-assemblies of the assembly appearing immediately above them.

• Parts with "⊙'" indicates the spare parts.

• Parts with "• •" are component parts or sub-assembly with "•" appearing immediately above them.

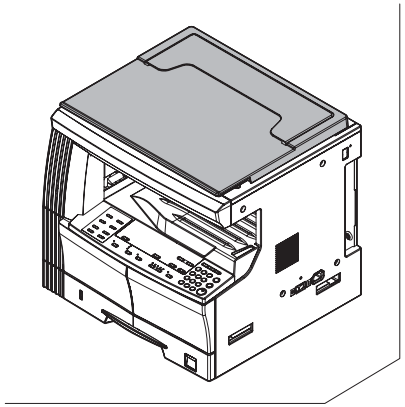

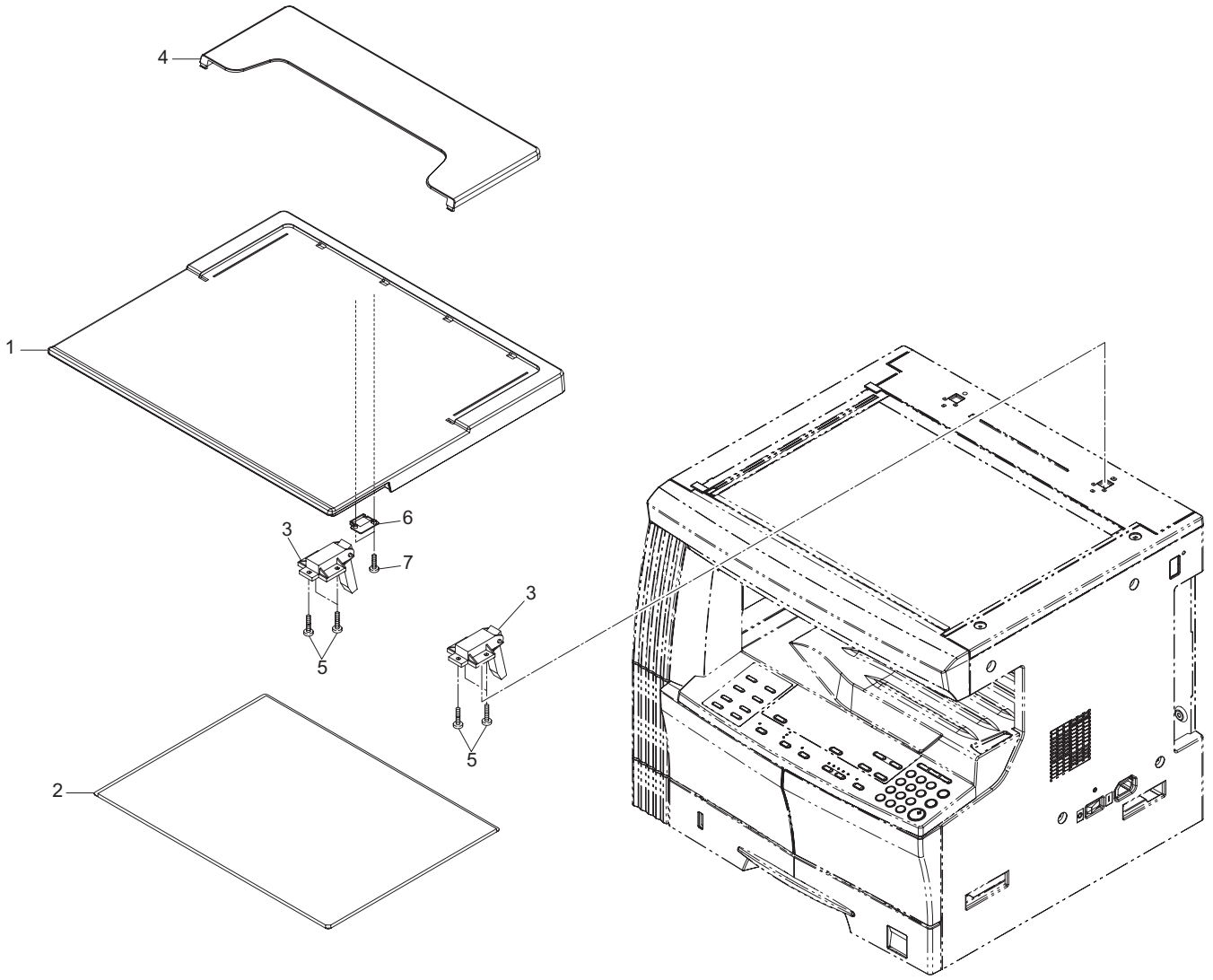

*120V, 230V : OPTION

FIG. 14 Original Holder

SP	Ref. No.	Part.No.	Alternative.	Description	Quantity			
					110	120	230	240
		2CX82010		SET,PLATEN COVER TYPE D (OPTION)	1	1*	1*	1
	1	•2A612800		COVER,PLATEN	1	1*	1*	1
	2	•2A612810		MAT,ORIGINAL HOLDER	1	1*	1*	1
	3	•2A612820		HINGE,ORIGINAL HOLDER	2	2*	2*	2
	4	•60904280		ORIGINAL POCKET	1	1*	1*	1
	5	•5MBTPB4010PW++R	B1A64100	BIND T.T SCREW(+) / M4 X 10 CRFREE P-T	6	6*	6*	6
	6	•2C912630		STOPPER RELEASE SWITCH	1	1*	1*	1
	7	•5MBTPB3012PW++R	B1A63120	BIND T.T SCREW(+) / M3 X 12 CRFREE P-T	2	2*	2*	2

• Parts with "•" are component parts or sub-assemblies of the assembly appearing immediately above them.

• Parts with "⊙'" indicates the spare parts.

• Parts with "• •" are component parts or sub-assembly with "•" appearing immediately above them.

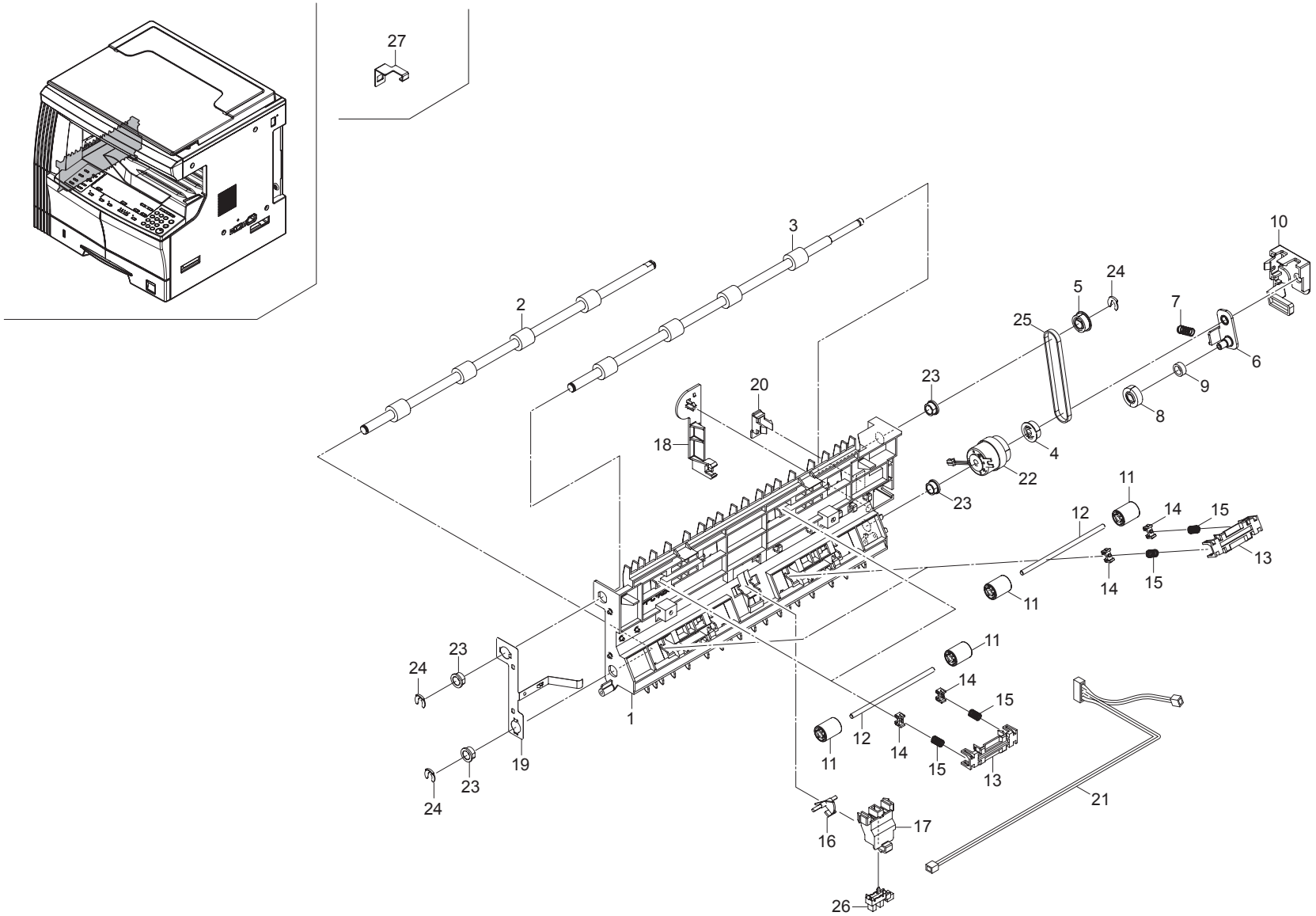
27
3
2
10
24
5
7
25
6
23
20
9
8
18
4
22
23
11
12
14
15
13
14
15
11
11
23
24
14
15
1
12
14
11
15
13
19
23
24
21
17
16
26

FIG. 15 Option I (DU-410)

SP	Ref. No.	Part.No.	Alternative.	Description	Quantity			
					110	120	230	240
	1	3HY07010		FRAME DUPLEX	1	1	1	1
⊙	2	3HY07020		ROLLER DUPLEX A	1	1	1	1
⊙	3	3HY07030		ROLLER DUPLEX B	1	1	1	1
⊙	4	3HY07040		PULLEY 26-6 DUPLEX	1	1	1	1
⊙	5	3HY07050		PULLEY 26-8 DUPLEX	1	1	1	1
	6	3HY07060		JUNCTION PLATE DUPLEX	1	1	1	1
	7	3HY07070		SPRING JUNCTION DUPLEX	1	1	1	1
⊙	8	3HY07090		GEAR 21 DUPLEX	1	1	1	1
⊙	9	3HY07100		PULLEY IDLE DUPLEX	1	1	1	1
	10	3HY07110		RETAINER DUPLEX	1	1	1	1
⊙	11	3HY07120		PULLEY 15 DUPLEX	8	8	8	8
	12	3HY07130		SHAFT 4 DUPLEX	4	4	4	4
	13	3HY07140		HOLDER DUPLEX SPRING	4	4	4	4
⊙	14	3HY07150		BUSHING DUPLEX ROLLER	8	8	8	8
	15	3HY07160		SPRING DUPLEX PULLEY	8	8	8	8
⊙	16	3HY07170		ACTUATOR DUPLEX	1	1	1	1
	17	3HY07180		RETAINER ACTUATOR	1	1	1	1
	18	3HY07190		PROTECTING PLATE WIRE	1	1	1	1
	19	3HY07200		GROUND PLATE DUPLEX	1	1	1	1
	20	3HY07210		LID DUPLEX	1	1	1	1
	21	3HY27010		WIRE DUPLEX	1	1	1	1
⊙	22	3HY27020		CLUTCH DU	1	1	1	1
⊙	23	2BC06510		BUSHING 8	4	4	4	4
⊙	24	2BC06910		STOPPER 6	3	3	3	3
⊙	25	2C921340		BELT EXIT	1	1	1	1
⊙	26	2C927210		SENSOR 248NL1	1	1	1	1
	27	3HY07220		PLATE LOCK DUPLEX	1	1	1	1

• Parts with "•" are component parts or sub-assemblies of the assembly appearing immediately above them.

• Parts with "⊙'" indicates the spare parts.

• Parts with "• •" are component parts or sub-assembly with "•" appearing immediately above them.

KEY COUNTER

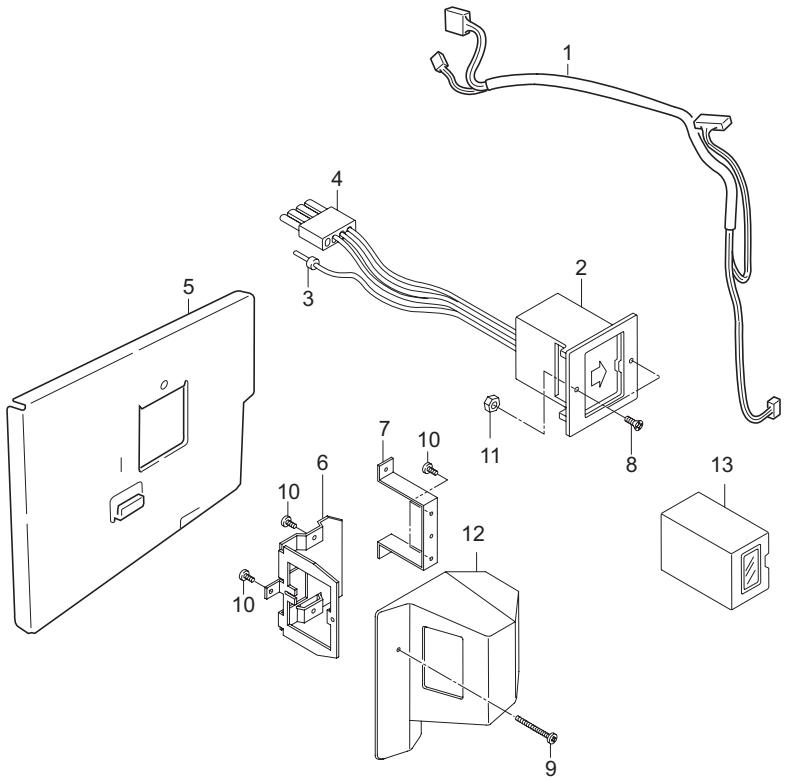

TOOL

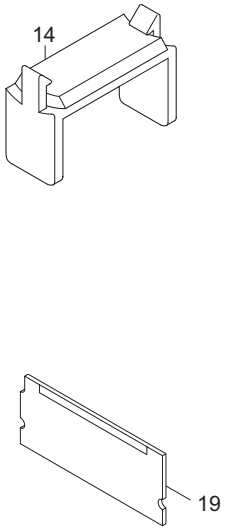

HEATER

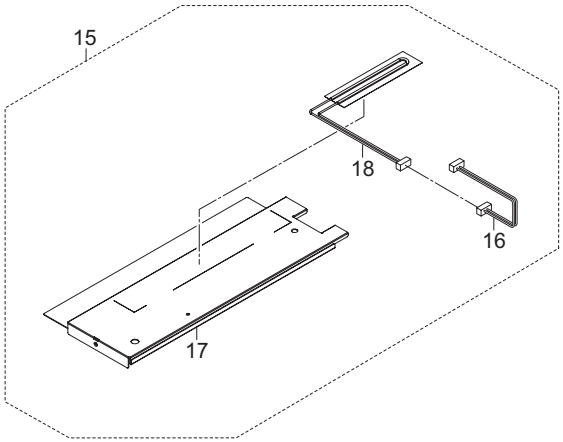

FIG. 16 Option II

SP	Ref. No.	Part.No.	Alternative.	Description	Quantity			
					110	120	230	240
⊙	1	2C960110		WIRE KEY COUNTER	1	1	1	1
⊙	2	29236240	41529210	SOCKET ASS'Y,KEY COUNTER	1	1	1	1
	3	•J0220040		PLUG EL 4P,ELP-04V	1	1	1	1
	4	•25055010	41525016	SOCKET,KEY COUNTER	2	2	2	2
⊙	5	2C960100		MOUNT KEY COUNTER	1	1	1	1
⊙	6	66060030		RETAINER,KEY COUNTER	1	1	1	1
⊙	7	66060040		MOUNT,KEY COUNTER	1	1	1	1
⊙	8	B2303060		COUNTER-SUNK HEAD SCREW BFHM3X6	2	2	2	2
⊙	9	B0004350		ROUND HEAD SCREW M4X35	1	1	1	1
⊙	10	B4304060		TRIPLE SCREW M4X6 (BLACK)	4	4	4	4
⊙	11	C2303000		NUT BNM3 (BLACK)	1	1	1	1
⊙	12	2A360010		COVER,KEY COUNTER	1	1	1	1
⊙	13	82142540		KEY COUNTER	1	1	1	1
⊙	14	35968110		STOPPER WIRE ASS'Y SP	2	2	2	2
⊙	15	2C993190		PARTS,DEH.ASSY120,SP	1	1		
⊙	15	2C993200		PARTS,DEH.ASSY240,SP			1	1
	16	•2C927780		WIRE DEHUMIDIFIER	1	1	1	1
	17	•2C907520		PLATE HEATER J	1	1	1	1
⊙	18	•2AV60100		HEATER,CASSETTE(120)	1	1		
⊙	18	•2AV60110		HEATER,CASSETTE(240)			1	1
⊙	19	2C968134		PCB FLASH DIMM ASSY	1	1	1	1

• Parts with "•" are component parts or sub-assemblies of the assembly appearing immediately above them.

• Parts with "⊙'" indicates the spare parts.

• Parts with "• •" are component parts or sub-assembly with "•" appearing immediately above them.

SP	Part.No.	Alternative.	Description	Fig.No.
	18512340		GUIDE,SCANNER WIRE	8
	19507050		LEVER,CASSETTE BASE RELEASE	3
	19527400		POWER CORD(120)	12
	25055010	41525016	SOCKET,KEY COUNTER	16
⊙	29236240	41529210	SOCKET ASS'Y,KEY COUNTER	16
⊙	29807100		GEAR 16,BYPASS	5
⊙	29812291		CUSHION,CONTACT GLASS	8
	3029927232	29927232	POWER CODE AS(240)	12
	3065027601	65027601	POWER CORD 110	12
⊙	34821210		STATIC ELIMINATOR B,EJECT	7
⊙	34907141		GEAR 18,CASSETTE	3
⊙	35968110		STOPPER WIRE ASS'Y SP	16
	60804120		MAGNET CATCH	1
	60904280		ORIGINAL POCKET	14
⊙	66060030		RETAINER,KEY COUNTER	16
⊙	66060040		MOUNT,KEY COUNTER	16
⊙	76508130		SPRING BELT GUIDE ROLLER	3
⊙	82142540		KEY COUNTER	16
	2A118370		PULLEY,DRUM SEPARATION	2,9
⊙	2A360010		COVER,KEY COUNTER	16
	2A612800		COVER,PLATEN	14
	2A612810		MAT,ORIGINAL HOLDER	14
	2A612820		HINGE,ORIGINAL HOLDER	14
	2A627930		CORE 11-25X14	12
	2A627940		CORE 10-20X10	12,13
	2AN27360		POWER CORD(230)	12
⊙	2AR07220		PULLEY,PAPER FEED	5
⊙	2AR07230		PULLEY,SEPARATION	5
⊙	2AR07240		PULLEY,LEADING FEED	5
	2AR18280		SPRING,CLAW SEPARATION	9
	2AV12080		GUIDE FFC1	8
⊙	2AV12160		MIRROR B	8
	2AV27440		CORE 15-26X13	12
⊙	2AV60100		HEATER,CASSETTE(120)	16
⊙	2AV60110		HEATER,CASSETTE(240)	16
	2AV73580		LABEL,TONER DISPOSAL TANK HK	1
⊙	2BC06510		BUSHING 8	5,6,8,15
⊙	2BC06910		STOPPER 6	4,5,6,15
⊙	2BC06980		STOPPER 5	4,5,6,7,8
	2BC12190		SPRING,MIRROR HOLDER	8
⊙	2BL05070		LABEL SEP CLEANING	1
	2BL14480		SEAL WIRE	12
	2BL16220	5AAVBRUSH036	BRUSH CLEANER ASSY	1
⊙	2BL17030		COLLAR TRANS ROLLER	4
	2BL21260		SPRING ACTUATOR L	7
⊙	2C901040		PCB OPERATION ASSY	13
⊙	2C901050		PCB MPF SIZE ASSY	6
⊙	2C901060		PCB EJECT SW ASSY	7
⊙	2C901100		PCB CASSETTE ASSY	5
⊙	2C901170		DISPOSAL SENSOR ASSY	12

SP	Part.No.	Alternative.	Description	Fig.No.
⊙	2C901180		CONT SENSOR ASSY	2
	2C902070		BASE RUBBER	2
	2C902080		SPRING DEV PUSH	2
	2C902100		MOUNT REAR COVER	2
	2C902110		MOUNT FRONT COVER	2
	2C902120		PANEL FRONT	2
	2C902130		MOUNT CONT PCB	2
	2C902140		HINGE FRONT COVER	1
	2C902151		MOUNT CONT LEVER	2
	2C902160		RAIL DLP	2
	2C902170		LEVER DEV PUSH	2
⊙	2C902180		FILM BASE	2
	2C902200		RAIL CLEANING	2
	2C902230		FILM BASE L	2
	2C902240		FILM BASE B	2
	2C902260		GROUND PLATE FRAME	2
	2C902270		SPACER BASE	2
	2C902280		HOLDER PULLEY	2
	2C902520		COLLAR LEVER CONT.	2
⊙	2C902540		LEVER LOCK CONT.	2
	2C902590		SPRING DEV PUSH F	2
⊙	2C904010		FRONT RIGHT COVER	1
⊙	2C904041		RIGHT COVER	1
⊙	2C904050		LEFT COVER	7
⊙	2C904060		LEFT LOW COVER	1
⊙	2C904070		UPPER FRONT COVER	1
⊙	2C904080		FRONT SIDE COVER UP	1
⊙	2C904090		FRONT TOP COVER	1
⊙	2C904100		RIGHT TOP COVER	1
⊙	2C904110		LEFT TOP COVER	1
⊙	2C904120		REAR TOP COVER	1
⊙	2C904130		FRONT SIDE COVER MID	1
⊙	2C904140		FRONT SIDE COVER LOW	1
⊙	2C904150		INNER REAR COVER	1
⊙	2C904160		INNER LEFT COVER	1
⊙	2C904170		REAR COVER	1
⊙	2C904180		LEFT FRONT COVER	1
⊙	2C904190		LEFT REAR COVER	1
⊙	2C904200		LEFT MIDDLE COVER	1
	2C904210		STOPPER LEFT COVER F	7
	2C904220		STOPPER LEFT COVER R	7
	2C904231		STRAP LEFT COVER A	7
	2C904241		STRAP LEFT COVER B	7
	2C904250		SHAFT HOOK	7
	2C904260		HOOK LEFT COVER F	7
	2C904270		HOOK LEFT COVER R	7
	2C904280		JUNCTION PLATE HOOK	7
	2C904290		PLATE FRONT COVER	1
	2C904300		ARM INTERLOCK SW	12
	2C904310		MOUNT INTERLOCK SW	12

• Parts with "⊙'" indicates the spare parts.

SP	Part.No.	Alternative.	Description	Fig.No.
	2C904340		SPRING LEFT INTERLOCK	12
	2C904350		SPRING LEFT HOOK	7
	2C904360		STRAP LEFT COVER C	6
	2C904390		PLATE LEFT SW	7
⊙	2C904410		COVER DSUB	1
	2C904430		PLATE LEFT HOOK	7
	2C904440		SPRING LEFT COVER	7
⊙	2C904470		FRONT LEFT COVER(K)	1
⊙	2C904480		FILM FRONT COVER	1
	2C904490		PLATE FRONT STRAP	6
	2C904510		SPONGE COVER	1
	2C904550		CUT WASHER 5	7
	2C905071		LABEL CONT SET	2
⊙	2C905080		LABEL CONVEYING JAM	1
⊙	2C905090		LABEL HIGH TEMP	7
⊙	2C905100		LABEL RADIATION	1
	2C905110		LABEL DRUM CAUTION	2
⊙	2C905160		LABEL GLASS CAUTION	8
⊙	2C905170		LABEL BYPASS TABLE	7
	2C905180		LABEL ERROR CODE J	1
	2C905190		LABEL ERROR CODE C	1
	2C905200		LABEL CASSETTE LGR	3
⊙	2C905220		LABEL LEFT COVER	1
⊙	2C905230		SHEET CASSETTE SIZE(C)	3
⊙	2C905240		SHEET CASSETTE SIZE(I)	3
⊙	2C905270		LABEL BYPASS JAM	7
⊙	2C906010		COVER BYPASS	6
⊙	2C906020		TABLE BYPASS	6
⊙	2C906030		FRONT CURSOR BYPASS	6
⊙	2C906040		REAR CURSOR BYPASS	6
⊙	2C906050		BYPASS SUB TABLE A	6
⊙	2C906060		BYPASS SUB TABLE B	6
⊙	2C906080		GEAR 18 BYPASS	6
	2C906090		TERMINAL PAPER SIZE	6
	2C906101		LIFT PLATE BYPASS	6
	2C906110		SPRING BYPASS LIFT	6
⊙	2C906120		SHEET BYPASS LIFT	6
⊙	2C906130		STOPPER BYPASS	6
	2C906171		SHAFT BYPASS	6
⊙	2C906190		CAM BYPASS	6
⊙	2C906200		CLUTCH BYPASS FEED	6
	2C906210		BYPASS PAPER GUIDE F	6
	2C906220		BYPASS PAPER GUIDE R	6
	2C906241		MOUNT LIFT PLATE	6
	2C906250		GROUND PLATE BYPASS	6
	2C906280		GROUND PLATE LIFT	6
	2C906290		SHEET BYPASS GUIDE	6
⊙	2C906300		SEAL BYPASS GUIDE	6
	2C906310		SEAL BYPASS LIFT	6
	2C907010		CASSETTE	3

SP	Part.No.	Alternative.	Description	Fig.No.
	2C907020		BOTTOM CASSETTE	3
⊙	2C907030		REAR CURSOR C	3
⊙	2C907040		FRONT CURSOR C	3
	2C907050		PLATE SIDE SW	3
	2C907060		PLATE SIZE DETECTION	5
	2C907070		LEVER INDICATOR	3
	2C907080		LEFT RAIL CASSETTE	5
⊙	2C907090		SPRING SIDE SW	3
⊙	2C907100		STOPPER CASSETTE	5
	2C907110		MARKER INDICATOR	3
⊙	2C907120		ACTUATOR EMPTY	5
⊙	2C907130		GEAR Z15 REGIST	5
⊙	2C907140		PAD CASSETTE	3
⊙	2C907150		SPRING BOTTOM	3
	2C907180		RIGHT ROLL REGIST	5
⊙	2C907190		RIGHT CURSOR A	3
	2C907200		STOPPER ARM	3
	2C907210		SHAFT PAPER FEED	5
	2C907230		SHAFT PICK UP B	5
	2C907240		PLATE PICK UP B	5
	2C907250		HOLDER RETARD	5
⊙	2C907260		SLIDER RAIL	5
	2C907270		LEVER PICK UP	5
⊙	2C907280		TORQUE LIMITER 340	5
⊙	2C907290		SPRING REGIST B	5
	2C907300		SHAFT RETARD	5
	2C907320		SPRING RETARD	5
	2C907340		SPRING PICK UP	5
	2C907350		SPRING LEVER	5
	2C907360		SPRING CURSOR R	3
⊙	2C907370		MARKER CASSETTE	3
	2C907380		TURN PLATE CASSETTE	3
⊙	2C907390		LEVER CURSOR C	3
	2C907400		HOLDER PULLEY A	5
	2C907410		PULLEY GUIDE A	5
	2C907420		HOLDER FEED SHAFT	5
⊙	2C907430		BUSH PAPER FEED C	5
	2C907440		RIGHT MOUNT REGIST	5
	2C907470		GROUND PLATE REG R	5
	2C907480		HOLDER SENSOR	5
	2C907490		STOPPER INDICATOR	3
	2C907500		GROUND PLATE BOTTOM	3
	2C907510		GROUND PLATE CASS	5
	2C907520		PLATE HEATER J	16
	2C907530		FILM REGIST R	5
	2C907540		GROUND PLATE REG F	5
	2C907550		LID CASSETTE A	3
	2C907560		LID CASSETTE B	3
	2C907570		LID CASSETTE C	3
	2C907580		FILM BASE RIB	5

• Parts with "⊙'" indicates the spare parts.

SP	Part.No.	Alternative.	Description	Fig.No.
⊙	2C907590		HOLDER RIGHT CURSOR	3
⊙	2C907600		PIN CURSOR C	3
	2C907610		SHEET TONER TANK	5
⊙	2C907620		SPRING LEVER F	3
	2C907640		STOPPER PLATE SIZE	5
	2C910040		GRID	9
⊙	2C912090		LAMP SCANNER YG	8
	2C912100		MIRROR FRAME A	8
	2C912110		REFLECTOR SCANNER	8
	2C912120		MIRROR FRAME B	8
	2C912130		ADJUSTING PLATE B	8
	2C912141		MOUNT BASE DF HINGE LEFT	8
	2C912150		RETAINER WIRE	8
	2C912160		GUIDE FFC B	8
	2C912180		FILM FRAME A	8
	2C912190		STANDARD PLATE SHADING	8
	2C912200		LEFT SIZE INDICATOR	8
	2C912210		REAR SIZE INDICATOR(M)	8
	2C912220		MOUNT PI	8
	2C912230		HOLDER FFC A	8
	2C912250		CONTACT GLASS	8
⊙	2C912260		BELT SCANNER	8
	2C912270		LOWER SEAL SCANNER	8
⊙	2C912280		CONTACT GLASS ADF	8
	2C912300		MOTOR PLATE SCANNER	8
⊙	2C912310		GEAR Z18/39	8
⊙	2C912320		GEAR Z36	8
	2C912330		SHAFT MOTOR DRIVE	8
⊙	2C912340		DRUM PULLEY	8
	2C912350		FRONT WIRE SCANNER	8
	2C912360		REAR WIRE SCANNER	8
⊙	2C912380		MOTOR SCANNER	8
⊙	2C912390		MIRROR A	8
	2C912410		GROUND PLATE SCANNER	8
	2C912420		HOLDER GLASS DF	8
⊙	2C912430		LID KMAS	1
	2C912440		LABEL SIZE (METRIC)	8
	2C912450		LABEL SIZE (INCH)	8
	2C912460		REAR SIZE INDICATOR(I)	8
	2C912470		PLATE DSUB	8
	2C912480		HOLDER CCD WIRE	8
	2C912490		MOUNT DSUB	8
	2C912580		COVER ISU	8
	2C912600		FRONT SIZE INDICATOR	8
	2C912610		MOUNT RELEASE SWITCH	8
	2C912620		GUIDE RELEASE SWITCH	8
	2C912630		STOPPER RELEASE SWITCH	14
	2C912640		SHAFT RELEASE SWITCH	8
	2C912650		SPRING RELEASE SWITCH	8
	2C912660		GUIDE CCD WIRE	8

SP	Part.No.	Alternative.	Description	Fig.No.
	2C912670		SHIELD SCANNER FRAME	8
⊙	2C912680		PULLEY SCANNER	8
	2C912690		GROUND PLATE SCANNER B	8
⊙	2C912700		SPONGE ORIGINAL SIZE	8
	2C912710		SHIELD SCANNER FRAME B	8
	2C912720		SHIELD BASE	8
	2C912730		SHIELD WIRE PANEL	8
	2C914080		REAR COVER DLP	9
	2C914280		GEAR Z20H B	9
⊙	2C916020		ROLLER REGIST LEFT	4
⊙	2C916040		FILM REGIST GUIDE	4
⊙	2C916060		LEVER CONVEYING FRONT	4
⊙	2C916070		LEVER CONVEYING REAR	4
⊙	2C916080		STOPPER BUSH REG	4
	2C916090		GUIDE CONVEYING	4
	2C916100		SPRING REGIST F	4
	2C916120		SPRING CONVEYING BASE	4
	2C916130		GROUND PLATE REG	4
	2C916140		GROUND PLATE CONVEYING	4
	2C916150		PIN CONVEYING HOOK	12
	2C916160		SHAFT CONVEYING	4
	2C916170		GUIDE FEED A	4
⊙	2C916180		GEAR Z15 REGIST	4
	2C916190		SPRING REGIST R	4
	2C916200		LEVER TRANS GUIDE	4
	2C916220		REINFORCEMENT CONVEYING	4
	2C916230		SHAFT CONVEYING LEVER	4
	2C916240		FILM REGIST GUIDE R	4
	2C916250		COLLAR REGIST	4
⊙	2C916260		BUSH REGIST	4
	2C916270		SPACER REG F	4
	2C916280		SPACER REG T0.5	4
	2C916290		FILM CONV BASE	4
	2C916300		FILM DU GUIDE	4
⊙	2C917010		ROLLER TRANSFER	4
⊙	2C917020		GEAR TRANSFER	4
	2C917040		TERMINAL PLATE TRANS	4
	2C917050		REINFORCEMENT TRANS GUIDE	4
	2C917060		SPRING TRANS F	4
⊙	2C917070		HOUSING STA ELIMINATION	4
⊙	2C917080		PLATE STA ELIMINATION	4
	2C917090		TERMINAL STA ELIMINATION	4
⊙	2C917100		BUSH TRANSFER	4
⊙	2C917110		COLLAR TRANS	4
	2C917120		SPRING TRANS R	4
	2C917150		SPRING GUIDE TRANS	4
	2C917160		BUSH TRANS GUIDE F	4
	2C917170		BUSH TRANS GUIDE R	4
	2C917180		BUSH TRANS ROLL F	4
	2C917200		SPACER TRANS ROLL	4

• Parts with "⊙'" indicates the spare parts.

SP	Part.No.	Alternative.	Description	Fig.No.
	2C917210		SPACER GUIDE LEFT TRANS	4
	2C918010		BLADE CLEANING	9
	2C918040		LOWER SEAL CLEANING	9
	2C918050		FRONT COVER CLEANING	9
	2C918150		TANK DISPOSAL	1
	2C918170		CAP TANK DISPOSAL	1
	2C918340		HOLDER CLAW	9
	2C918350		DETECTION PLATE	12
	2C918360		SPRING DETECTION	12
	2C918370		CLAW SEPARATION	9
	2C918400		HOLDER SENSOR B	12
	2C920030		REAR GUIDE FUSER	10
	2C920040		FRONT GUIDE FUSER	10
⊙	2C920060		ROLLER PRESS	10
	2C920110		FRONT PRESSING PLATE	10
	2C920120		REAR PRESSING PLATE	10
	2C920130		SPRING PRESSURE	10
⊙	2C920150		FRONT BUSH HEAT ROLLER	10
⊙	2C920160		REAR BUSH HEAT ROLLER	10
⊙	2C920170		GEAR Z38 HEAT ROLLER	10
⊙	2C920180		GEAR FUSER Z28	10
⊙	2C920190		SPRING SEPARATOR	10
	2C920200		GROUND PLATE PRESS	10
⊙	2C920230		HEATER M120 FUSER	10
⊙	2C920240		HEATER S120 FUSER	10
⊙	2C920250		HEATER M230 FUSER	10
⊙	2C920260		HEATER S230 FUSER	10
⊙	2C920310		THERMISTOR FUSER	10
	2C920320		SEAL DISCHAGER	10
⊙	2C920330		BEARING PRESSURE	10
⊙	2C920340		THERMOCUT 180 FUSER	10
⊙	2C920410		HEATER M110 FUSER	10
⊙	2C920420		HEATER S110 FUSER	10
⊙	2C921010		ROLLER EXIT INNER	7
⊙	2C921020		ROLLER FEED SHIFT	7
⊙	2C921040		PULLEY FEED SHIFT	7
	2C921050		GUIDE SHIFT	7
	2C921061		GUIDE SEPARATE	7
	2C921080		HOUSING EXIT LOWER	7
	2C921091		GUIDE EXIT LOWER	7
⊙	2C921100		ACTUATOR EXIT INNER	7
⊙	2C921110		ACTUATOR EXIT LEFT	7
⊙	2C921120		GEAR 23 EXIT	7
⊙	2C921160		ARM SEPARATE	7
	2C921180		ARM LINK	7
	2C921190		SPRING PULLEY INNER	7
	2C921200		SPRING PULLEY FEED SHIFT	7
	2C921221		SPRING GUIDE DU	7
	2C921231		GUIDE DU	7
	2C921240		ARM SHIFT B	7

SP	Part.No.	Alternative.	Description	Fig.No.
	2C921260		PLATE EARTH EXIT 2	7
	2C921270		ARM SEPARATE B	7
	2C921280		SPRING SEPARATE	7
	2C921290		SPRING LINK	7
	2C921310		PLATE EARTH EXIT B	7
	2C921330		SPRING ACTUATOR INNER	7
⊙	2C921340		BELT EXIT	7,15
⊙	2C921350		PULLEY EXIT	7
⊙	2C921360		PULLEY EJECT	7
	2C921370		STOPPER SE	7
	2C921380		SPRING PULLEY EJECT	7
	2C921390		PLATE EXIT HOLDER	7
	2C921400		SHOULDER SCREW EXIT	7
	2C922010		MOUNT DRIVE UNIT	11
⊙	2C922020		GEAR 122	11
⊙	2C922030		GEAR 88/34	11
⊙	2C922040		GEAR 50	11
⊙	2C922050		GEAR 40	11
⊙	2C922060		POSITIONING BUSH DRUM	11
⊙	2C922070		GEAR 30/23	11
⊙	2C922080		GEAR 60	11
⊙	2C922100		GEAR 25 DPX	11
⊙	2C922110		GEAR 32 DPX	11
	2C922130		MOUNT CONT DRIVE	11
⊙	2C922140		GEAR 25 DEV	11
⊙	2C922150		GEAR 26 DEV	11
⊙	2C922160		SHAFT DPX DRIVE	11
⊙	2C922170		COUPLING CONT P	11
⊙	2C922180		COUPLING CONT S	11
⊙	2C922190		COUPLING DRUM	11
⊙	2C922200		GEAR 43/20	11
⊙	2C922210		GEAR 20	11
⊙	2C922220		GEAR 25	11
⊙	2C922230		GEAR 29 FIX JOINT	11
	2C922240		SPRING FIX JOINT	11
	2C922250		SPRING DRUM COUPLING	11
	2C922260		SPRING CONT P	11
	2C922270		SPRING CONT S	11
	2C922280		MOUNT HV PCB	11
	2C922290		HOLDER GEAR	11
⊙	2C922300		GEAR 40 FIXJOINT	11
⊙	2C922330		GEAR 30 PF	11
⊙	2C922340		GEAR 31	11
⊙	2C922350		GEAR 51 REG	11
⊙	2C922360		GEAR 25 PF	11
	2C922370		MOUNT REG MOTOR	11
	2C923010		UPPER DUCT	11
	2C923020		LOWER DUCT	11
	2C923030		FILM COOLING	11
⊙	2C925030		KEY OPERATION 10	13

• Parts with "⊙'" indicates the spare parts.

SP	Part.No.	Alternative.	Description	Fig.No.
⊙	2C925040		KEY SAVER	13
⊙	2C925050		KEY PROGRAM	13
⊙	2C925060		KEY EXPOSURE	13
⊙	2C925070		KEY ZOOM	13
⊙	2C925080		KEY SIZE	13
⊙	2C925100		COVER OPERATION E	13
⊙	2C925120		LEFT OPE SHEET I	13
	2C925150		RIGHT DUST SHIELD	13
	2C925160		LEFT DUST SHIELD	13
	2C925170		CENTER DUST SHIELD	13
	2C925180		RETAINER OPERATION	13
	2C925190		SHEET OPERATION PCB	2
	2C925201		MOUNT OPERATION R	13
	2C925210		SPACER OPE PCB	13
⊙	2C925220		COVER OPERATION(RS)	13
⊙	2C925240		LEFT OPE SHEET(RS)	13
	2C925260		CENTER OPE SHEET I	13
	2C925270		CENTER OPE SHEET M	13
	2C925280		CENTER OPE SHEET(RS)	13
⊙	2C925320		LENS OPERATION COVER	13
⊙	2C925330		CENTER OPE COVER	13
	2C926010		BASE TERMINAL TRANSFER	2
	2C926020		BASE TERMINAL MAIN	2
	2C926030		TERMINAL DLP	2
	2C926040		TERMINAL TRANSFER	2
	2C926050		TERMINAL SEPARATION	2
	2C926060		TERMINAL MAIN	2
	2C926070		HOLDER INTERLOCK SW	12
	2C926080		GROUND PLATE CONVEYING	2
	2C926100		TERMINAL FUSER	2
	2C926120		GROUND PLATE FUSER	2
	2C926130		SHIELD RIGHT COVER	1
	2C926140		SHIELD UPPER LEFT	2
	2C926150		SHIELD UPPER LEFT B	2
	2C926160		SHIELD CCD WIRE	12
	2C926500		SHIELD MAIN	12
	2C926510		MOUNT POWER SOURCE	12
	2C926520		PLATE INLET	12
⊙	2C927010		MOTOR MAIN	11
⊙	2C927020		MOTOR EJECT	11
⊙	2C927070		FAN COOLING 80-25	11
⊙	2C927090		SENSOR ORIGINAL	8
⊙	2C927140		SWITCH CONTAINER	2
⊙	2C927170		SWITCH INTERLOCK L	12
⊙	2C927180		SWITCH INTERLOCK F	12
⊙	2C927190		CLUTCH FEED	11
⊙	2C927210		SENSOR 248NL1	5,6,8,15
⊙	2C927220		MOTOR REGISTRATION	11
	2C927230		CORE SFT-72SNB-026K	12
	2C927250		GASKET SHIELD 8X10X45	12
	2C927510		WIRE ENGINE	12
	2C927520		WIRE CASSETTE PCB	5
	2C927530		WIRE EJECT	7
	2C927540		WIRE DP	8
	2C927550		WIRE SCANNER PI	8
	2C927560		WIRE ORIGINAL SIZE	8
⊙	2C927580		FFC INVERTER	8
	2C927600		WIRE FUSER	12
	2C927610		WIRE DESK POWER	12
	2C927620		WIRE MPF	6
⊙	2C927630		FFC CCD	8
	2C927640		WIRE PANEL	13
	2C927660		WIRE DESK	12
	2C927670		WIRE CASSETTE SW	5
	2C927680		WIRE FRONT SW	12
	2C927690		WIRE FUSER UNIT	10
⊙	2C927740		FFC HVU	12
	2C927750		WIRE CASSETTE PE	5
	2C927760		WIRE MAIN MOTOR	11
	2C927780		WIRE DEHUMIDIFIER	16
	2C927790		WIRE UPPER LEFT	2
⊙	2C928040		PCB LAMP INVERTER	8
⊙	2C928051		PCB HIGH VOLTAGE	12
⊙	2C928080		PCB LVU 100	12
⊙	2C928090		PCB LVU 200	12
⊙	2C960100		MOUNT KEY COUNTER	16
⊙	2C960110		WIRE KEY COUNTER	16
⊙	2C968134		PCB FLASH DIMM ASSY	16
⊙	2C968194		PCB MAIN ASSY SP	12
	2C982010		SET MK-410	9
⊙	2C993020		PARTS,MC-410,SP	9
⊙	2C993081		PARTS,OPE ASS'Y(I)SP	13
⊙	2C993101		PARTS,OPE ASS'Y(M)SP	13
⊙	2C993130		PARTS,BYPASS PULLEY,SP	6
⊙	2C993140		PARTS,BYPASS PAD,SP	6
⊙	2C993170		PARTS,CONTACT GLASS,M(SP)	8
⊙	2C993180		PARTS,CONTACT GLASS,I(SP)	8
⊙	2C993190		PARTS,DEH.ASSY120,SP	16
⊙	2C993200		PARTS,DEH.ASSY240,SP	16
⊙	2C993210		PARTS,REGIST CLEANER,ASSY	5
	2CX82010		SET,PLATEN COVER TYPE D	14
	2DC12230		SLIDER SCANNER	8
⊙	2DC25052		KEY PRINT	13
⊙	2DC25060		KEY STOP	13
⊙	2DC25070		KEY RESET	13
⊙	2FX04010		FRONT RIGHT COVER	1
⊙	302C901192	2C901192	PCB REGISTRATION ASSY	11
⊙	302C904031	2C904031	TRAY EXIT (1/2)	1
⊙	302C904372	2C904372	INNER FRONT COVER	1
⊙	302C904520	2C904520	PLATE FRONT STRAP B	7

• Parts with "⊙'" indicates the spare parts.

SP	Part.No.	Alternative.	Description	Fig.No.
⊙	302C904530	2C904530	PIN FRONT STRAP B	7
⊙	302C904560	2C904560	STOPPER COVER DSUB	1
	302C905280	2C905280	LABEL CASSETTE	3
⊙	302C906330	2C906330	FILM PROTECT BYPASS B	6
	302C906430	2C906430	SPACER BYPASS	2
	302C907161	2C907161	RIGHT GUIDE REGIST	5
⊙	302C907171	2C907171	ACTUATOR REGIST	5
⊙	302C907650	2C907650	SPACER SW	5
⊙	302C907660	2C907660	SPACER RIGHT GUIDE	10
	302C912291	2C912291	SPRING SCANNER TENSION	8
	302C912760	2C912760	PIN SCANNER	8
	302C916032	2C916032	BASE CONVEYING	4
	302C917031	2C917031	GUIDE LEFT TRANS FRONT	4
	302C920011	2C920011	RIGHT FRAME FUSER	10
	302C920021	2C920021	LEFT FRAME FUSER	10
⊙	302C920051	2C920051	ROLLER HEAT	10
	302C920141	2C920141	PLATE HEATER FUSER	10
	302C921072	2C921072	HOUSING EXIT UPPER	7
	302C921151	2C921151	ARM SHIFT	7
	302C921302	2C921302	BRACKET EXIT	7
	302C926111	2C926111	GROUND PLATE EXIT	2
	302C926170	2C926170	TAPE TERMINAL	2
⊙	302C927051	2C927051	SOLENOID BYPASS	6
⊙	302C968185	2C968185	PCB ENGINE ASSY SP	12
⊙	302C968290	2C968290	CORONA WIRE MCH SP	9
⊙	302C993011	2C993011	PARTS,CT-410,SP	3
⊙	302C993031	2C993031	PARTS,DV-410,SP	9
⊙	302C993052	2C993052	PARTS,FK-410(A),SP	10
⊙	302C993062	2C993062	PARTS,FK-410(E),SP	10
⊙	302C993092	2C993092	PARTS,LSU ASS'Y,SP	12
⊙	302C993250	2C993250	PARTS,ISU,SP	8
⊙	302C993270	2C993270	PARTS,FK-410(TW),SP	10
⊙	302C993290	2C993290	PARTS,FILM TRANS FRONT ASSY,SP	5
⊙	302C993310	2C993310	PARTS,OPE ASS'Y(RS)SP	13
⊙	302DA05050	2DA05050	LABEL BYPASS	7
	302DA16110	2DA16110	SPACER TRANS J	5
⊙	302DA20010	2DA20010	SPACER FUSER UNIT	10
⊙	302DA20020	2DA20020	STOPPER FUSER SPACER	10
	302DA21021	2DA21021	SHEET EJECT RIGHT	7
	302DA21031	2DA21031	SHEET EJECT LEFT	7
⊙	302FT20120	2FT20120	SEPARATOR ASSY	10
	302FT26040	2FT26040	FILM TERMINAL MAIN	2
⊙	302FX68013	2FX68013	PCB ENGINE ASSY SP	12
⊙	3CY07080		BUSHING 6	5,7,11
	3HY07010		FRAME DUPLEX	15
⊙	3HY07020		ROLLER DUPLEX A	15
⊙	3HY07030		ROLLER DUPLEX B	15
⊙	3HY07040		PULLEY 26-6 DUPLEX	15
⊙	3HY07050		PULLEY 26-8 DUPLEX	15
	3HY07060		JUNCTION PLATE DUPLEX	15

SP	Part.No.	Alternative.	Description	Fig.No.
	3HY07070		SPRING JUNCTION DUPLEX	15
⊙	3HY07090		GEAR 21 DUPLEX	15
⊙	3HY07100		PULLEY IDLE DUPLEX	15
	3HY07110		RETAINER DUPLEX	15
⊙	3HY07120		PULLEY 15 DUPLEX	15
	3HY07130		SHAFT 4 DUPLEX	15
	3HY07140		HOLDER DUPLEX SPRING	15
⊙	3HY07150		BUSHING DUPLEX ROLLER	15
	3HY07160		SPRING DUPLEX PULLEY	15
⊙	3HY07170		ACTUATOR DUPLEX	15
	3HY07180		RETAINER ACTUATOR	15
	3HY07190		PROTECTING PLATE WIRE	15
	3HY07200		GROUND PLATE DUPLEX	15
	3HY07210		LID DUPLEX	15
	3HY07220		PLATE LOCK DUPLEX	15
	3HY27010		WIRE DUPLEX	15
⊙	3HY27020		CLUTCH DU	15
⊙	5ESP03090001+01	SP000360	PUSH SWITCH 03 SN	5
⊙	5FNXGP1A73A++02	2DC27180	PT.SENSOR GP1A73AJ00	8
	5MBTPB3012PW++R	B1A63120	BIND T.T SCREW(+) / M3 X 12 CRFREE P-T	14
	5MBTPB4010PW++R	B1A64100	BIND T.T SCREW(+) / M4 X 10 CRFREE P-T	14
	5MMS111SL002	2BY20050	NUT FUSER A	10
	5MMW141LX002	2BZ02300	SPRING WIRE	9
⊙	5MVM176NN001	2BZ22230	BUSH GEAR Z26H 49515M0001A4	9
	5MVT263NN001	33910230	PIN CHARGER	9
⊙	5MVX111DN003	2A806250	RING STOPPER	3,11
⊙	5MVX111DN007	2BT11070	STOPPER 3	7
⊙	B0004350		ROUND HEAD SCREW M4X35	16
⊙	B2303060		COUNTER-SUNK HEAD SCREW BFHM3X6 (BLACK)	16
⊙	B4304060		TRIPLE SCREW M4X6 (BLACK)	16
⊙	C2303000		NUT BNM3 (BLACK)	16
	J0220040		PLUG EL 4P,ELP-04V	16
	M0208010		SPACER,SFS-2.6S-B1WM(JST)	8
⊙	M1658030		FUSE,215008(LITTEL-FUSE)	12
	M2105740		MINIATURE CLAMP,UAMS-05S-2	12
	M2105890		CLAMP,CKN-05(KITAGAWA)	12
	M2107240		BAND,KI-100(KITAGAWA)	12
	M2108130		SPACER,KGPS-4S	12
	M2109000	49513901	WIRE SADDLE,WS-1NS	8,12
	M2109020	49829401	WIRE SADDLE,WS-2WS	12
⊙	M5561000		FUSE,CES6-N1(SOC)	12
⊙	M6056000		FUSE,19181-T6.3H(WICKMANN)	12
	M7005030		CLAMP,EMT-5N(TAKEUCHI)	12
	M70A5020		CLAMP,FCC-125EM513(TAKEUCHI)	12

• Parts with "⊙'" indicates the spare parts.

KYOCERA MITA EUROPE B.V.

Hoeksteen 40, 2132 MS Hoofddorp,
The Netherlands
Phone: +31.(0)20.654.0000
Home page: http://www.kyoceramita-europe.com
Email: info@kyoceramita-europe.com

KYOCERA MITA NEDERLAND B.V.
Hoeksteen 40 2132 MS Hoofddorp,
The Netherlands
Phone: +31.(0)20.587.7200

KYOCERA MITA (UK) LTD.
8 Beacontree Plaza
Gillette Way, Reading Berks RG2 0BS,
UK
Phone: +44.(0)118.931.1500

KYOCERA MITA ITALIA S.P.A.
Via Verdi 89 / 91 20063 Cernusco sul Naviglio,
(Milano), Italy
Phone: +39.02.92179.1

S.A. KYOCERA MITA BELGIUM N.V.
Hermesstraat 8A 1930 Zaventem,
Belgium
Phone: +32.(0)2.720.9270

KYOCERA MITA FRANCE S.A.
Parc Les Algorlthmes, Saint Aubin
91194 GIF-SUR-YVETTE,
France
Phone: +33.(0)1.6985.2600

KYOCERA MITA ESPAÑA S.A.
Edificio Kyocera, Avda de Manacor N. 2,
Urb. Parque Rozas 28290 Las Rozas, Madrid,
Spain
Phone: +34.(0)91.631.8392

KYOCERA MITA FINLAND OY
Kirvesmiehenkatu 4 00810 Helsinki,
Finland
Phone: +358.(0)9.4780.5200

KYOCERA MITA (SCHWEIZ) AG
Industriestrasse 28, 8604 Volketswil,
Switzerland
Phone: +41.(0)1.908.4949

KYOCERA MITA DEUTSCHLAND GMBH
Mollsfeld 12-40670 Meerbusch,
Germany
Phone: +49.(0)2159.918.0

KYOCERA MITA GMBH AUSTRIA
Eduard-Kittenberger Gasse 95
A-1230 Wien,
Austria
Phone: +43.(0)1.86338.401

KYOCERA MITA SVENSKA AB
Vretenragen 2, 6tr 171 54 Solna,
Sweden
Phone: +46.(0)8.546.550.00

KYOCERA MITA NORGE
Postboks 150 Oppsal, NO 0619 Oslo
Olaf Helsetsvei 6, NO 0694 Oslo,
Norway
Phone: +47.(0)22.62.73.00

KYOCERA MITA DANMARK A/S
Slotsmarken 11, 2 DK-2970 Hørsholm,
Denmark
Phone: +45.7022.3880

KYOCERA MITA PORTUGAL LDA.
Rua do Centro Cultural, no 41 1700-106 Lisbon,
Portugal
Phone: +351.(0)21.843.6780

KYOCERA MITA SOUTH AFRICA (PTY) LTD.
527 Kyalami Boulevard,
Kyalami Business Park Midrand,
South Africa
Phone: +27.(0)11.540.2600

KYOCERA MITA AMERICA, INC.

Headquarters:
225 Sand Road,
Fairfield, New Jersey 07004-0008,
U.S.A.
Phone: (973) 808-8444

KYOCERA MITA AUSTRALIA PTY. LTD.
Level 3, 6-10 Talavera Road, North Ryde,
N.S.W. 2113 Australia
Phone: (02) 9888-9999

KYOCERA MITA NEW ZEALAND LTD.
1-3 Parkhead Place, Albany
P.O. Box 302 125 NHPC, Auckland,
New Zealand
Phone: (09) 415-4517

KYOCERA MITA (THAILAND) CORP., LTD.
9/209 Ratchada-Prachachem Road,
Bang Sue, Bangkok 10800, Thailand
Phone: (02) 586-0320

KYOCERA MITA SINGAPORE PTE LTD.
121 Genting Lane, 3rd Level,
Singapore 349572
Phone: 67418733

KYOCERA MITA HONG KONG LIMITED
11/F., Mita Centre,
552-566, Castle Peak Road,
Tsuen Wan, New Territories,
Hong Kong
Phone: 24297422

KYOCERA MITA TAIWAN Corporation.
7F-1~2, No.41, Lane 221, Gangchi Rd.
Neihu District, Taipei, Taiwan, 114. R.O.C.
Phone: (02) 87511560

KYOCERA MITA Corporation

2-28, 1-chome, Tamatsukuri, Chuo-ku
Osaka 540-8585, Japan
Phone: (06) 6764-3555
http://www.kyoceramita.com

© 2005 KYOCERA MITA Corporation

KYOCERA is a trademark of Kyocera Corporation

Printed in Holland