tripplite.com/support/smartonline-series-ups

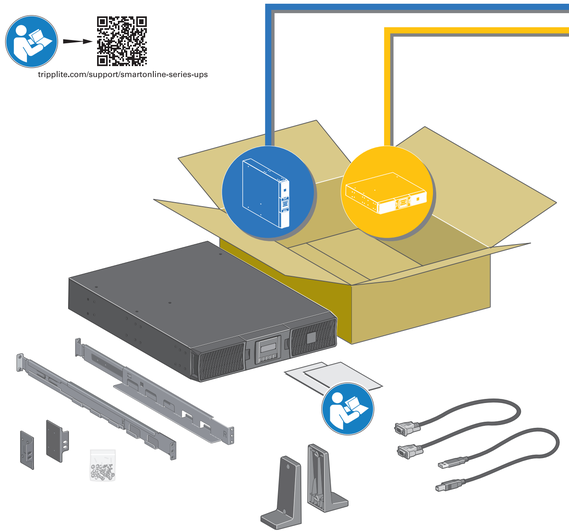

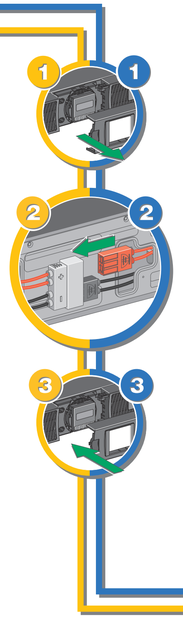

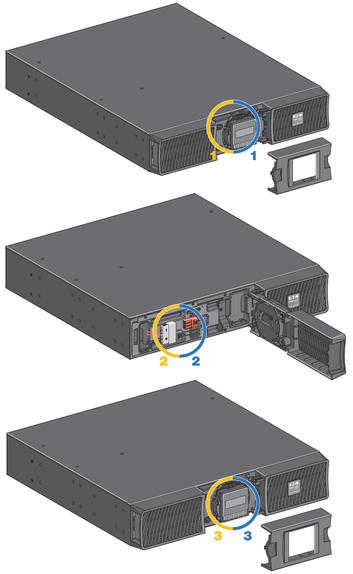

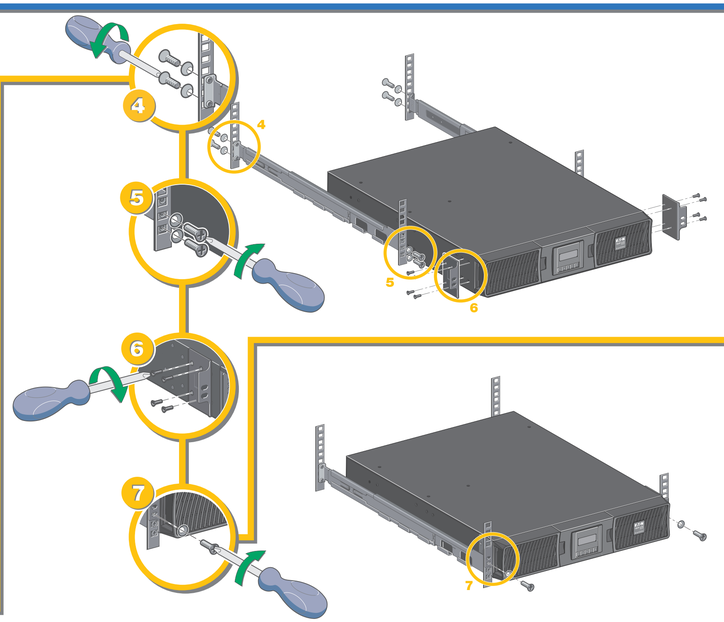



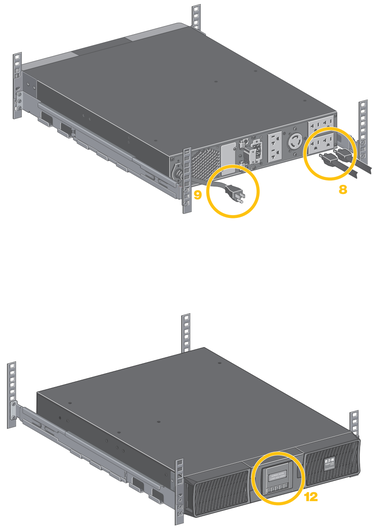

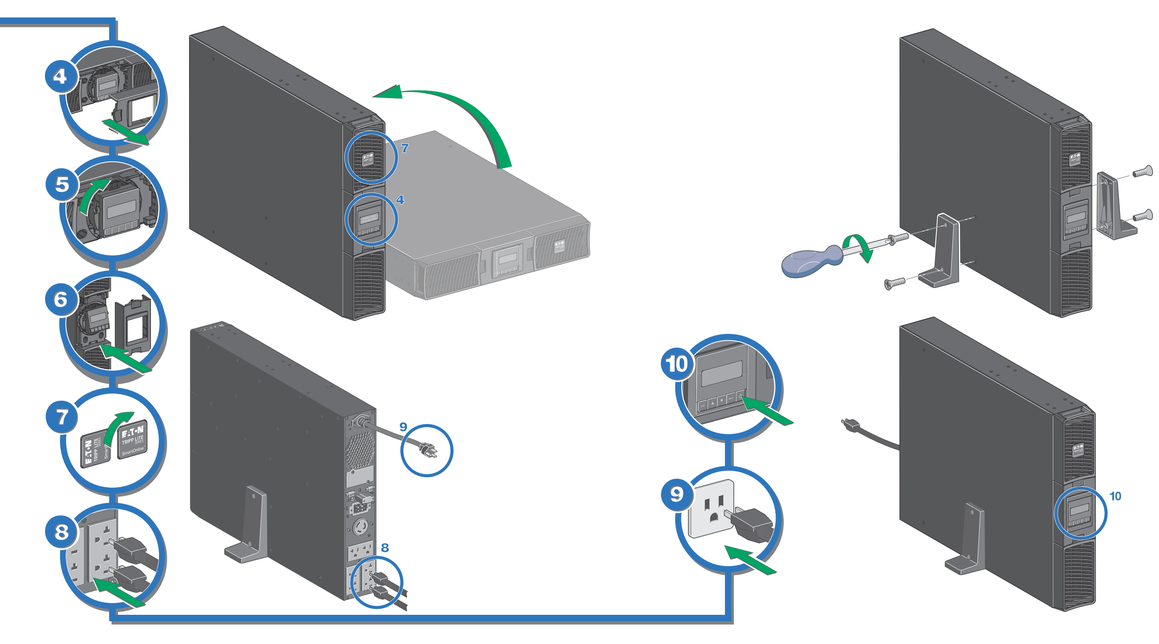

tripplite.com

SU1500RTXLCD2UTAA
SU2200RTXLCD2UTAA
SU3000RTXLCD2UTAA

Quick Start

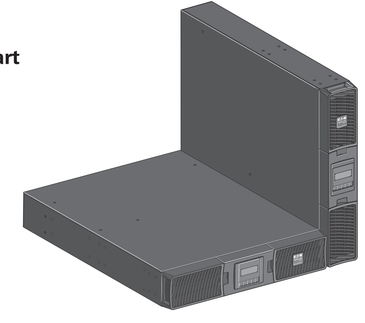

22
PAP

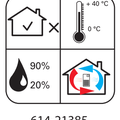

614-21385

EATON
Powering Business Worldwide