Electrolux

electrolux.com/register



EW6F310GQ

EN User Manual | **Washing Machine**

Welcome to Electrolux! Thank you for choosing our appliance.

Get usage advice, brochures, troubleshooting, service and repair information:
www.electrolux.com/support

Subject to change without notice.

CONTENTS

1. SAFETY INFORMATION..... 2
2. SAFETY INSTRUCTIONS..... 4
3. PRODUCT DESCRIPTION..... 6
4. TECHNICAL DATA..... 8
5. INSTALLATION..... 8
6. ACCESSORIES..... 12
7. CONTROL PANEL..... 13
8. BEFORE FIRST USE..... 18
9. THE AUTODOSE TECHNOLOGY (AUTODOSING)..... 19
10. PROGRAMMES..... 26
11. THE APP AND ADDITIONAL HIDDEN PROGRAMMES..... 30
12. WI-FI - CONNECTIVITY SETUP..... 30
13. DAILY USE..... 33
14. HINTS AND TIPS..... 37
15. CARE AND CLEANING..... 39
16. TROUBLESHOOTING..... 46
17. CONSUMPTION VALUES..... 50
18. QUICK GUIDE..... 51
19. ENVIRONMENTAL CONCERNS..... 53

1. ⚠ SAFETY INFORMATION

Before beginning the installation and use of this appliance, carefully read the supplied instructions.
The manufacturer is not responsible for any injuries or damage that are the result of incorrect installation or usage.
Always keep the instructions in a safe and accessible location for future reference.

1.1 Children and vulnerable people safety

- This appliance can be used by children aged from 8 years and above and persons with reduced physical, sensory or mental capabilities or lack of experience and knowledge if

they have been given supervision or instruction concerning the use of the appliance in a safe way and understand the hazards involved.
- Children between 3 and 8 years of age and persons with very extensive and complex disabilities shall be kept away from the appliance unless continuously supervised.
- Children of less than 3 years of age should be kept away from the appliance unless continuously supervised.
- Children should be supervised to ensure that they do not play with the appliance.
- Keep all packaging away from children and dispose of it appropriately.
- Keep detergents away from children.
- Keep children and pets away from the appliance when the door is open.
- If the appliance has a child safety device, it should be activated.
- Children shall not carry out cleaning and user maintenance of the appliance without supervision.

1.2 General Safety

- This appliance is for washing domestic-type, machine-washable laundry only.
- This appliance is designed for single household domestic use in an indoor environment.
- This appliance may be used in offices, hotel guest rooms, bed & breakfast guest rooms, farm guest houses and other similar accommodation where such use does not exceed (average) domestic usage levels.
- Do not change the specification of this appliance.
- The appliance maximum load is 10 kg. Do not exceed the maximum load of each programme (refer to the “Programmes” chapter).
- The operating water pressure at the water entry point from the outlet connection must be between 0.5 bar (0.05 MPa) and 10 bar (1.0 MPa).

- The ventilation opening in the base must not be covered by a carpet, mat, or any floor covering.
- The appliance must be connected to the water mains using the new supplied hose sets, or other new hose sets supplied by the Authorised Service Centre.
- Old hose sets must not be reused.
- If the mains power supply cable is damaged, it must be replaced by the manufacturer, its Authorised Service Centre or similarly qualified persons to avoid an electrical hazard.
- Before any maintenance operation, deactivate the appliance and disconnect the mains plug from the socket.
- Do not use high pressure water sprays and/or steam to clean the appliance.
- Clean the appliance with a moist cloth. Use only neutral detergents. Do not use abrasive products, abrasive cleaning pads, solvents or metal objects.
- If a tumble dryer is stacked on the top of the washing machine, make sure to use the correct stacking kit approved by Electrolux (see more details in chapter "Accessories - Stacking kit").

2. SAFETY INSTRUCTIONS

2.1 Installation

ⓘ

The installation must comply with relevant national regulations.

- Remove all the packaging and the transit bolts including rubber bush with plastic spacer.
- Keep the transit bolts in a safe place. If the appliance is to be moved in the future they must be reattached to lock the drum to prevent an internal damage.
- Always take care when moving the appliance as it is heavy. Always use safety gloves and enclosed footwear.
- Follow the installation instructions supplied with the appliance.
- Do not install or use a damaged appliance.
- Do not install or use the appliance where the temperature can be less than 0°C or where it is exposed to the weather.
- The floor area on which the appliance is to be installed must be flat, stable, heat resistant and clean.
- Make sure that there is air circulation between the appliance and the floor.
- When the appliance is in its permanent position, check if it is levelled correctly with the aid of a spirit level. If it is not, adjust the feet accordingly.
- Do not install the appliance directly above a floor drain.
- Do not spray water on the appliance and do not expose it to excessive humidity.
- Do not install the appliance where the appliance door cannot be fully opened.
- Do not put a closed container to collect possible water leakage under the

appliance. Contact the Authorised Service Centre to ensure which accessories can be used.

2.2 Electrical connection

⚠ WARNING!

Risk of fire and electric shock.

- WARNING: This appliance is designed to be installed / connected to a grounding connection in the building.
- Always use a correctly installed shockproof socket.
- Make sure that the parameters on the rating plate are compatible with the electrical ratings of the mains power supply.
- Do not use multi-plug adapters and extension cables.
- Make sure not to cause damage to the mains plug and to the mains cable. Should the mains cable need to be replaced, this must be carried out by our Authorised Service Centre.
- Connect the mains plug to the mains socket only at the end of the installation. Make sure that there is access to the mains plug after the installation.
- Do not touch the mains cable or the mains plug with wet hands.
- Do not pull the mains cable to disconnect the appliance. Always pull the mains plug.

2.3 Water connection

- The inlet water shall not exceed 25 °C.
- Do not cause damage to the water hoses.
- Before connection to new pipes, pipes not used for a long time, where repair work has been carried out or new devices fitted (water meters, etc.), let the water flow until it is clean and clear.
- Ensure that there are no visible water leaks during and after the first use of the appliance.
- Do not use an extension hose if the inlet hose is too short. Contact the Authorised Service Centre for the replacement of the inlet hose.
- When unpacking the appliance, It is possible to see water flowing from the drain hose. This is due to the testing of the appliance with the use of water in the factory.
- You can extend the drain hose to maximum 400 cm. Contact the Authorised Service Centre for the other drain hose and the extension.
- Make sure that there is access to the tap after the installation.

2.4 Use

⚠ WARNING!

Risk of injury, electric shock, fire, burns or damage to the appliance.

- Follow the safety instructions on the detergent packaging.
- Do not put flammable products or items that are wet with flammable products in, near or on the appliance.
- Do not wash fabrics which are heavily soiled with oil, grease or other greasy substances. It can damage rubber parts of the washing machine. Prewash such fabrics by hand before loading them into the washing machine.
- Do not touch the glass door while a programme operates. The glass can get hot.
- Make sure that all metal objects are removed from the laundry.

2.5 Service

- To repair the appliance contact the Authorised Service Centre. Use original spare parts only.
- Please note that self-repair or non-professional repair can have safety consequences and might void the guarantee.
- The following spare parts are available for at least 10 years after the model has been discontinued: motor and motor brushes, transmission between motor and drum, pumps, shock absorbers and springs, washing drum, drum spider and related ball bearings, heaters and heating elements, including heat pumps, piping and related equipment including hoses, valves, filters and aquastops, printed circuit boards, electronic displays, pressure switches, thermostats and sensors, software and firmware including

reset software, door, door hinge and seals, other seals, door locking assembly, plastic peripherals such as detergent dispensers. The duration may be longer in your country. For further information, please visit our website.
- Please note that some of these spare parts are only available to professional repairers, and that not all spare parts are relevant for all models.
- Concerning the lamp(s) inside this product and spare part lamps sold separately: These lamps are intended to withstand extreme physical conditions in household appliances, such as temperature, vibration, humidity, or are intended to signal information about the operational status of the appliance. They are not intended to be used in other applications and are not suitable for household room illumination.

2.6 Disposal

⚠ **WARNING!**

Risk of injury or suffocation.

- Disconnect the appliance from the mains electrical and water supplies.
- Cut off the mains electrical cable close to the appliance and dispose of it.
- Remove the door catch to prevent children or pets from becoming trapped in the drum.
- Dispose of the appliance in accordance with local requirements for the disposal of Waste Electrical and Electronic Equipment (WEEE).

3. PRODUCT DESCRIPTION

3.1 Special features

Your new washing machine meets all modern requirements for an effective treatment of laundry with low water, energy and detergent consumption and will care for fabrics.

- The **AutoDose technology** automatically dispenses the right amount of detergent according to the load; the drawer has two integrated tanks (detergent + softener) and two additional compartments for detergent and additives manual load. It gives the highest use flexibility.
- The **SensiCare System** detects the laundry load weight defining the programme duration in 30 seconds. The washing programme is tailored to the laundry load and the type of fabric without consuming more time, energy and water than necessary. Read the paragraph "The SensiCare load detection " for more details.
- The **Wi-Fi connection** enables you to start and check your washing cycle status in remote control.

3.2 Appliance overview

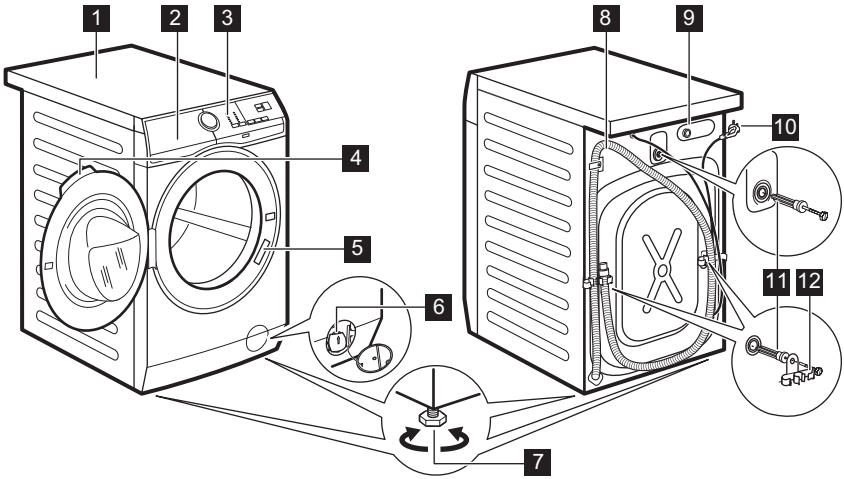

1 Worktop
2 Detergent dispenser with AutoDose tanks and manual compartments
3 Control panel
4 Door handle
5 Rating plate
6 Drain pump filter
7 Feet for levelling the appliance
8 Drain hose
9 Inlet hose connection
10 Mains cable
11 Transit bolts
12 Hose support

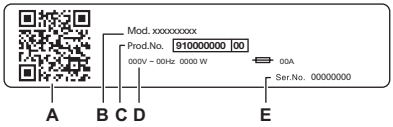

The rating plate reports:
A. QR code
B. model name
C. product number
D. electrical ratings
E. serial number

Scan the **QR code** on the appliance to register your product and get the most out of it.

- - Access your appliance details, documentation and articles on how to use the best features (User Manual also available at **electrolux.com/manuals**)
- - Get usage advice, troubleshooting, service and repair information (also available at **electrolux.com/support**)
- - Buy accessories, Consumable and Original Spare parts for you appliance (also available at **electrolux.com/shop**)

4. TECHNICAL DATA

Dimension	Width/ Height/ Total depth	59,7 cm /84,7 cm /65,8 cm
Electrical connection	Voltage Overall power Fuse Frequency	230 V 2100 W 10 A 50 Hz
Level of protection against ingress of solid particles and moisture ensured by the protective cover, except where the low voltage equipment has no protection against moisture		IPX4
Water supply pressure	Minimum Maximum	0.5 bar (0.05 MPa) 10 bar (1.0 MPa)
Water supply **1)**		Cold water
Maximum Load	Cotton	10 kg
Spin Speed	Maximum spin speed	1351 rpm

1) Connect the water inlet hose to a water tap with a 3/4" thread.

5. INSTALLATION

⚠ WARNING!

Refer to Safety chapters.

5.1 Unpacking

1. Open the door. Remove all the items from the drum.

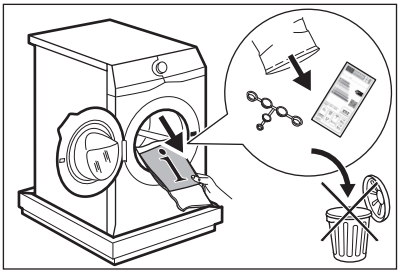

ⓘ

Accessories delivered with the appliance may vary depending on the model.

2. Put the packaging element on the floor behind the appliance and carefully put it down onto its rear side. Remove the polystyrene protection from the bottom.

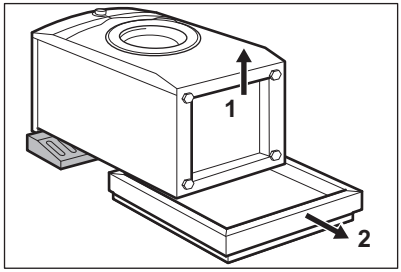

⚠ CAUTION!

Do not lay washing machine on its front.

3. Put the appliance back into an upright position. Remove the power supply cable

and the drain hose from the hose holders.

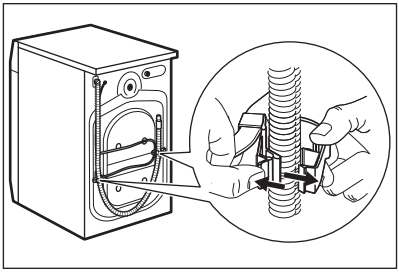

⚠ WARNING!

It is possible to see water flowing from the drain hose. This is because the washing machine has been tested at the factory.

4. Remove the three transit bolts and pull out the plastic spacers.

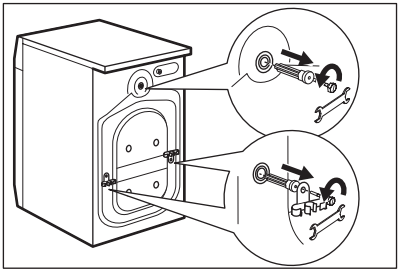

ⓘ

We recommend that you keep the packaging and the transit bolts for any transport of the appliance.

5. Put the plastic caps, that you find in the user manual bag, in the holes.

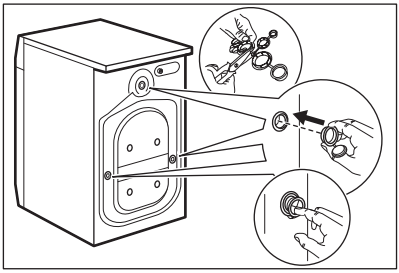

5.2 Information for installation

Positioning and levelling

Adjust the appliance correctly to prevent vibration, noise and movement of the appliance when it operates.

1. Install the appliance on a flat hard floor. The appliance must be levelled and stable. Make sure that the appliance does not touch the wall or other units and there is air circulation below the appliance.
2. Loosen or tighten the feet to adjust the level. All feet must rest firmly on the floor.

⚠ WARNING!

Do not put cardboard, wood or equivalent materials below the appliance feet to adjust the level.

The inlet hose

⚠ CAUTION!

Make sure there is no damage to hoses and there are no leaks from the couplings. Do not use an extension hose if the inlet hose is too short. Contact the service centre for information on inlet hose replacement.

1. Connect the water inlet hose to the back of the appliance if needs. Usually, it is already installed at the factory.

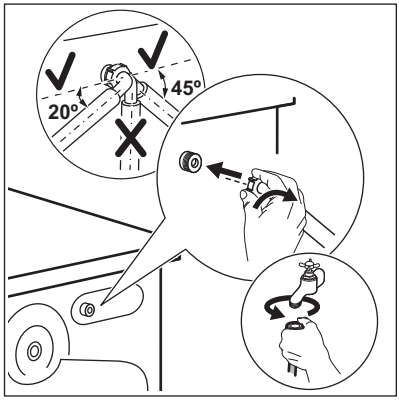

2. Position it toward left or right depending on the position of the water tap. Make sure that the inlet hose is not in vertical position.
3. If necessary, loosen the ring nut to set it in the correct position.
4. Connect the water inlet hose to the cold water tap with 3/4" thread.

5. Some models can contain inlet hose with water stop device. It prevents any leaks in the hose because of its natural ageing. The sector in the window shows this fault **A**. If this occurs, close the water tap and contact the authorized service centre for information to replace the hose.

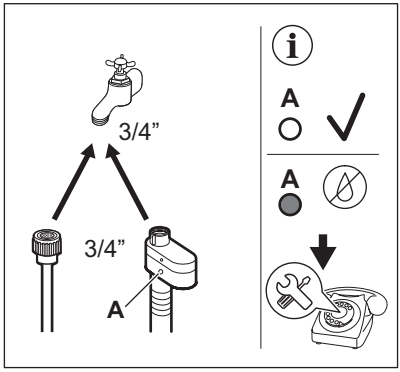

⚠ WARNING!

The inlet water shall not exceed 25 °C.

Water drainage

The drain hose should stay at a height of no less than 60 cm and not more than 100 cm.

ⓘ

You can extend the drain hose to maximum 400 cm. Contact the authorised service centre to buy the other drain hose and the extension.

Make sure that the drain hose makes a loop to prevent particles going into the appliance from the sink.

Connect the drain hose to the spigot and tighten it with a clamp. Make sure that the drain hose makes a loop to prevent particles going into the appliance from the sink.

Position the hose directly to a built-in drain pipe in the room wall and tighten it with a clamp.

Without the plastic hose guide, to a sink spigot- Put the drain hose in the spigot and tighten it with a clamp.

The drain hose can be bent into U shape and put around the plastic guide. On the edge of a sink - Fasten the guide to the water tap or to the wall.

ⓘ

Make sure that the plastic guide cannot move when the appliance drains and the drain hose end is not immersed in the water. There may be a return of dirty water into the appliance. Buy accessories from authorised supplier.

To a stand pipe with vent hole - Insert the drain hose directly into a drain pipe or stand pipe

ⓘ

The end of the drain hose must always be ventilated , i.e. the inner diameter of the drain pipe (min. 38 mm - min. 1.5") must be larger than the external diameter of the drain hose.

It is possible to connect the drain hose in different ways:

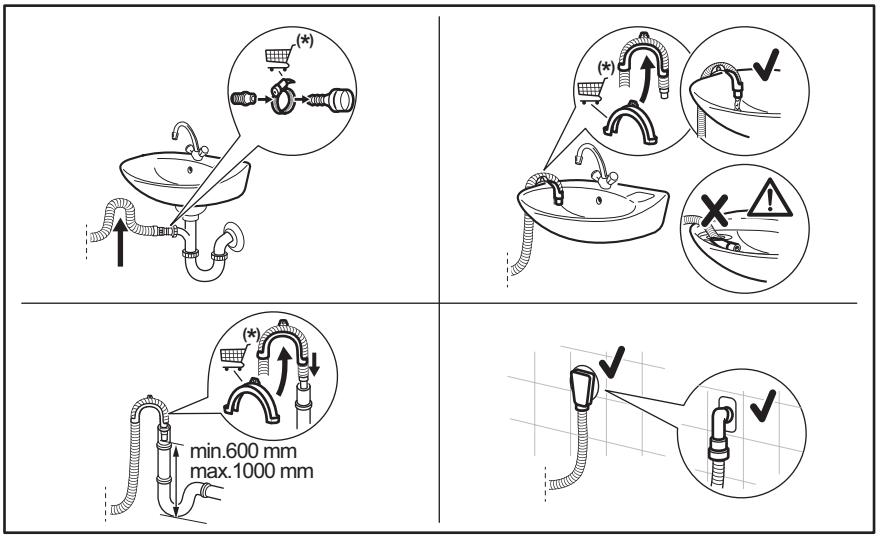

(*) Subject to change without notice.

5.3 Electrical connection

At the end of installation you can connect the mains plug to the mains socket.

The rating plate and the 'Technical Data' chapter indicate the necessary electrical ratings. Make sure that they are compatible with the mains power supply.

Check that your domestic electrical installation can take the maximum load required, also taking into account any other appliances may also be in use.

Connect the appliance to an earthed socket.

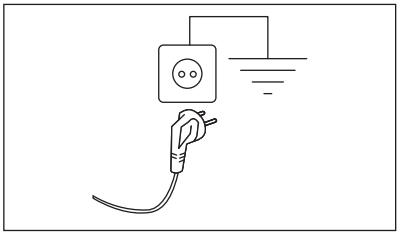

The power supply cable must be easily accessible after installing the appliance.

For any electrical work required to install this appliance, contact our Authorised Service Centre.

The manufacturer does not accept any responsibility for damage or injury through failure to comply with the above safety precaution.

6. ACCESSORIES

6.1 Fixing plate kit

If you install the appliance in a wooden floor, secure the appliance in the fixing plate.

Read carefully the instructions supplied with the accessory.

6.2 Stacking kit

The tumble dryer can be stacked on the top of the washing machine **only by using the correct stacking kit**.

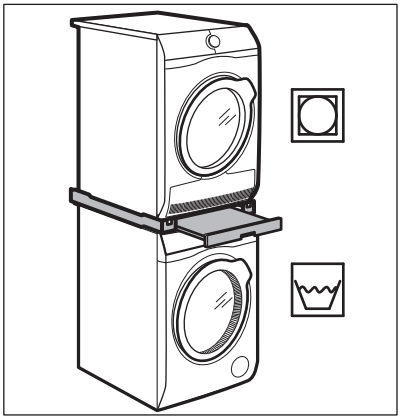

⚠ WARNING!

Do not put the tumble dryer under the washing machine. Verify the compatible stacking kit by checking the depth of your appliances.

7. CONTROL PANEL

7.1 Control panel description

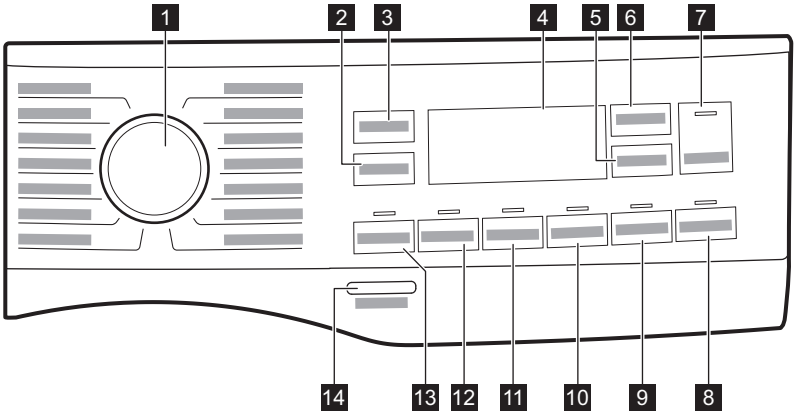

The options are not selectable with all washing programmes. Check the compatibility between options and washing programmes in the "AutoDose and options compatibility with programmes' paragraph in the "Programmes" chapter. An option can exclude another one, in this case the appliance doesn't allow you to set the incompatible options together. Make sure the screen and touch buttons are always clean and dry.

1	**Programme dial**	For selecting the desired washing programme. Refer to "Programmes" chapter for more details.
2	Centrifuga **button**	When you set a programme, the appliance automatically selects the default spin speed. Touch this button repeatedly to: • **Change the spin speed.** The display shows only the spin speeds available for the set programme. • – – – **Select No Spin option.** Set this option to deactivate all spin phases. The appliance performs the only draining phase of the selected washing programme. Set this option for very delicate fabrics. The rinses phase uses more water for some washing programmes. By means of the Centrifuga button you can also set: • **Activate the Rinse Hold option** . The water of the last rinse is not drained out to prevent the fabrics from creasing. The washing programme ends with water in the drum and the final spin phase is not performed. The display shows the indicator . The door stays locked. The drum turns regularly to reduce creasing. You must drain the water to unlock the door. Touch Avvio/Pausa button: the appliance performs the spinning phase and drains the water.

		• Activate option Silent All spinning phases (intermediate spin and final spin) are suppressed and the programme ends with water in the drum. This helps to reduce creasing. As the programme is very quiet, it is suitable for use at night time when cheaper electricity tariffs are available. In some programmes the rinses are performed with more water. The display shows the indicator . The door stays locked. The drum turns regularly to reduce creasing. You must drain the water to unlock the door. Touch the Avvio/Pausa button button: the appliance performs only the draining phase. ***The appliance empties the water out automatically after approximately 18 hours.***
3	Temp. **touch button**	When you select a washing programme, the appliance automatically proposes a default temperature. Touch this button repeatedly until the desired temperature value appears on the display. When the display shows the indicators _ _ *, the appliance does not heat the water.
4	**Display**	It provides information about the setting programme. Refer to "Display" paragraph for more details.
5	AutoDose **Fabric Softener touch button**	For activating and deactivating the automatic fabric softener loading. Refer to "The AutoDose Technology (Autodosing)" chapter for more details.
6	AutoDose **Liquid Detergent touch button**	For activating and deactivating the automatic detergent loading. Refer to "The AutoDose Technology (Autodosing)" chapter for more details.
7	Avvio/Pausa **touch button**	Touch this button to start, pause the appliance or interrupt a running programme.
Add Garments		At the beginning of the wash phase you can pause the cycle and add or remove garments. Read the "Opening the door - Adding garments" section for more details.

8	Remote start/Partenza Ritardata **touch button**	Press this button repeatedly to activate one of the two options or both. The relevant indicator comes on in the display. • Remote start Select this option to connect appliance with App. Touch this button, the display shows the indicator APP blinking for a few seconds. After touching the Avvio/Pausa button, the display shows the indicator and the Remote start is confirmed. ⓘ When touching the Avvio/Pausa button after the indicator APP stops blinking, the Remote Start is not activated, but the set programme starts. • Partenza Ritardata With this option you can delay the start of a programme in a more convenient time. Touch the button repeatedly to set the required delay. The time increases by steps of 1 hour up to 20 h. After touching the Avvio/Pausa button, the display shows the indicator and the selected delay time and the appliance begins the countdown.
9	Time Manager **touch button**	With this option you can decrease the programme duration. Refer to "Time Manager paragraph.
10	Stiro Facile **touch button**	The appliance carefully washes and spins the laundry to prevent the creases. The appliance decreases the spin speed, uses more water and adapts the programme duration to the type of laundry.
Child Lock		With this option you can prevent children from playing with the control panel. To **activate/deactivate** this option, hold the Stiro Facile button pressed until **comes on/goes off** on the display. If it is activate, when pressing any buttons the button light flashes 3 times.
11	Extra Risciacquo **touch button**	With this option you can add a few rinses according to the selected washing programme. Use this option for people with allergies to detergent residues and with sensitive skin. ***This option increases the programme duration.*** The corresponding indicator above the touch button illuminates and also stays permanently on during next cycles until this option is deactivated.
Soft Plus option		Thanks to additional functionality of this option the fabric softener is uniformly spread out in the laundry and boosting the effects on fabrics. It is suggested when you use the fabric softener. To **activate/deactivate** this option, hold the Extra Risciacquo button pressed until **comes on/goes off** on the display.

12	Macchie **touch button**	Touch this button to add the stain phase to a programme. The corresponding indicator above the touch button illuminates. By pressing this button the indicator + appears close to detergent symbol, and the appliance will automatically dose an extra amount of detergent when automatic detergent tank is enabled. 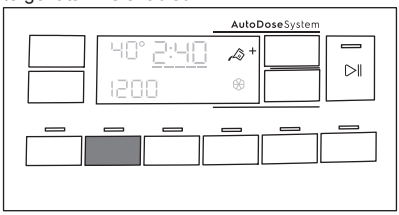 If automatic detergent tank is Off, it is possible to run this option as in traditional washing machine by filling detergent or additive in the manual compartment. If you press detergent tank button while Macchie option is active, AutoDose function is switched off, but Macchie option still remains active in manual mode. *This option increases the programme duration.*
13	Prelavaggio **touch button**	Use this option to add a pre-wash phase at 30 °C before the washing phase. The corresponding indicator above the touch button illuminates. This option is recommended for heavily soiled laundry, especially if containing sand, dust, mud and other solid particles. The extra amount of detergent will be added automatically in the prewash phase. When selecting a pre-wash phase and AutoDose is active, the appliance will automatically dose the detergent. When AutoDose is switched off, put the detergent/ additive in a dosing ball inside the drum. The options can increase the programme duration.
	Acoustic signals	This appliance is provided with different acoustic signals, that operate when: • You activate the appliance (special short tune). • You deactivate the appliance (special short tune). • You touch the buttons (click sound). • You make a wrong selection (3 short sounds). • The programme is completed (sequence of sounds for about 2 minutes). • The appliance has a malfunction (sequence of short sounds for about 5 minutes). To **deactivate/activate** the acoustic signals when the programme is completed, touch the Prelavaggio and the Macchie buttons simultaneously for about 6 seconds. *If you deactivate the acoustic signals, they continue operate when the appliance has a malfunction.*
	Operating hours counter	It is possible to visualise the total operating time of the appliance in hours, starting from the first switching on. This value will count operating time of the cycles (does not include pauses, delayed start time). To visualise this value, proceed as follows: • Press the On/Off button for a few seconds to activate the appliance. • Turn the programme dial to any programme. • Press and hold the Macchie and Extra Risciacquo buttons for some seconds. • After 3 seconds the total hours operated by the appliance are shown in the display: e.g. 1276 hours, the display shows the text Hr for 2 seconds, 12 (thousands and hundreds) for 2 seconds and 76 (tens and units). *If the procedure does not work (due to timeout, wrong programme dial position or wrong keys combination), switch the appliance off and repeat sequence from the beginning.*

Factory Reset	To return to the factory settings press and hold the Stiro Facile and Time Manager buttons for some seconds. The display will show – – – for about 5 seconds.
14 On/Off **push button**	Pressing this button for a few seconds allows to activate or deactivate the appliance. Two different tunes sound while switching the appliance on or off. *As the Stand-by function automatically deactivates the appliance to decrease the energy consumption in a few cases, you may need to activate the appliance again.* Refer to "Stand-by option" paragraph in "Daily Use" chapter for more details.

7.2 Display

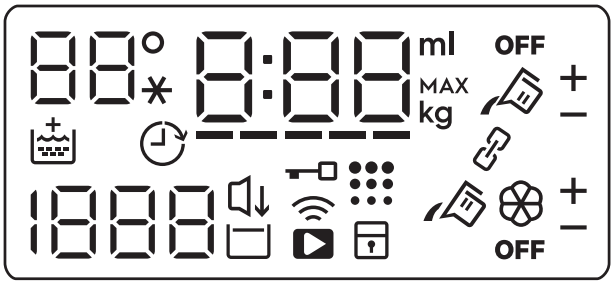

88°	The Temperature area: 88° Temperature indicator . – –* Cold water indicator.
	The Soft Plus indicator.
	Delay start indicator.
1888	The spin area: Spin speed indicator – – – No Spin indicator. Spin phase is off.
	Silent indicator.
	Rinse Hold indicator.
	Door locked indicator.
	Wi-Fi connection indicator.
	Remote Start indicator.
	Child safety lock indicator.
	Drum clean indicator. Refer to the "Cleaning the drum" section in the "Care and cleaning" paragraph for more details.

_____	Time Manager indicator.
0:00	The digital indicator can show: • Programme duration: e. g. 2:40. • Delay time: e. g. 2h. • Cycle end: 0:00. • Warning code: e.g. E21. • Error indicator: – – –. • Indication of total operating hours of the appliance. Refer to the "Operating hours counter" section in the "Control panel description" paragraph for more details. • Other setting messages.
88ml	Liquid additives quantity indicator (refer to "The AutoDose Technology (Autodosing)" chapter).
88.8kg	Maximum load indicator (refer to "The SensiCare System load detection" paragraph). **MAX** It flashes when the laundry load exceeds the maximum declared load of the selected programme.

	Linked mode indicator. It lights when both compartments are linked and filled with the same detergent. AutoDose function for softener is disable.
+ −	These indicators will appear next to detergent tank and softener tank indicators when increasing or decreasing the automatic detergent or softener dosage.
	AutoDose softener tank indicator. When it lights, appliance automatically doses the softener.
OFF	AutoDose status indicator. It lights when AutoDose function is disable.
	AutoDose detergent tank indicator. When it lights, appliance automatically doses the detergent.

7.3 Time Manager

With this option you can reduce the programme duration depending on the load size and the degree of soiling.

When you set a washing programme, the display shows the default duration and ----- dashes.

Touch Time Manager button to reduce the programme duration according to your needs. The display shows the new programme duration and a number of dashes will decrease accordingly:

---- suitable for a full load of normally soiled garments.

--- a quick cycle for a full load of lightly soiled garments.

-- very quick cycle for a smaller lightly soiled load (max. half load recommended).

- the shortest cycle to freshen up a small amount of laundry.

The Time Manager is available only with the programmes in the table.

indicator	Cotoni	Sintetici
----- 1)	■	■
----	■	■
---	■	■
-- 2)	■	■
- 2)	■	■

1) Default duration for all programmes.

2) This level of Time Manager option is not available in 90°C.

ⓘ

In some appliances the programme duration is reduced without showing any dashes.

8. BEFORE FIRST USE

ⓘ

During installation or before first use you may observe some water in the appliance. This is a residual water left in the appliance after a full functional test in the factory to ensure the appliance is delivered to customers in perfect working order and is no cause for concern.

1. Make sure that all transit bolts have been removed from the appliance.
2. Make sure that the electrical power is available and the water tap is open.
3. Make sure to fill the AutoDose tanks with liquid detergent and fabric softener . Refer to "AutoDose basic setting " paragraph in "The AutoDose technology" chapter.
4. Pour 2 litres of water inside the drum.

This action activates the drain system.

5. Set and start a programme for cotton at the highest temperature without any laundry in the drum.

This removes all possible dirt from the drum and the tub.

9. THE AUTODOSE TECHNOLOGY (AUTODOSING)

Read this chapter carefully.

9.1 Introduction

Right detergent and fabric softener dosage takes better care of the laundry and ensuring good wash performances.

Too much detergent damages your clothes and too little doesn't ensure good wash performances.

This appliance is equipped with an auto dosing system able to automatically provide the right detergent and fabric softener dosage to preserve the fabric integrity and colour brightness.

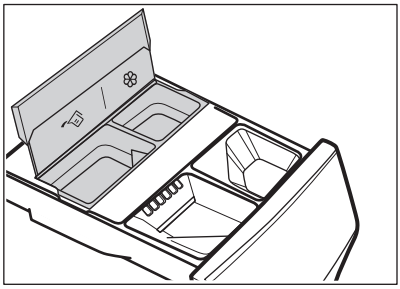

AutoDose liquid detergent tank.

AutoDose fabric softener tank.

The appliance is pre-set by the factory to suit most users habits.

Once started the programme, the appliance will automatically release the right amount of detergent and softener according to the real fabric load, if AutoDose is activated and the indicators and/or are visible on the display.

In some programmes, AutoDose is deactivated (the indicators and/or are not displayed and the display shows **OFF**) because there are garments requiring special detergents or treatments. If this is the case, pour the detergent and other treatments in the proper manual filling compartment. Please refer to "AutoDose and options compatibility with programmes" in "Programmes" chapter.

Further explanations on AutoDose and activation of advanced settings are available downloading the APP.

9.2 Detergent dispenser with AutoDose tanks and manual compartments

When using detergent and any other treatments, always follow the instructions that you find on the packaging of the detergent products. Anyway, we recommend not to exceed the maximum indicated level in each compartment (**MAX**).

If both AutoDose tanks are enabled in the set programme , liquid detergent and fabric softener are automatically loaded.

If one of the AutoDose tank or both are disabled (OFF) in the set programme, proceed by manually filling in the proper manual compartment.

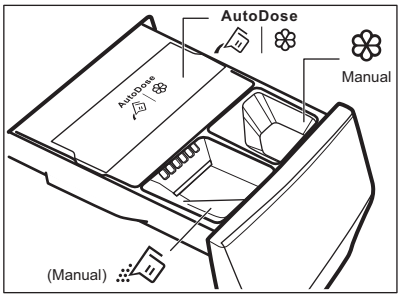

- AutoDose tanks for **liquid detergent** and **fabric softener**.

⚠ WARNING!

Do not put powder detergent in the AutoDose compartment.

- Manual compartment for washing phase: **powder or liquid detergent**.

ⓘ

When using liquid detergent, make sure that the **special container for liquid detergent** is inserted. Refer to the "Manual filling the detergent and additives" paragraph in this chapter. The liquid detergent container is supplied inside the drum.

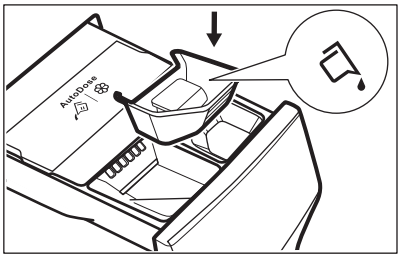

- Manual Manual compartment for **liquid** additives (fabric softener, fabric conditioner, starch).
- **MAX** Maximum level for detergent/ additives quantity.

9.3 AutoDose basic setting

The factory pre-set doses for a large load are 90 ml for detergent tank and 25 ml for fabric softener tank: the optimal configuration to meet majority of use condition. The appliance will use these settings to calculate the precise dosage for each wash based on load size.

However, under extreme conditions (very soft or very hard water) and particular type of detergent (such as super compact), we recommend to adjust the pre-set dosage by following the indication given on detergent and fabric softener container: e.g when using super compact detergent you may need to reduce the pre-set dosage considerably.

If the washing results are not satisfying or there is too much foam during washing, you may need to change the factory setting. Read in the paragraph 'AutoDose configuration mode' how to change the basic setting, but before:

1. **Identify the water hardness level.**
   Check the water hardness level in your area. The levels are generally indicated as: soft, medium and hard.
   If necessary, please contact your local water authority to check the water hardness in your area.
2. **Identify the customized detergent dosage.**
   Check the label in the detergent/fabric softener container and identify the quantity to use. For the detergent the suggested quantity of detergent is the combination of three different factors:
   - Water hardness level (see the following table);
   - Normal soil level;
   - Rated capacity of the appliance (e.g. maximum load capacity 10 kg). If the rated capacity on the detergent container label refers to lower capacity appliances, the customized dosage should be increased by 20% referring to the proposed dosage.

As example for a machine with rated capacity 8 kg, medium water, normal soil level the dosage is recognised by the crossing in the detergent label dosages.

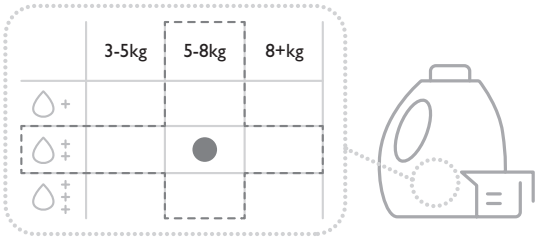

Water hardness levels

Levels	Water hardness range				
	°f[1)]	°d[2)]	°e[3)]	mmol/l	ppm
Soft	<15	<8	<10	<1.4	<140
Medium[4)]	15 - 25	8 - 14	0 - 17	1.5 - 2.5	150 - 250
Hard	>25	>14	>17	>2.5	>250

1) French degrees
2) German degrees
3) English degrees
4) Factory setting, able to satisfy most of the use conditions.

9.4 AutoDose configuration mode

Enter the AutoDose configuration mode before proceeding with any programme setting. The configuration mode may cancel temporary settings .

1. Press the On/Off button for a few seconds to activate the appliance.
2. Wait about 10 seconds for appliance internal check.
3. Turn the programme dial to select a washing programme.
4. To enter in configuration mode, hold pressed the Temp. and the Centrifuga buttons simultaneously for a few seconds until SEt and the blinking detergent tank and softener tank indicators appear in the display. After 10 seconds without interacting with control panel the appliance exits the configuration mode.

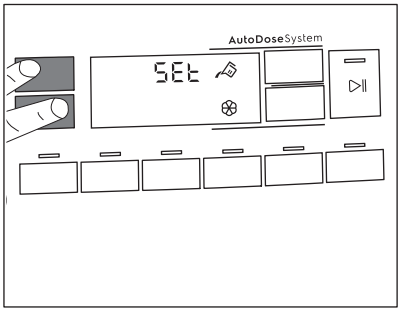

5. Touch related tank buttons to toggle function off and on. The display shows OFF when a tank is disabled or shows tank indicator when it is enabled.

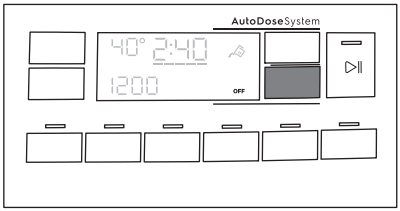

6. To set basic dosage touch related tank buttons until default dosage laundry product and two arrows on bottom of display appear. Touch the Temp. button repeatedly to decrease the dosage and the Centrifuga button to increase it: minimum step is 1 ml (each single step) or 10 ml (when button is hold pressed).

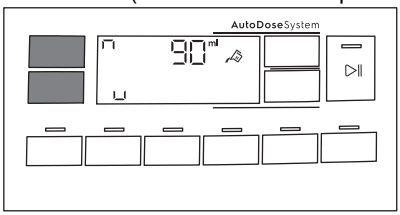

7. After about 10 seconds the display returns to the programme information screen or hold pressed the Temp. and the Centrifuga buttons again to exit immediately.

9.5 Filling the detergent and additives on AutoDose system

ⓘ

Please read "Detergents and other treatments" in "Hints and tips" chapter.

ⓘ

We recommend that you do not exceed the maximum indicated level (**MAX**).

1. Open the detergent dispenser.

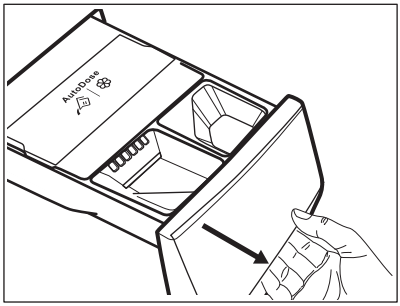

2. Lift up the AutoDose cover lid.

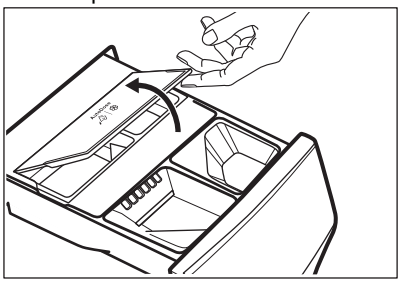

3. Gently pour only liquid detergent in the AutoDose detergent tank. Fill up to the maximum indicated level **MAX**.

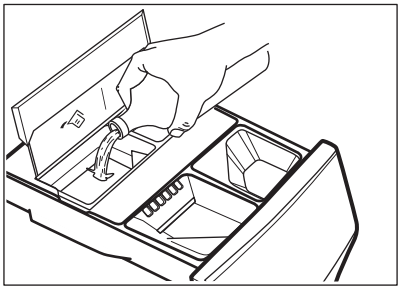

4. Gently pour only liquid softener in the AutoDose fabric softener tank. Fill up to the maximum indicated level **MAX**.

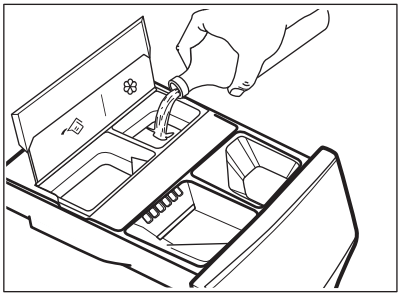

5. Lower down the AutoDose cover lid.

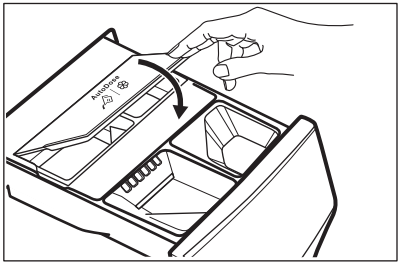

6. Gently close the detergent dispenser, till click engagement.

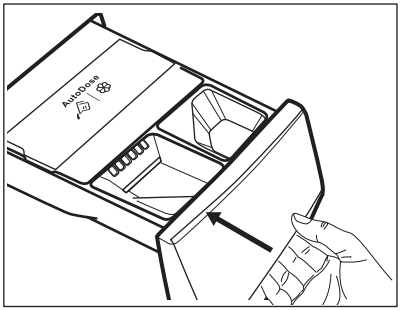

9.6 AutoDose low level indication

Do not refill the AutoDose tanks unless appliances indicates that one or both tanks are empty.

When the activated tank reaches a low level of detergent, related indicator blinks slowly and continuously on the display.

It will stop blinking when the compartment is refilled.

If tank is not refilled, once a programme has started, the indicator will stop blinking and stay steadily lit. Once the programme is finished, it will start blinking again.

Unless AutoDose is turned OFF, if a compartment has reached low level, the set dosage for that compartment will be shown by the display for a few seconds each time the drawer is opened, to remind refill is needed.

If in both tanks detergent level is low, both indicators blink, but only the set dosage for detergent will be displayed.

If the tanks are filled before the appliance is powered on for the first time, the AutoDose indicator will not blink.

⚠ CAUTION!

The tanks refill must be carried out with the same brand and type of detergent/ fabric softener/additive used before, otherwise clean the tanks before refilling.

9.7 Switching from AutoDose to manual dosing

It is possible to disable AutoDose function for one or both tanks by pressing related button symbol.

Example:

- To switch Fabric Softener tank off, press the softener button until the display shows **OFF**.

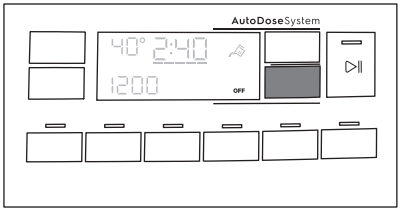

- If you need to use different detergent than ones present in AutoDose tanks, you could switch Detergent tank off by pressing the detergent button until the display shows **OFF**.

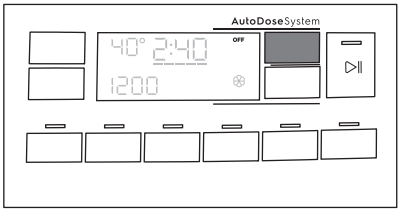

9.8 Deactivating the AutoDose

If you want to use the machine ONLY manually, you can deactivate the Autodose functionality. Once you have entered the AutoDose configuration mode by a long press of Temp. and the Centrifuga buttons:

1. Tap on the detergent button or the softener button until display shows OFF : the AutoDose is excluded completely for related tank or both.

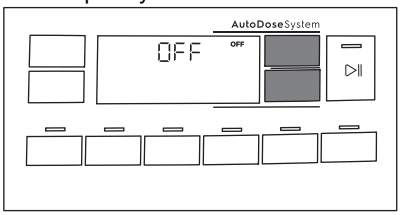

2. After about 10 seconds the display returns to the programme information screen.

9.9 Manual filling the detergent and additives

You may need to use a different detergent or fabric softener than the ones used in the AutoDose tanks. First, make sure that the AutoDose tanks are disabled and then pour the detergent and/or other treatments in the manual compartments.

Do not exceed the maximum indicated level (**MAX**).

1. Open the detergent dispenser.

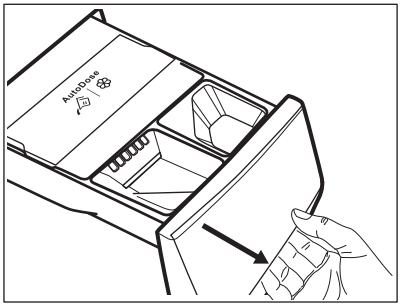

2. Put the powder detergent in the compartment . When using liquid detergent, refer to "Manual filling the liquid detergent".

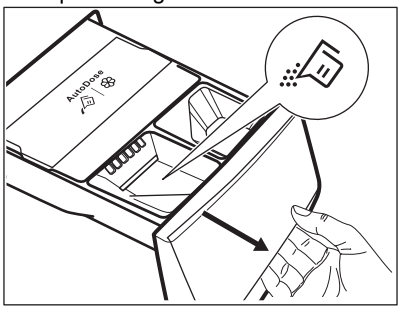

3. If desired, pour the fabric softener in the compartment Manual .

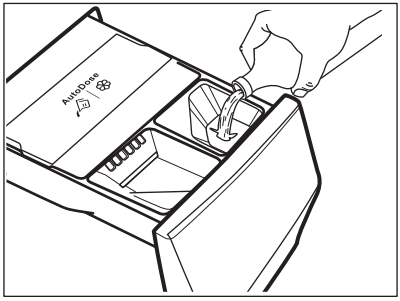

4. Gently close the detergent dispenser, till click engagement.

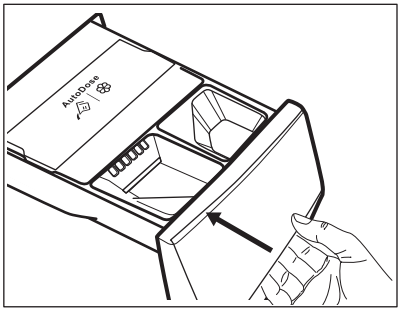

Manual filling the liquid detergent

1. Insert the container for liquid detergent.

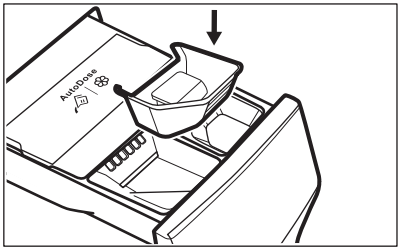

2. Pour the liquid detergent in the compartment .

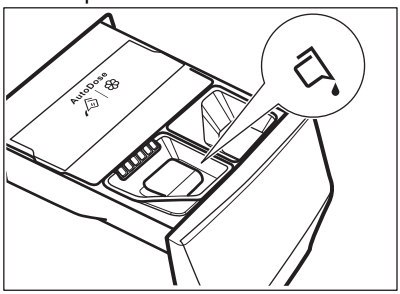

3. Gently close the detergent dispenser, till click engagement.

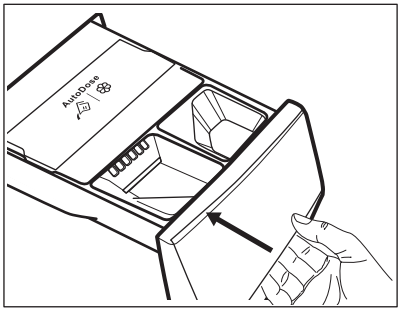

If the machine has not been used for more than 4 weeks with filled tanks, detergent/softener can become viscous or dry out. It is needed to clean the drawer as indicated in 'Care and Cleaning' chapter.

9.10 Drawer open indication

When a programme is running, the detergent drawer must always be closed.

A sensor in the drawer detects if the drawer is open (or not properly closed) while the programme is running. In such case, the appliance will immediately be paused.

If you press the Avvio/Pausa ▷‖ button, an error sound is generated and everything in the display will turn off except the AutoDose indicators remain lit for a few seconds. Then the display returns to the previous paused state.

This will happen even if the user turned AutoDose off.

To restart the programme, ensure the drawer is properly closed and press Avvio/Pausa ▷‖ button.

10. PROGRAMMES

10.1 Programme Chart

Programme Default temperature Temperature range	Reference spin speed Spin speed range [rpm]	Maximum load	Programme description (Type of load and level of soiling)
Cotoni 40 °C 90 °C - Cold	1400 rpm (1400- 400)	10 kg	White and coloured cotton fabrics. Ideal for normal and heavy soil.
Sintetici 30 °C 60 °C - Cold	1200 rpm (1200 - 400)	4 kg	Synthetic items or mixed fabric items. Normal soil.
Delicati 30 °C 40 °C - Cold	800 rpm (1200- 400)	2 kg	Delicate fabrics such as acrylics, viscose and mixed fabrics requiring gentler washing. Normal soil.
Lana 40 °C 40 °C - Cold	1200 rpm (1200- 400)	1,5 kg	Machine washable wool, hand washable wool and other fabrics with «hand washing» care symbol **1)**.
Rapido 20' 30 °C 40 °C - 30 °C	1200 rpm (1400- 400)	3 kg	**Synthetic and mixed fabric** items. Lightly soiled items and items to freshen up.
Risciacquo	1400 rpm (1400- 400)	10 kg	All fabrics, except woollens and very delicate fabrics. Programme for rinsing and spinning the laundry. The default spin speed is the one used for cotton programmes. Reduce the spin speed accordingly to the type of laundry. If necessary, set the Extra Risciacquo option to add rinses. With a low spin speed the appliance performs delicate rinses and a short spin.
Centrifuga/Scarico	1400 rpm (1400 -400)	10 kg	To spin the laundry and to drain the water in the drum. All fabrics, except woollens and delicate fabrics.
Jeans 30 °C 40 °C - Cold	800 rpm (1200 - 400)	4 kg	Special programme for Denim clothing with delicate washing phase to minimize colour fading and marks. For better care a reduced load size is recommended.
Sport 30 °C 40 °C - Cold	1200 rpm (1200 - 400)	4 kg	**Mixed fabric sportswear**. Lightly soiled items or items to refresh.
Seta 30 °C	800 rpm (800 - 400)	0,5 kg	Machine and hand washable silk and other delicate fabrics. Drum movements are so gentle that is possible to treat even very delicate garments. Run a complete wash and dry cycle to reduce creases.
Piumoni 30 °C 60 °C - Cold	800 rpm (800 - 400)	3 kg	Special programme for synthetic or feather and down filled blanket, duvet, bedspread and so on. Use liquid delicate detergent, like wool detergent.

Programme Default temperature Temperature range	Reference spin speed Spin speed range [rpm]	Maximum load	Programme description (Type of load and level of soiling)
Outdoor 30 °C 40 °C - Cold	1200 rpm (1200- 400)	2,5 kg **2)** 1 kg **3)**	ⓘ Do not use fabric softener and make sure that there is no softener residue in the detergent dispenser. Outdoor clothing, technical, sport fabrics, waterproof and breathable jackets, shell jackets with a removable fleece or inner insulation. The recommended laundry load is 2,5 kg. This programme can also be used as water-repellent restoring cycle, specifically tailored for treating clothes with a hydrophobic coating. To perform the water-repellent restoring cycle, proceed as follows: • Pour the washing detergent in the compartment . • Pour a special water-repellent restorer for fabric in the drawer compartment for fabric softener Manual . • Reduce the laundry load to 1 kg. ⓘ To further improve the water-repellent restoring action, dry the laundry in a tumble dryer by setting the Outdoor drying programme (if available and if the garment care label permits tumble drying).
Hygiène 60 °C	1400 rpm (1400 - 400)	10 kg	**White cotton items.** This high-performance wash program combined with steam vapour, removes more than 99,99% of bacteria and viruses **4)** keeping the temperature above 60°C throughout the washing phase; with an additional action on the fibers thanks to a vapour phase, an enhanced rinsing phase ensures a proper removal of detergent and micro-organism residues. This program ensures also a proper reduction of pollens/allergenic items.

Programme Default temperature Temperature range	Reference spin speed Spin speed range [rpm]	Maximum load	Programme description (Type of load and level of soiling)
Eco 40-60 40 °C **5)**	1400 rpm (1400- 400)	10 kg	White cotton and fast-coloured cotton. Normally soiled items. The energy consumption decreases and the time of the washing programme is extended, ensuring good washing results.

1) During this cycle the drum rotates slowly to ensure a gentle wash. It can seem that the drum doesn't rotate or doesn't rotate properly, but this is normal for this programme.

2) Washing programme.

3) Washing programme and waterproofing phase.

4) Tested for Staphylococcus aureus, Enterococcus faecium, Candida albicans, Pseudomonas aeruginosa and MS2 Bacteriophage in external test performed by Swissatest Testmaterialien AG in 2021 (Test Report No. 202120117).

5) According to Commission Regulation EU 2019/2023, this programme at 40ºC is able to clean normally soiled cotton laundry declared to be washable at 40ºC or 60ºC, together in the same cycle.

For the reached temperature in the laundry, the programme duration and other data, please refer to 'Consumption Values' chapter.
The most efficient programmes in terms of energy consumption are generally those that perform at lower temperatures and longer duration.

Programme options compatibility

Options	PROGRAMME	Cotoni	Sintetici	Delicati	Lana	Rapido 20'	Risciacquo	Centrifuga/Scarico	Jeans	Sport	Seta	Piumoni	Outdoor	Hygiène	Eco 40-60
AutoDose Detergent		■	■	■		■			■	■			■	■	■
AutoDose Fabric Softener		■	■	■	■	■	■		■	■	■	■		■	■
Centrifuga		■	■	■	■	■	■	■	■	■	■	■	■	■	■
No Spin		■	■	■	■	■	■	■	■	■	■	■	■	■	
Rinse Hold		■	■	■	■		■		■	■			■	■	■

Options	PROGRAMME	Cotoni	Sintetici	Delicati	Lana	Rapido 20'	Risciacquo	Centrifuga/Scarico	Jeans	Sport	Seta	Piumoni	Outdoor	Hygiène	Eco 40-60
Silent		■	■	■					■						
Prelavaggio		■	■							■					
Macchie 1)		■	■						■					■	
Extra Risciacquo		■	■	■			■		■	■			■	■	
Soft Plus		■	■	■					■			■		■	
Stiro Facile		■	■						■						
Time Manager		■	■												
Partenza Ritardata		■	■	■	■	■	■	■	■	■	■	■	■	■	■

1) This option is not available with temperature lower than 40 °C.

Suitable detergents for washing programme

	Cotoni	Sintetici	Delicati	Lana	Rapido 20'	Jeans	Sport	Seta	Piumoni	Outdoor	Hygiène	Eco 40-60
Universal powder 1)	▲	▲	--	--	--	--	--	--	--	--	▲	▲
Liquid Universal	▲	▲	--	--	▲	--	▲	--	--	--	▲	▲
Liquid for coloureds	▲	▲	--	--	▲	--	▲	--	--	--	--	▲
Delicates woollens	--	--	▲	▲	--	▲	--	▲	▲	▲	--	--

	Cotoni	Sintetici	Delicati	Lana	Rapido 20'	Jeans	Sport	Seta	Piumoni	Outdoor	Hygiène	Eco 40-60
Special	--	--	▲	▲	--	▲	▲	▲	▲	▲	▲	--

1) At temperature higher than 60 °C the use of powder detergent is recommended.

▲ = Recommended

-- = Not recommended

10.2 Woolmark Wool Care - Blue



The wool wash cycle of this machine has been approved by The Woolmark Company for the washing of wool garments labelled as «hand wash» provided that the products are washed according to the instructions on the garment label and those issued by the manufacturer of this washing machine.
M1512
The Woolmark symbol is a Certification mark in many countries.

11. THE APP AND ADDITIONAL HIDDEN PROGRAMMES

Our app provides you with a wide choice of additional hidden programmes. After pairing your smart device with the appliance you will be able to choose the programme that suits your needs most. In the App you can find a complete description of each programme.

Pulizia	Towels	Baby
Curtains	Fleece	Business Shirts
Bed Linen	Microfibre	Working Clothes

ⓘ

Programme names are subject to change depending on market requirements without notice.

12. WI-FI - CONNECTIVITY SETUP

This chapter describes how to connect the smart appliance to the Wi-Fi network and to link it to mobile devices.

By this functionality you can receive notifications, control and monitor your appliance from your mobile devices.

The Wi-Fi functionality is off as factory default setting.

To connect the appliance to enjoy the full range of features and services you need:

- Wireless network at home with internet connection enabled.

- Mobile device connected to wireless network.

Wi-Fi module parameters	
Frequency	2.412 - 2.472 GHz for European market
Protocol	IEEE 802.11b/g/n
Max Power	<20 dBm
Encryption	WPA, WPA2, WPA3

12.1 QR code on rating plate

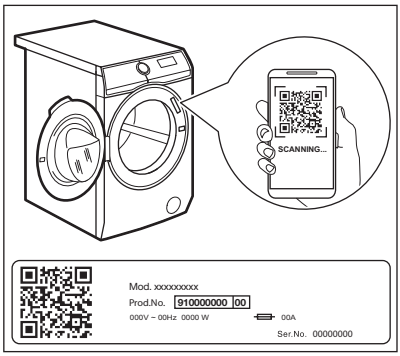

QR code can be used in two ways:

- Scan the QR code with the built-in camera app to download our app from the App store on your smart device and follow the required steps.
- Pairing your smart device with appliance to simplify the process. Scan the QR code with QR code scanner built-in our app.

12.2 Installing and configuring the App

The App allows you to control your laundry through a mobile device.
It contains a large number of programmes, useful features and product information tailored perfectly to the appliance.
Through the app you can select the programmes already available from the appliance control panel, plus unlock additional programmes available only from a mobile device.
Additional programmes can change over the time along with new versions of the app.
It's personalized laundry care - all from your mobile device.

When connecting the appliance to the application, stand near it with your mobile device.

Make sure that your mobile device is connected to the wireless network.

1. Go to the App Store on your smart device or scan QR code (*see 'QR code on rating plate' paragraph*).
2. Download and install our app.
3. Make sure you started a Wi-fi connection in the appliance. If not, read the next paragraph 'Configuring the appliance wireless connection'.
4. Start the application. Select the country and language and login with Your email and password. If you do not have an account, create a new one following the instructions in the App.
5. Follow the instructions on the App for the appliance registration and configuration.

12.3 Configuring the washing machine wireless connection

1. Press the On/Off button for a few seconds to activate the appliance. Wait about 10 seconds before proceeding with wireless configuration.
2. Select a programme by turning the programme dial.

3. Press and hold the and the buttons simultaneously for a few seconds until a 'click' sounds. Release the buttons. On appears on the display for 5 seconds and the indicator starts blinking.

The wireless module begins starting up.

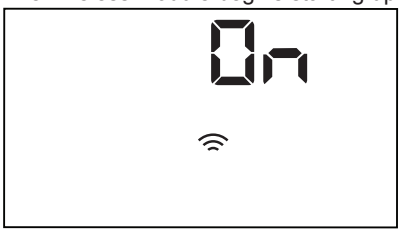

Make sure that your App is ready for connection.

4. After a few seconds, AP (**Access Point**) appears on the display.

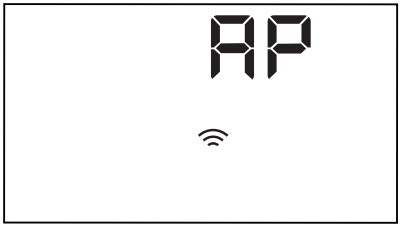

The access point will be open for about 5 minutes.

As long as the appliance is activated, it will keep trying to connect with saved credentials until the Wi-Fi is deactivated or resets the credentials.

5. Configure App on your smart device and follow the instructions to connect the appliance to your Wi-Fi network.
6. If the connectivity is configured, when the programme information screen returns, the indicator is on the display.

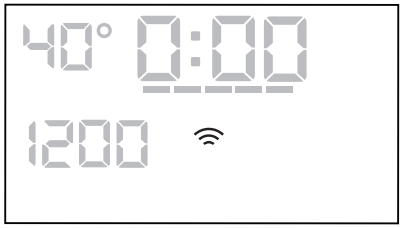

Every time you switch the appliance on, the appliance takes few seconds to connect to the network automatically. When the indicator stops blinking the connection is ready.

To switch the wireless connection off after the connectivity is configured, press and hold the and the buttons simultaneously for a few seconds until the first acoustic signal. Release the buttons. OFF appears on the display for a few seconds.

If you switch the appliance off and on again, the wireless connection is automatically off.

To remove the wireless credentials, press and hold the and the buttons simultaneously for a few seconds until the second acoustic signal: --- appears on the display.

12.4 Remote Start

The Remote Start enables you to start a cycle in remote control.

The Remote Control activates automatically when you press the Avvio/ Pausa button to start the programme, but it is also possible to start a washing programme remotely.

When the App is installed and the wireless connection is complete, you can activate the Remote Start:

1. Touch the Remote start button and the indicator APP appears on the display for a few seconds.

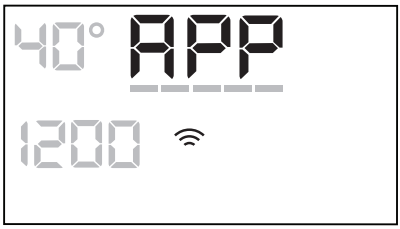

2. Touch the Avvio/Pausa button to activate the Remote Start before the indicator APP stops blinking.

The indicators and appear on the programme summary screen and the door is locked. Now it is possible to start the programme remotely.

When touching the Avvio/Pausa button after the indicator APP stops blinking, the Remote Start is not activated, but the set programme starts.

To remove the Remote Start, tap on the Remote start button and confirm by pressing the Avvio/Pausa button.

The reset position • deactivates the Remote Start.

12.5 Over-the-air update

The App may propose an update for your appliance.

The update is accepted via App only.

If a programme is running, the App notifies that the update will start at the end of the programme.

During the update, the appliance shows UPd in the display.

Do not switch off or unplug the appliance during update.

The appliance will be usable again at the end of the update, without any notification about successful update.

If an error occurs, the appliance shows Err in the display: just press any buttons or turn the knob to return to normal use.

12.6 Wi-Fi Always On

The Wi-Fi Always On function is available in the App.

This function keeps the appliance connected to the network even when the appliance is turned off.

The indicator goes on and off intermittently (1 second on , 5 seconds off).

It is possible to turn the appliance on by pressing the On/Off button or through the App.

The Wi-Fi Always On function may affect your energy consumption.

13. DAILY USE

WARNING!
Refer to Safety chapters.

13.1 Activating the appliance

1. Connect the mains plug to the mains socket.
2. Open the water tap.
3. Press the On/Off button for a few seconds to activate the appliance.

A short tune sounds.

13.2 Loading the laundry

1. Open the appliance door.
2. Empty the pockets and unfold the items before you put them in the appliance.

3. Put the laundry in the drum, one item at a time.

Do not put too much laundry in the drum.

4. Close the door firmly.

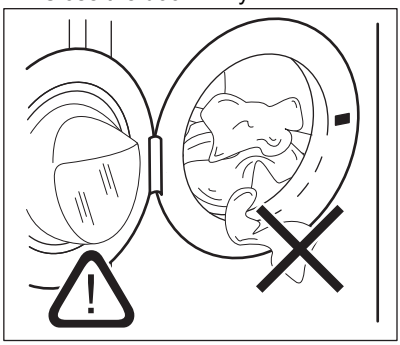

⚠ CAUTION!

Make sure that no laundry gets caught between the seal and the door to avoid risk of water leakage and damage to the laundry.

ⓘ

Washing heavily oiled, greasy stains could cause damage to rubber parts of the washing machine.

13.3 Setting a programme

ⓘ

If you wish to change the automatic detergent or fabric softener dosage, enter the AutoDose configuration mode before proceeding with any programme setting. The configuration mode may cancel temporary settings. Please refer to "AutoDose configuration mode" paragraph in "The AutoDose Technology (Autodosing)" chapter.

1. Turn the programme dial to select the desired washing programme.

The indicator of the Avvio/Pausa ▷‖ button flashes.

The display shows an indicative programme duration.

2. To change the temperature and/or the spin speed, touch the related buttons.
3. If desired, set one or more options by touching the related buttons. The related indicators illuminate on the display and the given information changes accordingly.

ⓘ

If a selection is **not possible** an acoustic signal sounds and the display shows – – –.

13.4 Starting a programme

ⓘ

Make sure that the detergent dispenser is firmly closed, otherwise programme won't start.

1. Touch the Avvio/Pausa ▷‖ button to start the programme. It is not possible to start the programme when the indicator of the button is off and doesn't flash (e.g. programme dial on a wrong position).

The related indicator stops flashing and stays on.

2. The programme starts, the door is locked. The display shows the indicator ⊸▯ and the 👕+ symbol appears to indicate that it is still possible to stop the cycle and add garments.

ⓘ

The drain pump can operate shortly before the appliance fills water.

13.5 Starting a programme with the delay start

1. Touch the Partenza Ritardata button repeatedly until the display shows the desired delay time.
2. Touch the Avvio/Pausa ▷‖ button. The appliance door locks and starts the countdown of the delay start. The display shows the indicator ⊸▯.

When the countdown is completed, the programme starts automatically.

Cancelling the delay start after the countdown has started

To cancel the delay start:

1. Touch the Avvio/Pausa ▷‖ button to pause the appliance. The related indicator flashes.
2. Touch the Partenza Ritardata button repeatedly until the display shows 0.
3. Touch the Avvio/Pausa ▷‖ button again to start the programme immediately.

Changing the delay start after the countdown has started

To change the delay start:

1. Touch the Avvio/Pausa ▷‖ button to pause the appliance. The related indicator flashes.
2. Touch thePartenza Ritardata button repeatedly until the display shows the desired delay time.
3. Touch the Avvio/Pausa ▷‖ button again to start the new countdown.

13.6 The SensiCare System load detection

ⓘ

The programme duration in the display is referred to a **medium/high load**.

After touching the Avvio/Pausa ▷‖ button, the maximum declared load indicator goes off, the SensiCare System starts the laundry load detection:

1. The appliance detects the load in the first 30 seconds. In the programmes where Time Manager is available, during this phase the indicator **kg** is blinking and Time Manager bars ---- placed below the time digits play a simple animation. The drum rotates shortly.
2. The programme duration could be adjusted accordingly and could increase or decrease. After further 30 seconds, the water filling starts.

At the end of the load detection, **in case of drum overload**, the indicator **MAX** is flashing in the display: in this case, for 30 seconds, it is possible to pause the appliance and remove the exceeding garments.

Once removed the exceeding garments, touch the Avvio/Pausa ▷‖ button to start the programme again. The SensiCare phase can be repeated up to three times (see point 1).

Important! If the laundry amount will not be reduced, the washing programme starts anyway, despite the overload. In this case, it will be not possible to guarantee the best washing results.

ⓘ

About 20 minutes after the programme start, the programme duration could be adjusted again depending on the capacity of water absorption of the fabrics.

ⓘ

The SensiCare detection is carried out with complete washing programmes only and if the programme duration has not been reduced by means of the Time Manager button.

ⓘ

The SensiCare is not available with some programmes, such as Lana, Risciacquo, Centrifuga and programmes with short cycles.

13.7 Interrupting a programme and changing the options

When the programme is running, you can change **only some** options:

1. Touch the ▷‖ button.

The related indicator flashes.

2. Change the options. The given information in the display changes accordingly.
3. Touch the button ▷‖ again.

The washing programme continues.

13.8 Cancelling a running programme

1. Press the On/Off button to cancel the programme and to deactivate the appliance.
2. Press the On/Off button again to activate the appliance.

Now, you can set a new washing programme.

If the SensiCare phase is already carried out and the water filling is already started, the new programme starts **without repeating the SensiCare phase**. The water and the detergent are not drained out in order to avoid waste. The display shows the maximum duration of the programme, updating it about 20 minutes after the starting of the new programme.

There is also an alternative way of cancelling:
1. Rotate the selector knob to the "Reset" position • .
2. Wait for 1 second. The display shows ––– .

Now, you can set a new washing programme.

13.9 Opening the door - Adding garments

If the temperature and level of the water in the drum are too high and/or the drum is still rotating you should not open the door.

While a programme or the delay start operates, the appliance door is locked. The display shows the indicator.

To add or to remove garments:

1. Touch the Avvio/Pausa button.

In the display the related door lock indicator goes off.

2. Open the appliance door. If necessary, add or remove the items. Close the door and touch the Avvio/Pausa button.

The programme or the delay start continues.

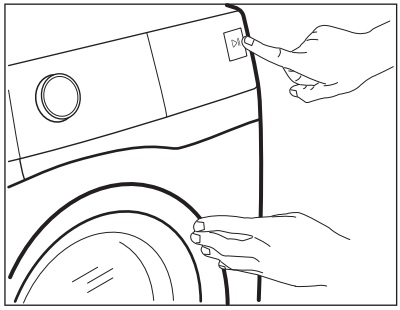

13.10 End of the programme

- The appliance stops automatically.
- The acoustic signals operate (if they are active).
- In the display comes on.
- The indicator of the Avvio/Pausa button goes off. The door locked goes off and the door unlocks.
- Press the On/Off button for some seconds to deactivate the appliance.

After some minutes from the end of the programme, the energy saving function deactivates the appliance automatically.

1. Remove the laundry from the appliance.
2. Make sure that the drum is empty.
3. Keep the door and the detergent dispenser slightly ajar to prevent mildew and odours.

13.11 Draining water out after end of cycle

If you have chosen a programme or an option that does not empty out the water of the last rinse, the programme is completed, but:

- The time area shows and the display shows the door locked .
- The drum still turns at regular intervals to prevent creases in the laundry.
- The door stays locked.
- You must drain the water to open the door:

1. If necessary, touch the Centrifuga button to decrease the spin speed proposed by the appliance.
2. Press the Avvio/Pausa button:
   - If you have set Rinse Hold the appliance drains the water and spins.
   - If you have set Silent the appliance only drains the water

The option indicator Rinse Hold and Silent disappears.

3. When the programme is completed and the door locked indicator goes off, you can open the door.
4. Press the On/Off button for a few seconds to deactivate the appliance.

13.12 Stand-by function

The Stand-by function automatically deactivates the appliance to reduce the energy consumption when:

- You do not use the appliance for 5 minutes when no programme is running. Press the button On/Off to activate the appliance again.
- 5 minutes after the end of the washing programme. Press the On/Off button to activate the appliance again. You can to set now a new cycle.

If the dial is rotated to the "Reset" position •, the appliance automatically turns off in 30 seconds.

If you set a programme or an option that ends with water in the drum, the Stand-by function **doesn't deactivate** the appliance to remind you to drain the water.

The remote control inhibits the Stand-by option, but after 15 minutes the appliance enters in Network Stand-by mode and the display shows the indicator only.

14. HINTS AND TIPS

WARNING!
Refer to Safety chapters.

14.1 The laundry load

- Divide the laundry into: white, coloured, synthetics, delicates and wool.
- Follow the washing instructions on the laundry care labels.
- Do not wash white and coloured items together.
- Some coloured items can discolour with the first wash. We recommend that you wash them separately for the first couple of times.
- Turn multilayered fabrics, wool and items with printed illustrations inside out.
- Pre-treat stubborn stains.
- Wash stubborn stains with a special detergent.
- Be careful with curtains. Remove the hooks and put the curtains in a washing bag or pillowcase.
- A very small load can cause balance problems with the spin phase leading to excessive vibration. If this occurs:
  a. interrupt the programme and open the door (refer to "Daily Use" chapter);
  b. manually redistribute the load so that the items are spaced evenly around the tub;
  c. press the Avvio/Pausa button. The spin phase continues.
- Button up pillowcases, close zippers, hooks and poppers. Tie up belts, cords, shoelaces, ribbons and any other loose elements.
- Do not wash laundry without hems or with cuts. Use a washing bag to wash small and/or delicate items (e.g. underwired bras, belts, tights, shoelaces, ribbons, etc.).

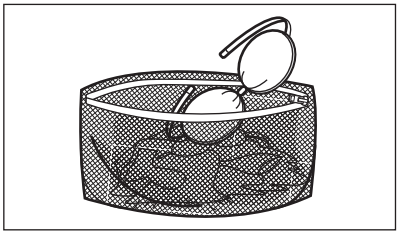

- Empty pockets and unfold the items.

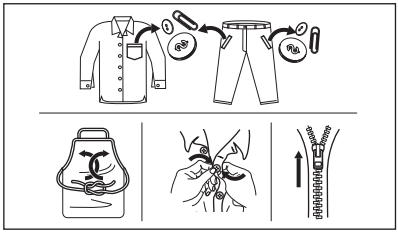

14.2 Stubborn stains

For some stains, water and detergent is not sufficient.

We recommend that you pre-treat these stains before you put the items in the appliance.

Special stain removers are available. Use the special stain remover that is applicable to the type of stain and fabric.

14.3 Detergent type and quantity

The choice of detergent and use of correct quantities not only affects your wash performance, but also helps to avoid waste and protect the environment:

- Use only detergents and other treatments specially made for washing machines. First, follow these generic rules:
  - powder detergents for all types of fabric, excluding delicate. Prefer powder detergents containing bleach for whites and laundry sanitization,
  - liquid detergents, preferably for low temperature wash programmes (60 °C max) for all types of fabric, or special ones for woollens only.
- The choice and quantity of detergent will depend on: type of fabric (delicates, woollens, cottons, etc), the colour of clothes, size of the load, degree of soiling, wash temperature and hardness of the water used.
- Follow the instructions that you find on packaging of the detergents or other treatments without exceeding the indicated maximum level (**MAX**).
- Do not mix different types of detergents.
- Use less detergent if:
  - you are washing a small load,
  - the laundry is lightly soiled,
  - there is large amounts of foam during washing.
- When using detergent tabs or pods, always put them inside the drum, not in the detergent dispenser.

Insufficient detergent may cause:

- unsatisfactory washing results,
- the wash load to turn grey,
- greasy clothes,
- mould in the appliance.

Excessive detergent may cause:

- sudsing,
- reduced washing effect,
- inadequate rinsing,
- a greater impact for the environment.

14.4 Ecological hints

To save water, energy and to help protect the environment, we recommend that you follow these tips:

- **Normally soiled laundry** may be washed **without prewash** in order to save detergent, water and time (the environment is protected too!).
- Loading the appliance to the **maximum capacity indicated for each programmes helps to reduce energy and water consumption**.
- With adequate pre-treatment, stains and limited soiling can be removed; the laundry can then be washed at a lower temperature.
- To use the correct quantity of detergent, refer to the quantity suggested by the detergent producer and check the water hardness of you domestic system. Refer to 'Water hardness'.
- Set the **maximum possible spin speed** for the selected washing programme **before drying your laundry in a tumble dryer**. This will save energy during drying!

14.5 Water hardness

If the water hardness in your area is high or moderate, we recommend that you use a water softener for washing machines. In areas where the water hardness is soft it is not necessary to use a water softener.

To find out the water hardness in your area, contact your local water authority.

Use the correct quantity of water softener. Follow the instructions that you find on the packaging of the product.

15. CARE AND CLEANING

⚠ **WARNING!**

Refer to Safety chapters.

15.1 Periodic cleaning schedule

Periodic cleaning helps to extend the life of your appliance.

After each cycle, keep the door and the detergent dispenser slightly ajar to get air circulation and dry the humidity inside the appliance: this will prevent mildew and odours.

If the appliance is not used for a long time: close the water tap and unplug the appliance.

Indicative periodic cleaning schedule:

Descaling	Twice a year
Maintenance wash	Once a month
Clean door seal	Every two months
Clean drum	Every two months
Clean detergent dispenser and AutoDose tanks	Twice a year
Clean drain pump filter	Twice a year
Clean the inlet hose and the valve filter	Twice a year

The following paragraphs explain how you should clean each part.

15.2 Removing foreign objects

ⓘ

Make sure that pockets are empty and all loose elements are tied up before running your cycle. Refer to "The laundry load" in "Hints and tips".

Remove any foreign objects (such as metal clip, buttons, coins, etc) that you may find in the door seal, the filters and the drum. Refer to "Door seal with double lip trap", "Cleaning the drum", "Cleaning the drain pump" and "Cleaning the inlet hose and the valve filter" paragraphs. If necessary, please contact the Authorised Service Centre.

15.3 External cleaning

Clean the appliance with mild soap and warm water only. Fully dry all the surfaces. Do not use a scouring pads or any scratching material.

⚠ **CAUTION!**

Do not use alcohol, solvents or chemical products.

⚠ **CAUTION!**

Do not clean the metal surfaces with chlorine-based detergent.

15.4 Descaling

ⓘ

If the water hardness in your area is high or moderate, we recommend that you use a water descaling product for washing machines.

Regularly examine the drum to check for limescale.

Regular detergents already contain water softening agents, but we recommend to run a cycle with an empty drum and a descaling product.

ⓘ

Always follow the instructions that you find on the packaging of the product.

15.5 Maintenance wash

The repeated and prolonged use of low temperature programmes can cause detergent deposits, fluff residues, bacterial growth inside the drum and the tub. This could generate bad odours and mildew. To eliminate these deposits and clean the inner part of the appliance, run a maintenance wash regularly (at least once a month).

ⓘ

Refer to "Cleaning the drum" paragraph.

15.6 Door seal with double lip trap

This appliance is designed with a **self cleaning draining system**, allowing light fluff fibers that fall off the clothes to be drained out with the water. Regularly examine the seal. Coins, buttons, other small items can be recovered at the end of the cycle.

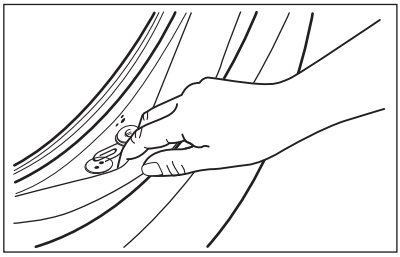

Clean it when needed, using ammonia cream cleanser agent without scratching the seal surface.

ⓘ

Always obey the instructions that you find on the packaging of the product.

Check and remove objects (if there are any) that could be trapped in the fold.

Make sure that no laundry remains between the seal and the door.

Use a moist cloth to wipe off any dirt or water residue left behind in the door seal after completion of program cycle.

15.7 Cleaning the drum

Regularly examine the drum to prevent unwanted deposits.

Rust deposits in the drum may occur due to rusting foreign body in the washing or tap water containing iron

Clean the drum with special products for stainless steel.

ⓘ

Always follow the instructions that you find on the packaging of the product.
Do not clean the drum with acidic descaling products, scouring products containing chlorine or iron or steel wool.

For a thorough clean:

1. Remove all laundry from the drum.
2. Deactivate AutoDose function for detergent and softener.
3. Run a Cotoni programme with the highest temperature. If your appliance can be connected to Wi-Fi, the special programme Pulizia is also downloadable through the APP.
4. Add a manually small quantity of powder detergent or a specific product into the empty drum, in order to rinse out any left residues.

ⓘ

Occasionally, at the end of a cycle the display may show the icon ⁘: this is a recommendation to perform the “drum cleaning”. Once the drum cleaning has been performed, the icon disappears.

15.8 Cleaning the detergent dispenser and the AutoDose tanks

⚠ **CAUTION!**

If you change detergent type as brand, concentration, and thickness, then it is suggested to clean the detergent drawer.

ⓘ

Before cleaning, make sure that the all compartments are empty.

To prevent possible deposits of dried detergent, clotted fabric softener, formation of mould in the detergent dispenser and/or clotted liquid additives in the AutoDose tanks, **once in a while carry out the following cleaning procedure**:

1. Open the detergent dispenser. Press the catch as indicated in the picture and pull the detergent dispenser out.

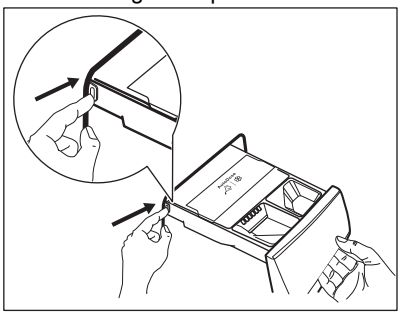

2. Remove the insert for the softener and, if inserted, the container for liquid detergent.

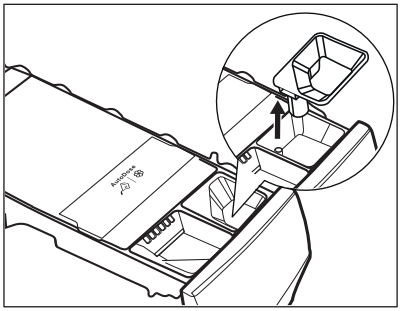

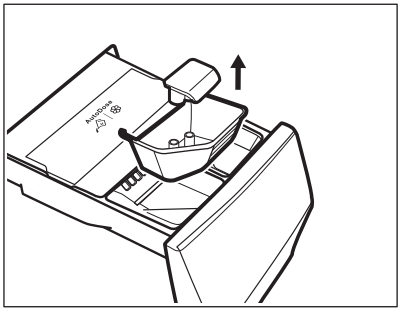

3. Press the catch on the back as indicated in the picture and lift up the top cover to remove it.

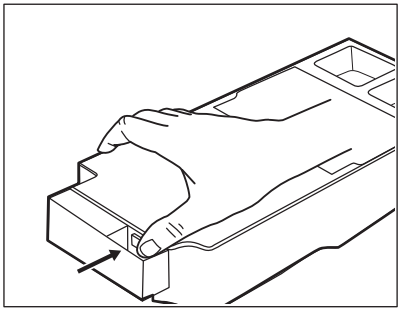

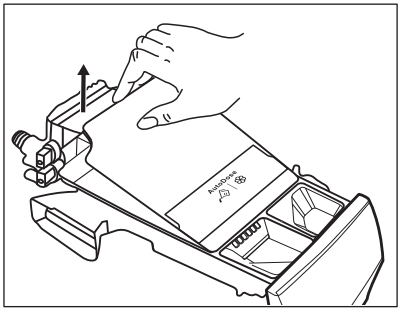

4. To remove any detergent residue or if you place a wrong additives in the tanks, empty the drawer in a basin or in suitable containers to collect the liquid.

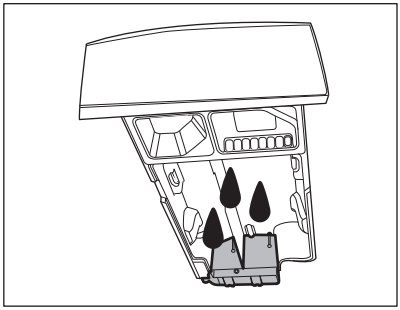

5. Wash the drawer and all inserts under running water or clean it with a damp cloth.

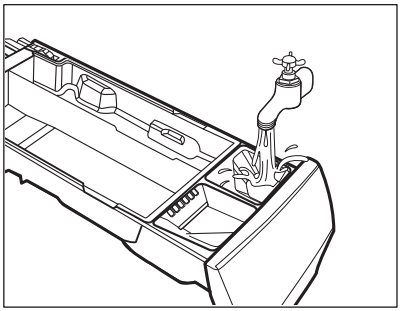

⚠ **CAUTION!**

Do not use sharp or metal brushes and sponges. Do not wash drawer in a dish washer.

6. Turn the dispenser up side down and open the bottom cover as indicated in the picture.

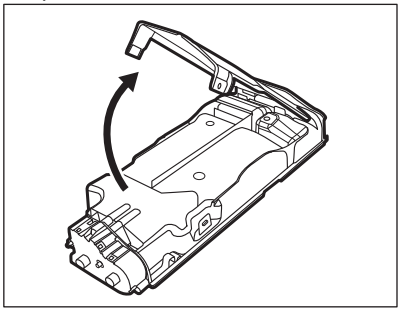

7. Make sure that all detergent residue is removed from the conveyor. Use only soft damp clothes.
8. Put bottom cover back to its position by aligning its holes on drawer hooks as indicated in the picture. Close it till "click" sound.

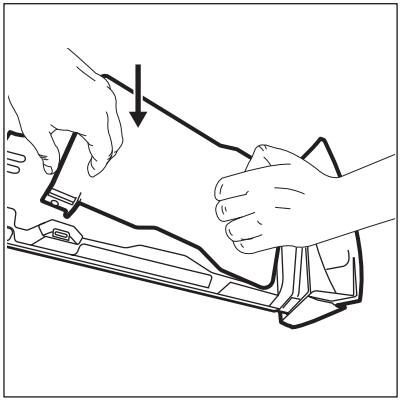

⚠ **CAUTION!**

Press the bottom cover as indicated in the picture. Make sure that it is closed properly.

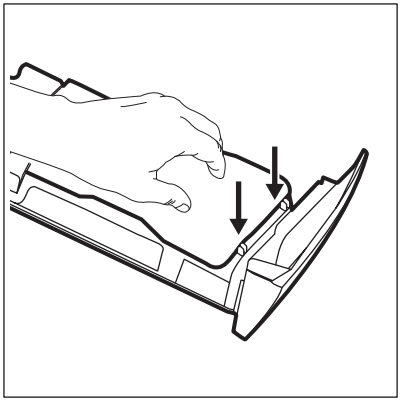

⚠ **WARNING!**

Do not clean with any sharp and metal brushes or any tools, pumps or sensors allocated on the back of the detergent drawer. If necessary, use only soft damp clothes.

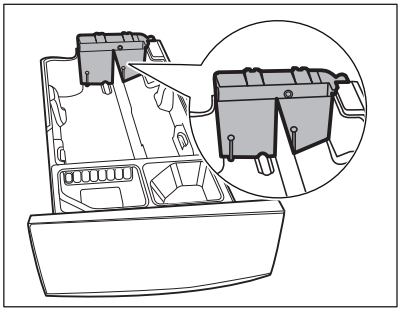

⚠ WARNING!

If some residues remain on the back area of tanks, soak detergent drawer in a warm water. Do not use tools to clean it. Before soaking, remove the handle by pressing red button and slide the handle as indicated in the picture.

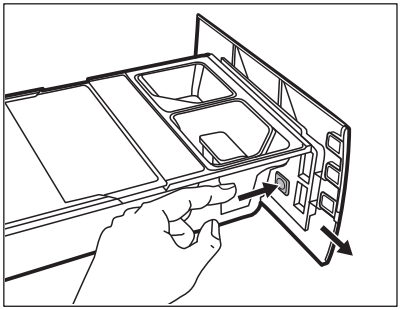

9. Make sure that all detergent residue is removed from the upper and lower part of the recess. Use a small brush to clean the recess.

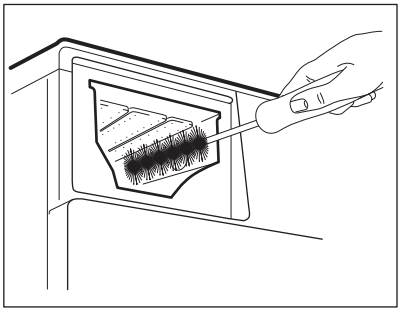

10. Reassembly the drawer as follows:
   a. Place the handle if was disassembled.
   b. Place the bottom cover and press till "click" sound.
   c. Place the top cover on the tanks compartment and press till "click" sound.
   d. Replace components on manual compartment.

11. Insert the detergent dispenser into the guide rails and gently close it till "click" sound. Run the rinsing programme without any clothes in the drum.

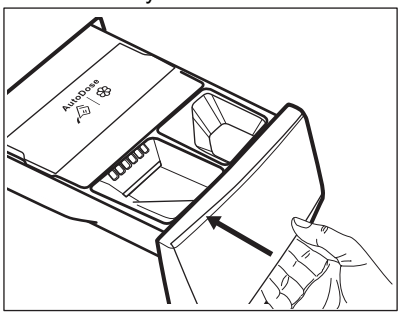

To restore the functionality, refill tanks with detergent and softener.

15.9 Cleaning the drain pump

Regularly check the drain pump filter and make sure that it is clean.

Clean the drain pump if:

- The appliance does not drain the water.
- The drum does not turn.
- The appliance makes an unusual noise because of the blockage of the drain pump.
- The display shows the alarm code E21

⚠ WARNING!

- Disconnect the mains plug from the mains socket.
- Do not remove the filter while the appliance operates.
- Do not clean the pump if the water in the appliance is hot. Wait until the water cools down .
- Repeat Step 3 several times by closing and opening the valve until the water stops flowing out.

Always keep a rag nearby to dry up any water spillages when removing the filter.

Proceed as follows to clean the pump:

1.

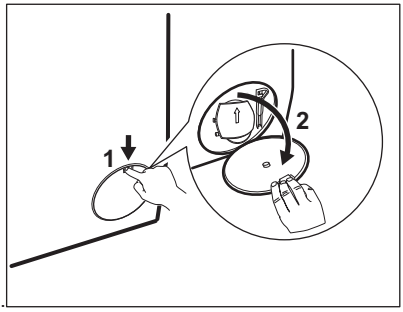

2.

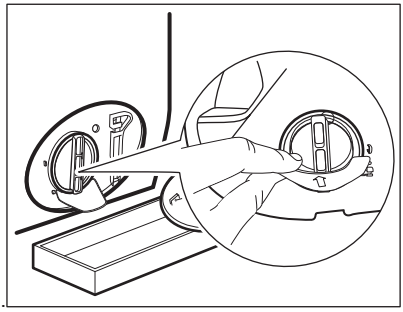

3.

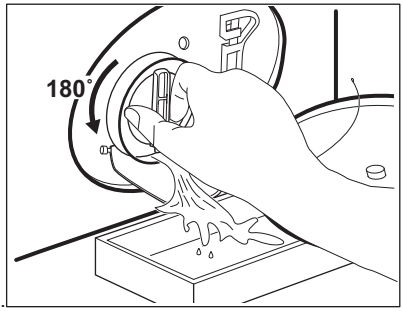

4.

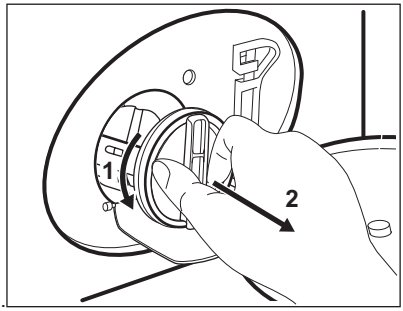

5.

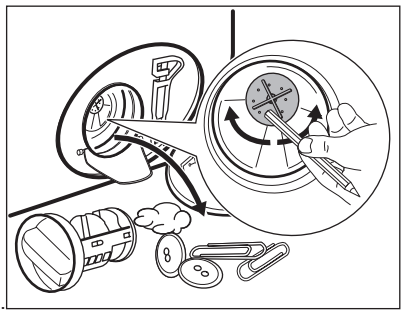

6.

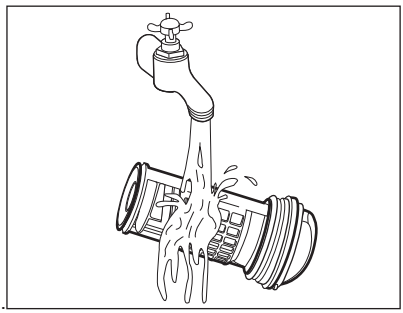

7. 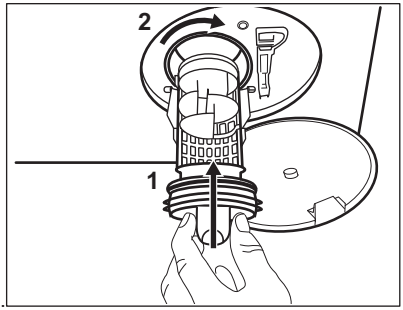

8. 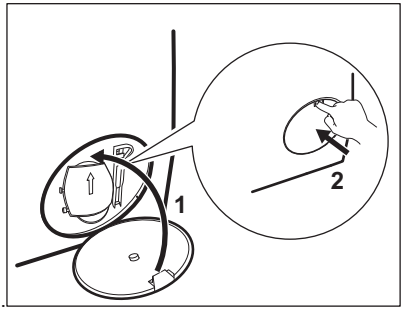

⚠ WARNING!

Make sure that the impeller of the pump can rotate. If it does not rotate, contact the Authorised Service Centre. Make sure also that you tighten the filter correctly to prevent leakages.

When you drain the water with the emergency drain procedure, you must activate the drain system again:

1. Put 2 litres of water in the main wash compartment of the detergent dispenser.
2. Start the programme to drain the water.

15.10 Cleaning the inlet hose and the valve filter

ⓘ

It is recommended to clean both filters of the inlet hose and valve occasionally to remove any deposit collected over time.

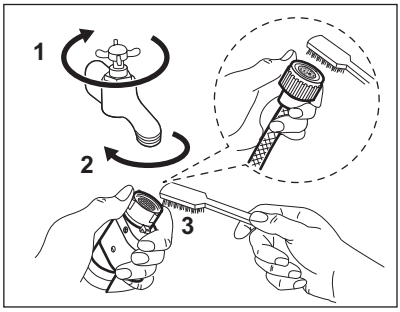

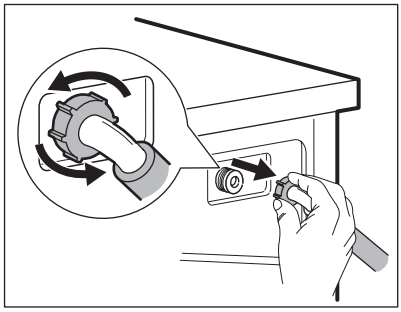

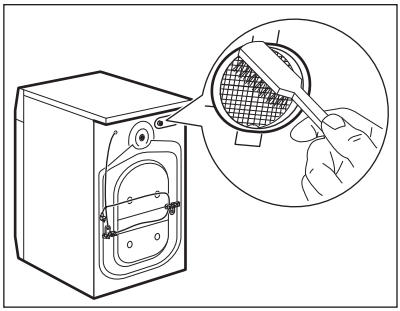

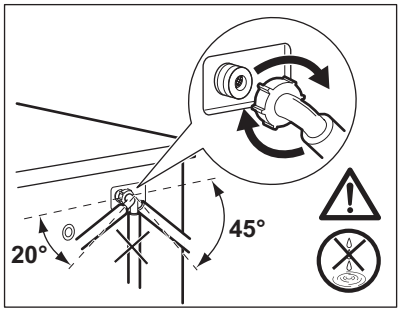

15.11 Emergency drain

If the appliance cannot drain the water, carry out the same procedure, described in "Cleaning the drain pump" paragraph. If necessary, clean the pump.

When you drain the water with the emergency drain procedure, you must activate the drain system again:

1. Put 2 litres of water in the main wash compartment of the detergent dispenser.
2. Start the programme to drain the water.

15.12 Frost precautions

If the appliance is installed in an area where the temperature can reach values around 0° C or drop below, remove the remaining water from the inlet hose and the drain pump.

1. Disconnect the mains plug from the mains socket.
2. Close the water tap.
3. Put the two ends of the inlet hose in a container and let the water flow out of the hose.
4. Empty the drain pump. Refer to the emergency drain procedure.
5. When the drain pump is empty, install the inlet hose again.

⚠ WARNING!

Make sure that the temperature is higher than 0 °C before you use the appliance again.
The manufacturer is not responsible for damages caused by low temperatures.

16. TROUBLESHOOTING

⚠ WARNING!

Refer to Safety chapters.

16.1 Alarm Codes and Potential failures

The appliance does not start or it stops during operation. First try to find a solution to the problem (refer to the tables).

⚠ WARNING!

Deactivate the appliance before carrying out any check.

With some problems, the display shows an alarm code and the Avvio/Pausa ▷‖ **button may flash continuously:**

Alarm Codes	Possible solution

E11 The appliance does not fill with water properly.	• Make sure that the water tap is open. • Make sure that the pressure of the water supply is not too low. For this information, contact your local water authority. • Make sure that the water tap is not clogged. • Make sure that the inlet hose has no kinks, damages or bends. • Make sure that the connection of the water inlet hose is correct. • Make sure that the filter of the inlet hose and the filter of the valve are not clogged. Refer to "Care and cleaning".
E21 The appliance does not drain the water.	• Make sure that the sink spigot is not clogged. • Make sure that the drain hose has no kinks or bends. • Make sure that the drain filter is not clogged. Clean the filter, if necessary. Refer to "Care and cleaning". • Make sure that the connection of the drain hose is correct. • Set the drain programme if you set a programme without drain phase. If the drain programme is not available in the programme dial, it can be set via App. • Set the drain programme if you set an option which ends with water in the tub.
E41 The appliance door is open or not closed correctly.	• Make sure that the door is properly closed.
E91 Internal fail. No communication between electronic elements of the appliance.	• The programme was not finished properly or the appliance stopped too early. Switch the appliance off and on again. • If the alarm code appears again, contact the Authorised Service Centre.
EA0 The appliance drum doors are open or not closed correctly.	• Make sure that drum doors are properly closed.
EH1: Frequency of power supply is out of range. EH2: Supply voltage is too high. EH3: Supply voltage is too low.	
EF3 The anti-flood device is on.	• Disconnect the appliance and close the water tap. Contact the Authorised Service Centre.

If the display shows other alarm codes, deactivate and activate the appliance. If the problem continues, contact the Authorised Service Centre.

Some errors may not occur. Subject to change without notice.

In case of different problem with the appliance check the table below for possible solutions.

Potential failures	Possible solution
The programme does not start.	• Make sure that the mains plug is connected to the mains socket. • Make sure that the appliance door is closed. • Make sure that there is no damaged fuse in the fuse box. • Make sure that the Avvio/Pausa ▷II has been touched. • If the delay start is set, cancel the setting or wait for the end of countdown. • Make sure that the detergent dispenser is firmly closed. • Deactivate the Child Lock function if it is on. • Check the position of the knob on the selected programme.
The appliance fills with water and drains immediately.	• Make sure that the drain hose is in the correct position. The hose may be positioned too low. Refer to "Installation instruction".
The spin phase does not operate or the washing cycle lasts longer than usual.	• Set the spin programme. If the drain programme is not available in the programme dial, it can be set via App'. • Make sure that the drain filter is not clogged. Clean the filter, if necessary. Refer to "Care and cleaning". • Adjust manually the items in the tub and start the spin phase again. This problem may be caused by balance problems.
There is water on the floor.	• Make sure that the couplings of the water hoses are tight and there is not water leakages. • Make sure that the water inlet hose and the drain hose have no damages. • Make sure you use the correct detergent and the correct quantity of it.
You cannot open the appliance door.	• Make sure that a washing programme that ends with water in tub, has not been selected. • Make sure that the washing programme is finished. • Set the drain or the spin programme if there is water in the drum. If the spin and drain programmes are not available in the programme dial, they can be set via App. • Make sure that the appliance receives electrical power. • This problem may be caused by a failure of the appliance. Contact the Authorised Service Centre. • Make sure that the x is not activated. Deactivate it.
The display does not show the wireless indicator ⌔.	• Check the wireless signal. • Make sure that the wireless connection is on. Refer to paragraph "Configuring the washing machine wireless connection" in "Wi-Fi - Connectivity setup" chapter. • Check your home network and router. • Restart the router. • Contact your wireless service provider if there are further problems with the wireless network.

Potential failures	Possible solution
The App cannot connect to the appliance.	• Check the wireless signal. • Check if your smart device is connected to the wireless network. • Check your home network and router. • Restart the router. • Contact your wireless service provider if there are problems with the wireless network. • The appliance, the smart device, or both, need to be configured again because a new router has been installed or the router configuration has been changed.
The App cannot frequently connect to the appliance.	• Make sure that the wireless signal reaches the appliance. Try to move the home router as near the appliance as possible or consider purchasing a wireless range extender. • Make sure the wireless signal is not disrupted by microwave. Turn the microwave off. Avoid using the microwave and the remote control at the same time.
The display shows UPd. All buttons are inactive, except the the On/Off .	• The appliance is downloading any available updates. Wait until the update process is complete. If you deactivate the appliance during update, it resumes when you activate the appliance again.
The appliance makes an unusual noise and vibrates.	• Make sure the levelling of the appliance is correct. Refer to "Installation instruction". • Make sure that the packaging and/or the transit bolts are removed. Refer to "Installation instruction". • Add more laundry in the drum. The load may be too small.
The programme duration increases or decreases during programme execution.	• The SensiCare System is able to adjust the programme duration according to the type and the laundry load size. Refer to "The SensiCare System load detection" in "Daily Use" chapter.
The washing results are not satisfactory.	• Increase the detergent quantity or use a different detergent. • Use special products to remove the stubborn stains before you wash the laundry. • Make sure that you set the correct temperature. • Decrease the laundry load. • When using AutoDose tanks, make sure that they are not empty. • When using AutoDose tanks, verify the pre-set detergent/fabric softener dosage. Refer to "Basic setting" paragraph in "The AutoDose Technology" chapter. • Make sure that you have cleaned the AutoDose tanks before using different brand and type of detergent, fabric softener or other additives.
Too much foam in the drum during the washing cycle.	• Reduce the quantity of detergent or the number of tablets or single-dose detergents. • When using AutoDose tanks, verify the pre-set detergent/fabric softener dosage. Refer to "Basic setting" paragraph in "The AutoDose Technology" chapter.
The detergent/fabric softener level does not decrease in the AutoDose tanks after washing.	• This is normal: tanks are quite large and detergent consumption may be not so evident.

After the check, activate the appliance. The programme continues from the point of interruption. If the problem occurs again, contact the Authorised Service Centre.

The necessary data for the service centre are on the rating plate.

17. CONSUMPTION VALUES

17.1 Comment

ⓘ

The QR code on the energy label supplied with the appliance provides a web link to the information related to the performance of the appliance in the EU EPREL database. Keep the energy label for reference together with the user manual and all other documents provided with this appliance.
It is also possible to find the same information in EPREL using the link **https://eprel.ec.europa.eu** and the model name and product number that you find on the rating plate of the appliance. Refer to 'Product description' chapter for the position of the rating plate.

ⓘ

Values and programme duration may differ depending on different conditions (e.g. room temperature, water temperature and pressure, load size and type of laundry, supply voltage) and also if you change the default setting of a programme.

17.2 According to Commission Regulation Eu 2019/2023

Eco 40-60 programme	kg	kWh	Litres	hh:mm	%	°C	rpm[1)]
Full load	10	0.860	69.0	3:50	53.00	34	1351
Half load	5	0.465	55.0	2:55	53.00	27	1351
Quarter load	2,5	0.305	40.0	2:35	54.00	25	1351

1) Maximum spin speed.

Power consumption in different modes

Off (W)	Stand-by (W)	Delay start (W)	Networked standby (W)
0.50	0.50	4.00	2.00[1)]

Time to Off/Standby mode is 15 minutes maximum.

1) The energy consumption of the connected function is approximately 17.5 kWh per year. To disconnect this function, please refer to the chapter 'Wi-fi - Connectivity setup'.

17.3 Common programmes

Programme	kg	kWh	Litres	hh:mm	%	°C	rpm
Cotoni 1) 90°C	10	2.90	85.0	4:05	52.00	85	1400
Cotoni 60°C	10	1.80	80.0	3:40	52.00	55	1400
Cotoni 2) 20°C	10	0.40	80.0	3:15	52.00	20	1400
Sintetici 40°C	4	0.85	75.0	2:30	35.00	40	1200
Delicati 3) 30°C	2	0.35	60.0	1:25	35.00	30	1200
Lana 30°C	1,5	0.30	70.0	1:05	30.00	30	1200

1) Suitable for washing heavily soiled textiles.

2) Suitable for washing lightly soiled cottons, synthetic and mixed fabrics.

3) It also performs as quick washing cycle for lightly soiled laundry.

18. QUICK GUIDE

18.1 Daily use

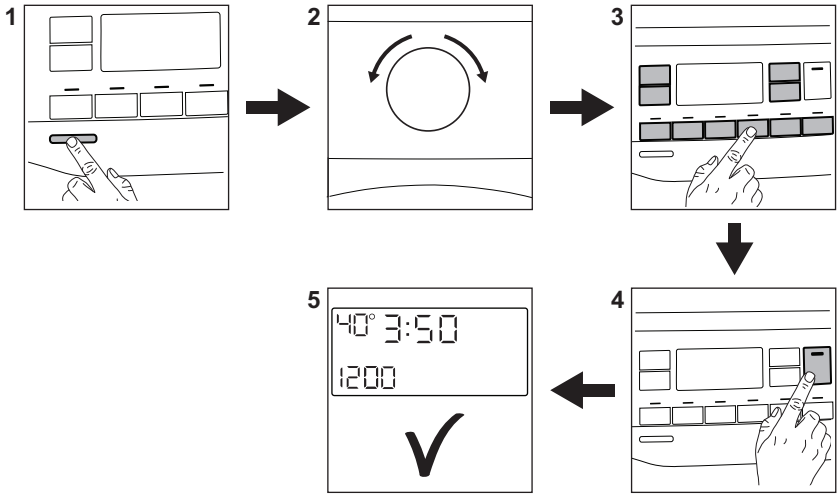

Connect the mains plug to the mains socket.

Open the water tap.

Load the laundry.

When using AutoDose tanks, the detergent and fabric softener are uploaded automatically. Make sure that tanks are not empty.

When using manual compartments, pour the detergent and other treatments in the proper compartment.

When using a liquid detergent in manual compartment, insert the container for liquid detergent.

1. Push the **On/Off** button to switch the appliance on.
2. Turn the programme dial to set the desired programme.
3. Set the desired options by means of the corresponding touch buttons.
4. To start the programme, touch the **Avvio/ Pausa** ▷‖ button.
5. The appliance starts.

At the end of the programme, remove the laundry.

Push the **On/Off** button to switch the appliance off.

18.2 Cleaning the drain pump filter

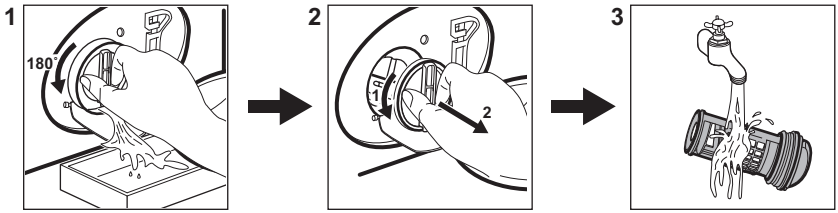

Clean the filter regularly, especially if the alarm code E21 appears on the display.

18.3 Programmes

Programme	Load	Product description
Cotoni	10 kg	White and coloured cotton fabrics. Ideal for normal and heavy soil.
Sintetici	4 kg	Synthetic items or mixed fabric items.
Delicati	2 kg	Delicate fabrics such as acrylics, viscose, polyester items.
Lana	1,5 kg	Machine washable wool, hand washable wool and delicates.
Rapido 20'	3 kg	Cotton and synthetic items lightly soiled or worn only once.
Risciacquo	10 kg	All fabrics, except woollens and very delicate fabrics. Programme for rinsing and spinning.
Centrifuga/Scarico	10 kg	All fabrics, except woollens and very delicate fabrics. Programme for spinning and draining the water.
Jeans	4 kg	Denim clothing and jersey items.
Sport	4 kg	Sportswear.

Programme	Load	Product description
Seta	0,5 kg	Special programme for silk and mixed synthetic items.
Piumoni	3 kg	Single synthetic blanket, bedspread, duvet.
Outdoor	2,5 kg**1)** 1 kg**2)**	Modern outdoor sporting garments.
Hygiène	10 kg	White cotton items. This programme removes more than 99,99% of bacteria and viruses**3)**
Eco 40-60	10 kg	White and coloured cottons. Normally soiled garments.

1) Washing programme.

2) Washing programme and waterproofing phase.

3) Tested for Staphylococcus aureus, Enterococcus faecium, Candida albicans, Pseudomonas aeruginosa and MS2 Bacteriophage in external test performed by Swissatest Testmaterialien AG in 2021 (Test Report No. 202120117).

19. ENVIRONMENTAL CONCERNS

Recycle materials with the symbol . Put the packaging in relevant containers to recycle it. Help protect the environment and human health by recycling waste of electrical and electronic appliances. Do not dispose of appliances marked with the symbol with the household waste. Return the product to your local recycling facility or contact your municipal office.

electrolux.com

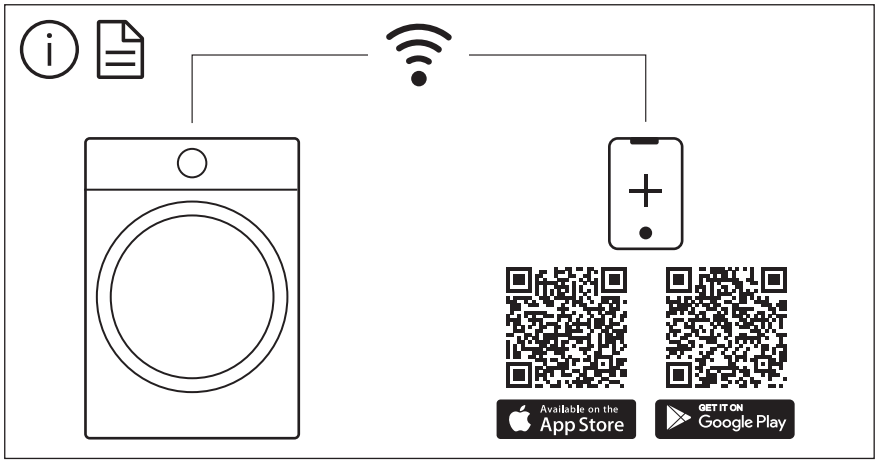

The software in this product contains components that are based on free and open source software. Electrolux gratefully acknowledges the contributions of the open software and robotics communities to the development project.

To access the source code of these free and open source software components whose license conditions require publishing, and to see their full copyright information and applicable license terms, please visit:
http://electrolux.opensoftwarerepository.com (folder NIUS)

135955030-A-192024