Electrolux

electrolux.com/register

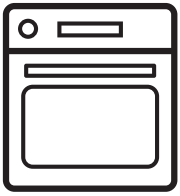

EN User Manual | **Oven**

KOHHH04K
KOHHH04W
KOHHH04X

INSTALLATION

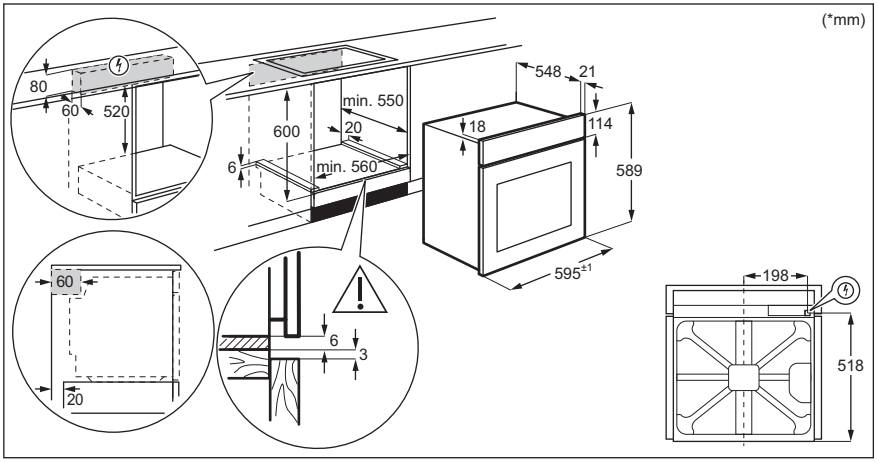

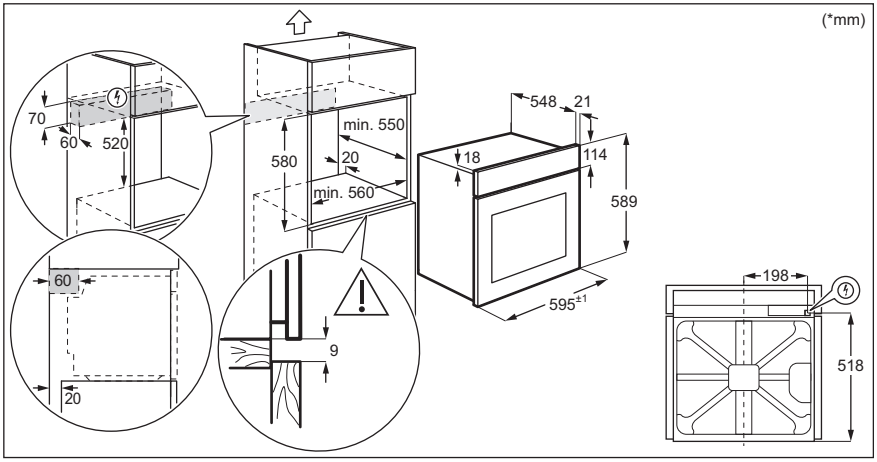

Welcome to Electrolux! Thank you for choosing our appliance.



In our drive to be sustainable, we are reducing paper assets and provide full user manuals online. Access your full user manual at **electrolux.com/manuals**



Get usage advice, brochures, trouble shooter, service and repair information at **electrolux.com/support**

1. ⚠ SAFETY INFORMATION

Before the installation and use of the appliance, carefully read the supplied instructions. The manufacturer is not responsible for any injuries or damage that are the result of incorrect installation or usage. Always keep the instructions in a safe and accessible location for future reference.

- This appliance can be used by children aged from 8 years and above and persons with reduced physical, sensory or mental capabilities or lack of experience and knowledge if they have been given supervision or instruction concerning the use of the product in a safe way and understand the hazards involved. Children of less than 8 years of age and persons with very extensive and complex disabilities shall be kept away from the appliance unless continuously supervised.
- Children should be supervised to ensure that they do not play with the appliance.
- Keep all packaging away from children and dispose of it appropriately.
- WARNING: Keep children and pets away from the appliance when it operates or when it cools down. Accessible parts become hot.
- Children shall not carry out cleaning and user maintenance of the appliance without supervision.
- If the appliance has a child safety device, it should be activated.
- This appliance is for cooking purposes only.
- This appliance is designed for single household domestic use in an indoor environment.

- This appliance may be used in offices, hotel guest rooms, bed & breakfast guest rooms, farm guest houses and other similar accommodation where such use does not exceed (average) domestic usage levels.
- WARNING: The appliance and its accessible parts become hot during use. Care should be taken to avoid touching heating elements or the surface of the oven cavity.
- Always use oven gloves to remove or put in accessories or ovenware.
- If the mains power supply cable is damaged, it must be replaced by the manufacturer, its Authorised Service Centre or similarly qualified persons to avoid an electrical hazard.
- To remove the shelf supports first pull the front of the shelf support and then the rear end away from the side walls. Install the shelf supports in the opposite sequence (if applicable).
- Do not use a steam cleaner to clean the appliance.
- Do not use harsh abrasive cleaners or sharp metal scrapers to clean the glass door since they can scratch the surface, which may result in shattering of the glass.
- WARNING: Ensure that the appliance is switched off before replacing the lamp to avoid the possibility of electric shock.
- Use only the food sensor (core temperature sensor) recommended for this appliance (if applicable).

2. SAFETY INSTRUCTIONS

2.1 Installation and Electrical connection

> ⚠ **WARNING!**
>
> Only a qualified person must install and connect this appliance.

Follow the installation instructions supplied with the appliance.

Install the appliance in a safe and suitable place that meets installation requirements.

Do not use the appliance before installing it in the built-in structure.

Keep the minimum distance from other appliances and units. Before mounting the appliance, check if the oven door opens without restraint.

Do not install or use a damaged appliance.

Remove all the packaging.

Always take care when moving the appliance as it is heavy. Do not pull the appliance by the handle. Always use safety gloves and enclosed footwear.

The appliance is equipped with an electric cooling system. It must be operated with the electric power supply.

⚠ WARNING!

Risk of fire and electric shock.

Make sure that the parameters on the rating plate are compatible with the electrical ratings of the mains power supply.

The appliance must be earthed. Always use a correctly installed shockproof socket.

Do not use multi-plug adapters and extension cables.

Make sure not to cause damage to the mains plug and to the mains cable. Contact the Authorised Service Centre or an electrician to change a damaged mains cable.

Do not let mains cables touch or come near the appliance door or the niche below the appliance, especially when it operates or the door is hot.

Do not pull the mains cable to disconnect the appliance. Always pull the mains plug.

Connect the mains plug to the mains socket only at the end of the installation. Make sure that there is access to the mains plug after the installation.

If the mains socket is loose, do not connect the mains plug.

Fully close the appliance door before you connect the mains plug to the mains socket.

Use only correct isolation devices: line protecting cut-outs, fuses (screw type fuses removed from the holder), earth leakage trips and contactors.

The electrical installation must have an isolation device which lets you disconnect the appliance from the mains at all poles. The isolation device must have a contact opening width of minimum 3 mm.

For the section of the cable refer to the total power on the rating plate. You can also refer to the table:

Cable types applicable for installation or replacement for Europe:
H07 RN-F, H05 RN-F, H05 RRF, H05 VV-F, H05 V2V2-F (T90), H05 BB-F

Total power (W)	Section of the cable (mm²)
maximum 1380	3 x 0.75
maximum 2300	3 x 1
maximum 3680	3 x 1.5

2.2 Use and Maintenance

⚠ WARNING!

Risk of injury, burns, electric shock, fire, explosion or damage to the appliance.

Do not change the specification of this appliance.

Do not let the appliance stay unattended during operation. Deactivate the appliance after each use.

Make sure that the ventilation openings are not blocked.

If the appliance is installed behind a furniture panel (e.g. a door) make sure the door is never closed when the appliance operates. Heat and moisture can build up behind a closed furniture panel and cause subsequent damage to the appliance, the furniture or the floor. Do not close the furniture panel until the appliance has cooled down after use.

Be careful when you open the appliance door while the appliance is in operation. Hot air can release.

Do not operate the appliance with wet hands or when it has contact with water.

Do not apply pressure on the open door. Be careful when you remove the door from the appliance. The door is heavy.

Do not use the appliance as a work surface or as a storage surface.

Do not put flammable products or items that are wet with flammable products in, near or on the appliance.

When you place food into hot oil, it may splash.

Always cook with the oven door closed. Open the appliance door carefully. The use of ingredients with alcohol can cause a mixture of alcohol and air.

Always use glass and jars approved for preserving purposes.

Do not let sparks or open flames to come in contact with the appliance when you open the door.

Do not share your Wi-Fi password (if applicable).

To prevent damage or discoloration to the enamel:
- do not put ovenware or other objects in the appliance directly on the bottom.
- do not put aluminium foil directly on the bottom of cavity of the appliance.
- do not put water directly into the hot appliance.
- do not keep moist dishes and food in the appliance after you finish the cooking.
- be careful when you remove or install the accessories.

Use a deep pan for moist cakes. Fruit juices cause stains that can be permanent.

Discoloration of the enamel or stainless steel has no effect on the performance of the appliance.

Clean regularly the appliance to prevent the deterioration of the surface material.

Before maintenance, deactivate the appliance and disconnect from the mains. Do not clean the catalytic enamel (if applicable) with detergents.

Make sure the appliance is cold. There is the risk that the glass panels can break. Replace immediately the door glass panels when they are damaged. Contact the Authorised Service Centre.

Clean the appliance with a moist soft cloth. Use only neutral detergents. Do not use abrasive products, abrasive cleaning pads, solvents or metal objects.

Do not clean the catalytic enamel with detergents (if applicable).

If you use an oven spray, follow the safety instructions on its packaging.

Concerning the lamp(s) inside this product and spare part lamps sold separately: These lamps are intended to withstand extreme physical conditions in household appliances, such as temperature, vibration, humidity, or are intended to signal information about the operational status of the appliance. They are not intended to be used in other applications and are not suitable for household room illumination.

Use only lamps with the same specifications.

This product contains a light source of energy efficiency class G.

To repair the appliance contact the Authorised Service Centre. Use original spare parts only.

2.3 Disposal

⚠ WARNING!

Risk of injury or suffocation.

Disconnect the appliance from the mains supply.

Cut off the mains electrical cable close to the appliance and dispose of it.

3. PRODUCT DESCRIPTION

3.1 General overview

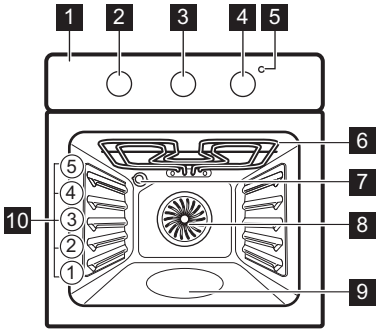

1 Control panel

2 Knob for the heating functions
3 Knob for the timer
4 Control knob (for the temperature)
5 Temperature indicator / symbol
6 Heating element
7 Lamp
8 Fan
9 Cavity embossment - Aqua cleaning container
10 Shelf positions

4. BEFORE FIRST USE

4.1 Initial preheating and cleaning

Preheat the empty appliance before the first use and contact with food. The appliance can emit unpleasant smell and smoke. Ventilate the room during preheating.

1. Remove all accessories from the appliance.
2. Set the function . Set the maximum temperature. Let the appliance operate for 1 h.
3. Set the function . Set the maximum temperature. Let the appliance operate for 15 min.
4. Set the function . Set the maximum temperature. Let the appliance operate for 15 min.
5. Turn off the appliance and wait until it is cold.
6. Clean the appliance and the accessories only with a microfibre cloth, warm water and a mild detergent.
7. Put the accessories back to their initial position.

5. DAILY USE

5.1 Heating functions

	Light: Oven lamp
	Fan Cooking: Tenderness, crispiness
	Moist Fan Baking: Baking
	Conventional Cooking / **Aqua Clean**: Traditional baking, crispiness, crust gloss / Cleaning
	Bottom Heat: Preserving food
	Turbo Grilling: Roasting meat, making gratin, browning

	Pizza Function : Baking pizza
	Defrost: Defrosting

5.2 Notes on: Moist Fan Baking

This function was used to comply with the energy efficiency class and ecodesign requirements (according to EU 65/2014 and EU 66/2014). Tests according to: IEC/EN 60350-1.

The oven door should be closed during cooking so that the function is not interrupted and the oven operates with the highest energy efficiency possible.

When you use this function the lamp automatically turns off.

For general energy saving recommendations refer to "Energy Efficiency" chapter, Energy saving tips.

This function is designed to save energy during cooking. When you use this function, the temperature in the cavity may differ from the set temperature. The heating power may be reduced.

5.3 Setting a heating function

1. Turn the knob for the timer to the initial position ✋. In this position you operate the appliance manually.
2. Turn the knob for the heating functions to select a heating function.
3. Turn the control knob to select the temperature.
4. When the cooking ends, turn the knobs to the off position to turn off the appliance.

6. CLOCK FUNCTIONS

6.1 End of cooking

To set the switch-off time for heating functions.

1. Set the heating function and the temperature.
2. Turn the knob for the timer to its full range.
3. Turn the knob for the timer to set the switch-off time.

When the set time ends, the signal sounds and the appliance turns off.

4. Turn the knob for the heating functions and the knob for the temperature to the off position.

ⓘ

To set a heating function without a set cooking time, turn the knob for the timer to the initial position ✋.

7. CARE AND CLEANING

7.1 Notes on cleaning

Cleaning Agents

- Clean the front of the appliance only with a microfibre cloth with warm water and a mild detergent. Clean and check the door gasket around the frame of the cavity.
- Use a cleaning solution to clean metal surfaces.
- Clean stains with a mild detergent.

Everyday Use

- Clean the interior of the appliance after each use. Fat accumulation or other residue may cause fire.
- Moisture can condense in the appliance or on the door glass panels. To decrease the condensation, let the appliance work for 10 minutes before cooking. Do not store food in the appliance for longer than 20 minutes. Dry the interior of the appliance only with a microfibre cloth after each use.

Accessories

- Clean all accessories after each use and let them dry. Use only a microfibre cloth with warm water and a mild detergent. Do not clean the accessories in a dishwasher.
- Do not clean the non-stick accessories using abrasive cleaner or sharp-edged objects.

8. TROUBLESHOOTING

8.1 What to do if...

In any cases not included in this table please contact an Authorised Service Centre.

Problem	Cause and remedy
The appliance does not heat up.	The fuse is blown. Make sure that the fuse is the cause of the malfunction. If the problem persists, contact a qualified electrician.
The door gasket is damaged.	Do not use the appliance. Contact an Authorised Service Centre.
End of Cooking - is not set.	Set: End of Cooking.
The lamp does not work.	The lamp is burnt out. Replace the lamp.

8.2 Service data

If you cannot find a solution to the problem yourself, contact your dealer or an Authorised Service Centre.

The necessary data for the service centre is on the rating plate. The rating plate is located on the front frame of the appliance. It is visible when you open the door. Do not remove the rating plate from the appliance.

We recommend that you write the data here:

Model (MOD.) :
Product number (PNC):
Serial number (S.N.):

9. ENERGY EFFICIENCY

9.1 Product Information Sheet and Product Information according to EU Energy Labelling and Ecodesign Regulations

Supplier's name	Electrolux
Model identification	KOHHH04K 949496747 KOHHH04W 949496746 KOHHH04X 949496748
Energy Efficiency Index	81.0
Energy efficiency class	A+
Energy consumption with a standard load, conventional mode	0.89 kWh/cycle
Energy consumption with a standard load, fan-forced mode	0.68 kWh/cycle
Number of cavities	1
Heat source	Electricity
Volume	68 l
Type of oven	Built-In Oven

Mass	KOHHH04K	26.3 kg
	KOHHH04W	26.3 kg
	KOHHH04X	26.3 kg

IEC/EN 60350-1 - Household electric cooking appliances - Part 1: Ranges, ovens, steam ovens and grills - Methods for measuring performance.

9.2 Product Information for power consumption and maximum time to reach applicable low power mode

Power consumption in off mode	0.3 W
Maximum time needed for the equipment to automatically reach the applicable low power mode	20 min

9.3 Energy saving tips

Following tips below will help you save energy when using your appliance.

Make sure that the appliance door is closed when the appliance operates. Do not open the appliance door too often during cooking. Keep the door gasket clean and make sure it is well fixed in its position.

Use metal cookware and dark, non-reflective tins and containers to improve energy saving.

Do not preheat the appliance before cooking unless specifically recommended.

Keep breaks between baking as short as possible when you prepare a few dishes at one time.

Cooking with fan
When possible, use the cooking functions with fan to save energy.

Residual heat
When the cooking duration is longer than 30 min, reduce the appliance temperature to minimum 3 - 10 min before the end of cooking. The residual heat inside the appliance will continue to cook.

Use the residual heat to keep the food warm or warm up other dishes.

Keep food warm
Choose the lowest possible temperature setting to use residual heat and keep the food warm.

Moist Fan Baking
Function designed to save energy during cooking.

When you use this function the lamp is off.

10. ENVIRONMENTAL CONCERNS

Recycle materials with the symbol . Put the packaging in relevant containers to recycle it. Help protect the environment and human health by recycling waste of electrical and electronic appliances. Do not dispose of appliances marked with the symbol  with the household waste. Return the product to your local recycling facility or contact your municipal office.

electrolux.com

867377994-B-072024

