LANVIEW
PROFESSIONAL NETWORK SOLUTIONS

10.3Gb/s SFP+ BIDI Transceiver



10.3Gb/s SFP+ BIDI Transceiver

APSPBxxB33xDL10

Small Form Factor Pluggable (SFP+) transceivers are compatible with SFF-8431, SFF-8432 and support 10G Ethernet LR and 10G Fibre Channel. It is designed for use in 10G-Gigabit multi-rate links up to 10km of G.652. Digital diagnostics functions are available via a 2-wire serial interface, as specified in SFF-8472.

Product Features

- ✓ Single LC connector
- ✓ Hot-pluggable SFP footprint
- ✓ Uncooled DFB laser
- ✓ RoHS compliant and Lead Free
- ✓ Distance up to 10km on 9/125um SMF
- ✓ Metal enclosure for lower EMI
- ✓ Power dissipation <1.0W (0~70℃)
  <1.2W(-40~85℃)
- ✓ Commercial and industrial operating temperature optional
- ✓ SFP MSA SFF-8472 SFF-8431 SFF-8432 Compliant

Applications

- ✓ 10GBASE-LR/LW
- ✓ 10G Fibre Channel



Regulatory Compliance

- ESD to the Electrical PINs: compatible with MIL-STD-883 Method 3015
- ESD to the Single LC Receptacle: compatible with EN 61000-4-2
- Immunity compatible with EN 61000-4-3
- EMI compatible with FCC Part 15 Class B
- Laser Eye Safety compatible with FDA 21CFR 1040.10 and 1040.11 IEC 60950, IEC 60825-1,2
- RoHS compliant with RoHS 2.0 (2015/863/EU)-amending

Pin Descriptions

Pin	Symbol	Name	Ref.
1	VeeT	Transmitter Ground (Common with Receiver Ground)	1
2	TX Fault	Transmitter Fault. LVTTL-O	2
3	TX Disable	Transmitter Disable. Laser output disabled on high or open. LVTTL-I	3
4	SDA	2-Wire Serial Interface Data Line (Same as MOD-DEF2 in INF-8074i). LVTTL-I/O	2
5	SCL	2-Wire Serial Interface Data Line (Same as MOD-DEF2 in INF-8074i). LVTTL-I	2
6	Mod_ ABS	Module Absent, Connect to VeeT or VeeR in Module.	2
7	RS0	Rate Select 0, optionally controls SFP+ module receiver LVTTL-I	4
8	LOS	Loss of Signal indication. Logic 0 indicates normal operation. LVTTL-O	5
9	RS1	Rate Select 1, optionally controls SFP+ module transmitter. LVTTL-I	4
10	VeeR	Receiver Ground (Common with Transmitter Ground)	1
11	VeeR	Receiver Ground (Common with Transmitter Ground)	1
12	RD-	Receiver Inverted DATA out. AC Coupled. CML-O	
13	RD+	Receiver Non-inverted DATA out. AC Coupled. CML-O	
14	VeeR	Receiver Ground (Common with Transmitter Ground)	1
15	VccR	Receiver Power Supply	6
16	VccT	Transmitter Power Supply	6
17	VeeT	Transmitter Ground (Common with Receiver Ground)	1
18	TD+	Transmitter Non-Inverted DATA in. AC Coupled. CML- I	
19	TD-	Transmitter Inverted DATA in. AC Coupled. CML- I	
20	VeeT	Transmitter Ground (Common with Receiver Ground)	1

Note

1. Circuit ground is internally isolated from chassis ground.
2. TX Fault is an open collector/drain output .Which should be pulled up with a 4.7K – 10K Ohms resistor on the host board if intended for use. Pull up voltage should be between 2.0V to Vcc+0.3V.A high output indicates a transmitter fault caused by either the tx bias current or the tx output power exceeding the preset alarm thresholds. A low output indicates normal operation .In the low state, the output is pulled to <0.8V.
3. Laser output disabled on TX Disable >2.0V or open, enabled on TX Disable<0.8V.
4. Internally pulled down per SFF-8431 Rev4.1.
5. LOS is open collector output. Should be pulled up with 4.7k – 10kohms on host board to a voltage between 2.0V and 3.6V. Logic 0 indicates normal operation; logic 1 indicates loss of signal.
6. Internally connected

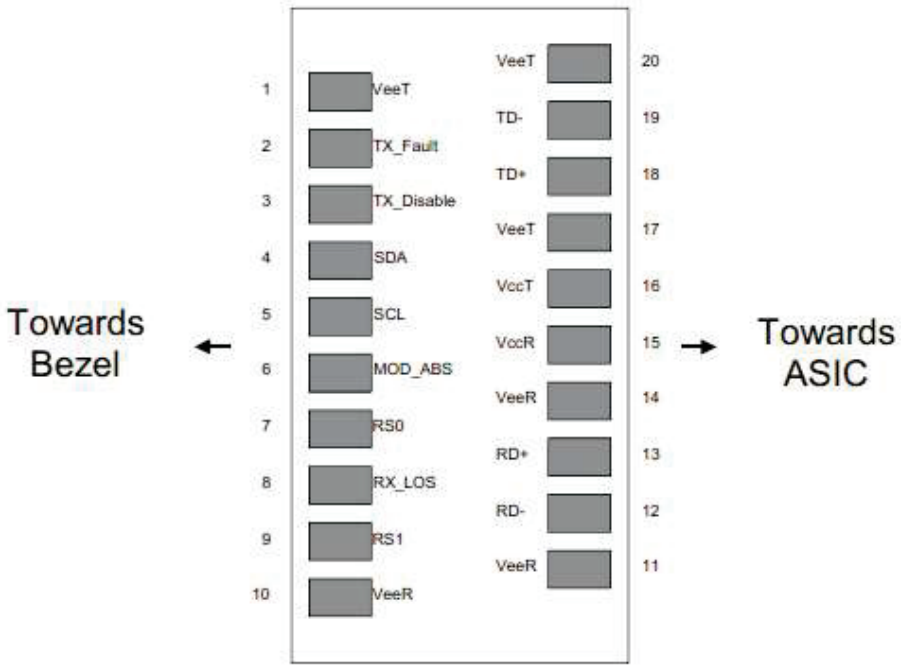

Pin-out of Connector Block on Host Board

Recommend Circuit Schematic

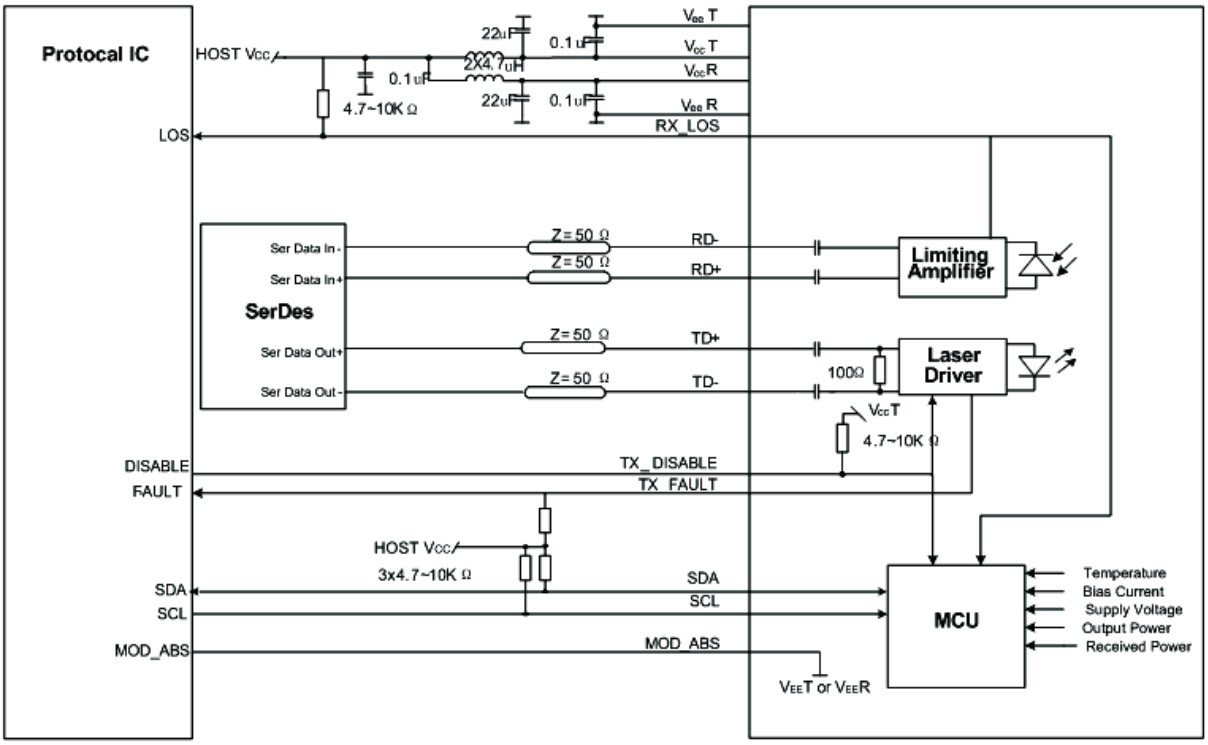

Absolute Maximum Ratings

Parameter	Symbol	Min	Typ	Max	Unit	Ref.
Maximum Supply Voltage	Vcc	-0.5		+4.0	V	
Storage Temperature	TS	-40		+85	℃	
Operating Humidity	RH	0		85	%	

Recommended Operating Conditions

Parameter	Symbol	Min	Typ	Max	Unit	Ref.
Power Supply Voltage	Vcc	3.13	3.30	3.47	V	
Power Supply Current	Icc			300	mA	Commercial
	Icc			350	mA	Industrial
Case Operating Temperature	Tc	0		+70	°C	Commercial
	TI	-40		+85	°C	Industrial
Data Rate	BR		10.3		Gbps	
9/125um G.652 SMF	Lmax			10	km	

Electrical Characteristics

Parameter	Symbol	Min	Typ	Max	Unit	Ref.
Transmitter						
Input differential impedance	Rin	80	100	120	Ω	1
Differential data input swing	Vin, pp	120		850	mV	
TX Disable-High		Vcc – 0.8		Vcc	V	
TX Disable-Low		Vee		Vee+ 0.8	V	
TX Fault-High		Vcc-0.8		Vcc	V	
TX Fault-Low		Vee		Vee+0.8	V	
Receiver						
Differential data output swing	Vout, pp	300		850	mV	2
Data output rise time	Tr	28			ps	3
Data output fall time	Tf	28			ps	3
LOS-High		Vcc – 0.8		Vcc	V	
LOS-Low		Vee		Vee+0.8	V	

Notes:

1. AC coupled.
2. Into 100 ohm differential termination.
3. 20 – 80 %

Optical Characteristics

Parameter	Symbol	Min	Typ	Max	Unit	Ref.
Transmitter						
Output Opt. Power	PO	-2		+3	dBm	
Optical Wavelength	λ	1260	1270	1280	nm	
		1320	1330	1340	nm	
Side-Mode Suppression Ratio	SMSR	30			dB	
Spectral Width(-20dB)	Δλ			1	nm	
Optical Extinction Ratio	ER	3.5			dB	
Receiver						
RX Sensitivity @10.3Gb/s	SENS1			-13	dBm	1,2
Receiver Overload		0.5			dBm	
Optical Center Wavelength	λC	1320	1330	1340	nm	
		1260	1270	1280	nm	
LOS De-Assert	LOSD			-15	dBm	
LOS Assert	LOSA	-30			dBm	
LOS Hysteresis		0.5		5	dB	

Notes:

1.Measured with conformance signals defined in FC-PI-2 Rev. 10.0 specifications.
2.Measured with PRBS 2^{31}-1 at 10^{-12} BER.

Mechanical Specifications

- Small Form Factor Pluggable (SFP+) transceivers are compatible with the dimensions defined by the SFP Multi-Sourcing Agreement (MSA), dimensions are in mm.

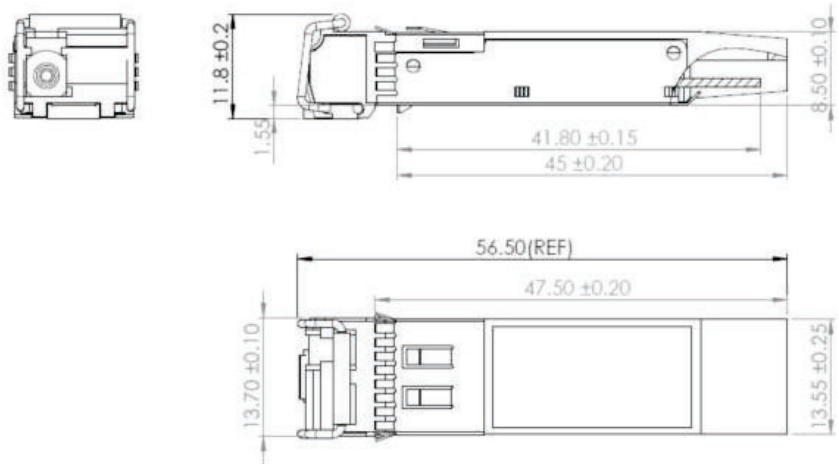

EEPROM Information

• EEPROM memory map specific data field description is as below:

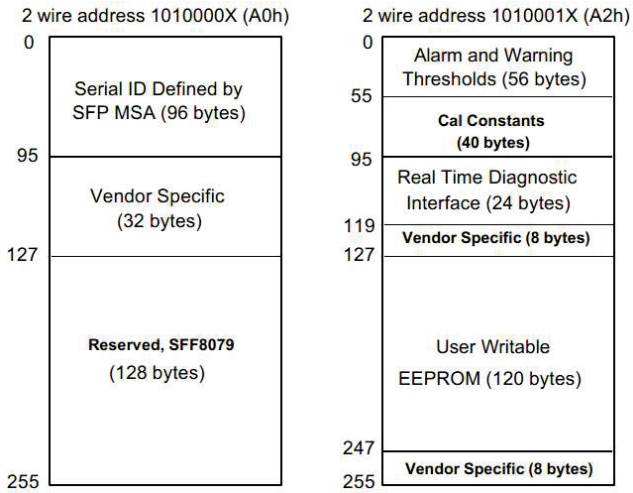

Digital Diagnostic Monitoring Interface

Five transceiver parameter values are monitored. The following table defines the monitored parameter's accuracy.

Parameter	Range	Accuracy	Calibration
Temperature	0 to +70°C (C) -40 to +85°C (I)	±3°C	Internal
Voltage	2.97 to 3.63V	±3%	Internal
Bias Current	0 to 100mA	±10%	Internal
TX Power	-2 to +3dBm	±3dB	Internal
RX Power	-13 to 0.5dBm	±3dB	Internal