

Installation Guide

Quality, Design and Innovation



home.liebherr.com/fridge-manuals

LIEBHERR

Contents

1 General safety instructions..... 2

2 Setup conditions..... 3
2.1 Space..... 3
2.2 Setting up multiple appliances..... 3
2.3 Electrical connection..... 4

3 Appliance dimensions..... 4

4 Recess dimensions..... 4
4.1 Internal dimensions..... 4

5 Ventilation requirements..... 5

6 Custom panel weights..... 5

7 Water connection*..... 5
7.1 Dimensions for the water connection..... 5
7.2 Water pressure..... 5

8 Transporting the appliance..... 5

9 Unpacking the appliance..... 5

10 Setting up the appliance..... 6
10.1 After setup..... 6

11 Disposal of packaging..... 6

12 Explanatory symbols used..... 6

13 ** freezer compartment door*..... 7**
13.1 Moving the door hinge..... 7

14 Reversing the door..... 7

15 Connecting the appliance to the water supply*.. 7
15.1 Connecting the hose..... 8
15.2 Check the water system..... 8

16 Installing the appliance in the recess..... 8
16.1 Preparing the recess and the appliance..... 10
16.2 Aligning the appliance in the recess..... 11
16.3 Temporarily fastening the knocking sensor..... 13
16.4 Inserting the covers and height adjuster..... 14
16.5 Mounting the front of the cabinet..... 14
16.6 Fastening the knocking sensor..... 16
16.7 Installing covers and welting..... 17
16.8 Setting the sensitivity of the knocking sensor..... 17
16.9 Checking the installation..... 18

17 Cabinet fronts..... 18
17.1 Dimensions..... 18
17.2 Mounting the cabinet front(s)..... 19
17.3 Setting the clearance to avoid collision..... 19

18 Water tank*..... 19
18.1 Inserting the water tank..... 19

19 Water filter*..... 20
19.1 Installing the water filter..... 20

20 Connecting the appliance..... 20

The manufacturer is constantly working to improve all types and models. Therefore, please be aware that we reserve the right to make changes to the shape, equipment and technology.

Symbol	Explanation
	**Read instructions** Please read the information in these instructions carefully to understand all of the benefits of your new appliance.

Symbol	Explanation
	**Additional information online** The digital manual with supplemental information and in additional languages can be found online by scanning the QR code on the front page of this manual or by entering the service number at **home.liebherr.com/fridge-manuals**. The service number can be found on the serial tag: 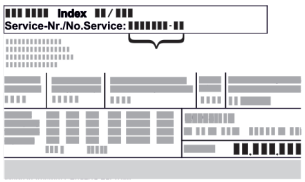 *Fig.* Example illustration
	**Check appliance** Check all parts for transport damage. If you have any complaints, please contact your agent or customer service.
	**Differences** These instructions apply to a range of models, so there may be differences. Sections that apply to certain models only are indicated by an asterisk (*).
	**Instructions and results** Instructions are marked with a ▶. Results are marked with a ▷.
	**Videos** Videos about the appliances are available on the YouTube channel of Liebherr-Hausgeräte.

1 General safety instructions

- Please keep this assembly manual in a safe place so you can refer back to it at any time.
- If you pass the appliance on, please hand this assembly manual to the new owner.
- Read this assembly manual before installation and use in order to use the appliance safely and correctly. Follow the instructions, safety instructions and warning messages included at all times. They are important for ensuring you can operate and install the appliance safely and without any problems.
- First read the general safety instructions in the “General safety instructions” section of the **operating instructions**, which accompany these installation instructions, and follow them. If you cannot find the **operating instructions**, you can download the **operating instructions** from the internet by entering the service number at **home.liebherr.com/fridge-manuals**. The

service number can be found on the serial tag:

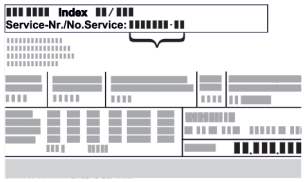

- **Observe the warning messages and other detailed information in the other sections when installing the appliance:**

⚠	DANGER	indicates a hazardous situation, which if not avoided, will result in death or serious injury.
⚠	WARNING	indicates a hazardous situation, which if not avoided, could result in death or serious injury.
⚠	CAUTION	indicates a hazardous situation, which if not avoided, will result in minor or moderate injury.
	NOTICE	indicates a hazardous situation, which if not avoided, could result in damage to property.
	Note	indicates useful advice and tips.

2 Setup conditions

⚠ **WARNING**
Risk of fire due to moisture!
If live parts or the power cord get wet, this can cause a short circuit.
▶ The appliance is designed for use in enclosed spaces. Do not operate the appliance in open space or in damp areas or where there is spray.

Normal use
- Only set up and use the appliance in enclosed spaces.
- Only use once installed.

2.1 Space

⚠ **WARNING**
Leaking refrigerant and oil!
Fire. The refrigerant contained within the appliance is environmentally friendly, but flammable. The oil contained within the appliance is flammable. Escaping refrigerant and oil can ignite if they are of high enough concentration and are exposed to an external heat source.
▶ Do not damage the pipelines of the coolant circuit and the compressor.

- If the appliance is installed in a very damp environment condensate water may form on the outside of the appliance.
  Always ensure sufficient airflow and ventilation in the setup location.
- The more refrigerant there is in the appliance, the larger the space that it is installed in must be. If the space is too small, any leak may create a flammable mixture of gas and air. For every 8 g of refrigerant, the installation space must be at least 1 m^3 . Specifications on the refrigerant in the appliance can be found on the serial tag plate inside the appliance.

2.1.1 Installation surface

- The floor of the installation site must be horizontal and level.
- If you are installing the unit in a cabinet standing on an uneven floor: level the cabinet.

2.1.2 Installation position

- Do no install the appliance in an area with direct sunlight, next to a heating unit or similar.
- You can install the appliance directly next to an oven.
- If you install the appliance directly next to an oven, its energy consumption may increase slightly. This depends on the service life and how often the oven is used.
- Only install the appliance in solid cabinets.

Note
A set for restricting the door opening angle to 90° can be acquired from Customer Services for appliances with soft closing.

2.2 Setting up multiple appliances

The appliances were developed for different installation options. If you want to install several appliances side by side or on top of each other, make sure that the following requirements are met:
❑ Only install those appliances side by side or on top of each other that were developed for the purpose.
❑ Observe the instructions and the following table.

NOTICE
Risk of damage caused by water condensate!
▶ Do no set up the appliance next to another refrigeration/freezer unit.

NOTICE
Risk of damage from condensation!
▶ Do no set up the appliance directly above another refrigeration/freezer unit.

Model	Installation type
All models	individually
Models with a model designation that starts with **S...**.	Side-by-Side (SBS)
Models up to a maximum recess height of 880 mm and with heated ceiling can be “set up” on top of each other. Top appliance up to a maximum recess height of 140 mm	On top of each other

Models and their installation type

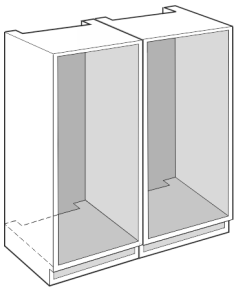

Fig. 1

Install each appliance in a separate cabinet recess.

2.3 Electrical connection

WARNING
Danger of fire due to incorrect positioning!
If the power supply cable or plug touches the back of the appliance, the vibration can damage the power supply cable or the plug resulting in a short circuit.

- ▶ Make sure the power supply cable is not trapped under the appliance when you position the appliance.
- ▶ Install the appliance so that it does not touch any plugs or power cables.
- ▶ Do not connect any appliances to sockets in the area of the back of the appliance.
- ▶ Do **not** place and operate power strips/power distributors and other electronic devices (such as halogen transformers) at the back of the appliances.

3 Appliance dimensions

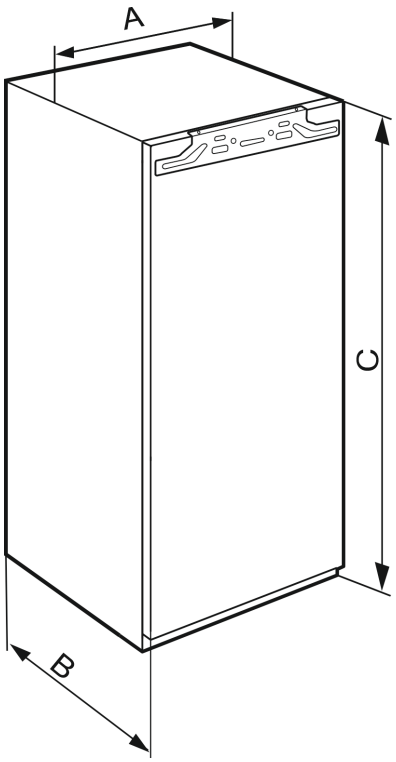

Fig. 2

IRBA.. 41..	
A (mm)	559
B (mm)	546
C (mm)	1213

IRBA.. 51.. / SIFNA.. 51..	
A (mm)	559
B (mm)	546
C (mm)	1770

4 Recess dimensions

4.1 Internal dimensions

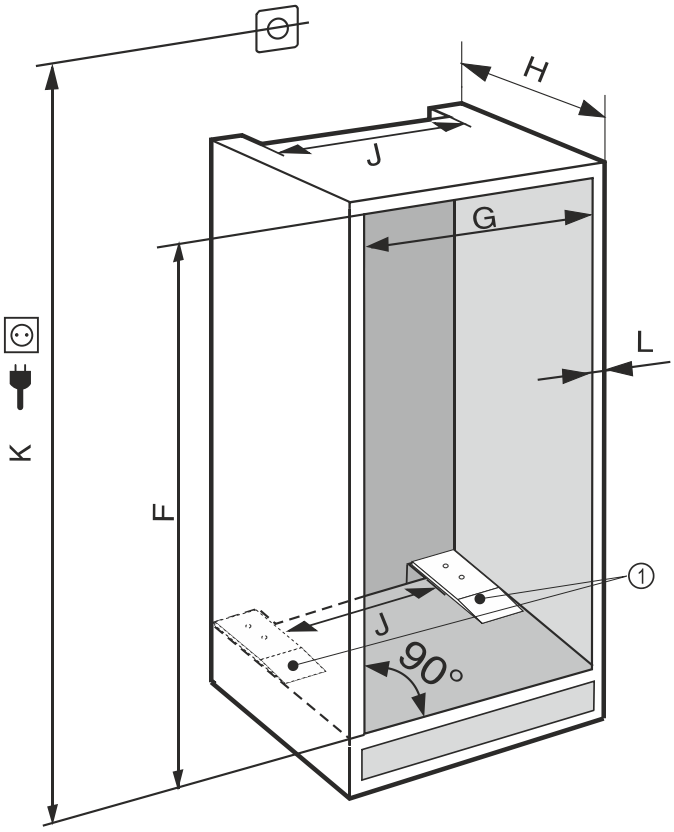

Fig. 3

(K) max. 2100 mm

(1) Installing the spacer plates is relevant to functionality.

Observe the following information for appliances with a permanent water connection:*

- Water connection (see 7 Water connection*)
- Connect the appliance to the water supply (see 15 Connecting the appliance to the water supply*)

IRBA.. 41..	
F (mm)	1220 to 1236
G (mm)	560 to 570
H (mm)	min. 555, recommended 560
J (mm)	min. 500
L (mm)	max. 19

IRBA.. 51.. / SIFNA.. 51..	
F (mm)	1777 to 1793
G (mm)	560 to 570
H (mm)	min. 555, recommended 560
J (mm)	min. 500
L (mm)	max. 19

The specified energy consumption was determined with a kitchen unit depth of 560 mm . The appliance will work properly at a kitchen unit depth of 550 mm , but with a slightly higher energy consumption.

- ▶ Check the wall thickness of adjacent units: It must be a minimum of 16 mm .

*** Depending on model and options**

- ▶ Only fit the appliance into stable, solid kitchen units. Secure the unit against tipping.
- ▶ Align the cabinets with a level and a try square. If necessary, level them by putting something underneath them.
- ▶ Make sure floor and the side panels of the cabinet are at right angles to each other.

5 Ventilation requirements

NOTICE
Covered vents!
Damage. Appliance can overheat, which can reduce the service life of various parts of the appliance and lead to functional impairments.
- ▶ Always ensure good ventilation.
- ▶ Always keep vents or ventilation grills in the appliance housing and in the kitchen structure (built-in appliance) unobstructed.
- ▶ Never block air vents of the fan.

Comply with the ventilation gaps:
- The depth of the ventilation shaft at the back of the cabinet must be at least 38 mm.
- At least 200 cm^2 is required for the ventilation gap cross sections in the plinth and the housing cabinet.
- Basically, the larger the ventilation cross-section, the more efficiently the appliance will run.

Sufficient ventilation is required for the operation of the appliance. The ventilation grids provided ensure an effective ventilation cross-section on the appliance of 200 cm^2. If you replace the ventilation grids with a cover plate the ventilation cross-section must be as least as large as the ventilation grid provided by the manufacturer.

6 Custom panel weights

NOTICE
An excessively heavy custom panel can potentially cause damage!
If the custom panel is too heavy, damage to the hinges cannot be ruled out, which may compromise the functionality of the unit.
- ▶ Before installing the custom panel, ensure the custom panel does not exceed the permissible weight.

Recess height (mm)	Appliance type	Maximum weight of the custom panel (kg)
1220	IRBA.. 41..	19
1780	IRBA.. 51.. SIFNA.. 51..	26

Single-door fridges and freezers

7 Water connection*

If your appliance has a fixed water connection, a hose is supplied with it.

Note
You can purchase a hose of a different length as an accessory.

Overview of dimensions for the water connection:	(see 7.1 Dimensions for the water connection)
Requirements for the water pressure:	(see 7.2 Water pressure)
Make the water connection:	(see 15 Connecting the appliance to the water supply*)

7.1 Dimensions for the water connection

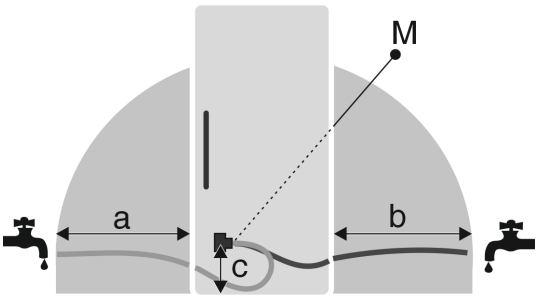

Fig. 4
(a) Maximum available hose length
(b) Maximum available hose length
(c) Distance of solenoid valve to floor
(M) Solenoid valve

a	b	c
~ 1200 mm	~ 1200 mm	~ 55 mm

7.2 Water pressure

The water connection line and solenoid valve of the appliance are suitable for a water pressure of up to 1 MPa (10 bar).

To ensure that the appliance functions correctly (flow rate, ice cube size, noise level), maintain the following water pressure:

Water pressure:	
bar	MPa
1.5 to 6.2	0.15 to 0.62

Water pressure if using the water filter:*	
bar*	MPa*
2.8 to 6.2	0.28 to 0.62

If the pressure is higher than 6.2 bar:
- ▶ Connect a pressure reducer.
- ▶ Make the water connection. (see 15 Connecting the appliance to the water supply*)

8 Transporting the appliance

Observe the following when transporting the appliance:
- ▶ Transport the appliance upright.
- ▶ Use two people when transporting the appliance.

During the first use:
- ▶ Transport the appliance packaged.

During appliance transport or at first use (e.g. when moving or cleaning):
- ▶ Empty the appliance.
- ▶ Secure the door against undesired opening.

9 Unpacking the appliance

If the appliance is damaged check with the supplier immediately before connecting it.

- ▶ Check the appliance and packaging for damage during transport. If you suspect any damage, please contact your supplier immediately.
- ▶ Remove all materials that could prevent it from being installed properly or prevent proper ventilation from the back or the side panels of the appliance.
- ▶ Remove all protective films from the appliance. Do not use sharp or pointed objects for this.

10 Setting up the appliance

CAUTION
Risk of injury due to heavy appliance!
▶ Have two people transport the appliance to its installation site.

WARNING
Danger of injury and damage due to the appliance being unstable!
The appliance can tip over.
▶ Secure the appliance as described in the instructions.

WARNING
Danger of fire and damage!
▶ Do not place devices that give off heat, e.g. microwaves, toasters, etc. on the appliance.

If possible, have a professional install the appliance in your kitchen cabinet unit.

Do not install the appliance without assistance.

10.1 After setup

▶ Remove all transport packaging.

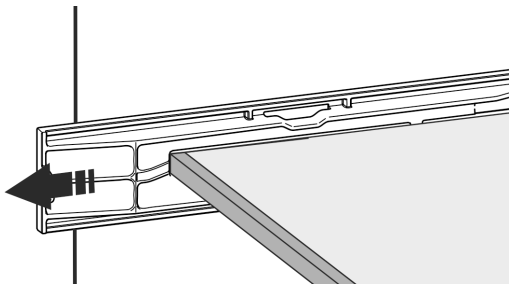

Fig. 5

▶ Pull off the transport lock on the appliance door.

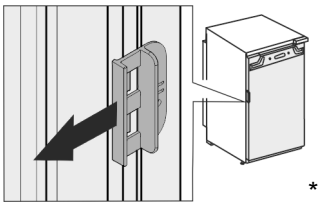

*

▶ Clean the appliance (see User Guide, Cleaning the appliance).

11 Disposal of packaging

WARNING
Danger of suffocation from packaging materials and films!
▶ Do not allow children to play with packaging materials.

The packaging is made from recyclable materials:
- Corrugated card/cardboard
- Parts made of foamed polystyrene
- Films and bags from polyethylene
- Packing bands from polypropylene
- Wood frame nailed together with a polyethylene window*

▶ Take the packaging material to an official collection point.

12 Explanatory symbols used

	There is the risk of injury when doing this! Obey the safety instructions!
	These instructions apply to several models. Only perform this step if it applies to your appliance.
	To install, please follow the detailed description in the Guide.
	This section applies either to a single-door appliance or a double-door appliance.
	Choose one of the options: Appliance with right-hinged door or appliance with left-hinged door.
	Installation step necessary with IceMaker and/or InfinitySpring.
	Loosen or tighten screws slightly.
	Tighten the screws fully.
	Check to see if the next step applies for your model.
	Check the components are in correctly.
	Measure the specified measurement and adjust if necessary.
	Installation tool: Meter stick

* Depending on model and options

  	Tool for assembly: Cordless screwdriver and attachments We recommend a longer bit insert to reach the screws better.
	Tool for assembly: Spirit level
	Tool for assembly: Size 7 and size 10 spanner
	Two people are required for this step.
	This step takes place at the selected location of the appliance.
	Aid for assembly: String
	Aid for assembly: Square
	Aid for assembly: Screwdriver
	Aid for assembly: Scissors
	Aid for assembly: Non-permanent marker pen
	Accessory kit: Remove components
	Dispose of components that are no longer needed.

13 **** freezer compartment door*

It is very easy to reposition the hinge of the **** freezer compartment door if the main door hinge is swapped. If the main door of the appliance can be opened to more than 115° (1), you can open the freezer compartment without repositioning the hinge. If the opening angle (2) of the appliance door is less than this, the hinge must be repositioned.

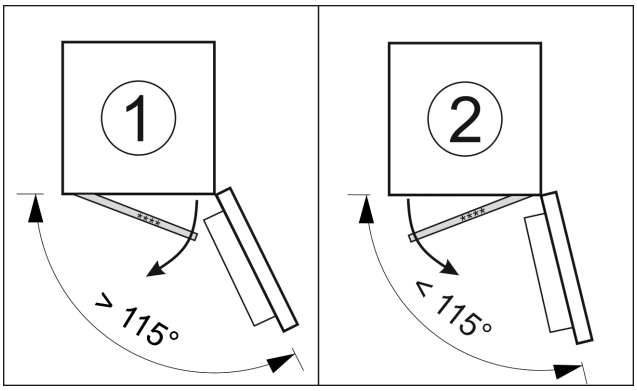

Fig. 6

13.1 Moving the door hinge

The slider for moving the door hinge is located on the back of the **** freezer compartment door at the bottom.

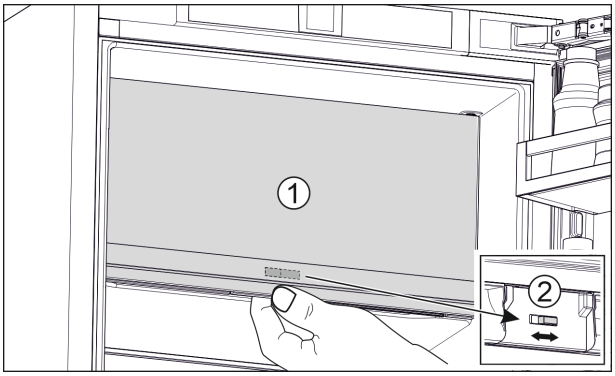

Fig. 7

▶ Close the **** freezer compartment door (1).
▶ Grab the **** freezer compartment door from below.
▶ Move the slider (2) either to the right or to the left.

14 Reversing the door

A separate accessory kit is available from customer service for reversing the door hinge.

Liebherr recommends:

▶ Have the door hinge reversed by a service technician.

15 Connecting the appliance to the water supply*

Make sure that the following requirements are fulfilled:

❑ The dimensions for the water supply connection are known and complied with. (see 7.1 Dimensions for the water connection)

❑ The correct water pressure is maintained. (see 7.1 Dimensions for the water connection)

- ❑ Water is supplied to the appliance via a cold water pipe that can withstand the operating pressure and is connected to the drinking water supply.
- ❑ All equipment and devices used for the water supply comply with the applicable regulations in the country of use.
- ❑ The back of the appliance is accessible so that you can connect the appliance to the drinking water supply.
- ❑ You are using the supplied hose. Old hoses have been disposed of.
- ❑ The hose connector contains a screen filter with a seal.
- ❑ There is a faucet between the hose line and the domestic water connection so that you can turn off the water supply if necessary.
- ❑ The faucet is not directly behind the appliance and is easily accessible. This way, you can push the appliance as far as possible into the cabinet recess and can quickly turn off the faucet if necessary.

WARNING
Risk of electric shock from water!
- ▶ Before connecting to the water hose: Disconnect the appliance from the mains.
- ▶ Before connecting to water lines: Shut off the water supply.
- ▶ Make sure that only qualified personnel connect the device to the drinking water supply.

WARNING
Risk of poisoning due to contaminated water!
- ▶ Connect to potable water supply only.

15.1 Connecting the hose

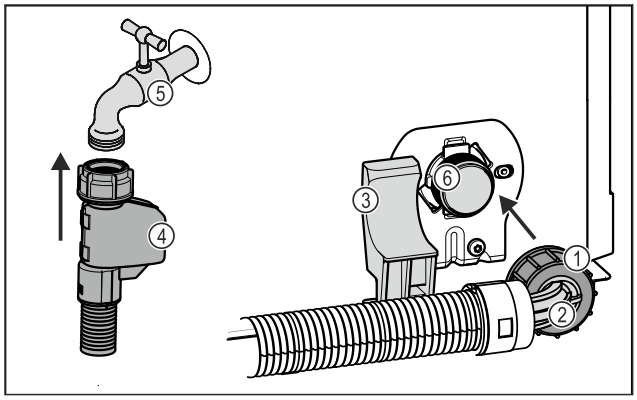

Fig. 8

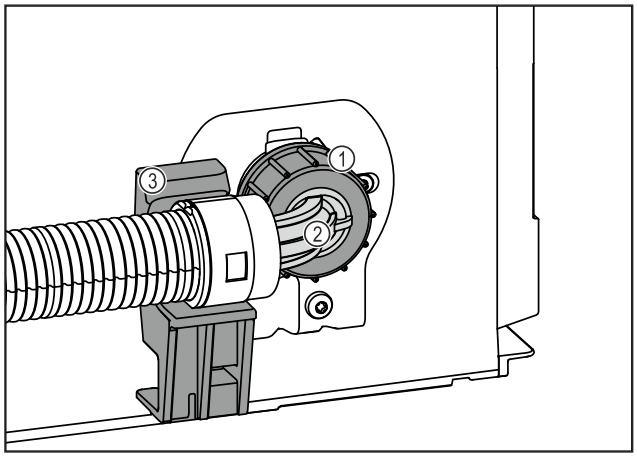

Fig. 8

(1) Nut
(2) Angled hose end
(3) Bracket
(4) Straight hose end
(5) Faucet
(6) Solenoid valve: The solenoid valve is at the bottom on the back of the appliance. It has an R3/4 connecting thread.

NOTICE
Risk of damage from incorrect installation!
- ▶ Do not damage or kink the hose.
- ▶ Do not damage or kink the hose during installation in the cabinet recess.

Connecting the hose to the appliance:
- ▶ Position and hold the angled hose end *Fig. 8 (2)* horizontally on the bracket *Fig. 8 (3)*.
- ▶ Screw on the nut *Fig. 8 (1)* on by hand until it is firmly in place.
- ▷ The hose is connected to the appliance.

Connecting the hose to the faucet:
- ▶ Connect the straight hose end *Fig. 8 (4)* to the faucet *Fig. 8 (5)*.
- ▷ The hose is connected to the faucet.

15.2 Check the water system

Before you completely install the appliance in the cabinet recess, Liebherr recommends checking the water system for leaks.
- ▶ Put in the InfinitySpring water tank. (see 18 Water tank*) *
- ▶ Put in the InfinitySpring water filter. (see 19 Water filter*) *
- ▶ Slowly turn on the faucet.
- ▶ Check the hose, water feed and connections for leaks.
- ▷ The water system has now been checked for leaks.
- ▷ The water system is not leaking: You can install the appliance completely in the cabinet recess.

Note
InfinitySpring: Before the first use, you must put the InfinitySpring into operation. To do this you must bleed and clean the water system. (see Quick Start Guide or operating instructions)*

IceMaker: Before the first use, you must clean the IceMaker. (see Quick Start Guide or operating instructions)*

16 Installing the appliance in the recess

The appliance is installed using the following main steps:
1. Have your tools ready. *Fig. 9 ()*
2. Check the assembly parts in the accessory kit. *Fig. 10 ()* to *Fig. 16 ()*
3. Prepare the recess and appliance.
4. Align the appliance in the recess.
5. Temporarily fasten the knocking sensor.
6. Put in the covers and height adjuster.
7. Mount the cabinet front.
8. Attach the knocking sensor.
9. Install the covers and welting.
10. Adjust the sensitivity of the knocking sensor.
11. Check the installation.

Tools

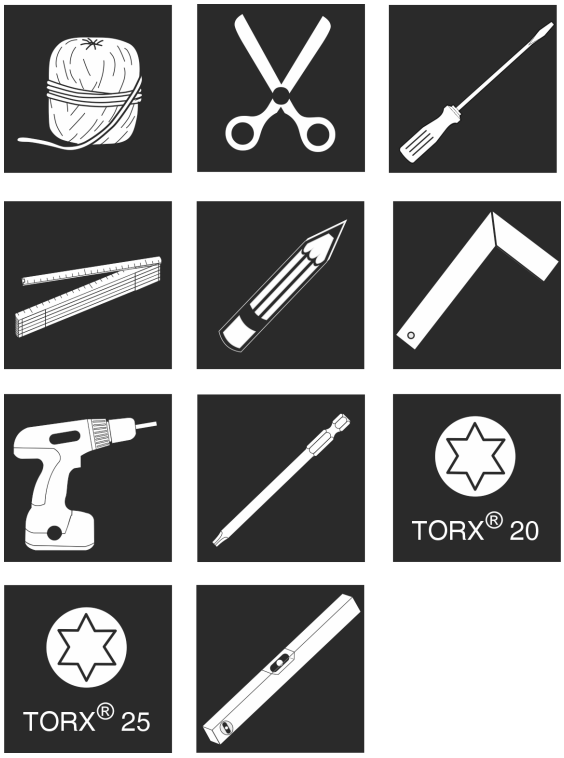

Fig. 9

Assembly parts in the accessory kit *Fig. 10 ()* to *Fig. 16 ()*

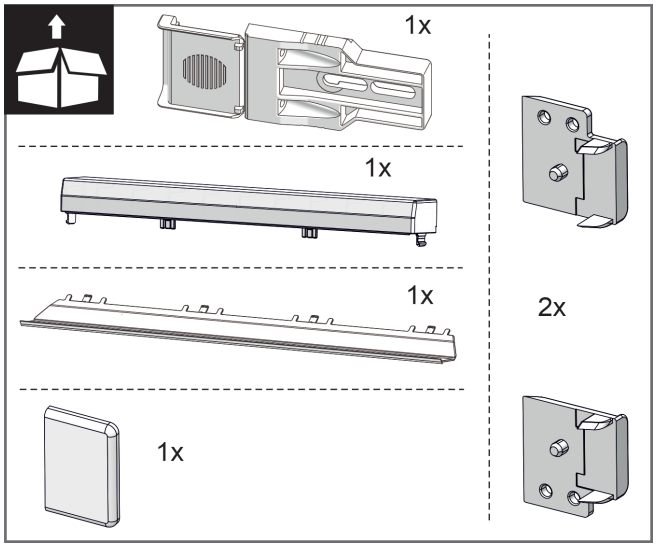

Fig. 10

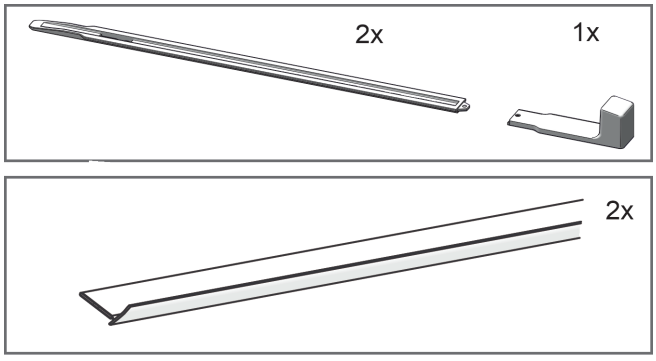

Fig. 11

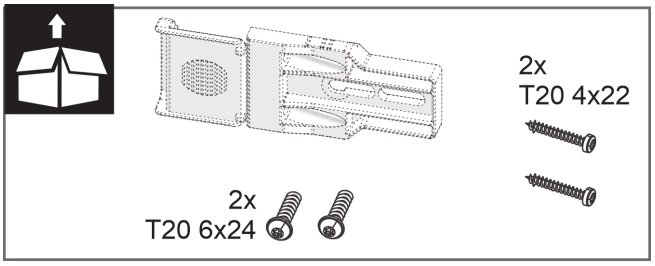

Fig. 12

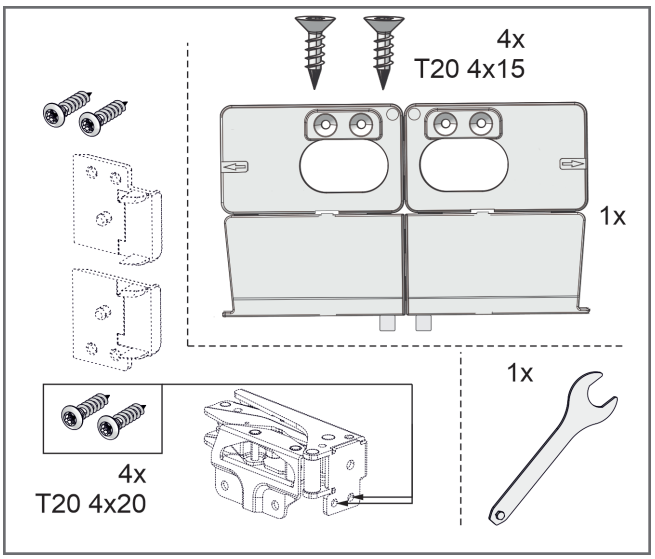

Fig. 13

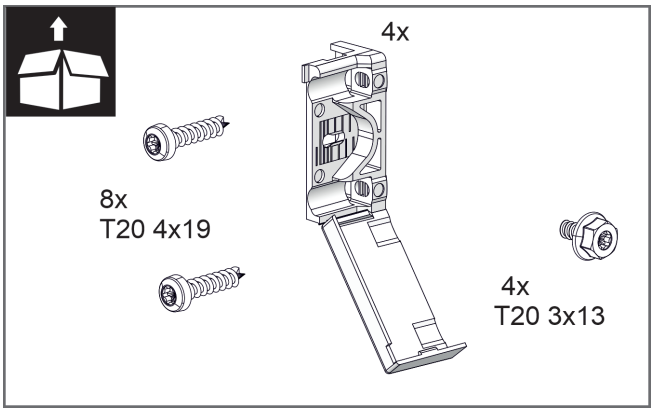

Fig. 14

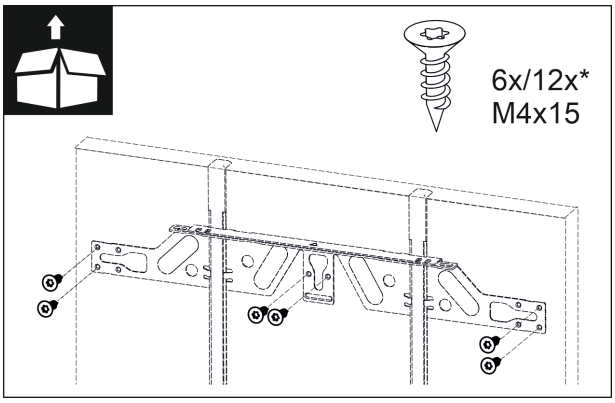

Fig. 15

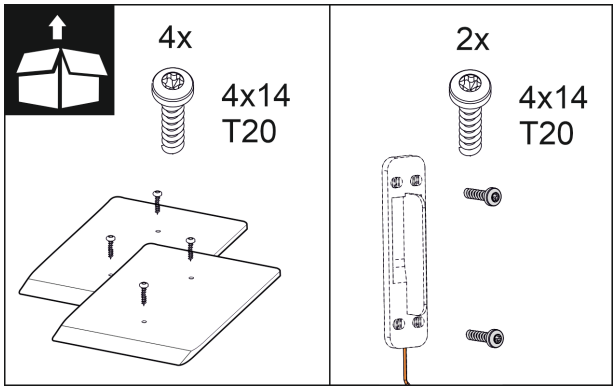

Fig. 16

16.1 Preparing the recess and the appliance

NOTICE
Risk of damage if the door scrapes on the floor!
Damage to the door's drive unit. If the spacer plates are not installed in the recess, the distance between the door and the floor is too low. The door may scrape on the floor and damage parts of the drive unit in the process.

▶ Install the spacer plates provided onto the floor of the recess.

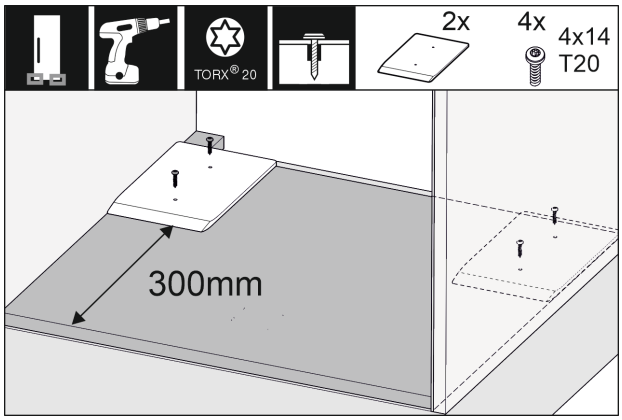

Fig. 17

▶ Fit the supplied spacer plates in the left and right of the cabinet recess.

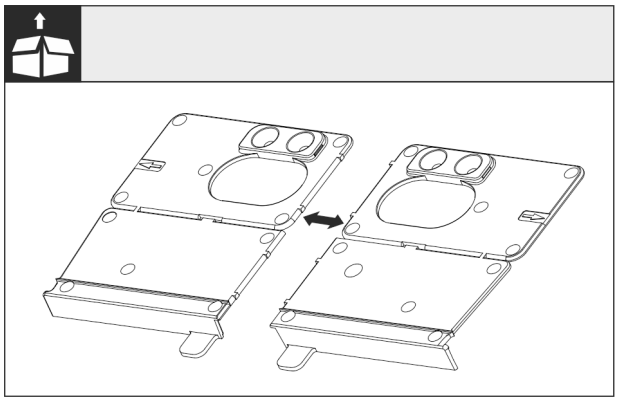

Fig. 18

▶ Separate the floor mounting bracket at the perforation.

NOTICE
Installation depth of the appliance.

▶ Using the mounting bracket ensures the correct installation depth of the appliance.

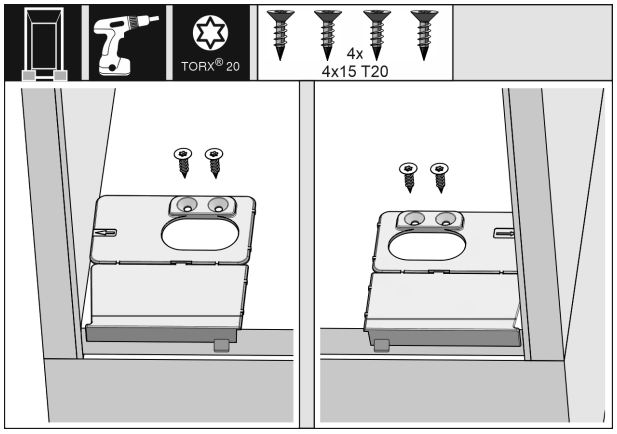

Fig. 19

▶ Screw the mounting brackets on the left and right of the recess floor, flush to the side wall.

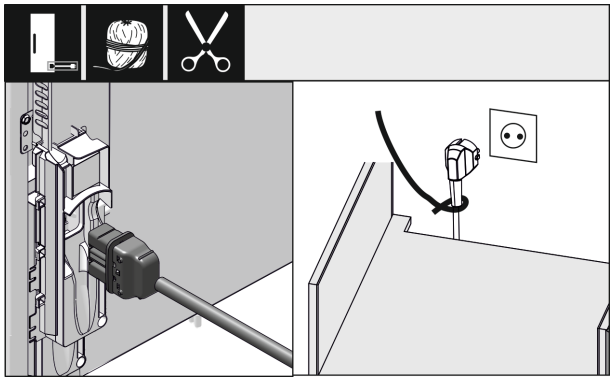

Fig. 20

▶ Remove the power cable from the enclosed package.
▶ Fully insert the IEC socket of the power cable completely into the appliance plug on the rear side of the appliance. Ensure the IEC socket is firmly in place.
▶ Use a string to route the power plug to a socket outlet that is freely accessible.

NOTICE
Risk of damage if the door opens automatically!
Damage to the door's drive unit. If the appliance has not yet been completely installed in the kitchen cabinet, but you have already connected it to the power supply, the door may open unexpectedly. If the distance between the door and the floor is too low, the door may scrape on the floor and damage parts of the drive unit in the process.

▶ Do not plug the power plug into the outlet until the appliance has been properly installed.

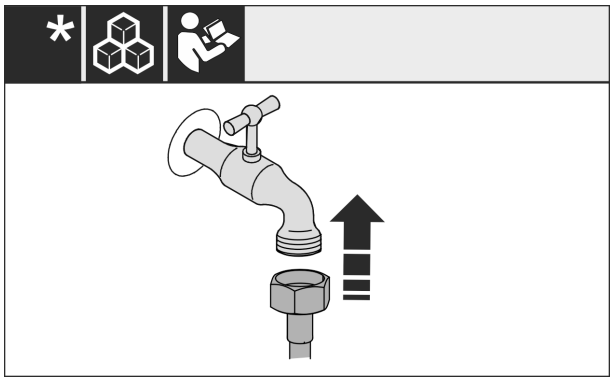

Fig. 21

▶ If necessary, install the water connection at this point according to the operating instructions.

*** Depending on model and options**

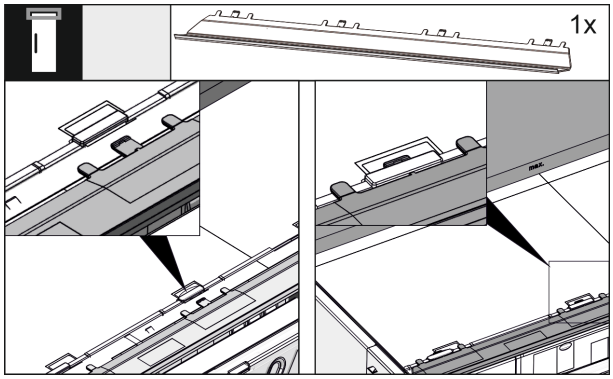

Fig. 22

▶ Insert the leveling panel on the top of the appliance. The panel can be moved to both sides.

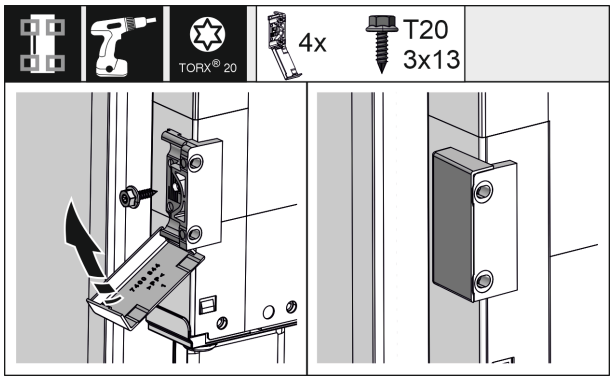

Fig. 23

▶ For easier assembly, fit the mounting bracket before pushing the appliance into the cabinet recess. For a large door, use four mounting brackets. After assembly, fold the covers onto the bracket.

16.2 Aligning the appliance in the recess

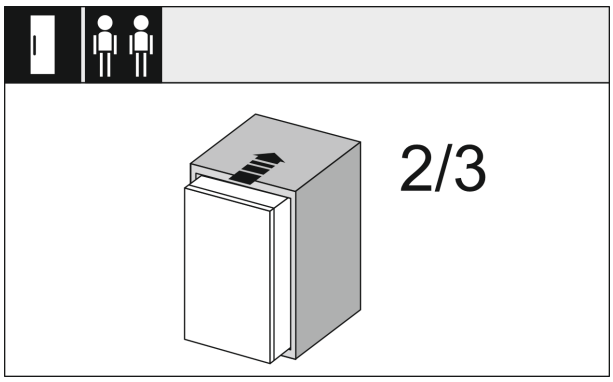

Fig. 24

▶ Push the appliance 2/3 of the way into the recess.

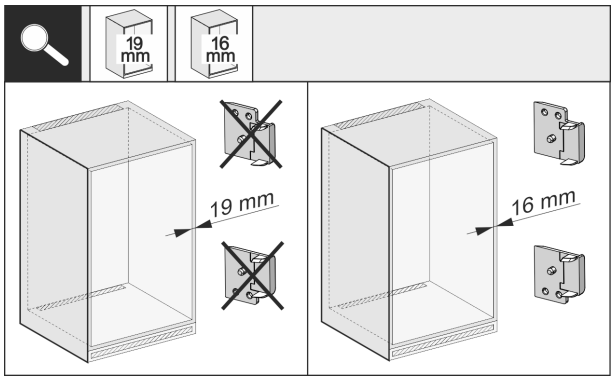

Fig. 25

▶ Check whether the unit side wall is 16 mm or 19 mm thick.

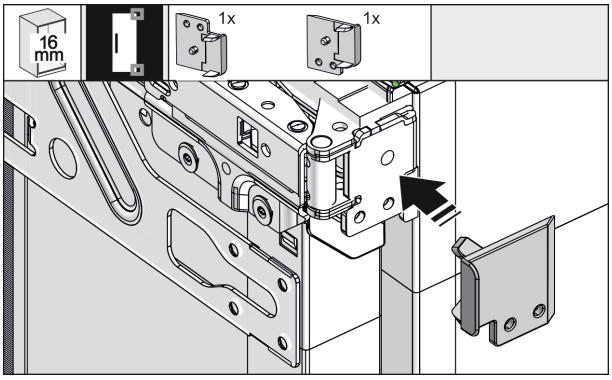

Fig. 26

▶ For unit walls which are 16 mm thick: Clip a spacer on all hinges. No spacer is required if the unit walls are 19 mm thick.

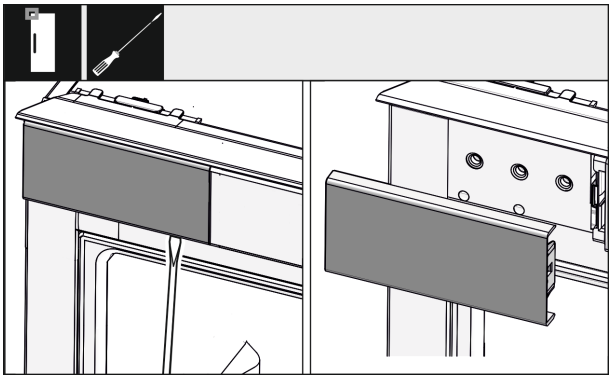

Fig. 27

▶ Use a screwdriver to loosen the cover at the top left and remove it.

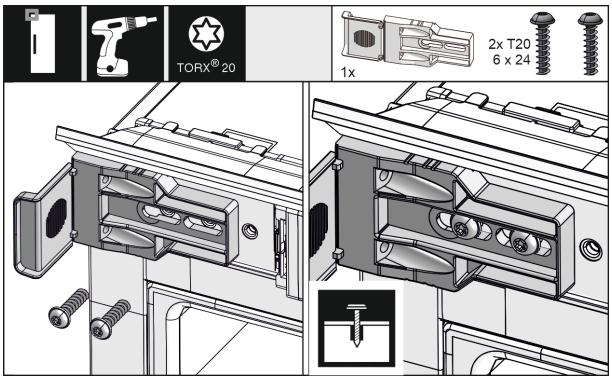

Fig. 28

▶ Loosely screw on the mounting bracket. The bracket should still be able to move slightly.

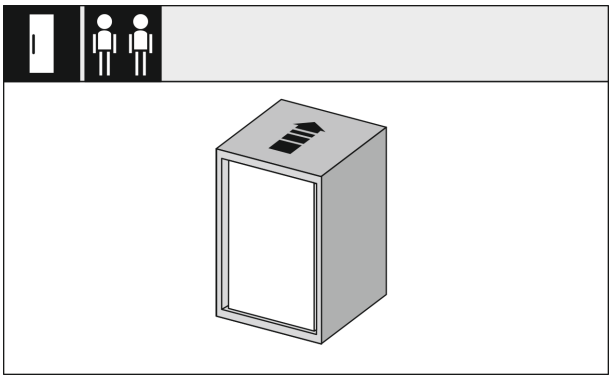

Fig. 29

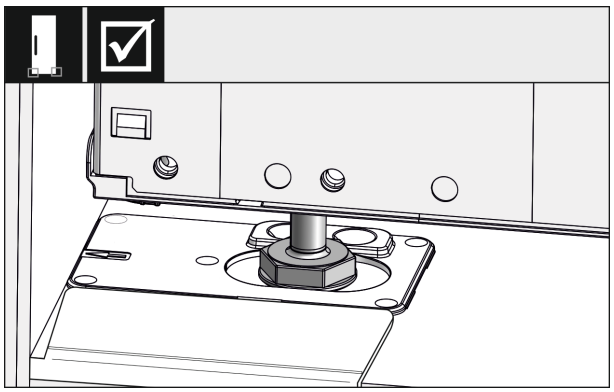

Fig. 30

WARNING

Risk of fire from short circuit!

- ▶ If you are pushing the appliance into the recess: Do not kink, trap, or damage the power cable.
- ▶ Do not operate the appliance with a defective power cable.

- ▶ Insert the appliance all the way into the unit recess. The adjustable feet must rest in the recesses in the brackets on both sides.

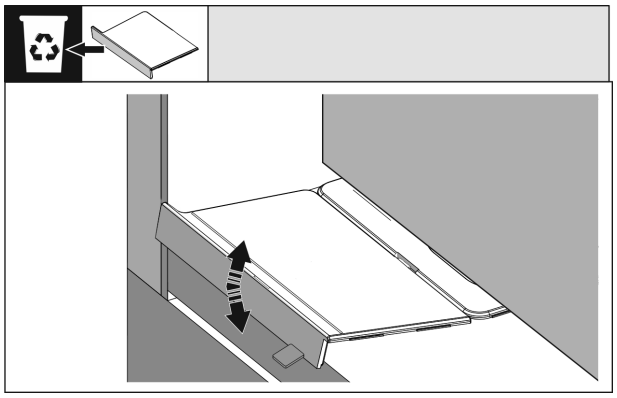

Fig. 31

- ▶ Remove the floor mounting bracket stopper. Loosen the stopper by moving it and, if necessary, pull it off using pliers.

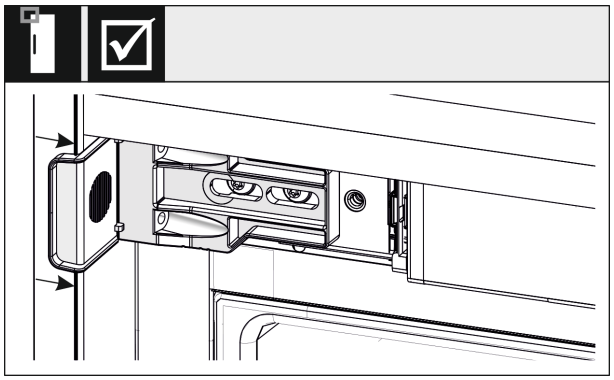

Fig. 32

- ▶ Check that the appliance is flush in the cabinet recess. The mounting bracket must be attached to the side wall of the cabinet recess.

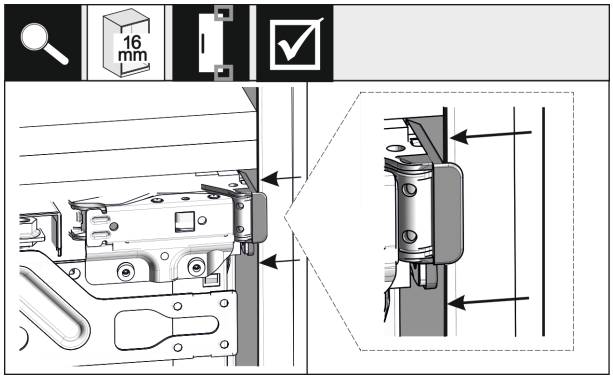

Fig. 33

- ▶ For unit side walls which are 16 mm thick, the spacers fit against the unit recess on the hinge side.

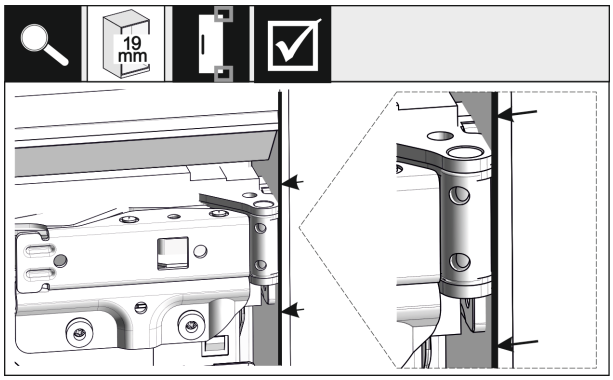

Fig. 34

- ▶ For unit side walls which are 19 mm thick, the front sides of the hinges are positioned flush against the front of the unit side wall.

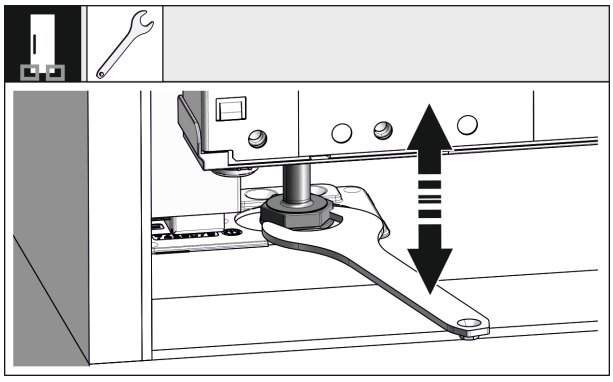

Fig. 35

- ▶ If necessary, use the adjustable feet to correct the tilt of the appliance.

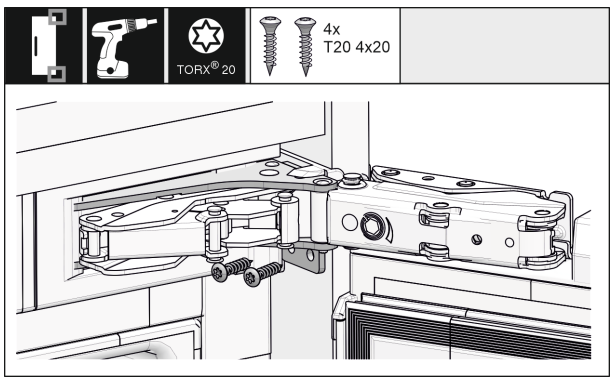

Fig. 36

- ▶ Screw on the appliance on the hinge side.

*** Depending on model and options**

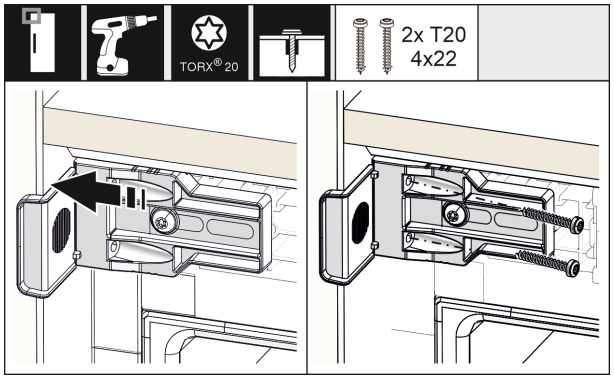

Fig. 37

▶ Move the bracket so it sits flush on the side wall of the cabinet recess. Tighten all the screws securely.

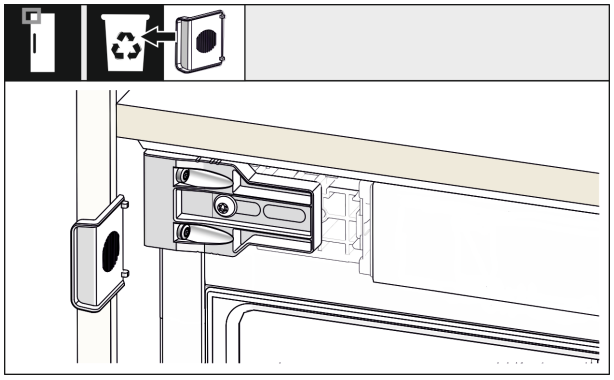

Fig. 38

▶ Break off the stop from the bracket on the handle side and dispose of it.

16.3 Temporarily fastening the knocking sensor

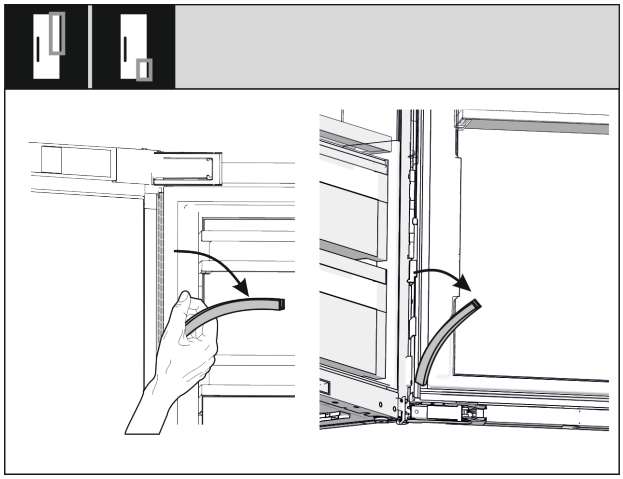

Fig. 39

▶ Pull of the top and bottom cover strip of the cable duct and put them aside. You need space behind the cover strips for installing the knocking sensor and the cabinet front.

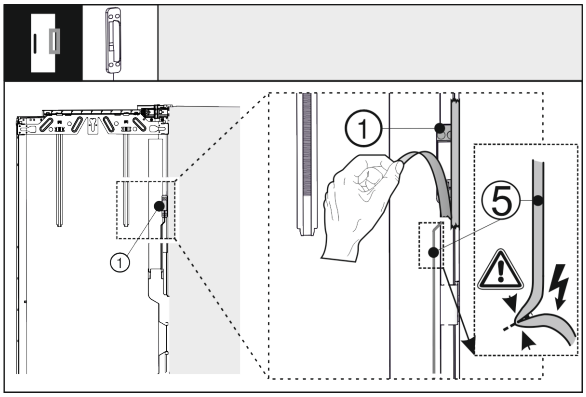

Fig. 40

▶ Loosen the knocking sensor *Fig. 40 (1)* from the outside door. Do not damage the connection cable *Fig. 40 (5)*.

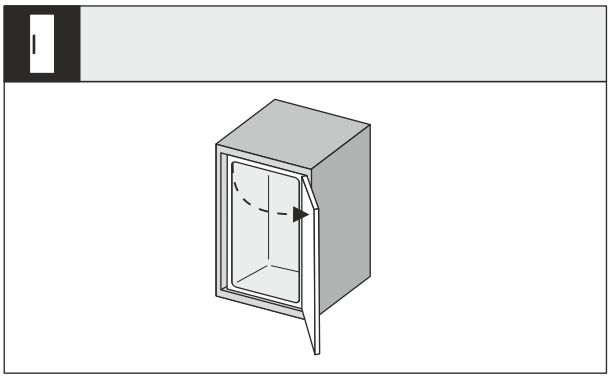

Fig. 41

▶ Open the appliance door wide.

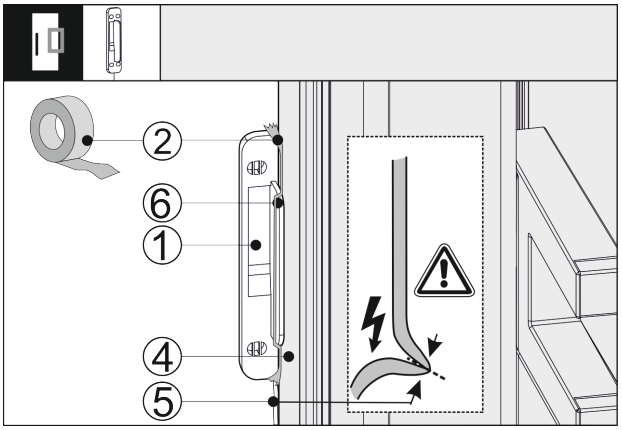

Fig. 42

▶ Place the knocking sensor *Fig. 42 (1)* on the side of the appliance door *Fig. 42 (4)* so that the stop *Fig. 42 (6)* touches the appliance door *Fig. 42 (4)*. The sensor cable *Fig. 42 (5)* is slightly tensioned and also touches the appliance door *Fig. 42 (4)*.

▶ Attach the knocking sensor *Fig. 42 (1)* with adhesive table *Fig. 42 (2)*. The knocking sensor is later screwed onto the cabinet front.

16.4 Inserting the covers and height adjuster

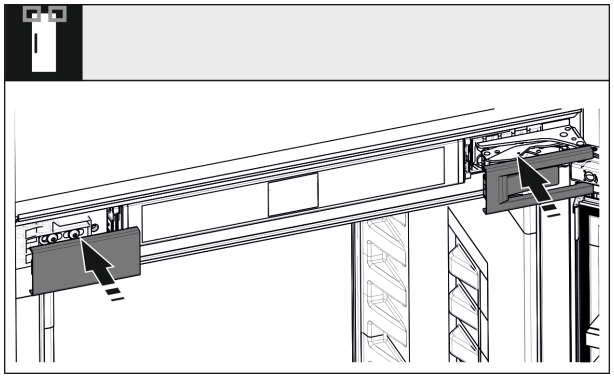

Fig. 43

▶ Put on the covers.

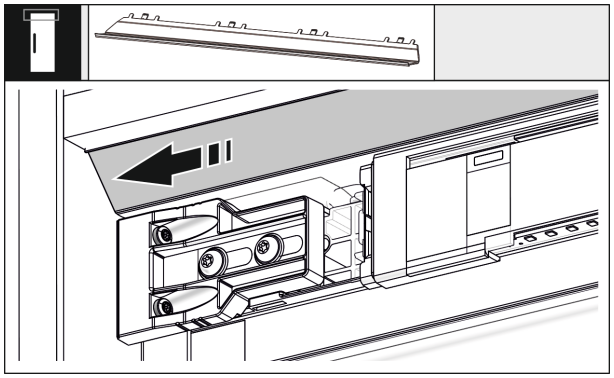

Fig. 44

▶ Slide the panel so that it sits flush with the side of the cabinet wall.

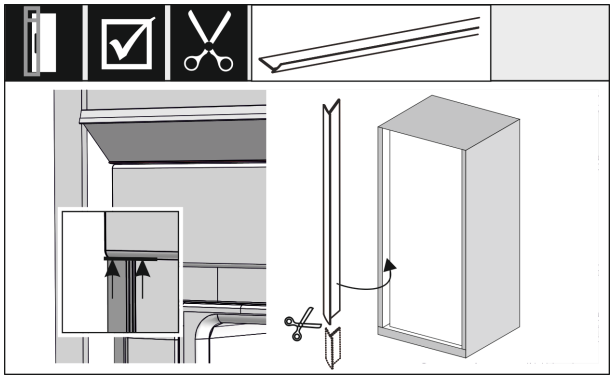

Fig. 45

▶ The sealing strip is magnetic. Position the sealing strip below the top cover and press it in. If necessary, shorten the sealing strip to the required length with a sharp pair of scissors.

Install leveling rails if the recess height is greater than 1400 mm:



Fig. 46

You must install leveling rails underneath the appliance for any recess height that is greater than 1400 mm. The leveling rails **minimize the sound level**. Two leveling rails and a mounting handle are included in the enclosed package as standard for recess heights above 1400 mm.

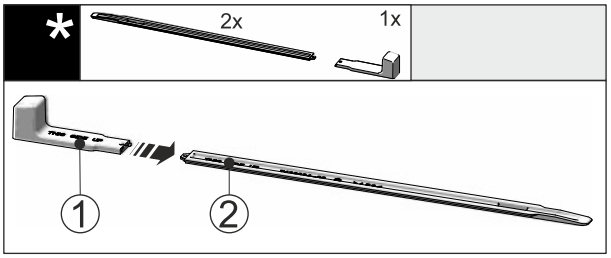

Fig. 47

▶ Insert the mounting handle *Fig. 47 (1)* into the leveling rail *Fig. 47 (2)*.

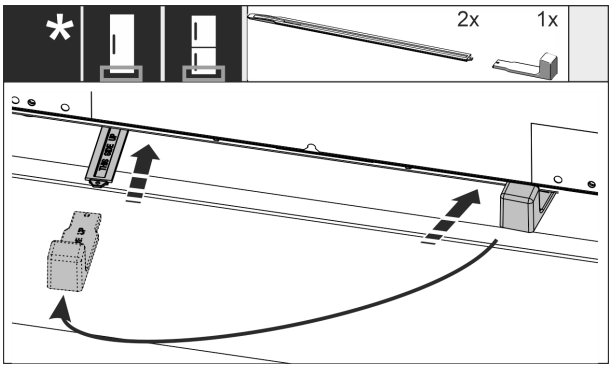

Fig. 48

▶ Insert the leveling rail into the guide underneath the appliance floor until it reaches the stop.

▶ Pull off the mounting handle and insert it into the second leveling rail.

▶ Proceed in the same manner with the second leveling rail.

16.5 Mounting the front of the cabinet

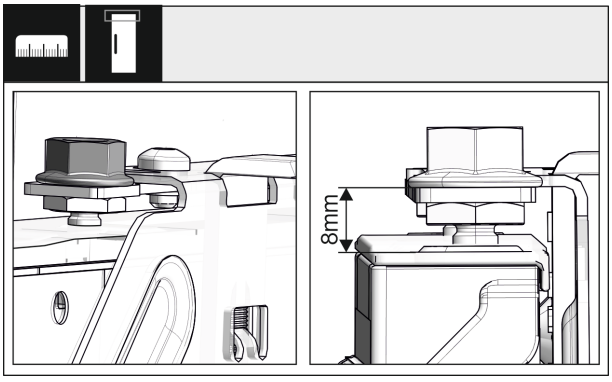

Fig. 49

*** Depending on model and options**

▶ Close the door and check the preset of 8 mm from the upper edge of the appliance door to the crosspiece support

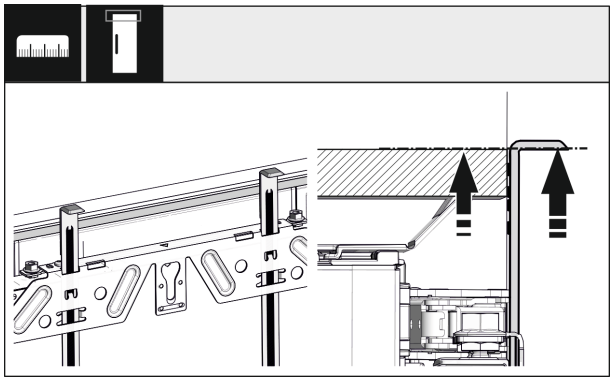

Fig. 50

▶ Push the fitting aids to the height of the custom door panel. The bottom of the fitting aid must be level with the top of the custom door panel to be mounted.

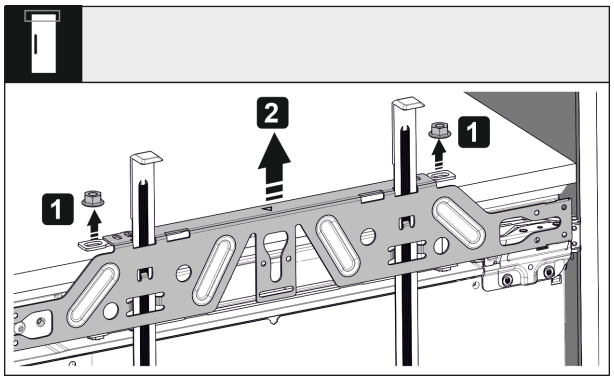

Fig. 51

▶ Loosen the counter nut and remove the crosspiece.

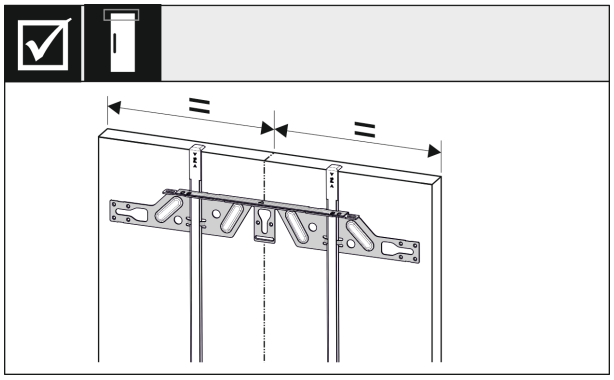

Fig. 52

▶ Hang the crosspiece on the inside of the custom door panel and make sure it is central.

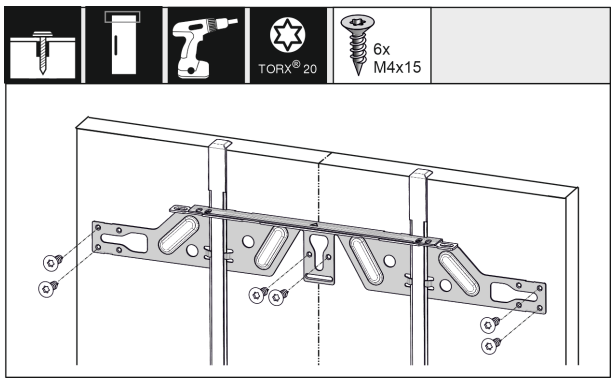

Fig. 53

▶ Fix the crosspiece using at least 6 screws for chipboard doors and at least 4 screws for panel doors.

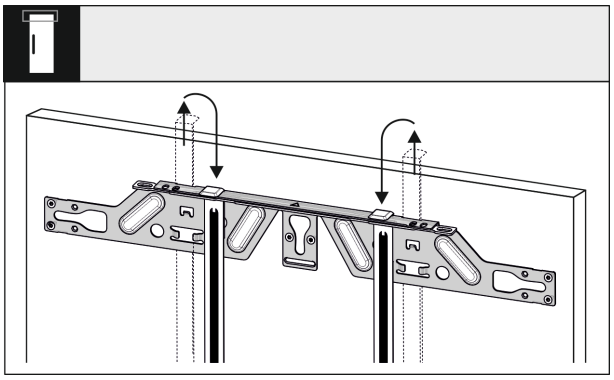

Fig. 54

▶ Pull out the fitting aids, turn them around and put them in the adjacent opening.

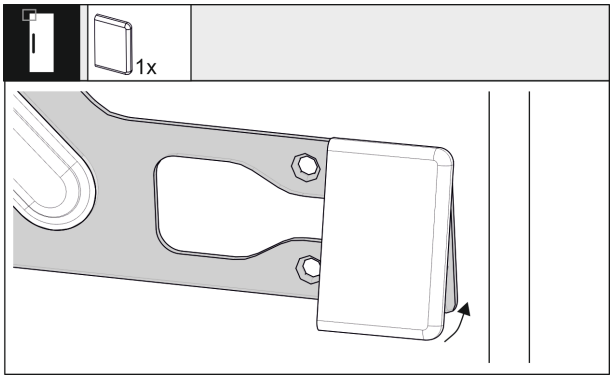

Fig. 55

▶ Clip the cover on the crosspiece on the handle side.

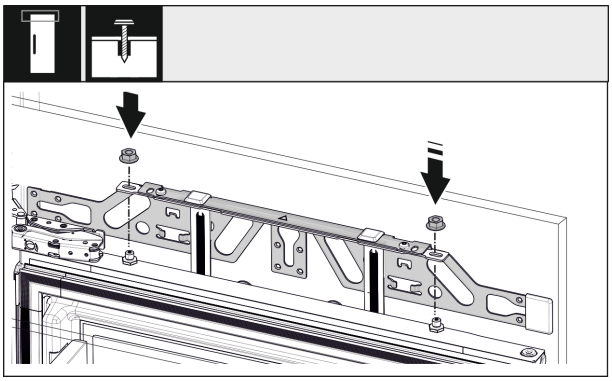

Fig. 56

▶ Attach the custom door panel and loosely screw the lock nuts onto the adjusting bolts.

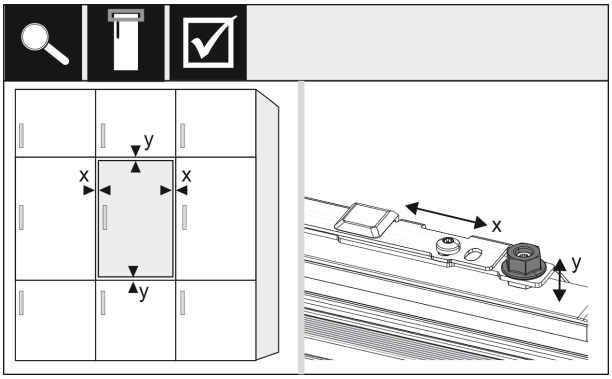

Fig. 57

▶ Align the custom door panel in the X and Y direction using the adjusting bolts.

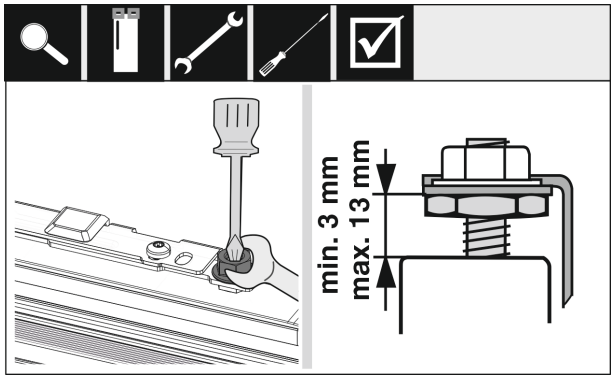

Fig. 58

▶ Screw on the lock nuts and check the height.

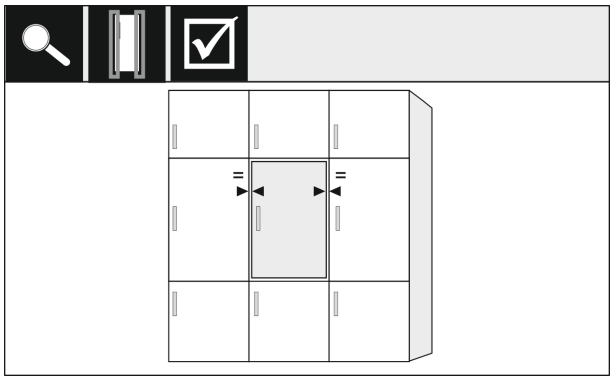

Fig. 59

▶ Check the gap between the door and the surrounding custom door panels. For unit fronts thicker than 19 mm, take account of the dimensions and advice in the **Unit fronts** section.

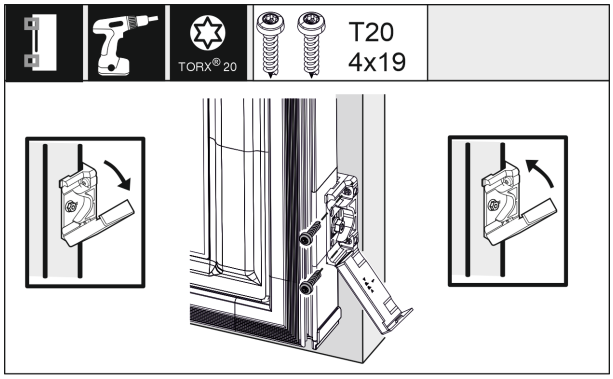

Fig. 60

▶ Open the cover to fit the mounting bracket on the custom door panel. Align the front edge of the mounting bracket parallel with the custom door panel edge and screw the bracket down tightly. Fold up the cover.

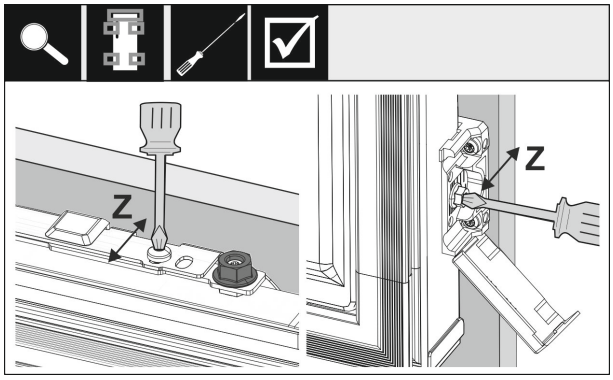

Fig. 61

Align the unit custom door panel the Z direction:

▶ Loosen the adjusting screw on the crosspiece and the screw on the mounting bracket.

▶ Move the door.

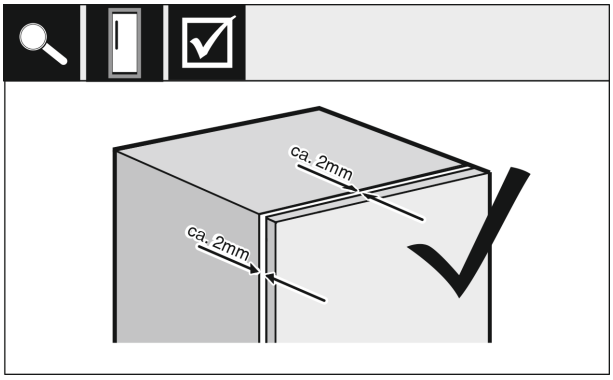

Fig. 62

▶ Check the gap between the custom door panel and the unit body.

▶ Check all screws and retighten them if necessary.

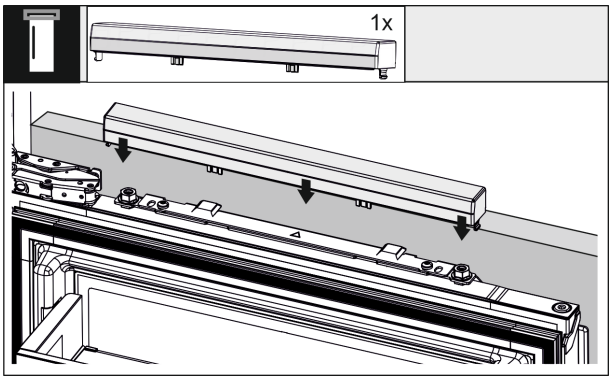

Fig. 63

▶ Clip the top cover on.

16.6 Fastening the knocking sensor

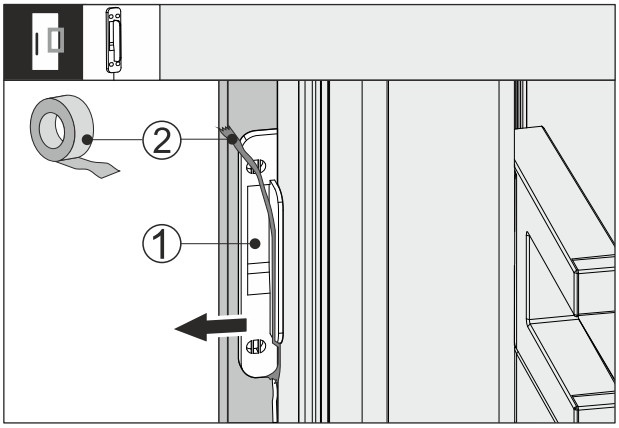

Fig. 64

▶ Remove the adhesive tape *Fig. 64 (2)* from the knocking sensor *Fig. 64 (1)*.

▶ Carefully remove the knocking sensor between the cabinet front and the appliance door.

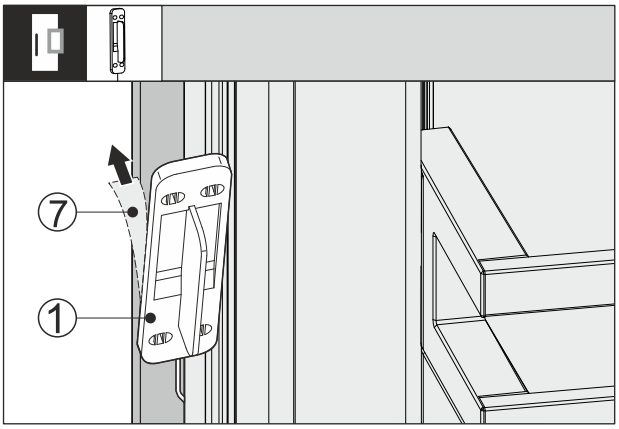

Fig. 65

▶ Pull off the protective film *Fig. 65 (7)* on the back of the knocking sensor *Fig. 65 (1)*.

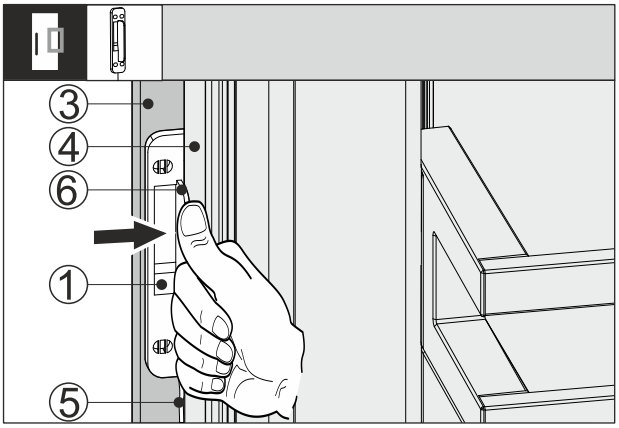

Fig. 66

▶ Push the knocking sensor *Fig. 66 (1)* between the cabinet front *Fig. 66 (3)* and appliance door *Fig. 66 (4)* so that the cable *Fig. 66 (5)* is slightly tensioned. The stop *Fig. 66 (6)* of the knocking sensor is touching the appliance door *Fig. 66 (4)*.

▶ Press the knocking sensor *Fig. 66 (1)* onto the cabinet front *Fig. 66 (3)*.

▷ Knocking sensor *Fig. 66 (1)* is glued on. Gluing the knocking sensor on optimizes the transmission of the knocking signal.

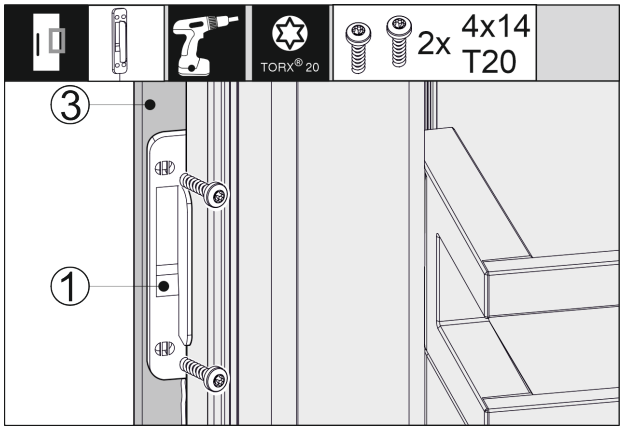

Fig. 67

A permanent attachment of the knocking sensor *Fig. 66 (1)* increases the service life.

▶ Screw the knocking sensor *Fig. 66 (1)* onto the cabinet front using the supplied screws *Fig. 66 (3)*.

▷ Knocking sensor is screwed on.

16.7 Installing covers and welting

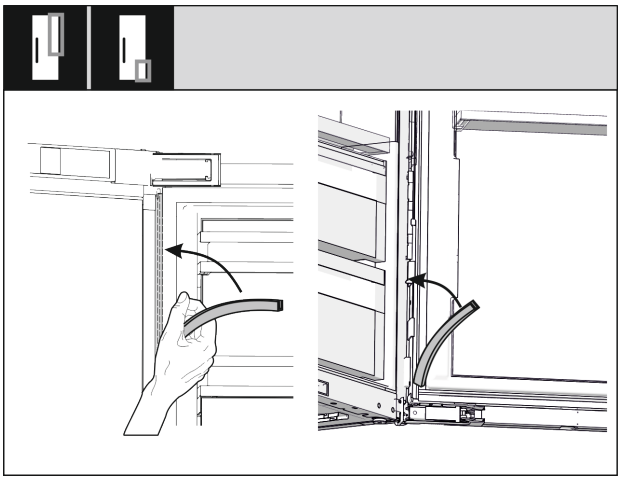

Fig. 68

▶ Position the long cover on the hinge side and press it on.

▶ Position the short cover on the hinge side and press it on.

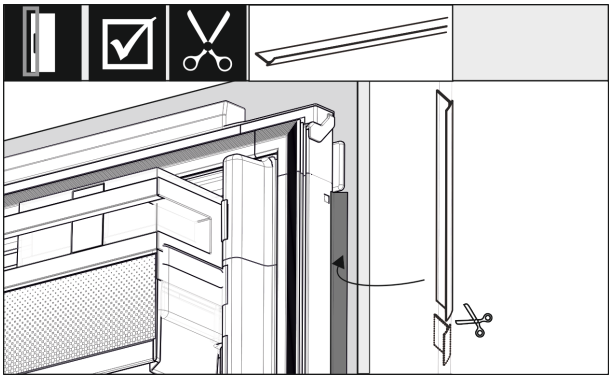

Fig. 69

▶ Adjust the length of the welting, cut it and insert it between the door of the cabinet front and the appliance door.

16.8 Setting the sensitivity of the knocking sensor

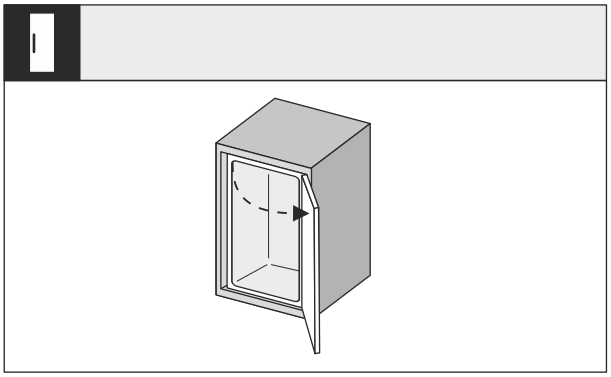

Fig. 70

▶ Open the appliance door wide.

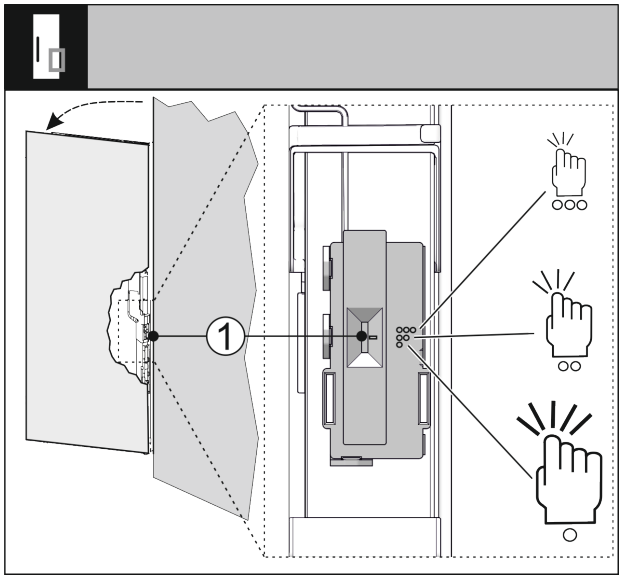

Fig. 71

You can adjust the sensitivity of the knocking sensor with a switch *Fig. 71 (1)*. The switch is on the hinge side on the lower third of the door.

Switch position	Symbol	Meaning
High	◯◯◯	Highly sensitive, slight knocking is sufficient.
Medium	◯◯	Medium sensitivity, less knocking is required. This is the default setting.
Low	◯	Less sensitive, strong knocking is required.

▶ Slide the switch *Fig. 71 (1)* to the desired switch position.

16.9 Checking the installation

▶ Check the following points to make sure that the appliance is properly installed. Otherwise, there might be ice buildup and/or condensation that could cause malfunctions.
▷ The door must close properly.
▷ The custom door panel must not touch the body of the unit.
▷ The seal on the upper corner on the handle side must be fitted securely.
▷ The spacer plates are screwed into the recess.

17 Cabinet fronts

17.1 Dimensions

Depending on your model, you will need one or two cabinet doors. The size of the cabinet door(s) depends on the overall recess size and cabinet unit thickness.

Note
Observe the corresponding appliance and niche dimensions as well as the installation sketches .

General requirements:

- Please note our recommendations for the specific appliance relating to size and weight for fixed door installation (see 6 Custom panel weights) .
- The body of the unit should be at least 16 mm thick but not more than 19 mm.
- When mounting a 2-door cabinet door, observe the recommended clearance.

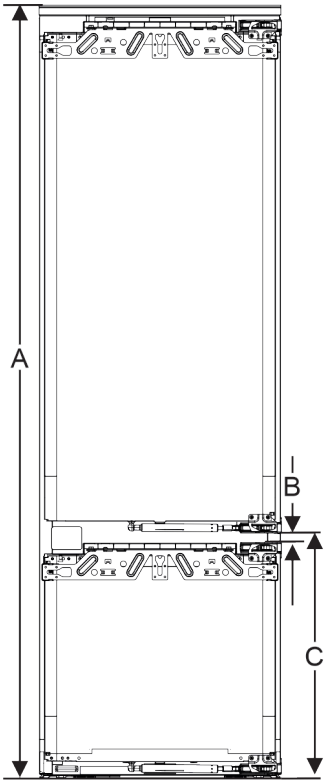

Fig. 72 Clearances for a 2-door cabinet door

Recess height 178-2 drawers	
Appliance height (A) (mm)	1770
Distance (B) (mm)	15
Clearance (C) door-on-door (mm)	549 + 15

Recess height 178-3 drawers	
Appliance height (A) (mm)	1770
Distance (B) (mm)	15
Clearance (C) door-on-door (mm)	695 + 15

Other cabinet door above, below or next to it:

- The vertical gap between custom panels must be 4 mm.
- The horizontal gap between custom panels must be 4 mm. Check the risk of them clashing here. (see 17.3 Setting the clearance to avoid collision)

Weight and hinges:

- For heavy cabinet fronts, the hinge is subject to a heavy load. The hinge may be damaged. Here, observe the maximum weight specifications for your appliance in the cabinet front weights chapter (see 6 Custom panel weights) .

- If the cabinet front exceeds the maximum permitted weight, an appliance with door-tracking device can help by loading the weight over several concealed hinges on the cabinet.
- If you use long unit fronts that protrude far above the appliances, we recommend an additional door hinge (e.g. Kamat), which must have the same pivot point as the fixed door hinge used with your appliance. By using another hinge (Kamat), the weight is shared over several points. The use of a milled compensating fastening is recommended for high unit fronts to counteract warping (convex/concave).

17.2 Mounting the cabinet front(s)

When installing, note:

- Cabinet front must be installed symmetrically to the refrigerator door.
- Adjoining cabinet front is exactly level.
- Adjoining cabinet front has the same edge radius as the front of the appliance.
- Cabinet front is flat and tension-free.
- The front panel has a minimum depth setting of approx. 2 mm to the body.

▶ Install the appliance in the recess.
▶ Fasten the front panel to the appliance door.
▶ Check that the front panel can close unobstructed. (see 17.3 Setting the clearance to avoid collision)

17.3 Setting the clearance to avoid collision

After installing the cabinet front(s), check that the cabinet fronts do not collide.

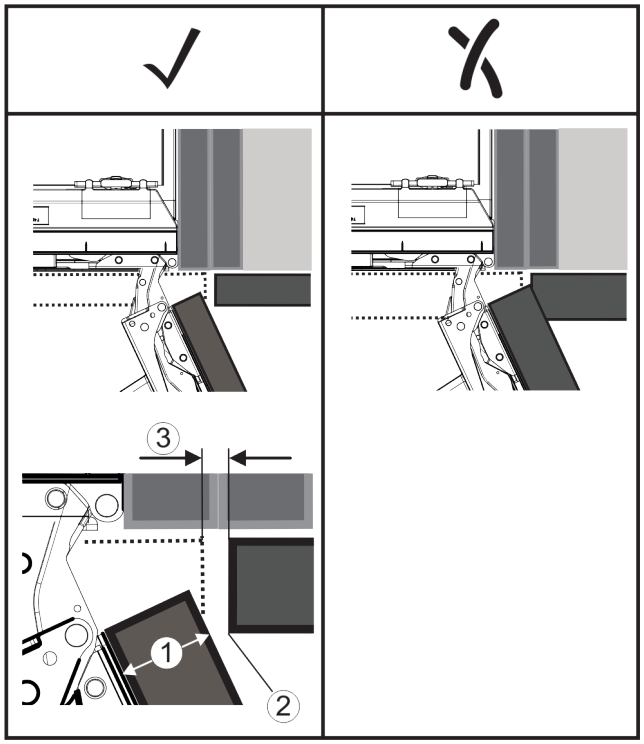

Fig. 73

(1) Front thickness (FD)
(2) Edge radius (R)
(3) Clearance size (S)

	R (2) = 0 mm		R = 1,2 mm		R = 2 mm		R = 3 mm	
FD(1) (mm)	Gmin	Gmax	Gmin	Gmax	Gmin	Gmax	Gmin	Gmax
16	0,3	0,9	0,1	0,4	0,1	0,2	0,1	0,2
19	0,7	2,4	0,3	1,9	0,23	3,25	0,1	0,8
20	2	4,3	1,5	3,6	1	3,1	0,6	2,7
22	3,5	6,3	3	5,6	2,6	5,3	2,1	4,6
24	5,5	8,3	5	7,8	4,5	7,4	4	6,9
26	7,6	10,7	7	10,3	6,6	9,9	6,2	9,4

Fig. 74 Table of clearance limits

G_{min} = min. clearance in mm

G_{max} = max. clearance in mm

Note
When making adjustments, always make sure that the cabinet front suits the general appearance.

Check the collision factors and adjust them accordingly:

▶ Determine the front thickness and edge radius.
▶ Refer to the table for the min./max. clearance dimensions.
▶ Check the clearance size against the table.
▶ Do one of the following depending on the measured clearance size.

Clearance size	Description
$S > G_{max}$	If the clearance size is greater than the two limits, you do not need to make any adjustments.
$S < G_{min}$	If the clearance size is below the limits, you must increase it. Another option is to increase the edge radius.
$G_{min} \leq S \leq G_{max}$	If the clearance is between the two limits, you have to be careful. This will quickly lead to collisions.

18 Water tank*

Depending on your model, the InfinitySpring water tank is behind the lowest drawer in the fridge or BioFresh compartment

18.1 Inserting the water tank

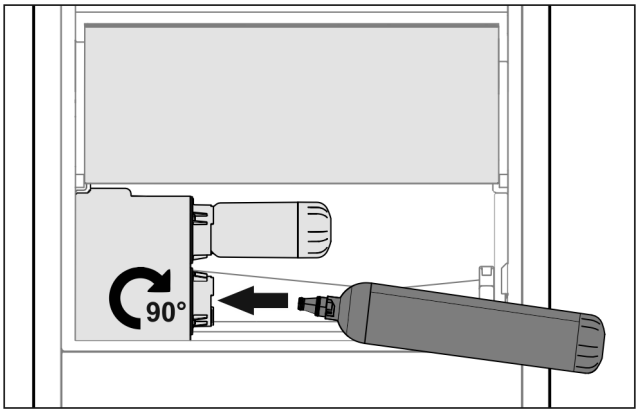

Fig. 75

▶ Remove the drawer.
▶ Insert the water tank and turn approx. 90° to the right until it engages.
▶ Check that the water tank is sealed and no water leaks out.
▶ Insert the drawer.
▶ Vent the water system (see Installation Instructions, Water Connection)

Instead of the water filter, you can use an additional water tank.

Note
The water tank is available as a spare part.

19 Water filter*

Depending on your model, the water filter is behind the lowest drawer in the fridge or BioFresh compartment.

It absorbs deposits in the water and reduces the taste of chlorine.

❑ Replace the water filter at least every 6 months under the specified usage conditions or if the flow rate drops significantly.
❑ The water filter contains carbon and can be disposed of with the regular household waste.

Note
The water filter can be purchased from the Liebherr-Hausgeräte store at home.liebherr.com/shop/de/deu/zubehor.html.

19.1 Installing the water filter

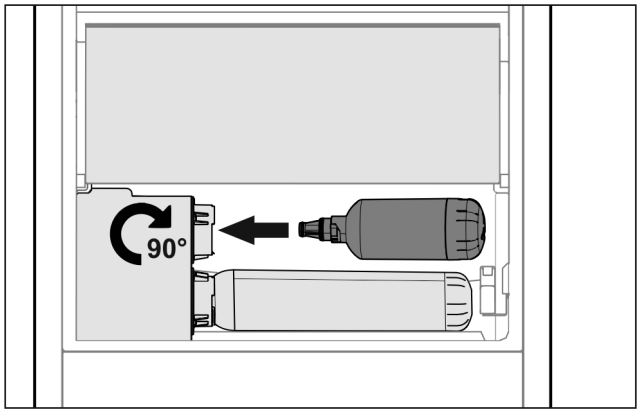

Fig. 76

▶ Remove the drawer.
▶ Insert the water filter and turn clockwise approx. 90° until it engages.
▶ Make sure the filter does not leak and no water is coming out.
▶ Insert the drawer.

CAUTION
New water filters may contain particulate matter.
▶ Draw 3 l of water from the InfinitySpring and dispose of it.

▷ The water filter is now ready for use.

20 Connecting the appliance

WARNING
Danger of fire due to incorrect connection!
Burns.
Damage to the appliance.
▶ Do not use an extension cord.
▶ Do not use a multipoint connector strip.

NOTICE
Danger of damage to incorrect connection!
Damage to the appliance.
▶ Do not connect the appliance to a stand-alone inverter, e.g. solar power systems and petrol generators.

Note
Only use the mains cable supplied.
▶ A longer mains cable can be ordered from Customer Service.

Make sure that the following requirements are fulfilled:

- The type of current and voltage at the installation site complies with the information on the serial tag .
- The socket is grounded and fused in accordance with regulations.
- The tripping current for the fuse is between 10 and 16 A.
- The socket is easily accessible.

▶ Check the electrical connection.
▶ Connect the mains plug to the power supply.
▷ The Liebherr logo appears on the screen.
▷ The display switches to the standby symbol.



home.liebherr.com/fridge-manuals

EN Refrigerators and freezers for integrated use, door-on-door

Issue date: 20240612

Part number index: 7088422-00

Liebherr-Hausgeräte GmbH
Memminger Straße 77-79
88416 Ochsenhausen
Deutschland



Installation Guide

Quality, Design and Innovation



home.liebherr.com/fridge-manuals

LIEBHERR

Contents

1 General safety instructions..... 2

2 Setup conditions..... 3
2.1 Space..... 3
2.2 Setting up multiple appliances..... 3
2.3 Electrical connection..... 4

3 Appliance dimensions..... 4

4 Recess dimensions..... 4
4.1 Internal dimensions..... 4

5 Ventilation requirements..... 5

6 Custom panel weights..... 5

7 Water connection*..... 5
7.1 Dimensions for the water connection..... 5
7.2 Water pressure..... 5

8 Transporting the appliance..... 5

9 Unpacking the appliance..... 5

10 Setting up the appliance..... 6
10.1 After setup..... 6

11 Disposal of packaging..... 6

12 Explanatory symbols used..... 6

13 ** freezer compartment door*..... 7**
13.1 Moving the door hinge..... 7

14 Reversing the door..... 7

15 Connecting the appliance to the water supply*.. 7
15.1 Connecting the hose..... 8
15.2 Check the water system..... 8

16 Installing the appliance in the recess..... 8
16.1 Preparing the recess and the appliance..... 10
16.2 Aligning the appliance in the recess..... 11
16.3 Temporarily fastening the knocking sensor..... 13
16.4 Inserting the covers and height adjuster..... 14
16.5 Mounting the front of the cabinet..... 14
16.6 Fastening the knocking sensor..... 16
16.7 Installing covers and welting..... 17
16.8 Setting the sensitivity of the knocking sensor..... 17
16.9 Checking the installation..... 18

17 Cabinet fronts..... 18
17.1 Dimensions..... 18
17.2 Mounting the cabinet front(s)..... 19
17.3 Setting the clearance to avoid collision..... 19

18 Water tank*..... 19
18.1 Inserting the water tank..... 19

19 Water filter*..... 20
19.1 Installing the water filter..... 20

20 Connecting the appliance..... 20

The manufacturer is constantly working to improve all types and models. Therefore, please be aware that we reserve the right to make changes to the shape, equipment and technology.

Symbol	Explanation
	**Read instructions** Please read the information in these instructions carefully to understand all of the benefits of your new appliance.

Symbol	Explanation
	**Additional information online** The digital manual with supplemental information and in additional languages can be found online by scanning the QR code on the front page of this manual or by entering the service number at **home.liebherr.com/fridge-manuals**. The service number can be found on the serial tag: 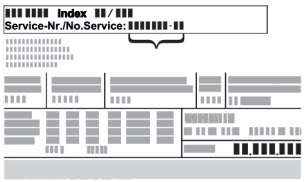 *Fig.* Example illustration
	**Check appliance** Check all parts for transport damage. If you have any complaints, please contact your agent or customer service.
	**Differences** These instructions apply to a range of models, so there may be differences. Sections that apply to certain models only are indicated by an asterisk (*).
	**Instructions and results** Instructions are marked with a ▶. Results are marked with a ▷.
	**Videos** Videos about the appliances are available on the YouTube channel of Liebherr-Hausgeräte.

1 General safety instructions

- Please keep this assembly manual in a safe place so you can refer back to it at any time.
- If you pass the appliance on, please hand this assembly manual to the new owner.
- Read this assembly manual before installation and use in order to use the appliance safely and correctly. Follow the instructions, safety instructions and warning messages included at all times. They are important for ensuring you can operate and install the appliance safely and without any problems.
- First read the general safety instructions in the “General safety instructions” section of the **operating instructions**, which accompany these installation instructions, and follow them. If you cannot find the **operating instructions**, you can download the **operating instructions** from the internet by entering the service number at **home.liebherr.com/fridge-manuals**. The

service number can be found on the serial tag:

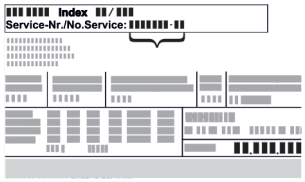

- **Observe the warning messages and other detailed information in the other sections when installing the appliance:**

⚠	DANGER	indicates a hazardous situation, which if not avoided, will result in death or serious injury.
⚠	WARNING	indicates a hazardous situation, which if not avoided, could result in death or serious injury.
⚠	CAUTION	indicates a hazardous situation, which if not avoided, will result in minor or moderate injury.
	NOTICE	indicates a hazardous situation, which if not avoided, could result in damage to property.
	Note	indicates useful advice and tips.

2 Setup conditions

⚠ **WARNING**
Risk of fire due to moisture!
If live parts or the power cord get wet, this can cause a short circuit.
▶ The appliance is designed for use in enclosed spaces. Do not operate the appliance in open space or in damp areas or where there is spray.

Normal use
- Only set up and use the appliance in enclosed spaces.
- Only use once installed.

2.1 Space

⚠ **WARNING**
Leaking refrigerant and oil!
Fire. The refrigerant contained within the appliance is environmentally friendly, but flammable. The oil contained within the appliance is flammable. Escaping refrigerant and oil can ignite if they are of high enough concentration and are exposed to an external heat source.
▶ Do not damage the pipelines of the coolant circuit and the compressor.

- If the appliance is installed in a very damp environment condensate water may form on the outside of the appliance.
  Always ensure sufficient airflow and ventilation in the setup location.
- The more refrigerant there is in the appliance, the larger the space that it is installed in must be. If the space is too small, any leak may create a flammable mixture of gas and air. For every 8 g of refrigerant, the installation space must be at least 1 m^3 . Specifications on the refrigerant in the appliance can be found on the serial tag plate inside the appliance.

2.1.1 Installation surface

- The floor of the installation site must be horizontal and level.
- If you are installing the unit in a cabinet standing on an uneven floor: level the cabinet.

2.1.2 Installation position

- Do no install the appliance in an area with direct sunlight, next to a heating unit or similar.
- You can install the appliance directly next to an oven.
- If you install the appliance directly next to an oven, its energy consumption may increase slightly. This depends on the service life and how often the oven is used.
- Only install the appliance in solid cabinets.

Note
A set for restricting the door opening angle to 90° can be acquired from Customer Services for appliances with soft closing.

2.2 Setting up multiple appliances

The appliances were developed for different installation options. If you want to install several appliances side by side or on top of each other, make sure that the following requirements are met:
❑ Only install those appliances side by side or on top of each other that were developed for the purpose.
❑ Observe the instructions and the following table.

NOTICE
Risk of damage caused by water condensate!
▶ Do no set up the appliance next to another refrigeration/freezer unit.

NOTICE
Risk of damage from condensation!
▶ Do no set up the appliance directly above another refrigeration/freezer unit.

Model	Installation type
All models	individually
Models with a model designation that starts with **S...**.	Side-by-Side (SBS)
Models up to a maximum recess height of 880 mm and with heated ceiling can be “set up” on top of each other. Top appliance up to a maximum recess height of 140 mm	On top of each other

Models and their installation type

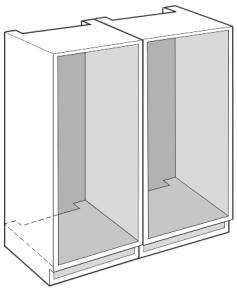

Fig. 1

Install each appliance in a separate cabinet recess.

2.3 Electrical connection

WARNING
Danger of fire due to incorrect positioning!
If the power supply cable or plug touches the back of the appliance, the vibration can damage the power supply cable or the plug resulting in a short circuit.

- ▶ Make sure the power supply cable is not trapped under the appliance when you position the appliance.
- ▶ Install the appliance so that it does not touch any plugs or power cables.
- ▶ Do not connect any appliances to sockets in the area of the back of the appliance.
- ▶ Do **not** place and operate power strips/power distributors and other electronic devices (such as halogen transformers) at the back of the appliances.

3 Appliance dimensions

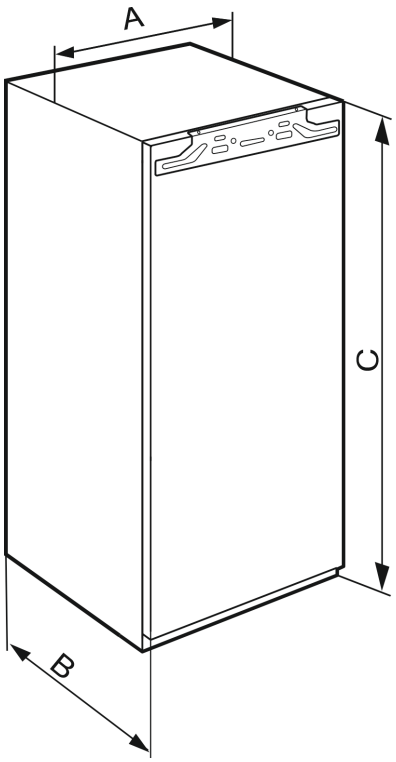

Fig. 2

IRBA.. 41..	
A (mm)	559
B (mm)	546
C (mm)	1213

IRBA.. 51.. / SIFNA.. 51..	
A (mm)	559
B (mm)	546
C (mm)	1770

4 Recess dimensions

4.1 Internal dimensions

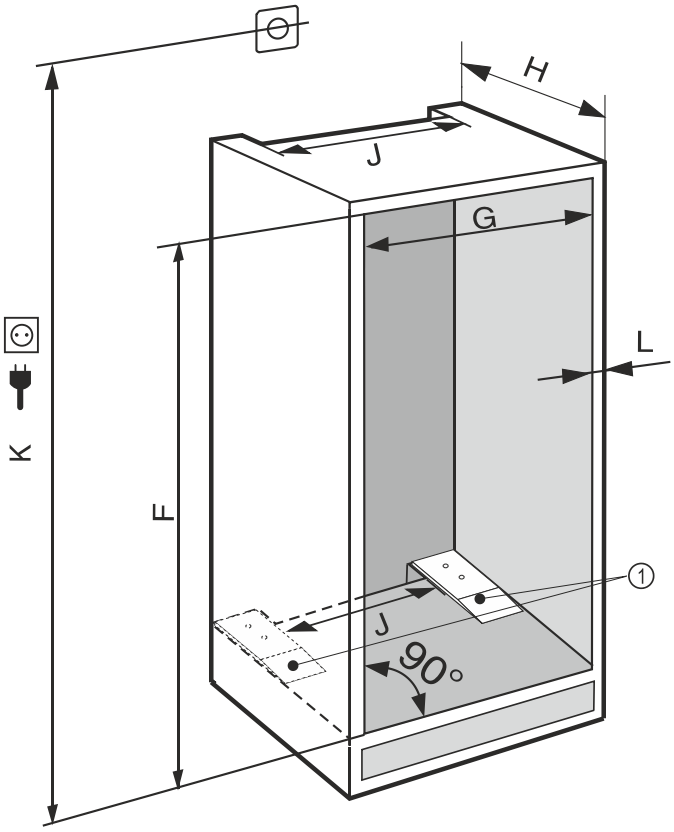

Fig. 3

(K) max. 2100 mm

(1) Installing the spacer plates is relevant to functionality.

Observe the following information for appliances with a permanent water connection:*

- Water connection (see 7 Water connection*)
- Connect the appliance to the water supply (see 15 Connecting the appliance to the water supply*)

IRBA.. 41..	
F (mm)	1220 to 1236
G (mm)	560 to 570
H (mm)	min. 555, recommended 560
J (mm)	min. 500
L (mm)	max. 19

IRBA.. 51.. / SIFNA.. 51..	
F (mm)	1777 to 1793
G (mm)	560 to 570
H (mm)	min. 555, recommended 560
J (mm)	min. 500
L (mm)	max. 19

The specified energy consumption was determined with a kitchen unit depth of 560 mm . The appliance will work properly at a kitchen unit depth of 550 mm , but with a slightly higher energy consumption.

- ▶ Check the wall thickness of adjacent units: It must be a minimum of 16 mm .

*** Depending on model and options**

- ▶ Only fit the appliance into stable, solid kitchen units. Secure the unit against tipping.
- ▶ Align the cabinets with a level and a try square. If necessary, level them by putting something underneath them.
- ▶ Make sure floor and the side panels of the cabinet are at right angles to each other.

5 Ventilation requirements

NOTICE
Covered vents!
Damage. Appliance can overheat, which can reduce the service life of various parts of the appliance and lead to functional impairments.
- ▶ Always ensure good ventilation.
- ▶ Always keep vents or ventilation grills in the appliance housing and in the kitchen structure (built-in appliance) unobstructed.
- ▶ Never block air vents of the fan.

Comply with the ventilation gaps:
- The depth of the ventilation shaft at the back of the cabinet must be at least 38 mm.
- At least 200 cm^2 is required for the ventilation gap cross sections in the plinth and the housing cabinet.
- Basically, the larger the ventilation cross-section, the more efficiently the appliance will run.

Sufficient ventilation is required for the operation of the appliance. The ventilation grids provided ensure an effective ventilation cross-section on the appliance of 200 cm^2. If you replace the ventilation grids with a cover plate the ventilation cross-section must be as least as large as the ventilation grid provided by the manufacturer.

6 Custom panel weights

NOTICE
An excessively heavy custom panel can potentially cause damage!
If the custom panel is too heavy, damage to the hinges cannot be ruled out, which may compromise the functionality of the unit.
- ▶ Before installing the custom panel, ensure the custom panel does not exceed the permissible weight.

Recess height (mm)	Appliance type	Maximum weight of the custom panel (kg)
1220	IRBA.. 41..	19
1780	IRBA.. 51.. SIFNA.. 51..	26

Single-door fridges and freezers

7 Water connection*

If your appliance has a fixed water connection, a hose is supplied with it.

Note
You can purchase a hose of a different length as an accessory.

Overview of dimensions for the water connection:	(see 7.1 Dimensions for the water connection)
Requirements for the water pressure:	(see 7.2 Water pressure)
Make the water connection:	(see 15 Connecting the appliance to the water supply*)

7.1 Dimensions for the water connection

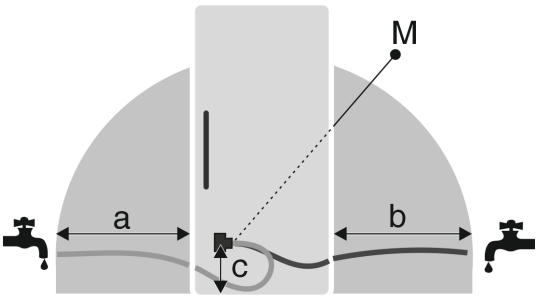

Fig. 4
(a) Maximum available hose length
(b) Maximum available hose length
(c) Distance of solenoid valve to floor
(M) Solenoid valve

a	b	c
~ 1200 mm	~ 1200 mm	~ 55 mm

7.2 Water pressure

The water connection line and solenoid valve of the appliance are suitable for a water pressure of up to 1 MPa (10 bar).

To ensure that the appliance functions correctly (flow rate, ice cube size, noise level), maintain the following water pressure:

Water pressure:	
bar	MPa
1.5 to 6.2	0.15 to 0.62

Water pressure if using the water filter:*	
bar*	MPa*
2.8 to 6.2	0.28 to 0.62

If the pressure is higher than 6.2 bar:
- ▶ Connect a pressure reducer.
- ▶ Make the water connection. (see 15 Connecting the appliance to the water supply*)

8 Transporting the appliance

Observe the following when transporting the appliance:
- ▶ Transport the appliance upright.
- ▶ Use two people when transporting the appliance.

During the first use:
- ▶ Transport the appliance packaged.

During appliance transport or at first use (e.g. when moving or cleaning):
- ▶ Empty the appliance.
- ▶ Secure the door against undesired opening.

9 Unpacking the appliance

If the appliance is damaged check with the supplier immediately before connecting it.

- ▶ Check the appliance and packaging for damage during transport. If you suspect any damage, please contact your supplier immediately.
- ▶ Remove all materials that could prevent it from being installed properly or prevent proper ventilation from the back or the side panels of the appliance.
- ▶ Remove all protective films from the appliance. Do not use sharp or pointed objects for this.

10 Setting up the appliance

CAUTION
Risk of injury due to heavy appliance!
▶ Have two people transport the appliance to its installation site.

WARNING
Danger of injury and damage due to the appliance being unstable!
The appliance can tip over.
▶ Secure the appliance as described in the instructions.

WARNING
Danger of fire and damage!
▶ Do not place devices that give off heat, e.g. microwaves, toasters, etc. on the appliance.

If possible, have a professional install the appliance in your kitchen cabinet unit.

Do not install the appliance without assistance.

10.1 After setup

▶ Remove all transport packaging.

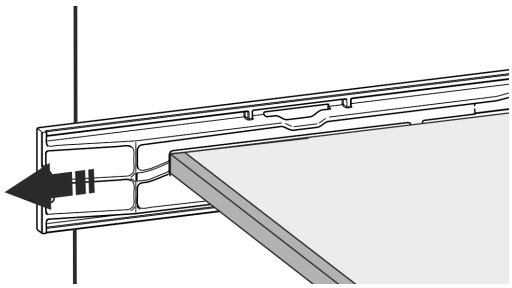

Fig. 5

▶ Pull off the transport lock on the appliance door.

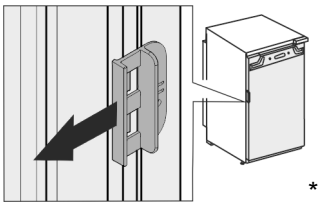

*

▶ Clean the appliance (see User Guide, Cleaning the appliance).

11 Disposal of packaging

WARNING
Danger of suffocation from packaging materials and films!
▶ Do not allow children to play with packaging materials.

The packaging is made from recyclable materials:
- Corrugated card/cardboard
- Parts made of foamed polystyrene
- Films and bags from polyethylene
- Packing bands from polypropylene
- Wood frame nailed together with a polyethylene window*

▶ Take the packaging material to an official collection point.

12 Explanatory symbols used

	There is the risk of injury when doing this! Obey the safety instructions!
	These instructions apply to several models. Only perform this step if it applies to your appliance.
	To install, please follow the detailed description in the Guide.
	This section applies either to a single-door appliance or a double-door appliance.
	Choose one of the options: Appliance with right-hinged door or appliance with left-hinged door.
	Installation step necessary with IceMaker and/or InfinitySpring.
	Loosen or tighten screws slightly.
	Tighten the screws fully.
	Check to see if the next step applies for your model.
	Check the components are in correctly.
	Measure the specified measurement and adjust if necessary.
	Installation tool: Meter stick

* Depending on model and options

  	Tool for assembly: Cordless screwdriver and attachments We recommend a longer bit insert to reach the screws better.
	Tool for assembly: Spirit level
	Tool for assembly: Size 7 and size 10 spanner
	Two people are required for this step.
	This step takes place at the selected location of the appliance.
	Aid for assembly: String
	Aid for assembly: Square
	Aid for assembly: Screwdriver
	Aid for assembly: Scissors
	Aid for assembly: Non-permanent marker pen
	Accessory kit: Remove components
	Dispose of components that are no longer needed.

13 **** freezer compartment door*

It is very easy to reposition the hinge of the **** freezer compartment door if the main door hinge is swapped. If the main door of the appliance can be opened to more than 115° (1), you can open the freezer compartment without repositioning the hinge. If the opening angle (2) of the appliance door is less than this, the hinge must be repositioned.

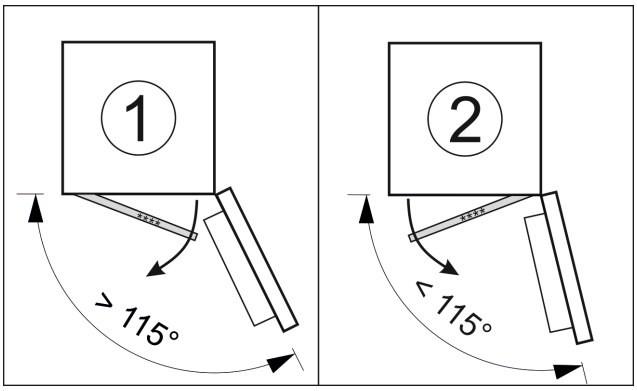

Fig. 6

13.1 Moving the door hinge

The slider for moving the door hinge is located on the back of the **** freezer compartment door at the bottom.

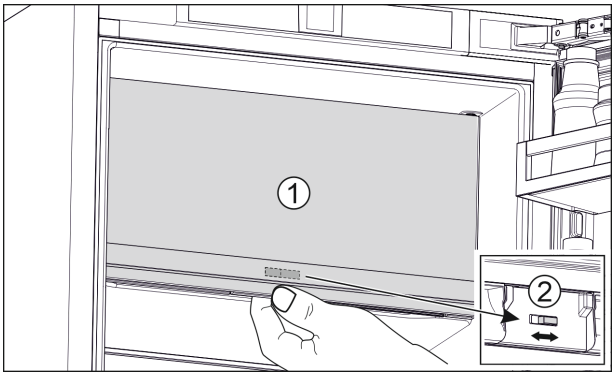

Fig. 7

▶ Close the **** freezer compartment door (1).
▶ Grab the **** freezer compartment door from below.
▶ Move the slider (2) either to the right or to the left.

14 Reversing the door

A separate accessory kit is available from customer service for reversing the door hinge.

Liebherr recommends:

▶ Have the door hinge reversed by a service technician.

15 Connecting the appliance to the water supply*

Make sure that the following requirements are fulfilled:

❑ The dimensions for the water supply connection are known and complied with. (see 7.1 Dimensions for the water connection)

❑ The correct water pressure is maintained. (see 7.1 Dimensions for the water connection)

- ❑ Water is supplied to the appliance via a cold water pipe that can withstand the operating pressure and is connected to the drinking water supply.
- ❑ All equipment and devices used for the water supply comply with the applicable regulations in the country of use.
- ❑ The back of the appliance is accessible so that you can connect the appliance to the drinking water supply.
- ❑ You are using the supplied hose. Old hoses have been disposed of.
- ❑ The hose connector contains a screen filter with a seal.
- ❑ There is a faucet between the hose line and the domestic water connection so that you can turn off the water supply if necessary.
- ❑ The faucet is not directly behind the appliance and is easily accessible. This way, you can push the appliance as far as possible into the cabinet recess and can quickly turn off the faucet if necessary.

WARNING
Risk of electric shock from water!
- ▶ Before connecting to the water hose: Disconnect the appliance from the mains.
- ▶ Before connecting to water lines: Shut off the water supply.
- ▶ Make sure that only qualified personnel connect the device to the drinking water supply.

WARNING
Risk of poisoning due to contaminated water!
- ▶ Connect to potable water supply only.

15.1 Connecting the hose

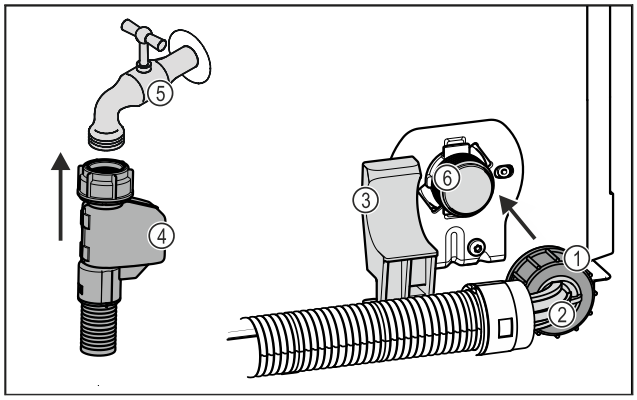

Fig. 8

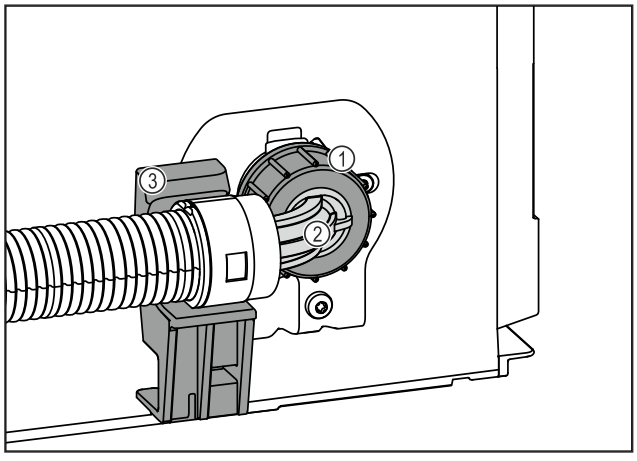

Fig. 8

(1) Nut
(2) Angled hose end
(3) Bracket
(4) Straight hose end
(5) Faucet
(6) Solenoid valve: The solenoid valve is at the bottom on the back of the appliance. It has an R3/4 connecting thread.

NOTICE
Risk of damage from incorrect installation!
- ▶ Do not damage or kink the hose.
- ▶ Do not damage or kink the hose during installation in the cabinet recess.

Connecting the hose to the appliance:
- ▶ Position and hold the angled hose end *Fig. 8 (2)* horizontally on the bracket *Fig. 8 (3)*.
- ▶ Screw on the nut *Fig. 8 (1)* on by hand until it is firmly in place.
- ▷ The hose is connected to the appliance.

Connecting the hose to the faucet:
- ▶ Connect the straight hose end *Fig. 8 (4)* to the faucet *Fig. 8 (5)*.
- ▷ The hose is connected to the faucet.

15.2 Check the water system

Before you completely install the appliance in the cabinet recess, Liebherr recommends checking the water system for leaks.
- ▶ Put in the InfinitySpring water tank. (see 18 Water tank*) *
- ▶ Put in the InfinitySpring water filter. (see 19 Water filter*) *
- ▶ Slowly turn on the faucet.
- ▶ Check the hose, water feed and connections for leaks.
- ▷ The water system has now been checked for leaks.
- ▷ The water system is not leaking: You can install the appliance completely in the cabinet recess.

Note
InfinitySpring: Before the first use, you must put the InfinitySpring into operation. To do this you must bleed and clean the water system. (see Quick Start Guide or operating instructions)*

IceMaker: Before the first use, you must clean the IceMaker. (see Quick Start Guide or operating instructions)*

16 Installing the appliance in the recess

The appliance is installed using the following main steps:
1. Have your tools ready. *Fig. 9 ()*
2. Check the assembly parts in the accessory kit. *Fig. 10 ()* to *Fig. 16 ()*
3. Prepare the recess and appliance.
4. Align the appliance in the recess.
5. Temporarily fasten the knocking sensor.
6. Put in the covers and height adjuster.
7. Mount the cabinet front.
8. Attach the knocking sensor.
9. Install the covers and welting.
10. Adjust the sensitivity of the knocking sensor.
11. Check the installation.

Tools

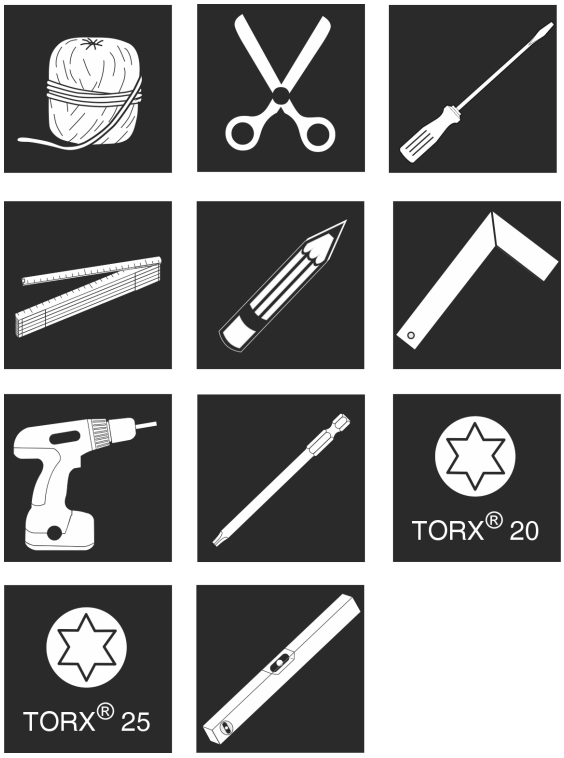

Fig. 9

Assembly parts in the accessory kit *Fig. 10 ()* to *Fig. 16 ()*

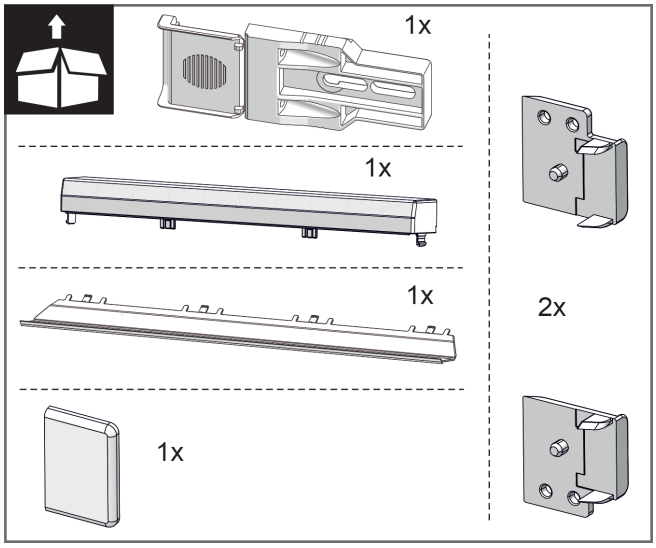

Fig. 10

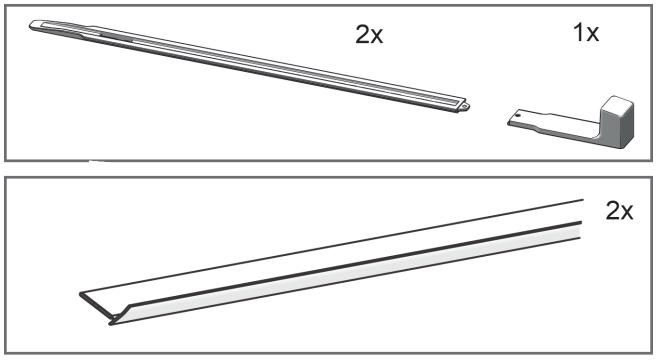

Fig. 11

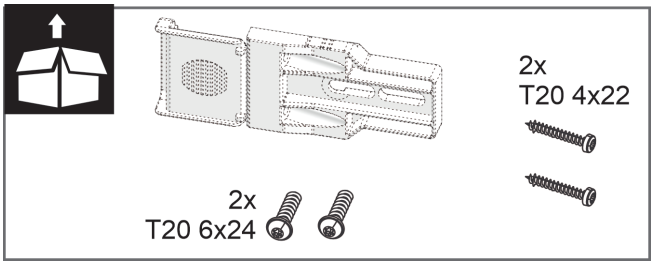

Fig. 12

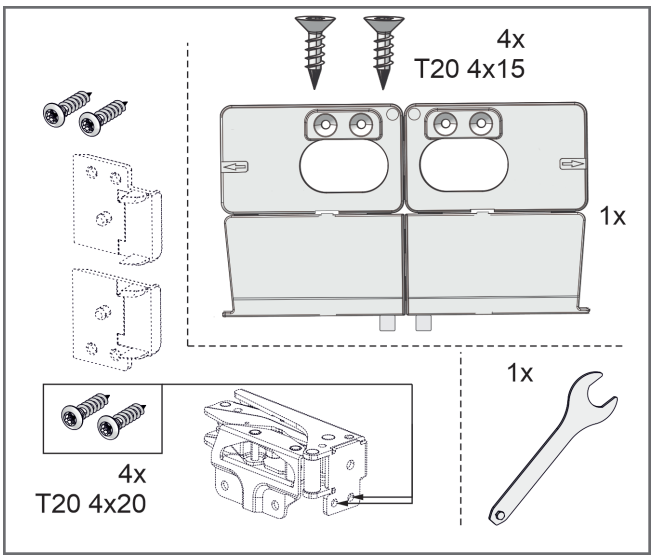

Fig. 13

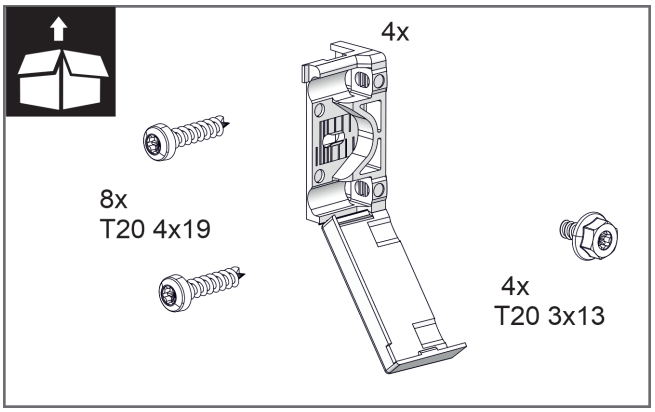

Fig. 14

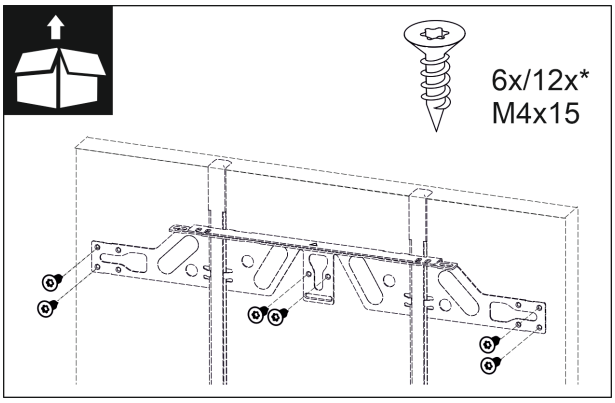

Fig. 15

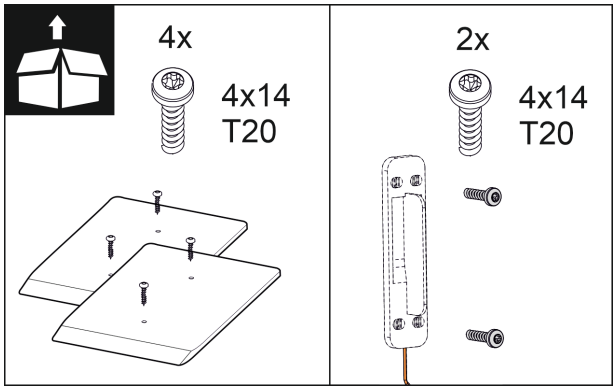

Fig. 16

16.1 Preparing the recess and the appliance

NOTICE
Risk of damage if the door scrapes on the floor!
Damage to the door's drive unit. If the spacer plates are not installed in the recess, the distance between the door and the floor is too low. The door may scrape on the floor and damage parts of the drive unit in the process.

▶ Install the spacer plates provided onto the floor of the recess.

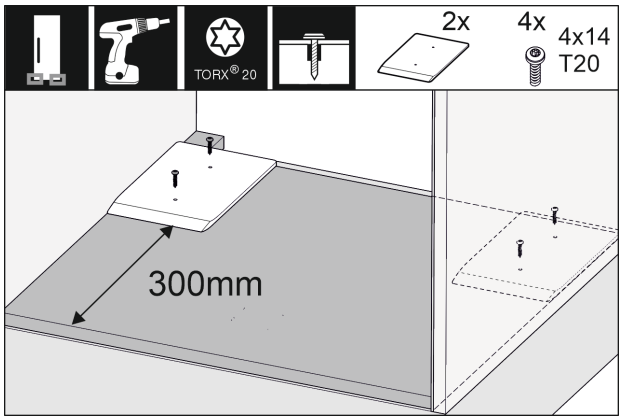

Fig. 17

▶ Fit the supplied spacer plates in the left and right of the cabinet recess.

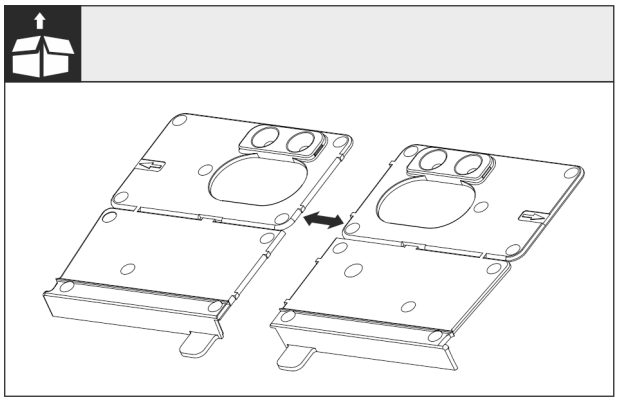

Fig. 18

▶ Separate the floor mounting bracket at the perforation.

NOTICE
Installation depth of the appliance.

▶ Using the mounting bracket ensures the correct installation depth of the appliance.

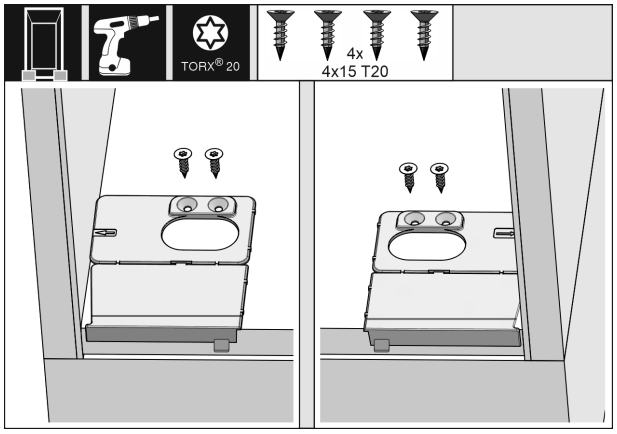

Fig. 19

▶ Screw the mounting brackets on the left and right of the recess floor, flush to the side wall.

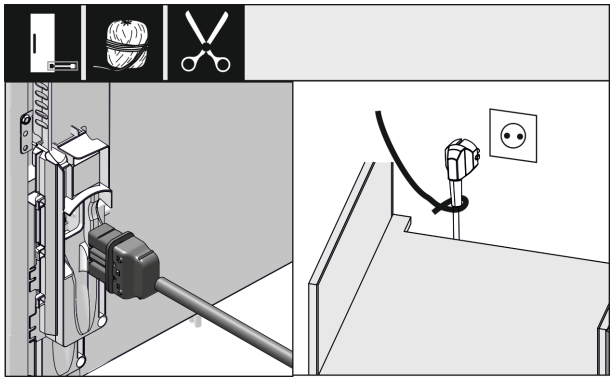

Fig. 20

▶ Remove the power cable from the enclosed package.
▶ Fully insert the IEC socket of the power cable completely into the appliance plug on the rear side of the appliance. Ensure the IEC socket is firmly in place.
▶ Use a string to route the power plug to a socket outlet that is freely accessible.

NOTICE
Risk of damage if the door opens automatically!
Damage to the door's drive unit. If the appliance has not yet been completely installed in the kitchen cabinet, but you have already connected it to the power supply, the door may open unexpectedly. If the distance between the door and the floor is too low, the door may scrape on the floor and damage parts of the drive unit in the process.

▶ Do not plug the power plug into the outlet until the appliance has been properly installed.

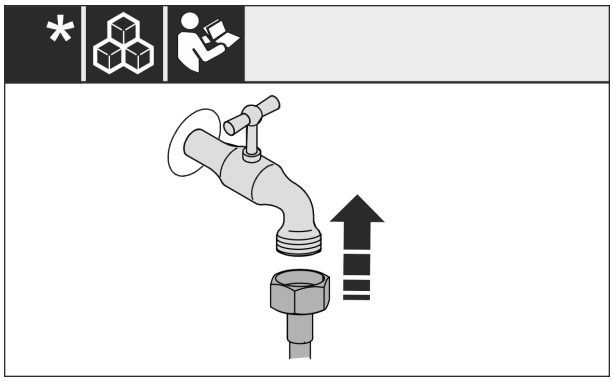

Fig. 21

▶ If necessary, install the water connection at this point according to the operating instructions.

*** Depending on model and options**

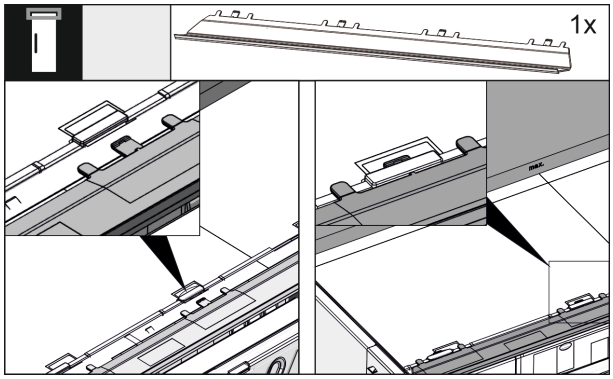

Fig. 22

▶ Insert the leveling panel on the top of the appliance. The panel can be moved to both sides.

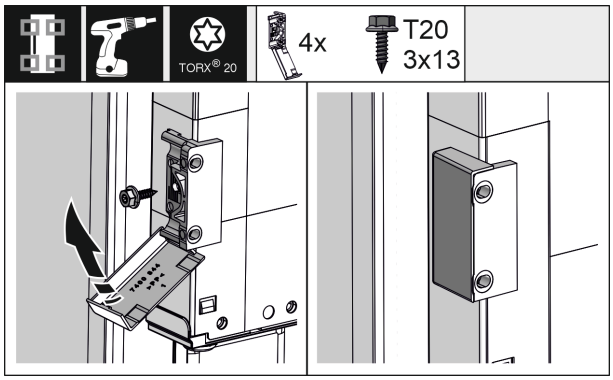

Fig. 23

▶ For easier assembly, fit the mounting bracket before pushing the appliance into the cabinet recess. For a large door, use four mounting brackets. After assembly, fold the covers onto the bracket.

16.2 Aligning the appliance in the recess

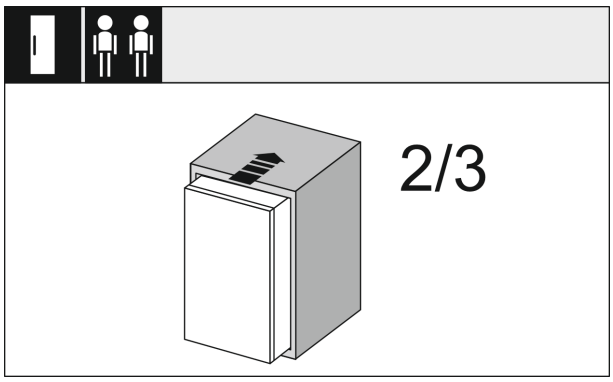

Fig. 24

▶ Push the appliance 2/3 of the way into the recess.

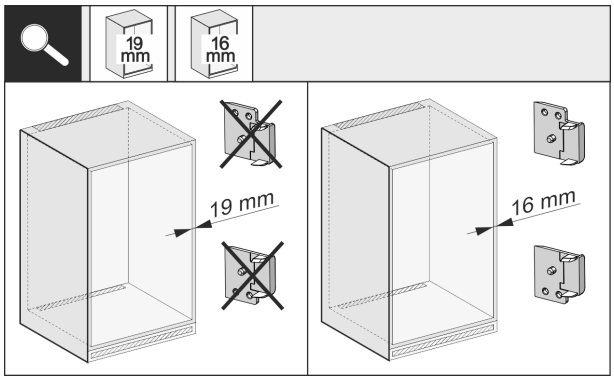

Fig. 25

▶ Check whether the unit side wall is 16 mm or 19 mm thick.

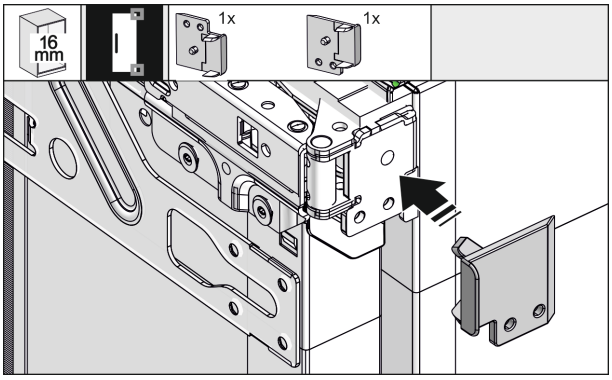

Fig. 26

▶ For unit walls which are 16 mm thick: Clip a spacer on all hinges. No spacer is required if the unit walls are 19 mm thick.

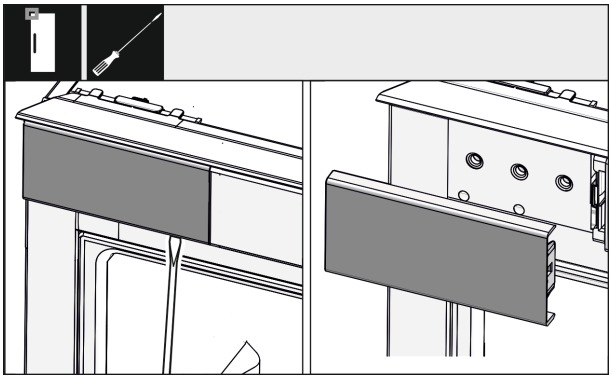

Fig. 27

▶ Use a screwdriver to loosen the cover at the top left and remove it.

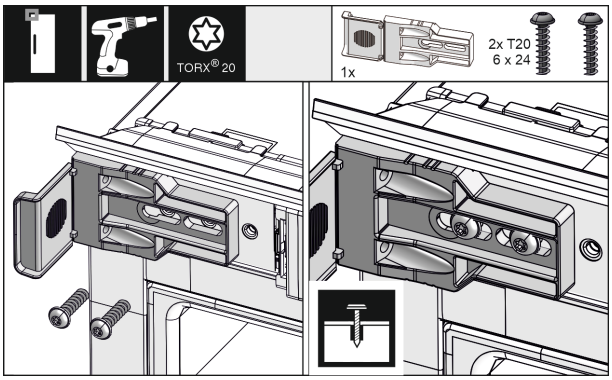

Fig. 28

▶ Loosely screw on the mounting bracket. The bracket should still be able to move slightly.

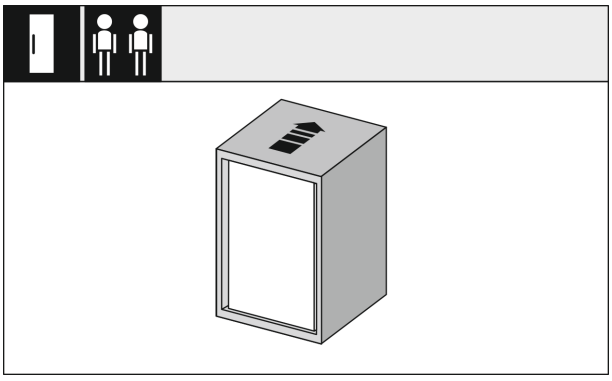

Fig. 29

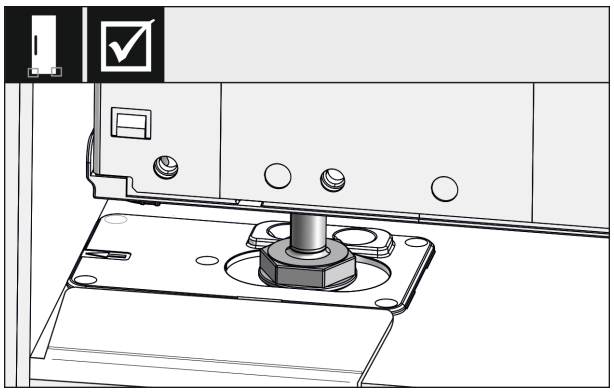

Fig. 30

WARNING

Risk of fire from short circuit!

- ▶ If you are pushing the appliance into the recess: Do not kink, trap, or damage the power cable.
- ▶ Do not operate the appliance with a defective power cable.

- ▶ Insert the appliance all the way into the unit recess. The adjustable feet must rest in the recesses in the brackets on both sides.

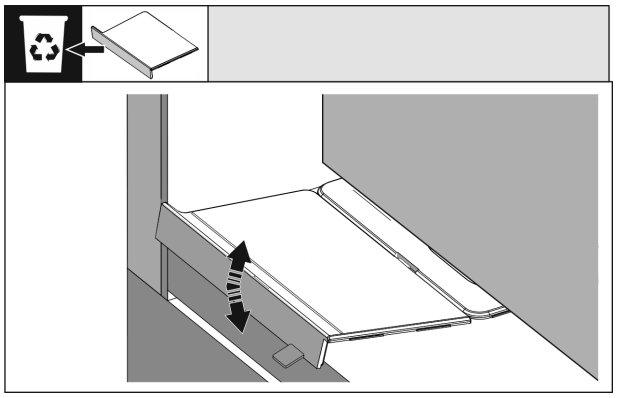

Fig. 31

- ▶ Remove the floor mounting bracket stopper. Loosen the stopper by moving it and, if necessary, pull it off using pliers.

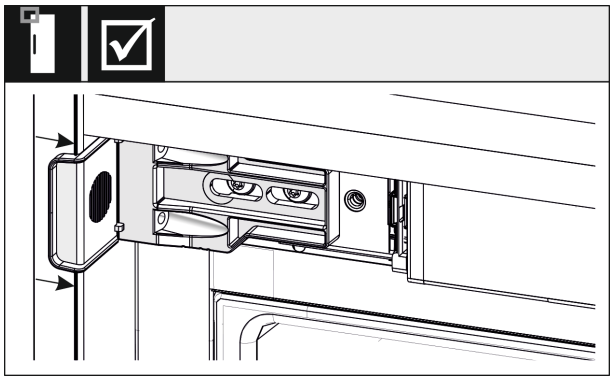

Fig. 32

- ▶ Check that the appliance is flush in the cabinet recess. The mounting bracket must be attached to the side wall of the cabinet recess.

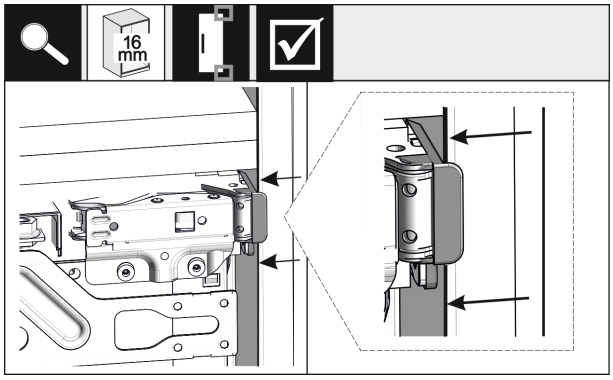

Fig. 33

- ▶ For unit side walls which are 16 mm thick, the spacers fit against the unit recess on the hinge side.

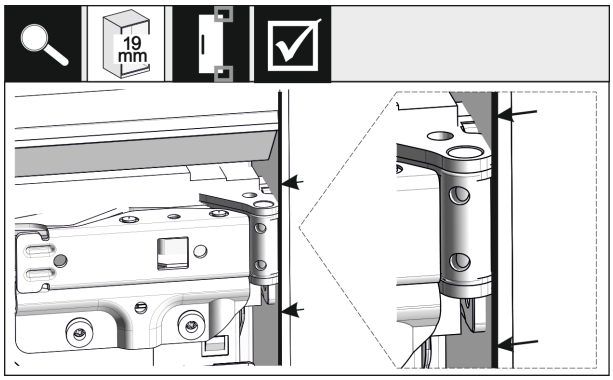

Fig. 34

- ▶ For unit side walls which are 19 mm thick, the front sides of the hinges are positioned flush against the front of the unit side wall.

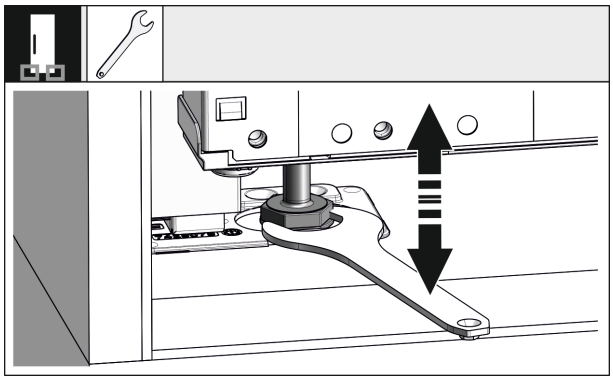

Fig. 35

- ▶ If necessary, use the adjustable feet to correct the tilt of the appliance.

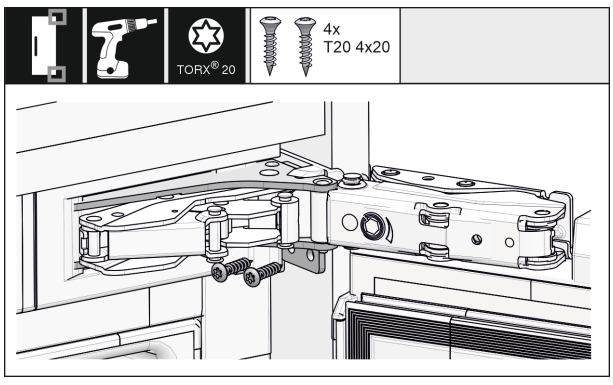

Fig. 36

- ▶ Screw on the appliance on the hinge side.

*** Depending on model and options**

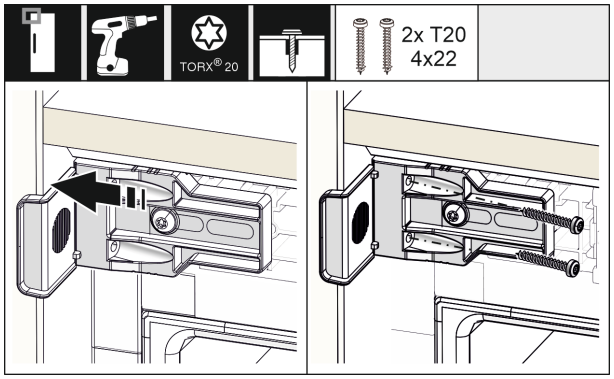

Fig. 37

▶ Move the bracket so it sits flush on the side wall of the cabinet recess. Tighten all the screws securely.

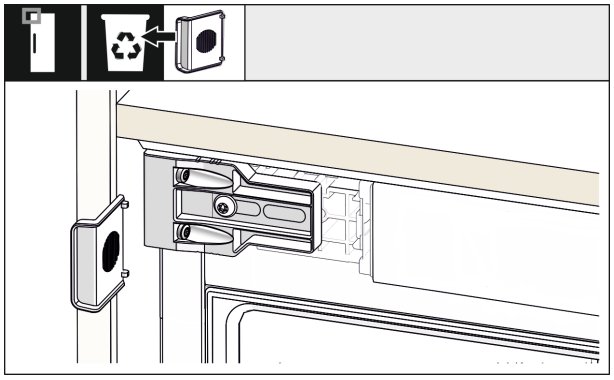

Fig. 38

▶ Break off the stop from the bracket on the handle side and dispose of it.

16.3 Temporarily fastening the knocking sensor

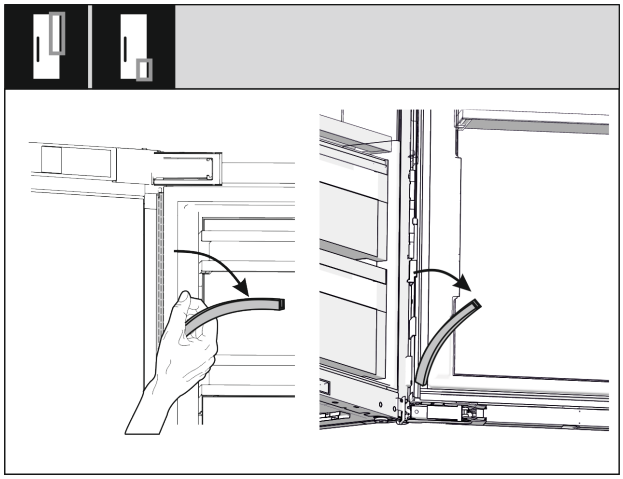

Fig. 39

▶ Pull of the top and bottom cover strip of the cable duct and put them aside. You need space behind the cover strips for installing the knocking sensor and the cabinet front.

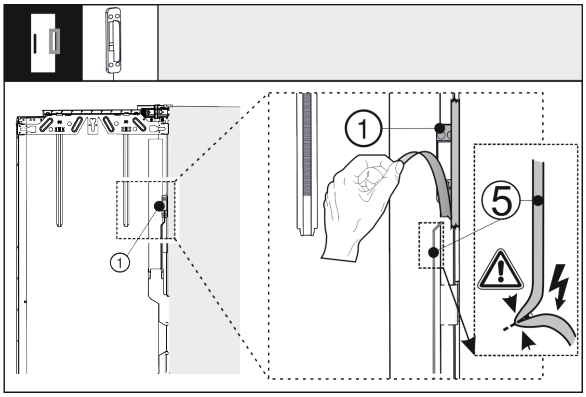

Fig. 40

▶ Loosen the knocking sensor *Fig. 40 (1)* from the outside door. Do not damage the connection cable *Fig. 40 (5)*.

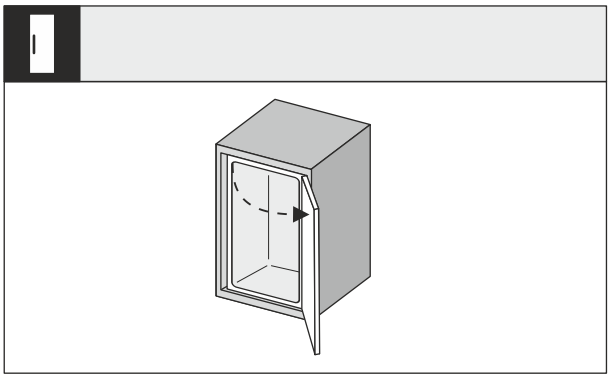

Fig. 41

▶ Open the appliance door wide.

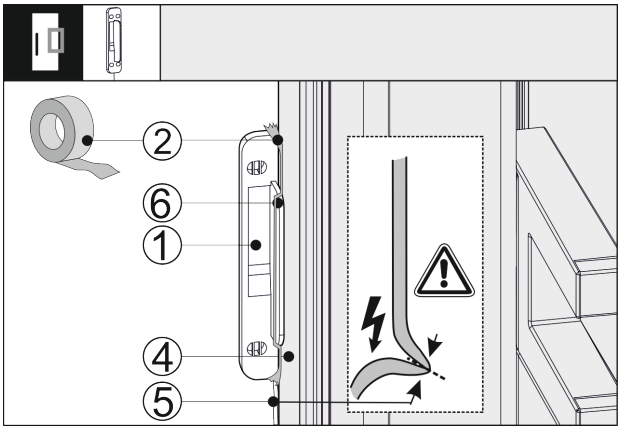

Fig. 42

▶ Place the knocking sensor *Fig. 42 (1)* on the side of the appliance door *Fig. 42 (4)* so that the stop *Fig. 42 (6)* touches the appliance door *Fig. 42 (4)*. The sensor cable *Fig. 42 (5)* is slightly tensioned and also touches the appliance door *Fig. 42 (4)*.

▶ Attach the knocking sensor *Fig. 42 (1)* with adhesive table *Fig. 42 (2)*. The knocking sensor is later screwed onto the cabinet front.

16.4 Inserting the covers and height adjuster

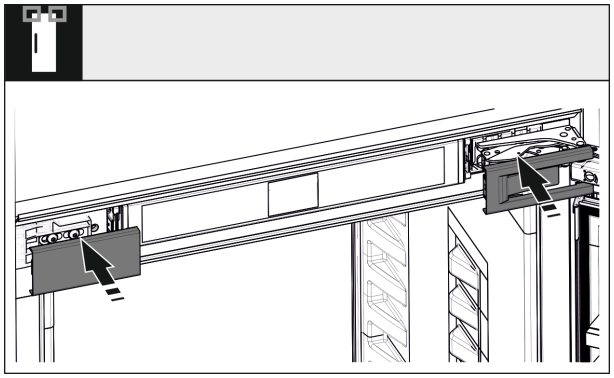

Fig. 43

▶ Put on the covers.

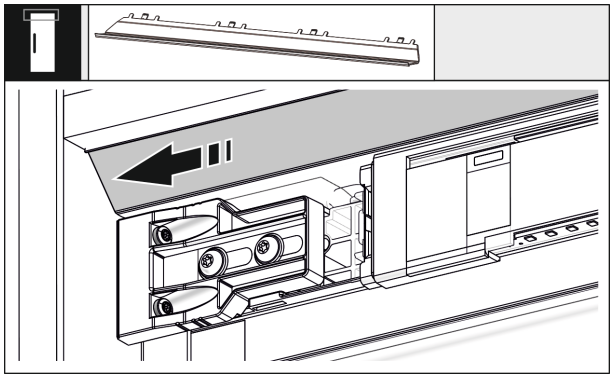

Fig. 44

▶ Slide the panel so that it sits flush with the side of the cabinet wall.

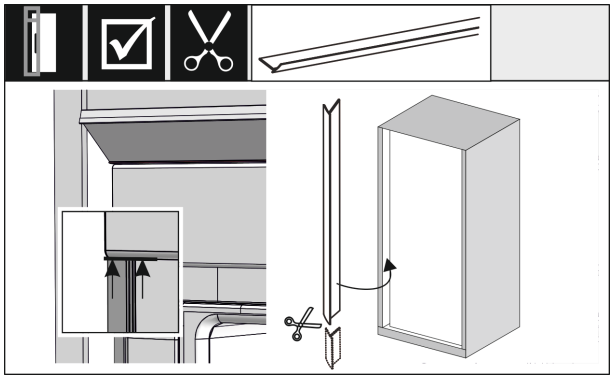

Fig. 45

▶ The sealing strip is magnetic. Position the sealing strip below the top cover and press it in. If necessary, shorten the sealing strip to the required length with a sharp pair of scissors.

Install leveling rails if the recess height is greater than 1400 mm:



Fig. 46

You must install leveling rails underneath the appliance for any recess height that is greater than 1400 mm. The leveling rails **minimize the sound level**. Two leveling rails and a mounting handle are included in the enclosed package as standard for recess heights above 1400 mm.

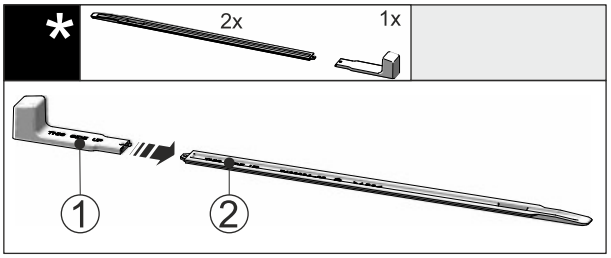

Fig. 47

▶ Insert the mounting handle *Fig. 47 (1)* into the leveling rail *Fig. 47 (2)*.

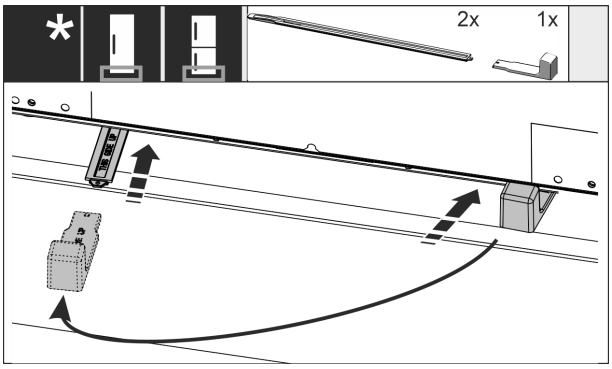

Fig. 48

▶ Insert the leveling rail into the guide underneath the appliance floor until it reaches the stop.

▶ Pull off the mounting handle and insert it into the second leveling rail.

▶ Proceed in the same manner with the second leveling rail.

16.5 Mounting the front of the cabinet

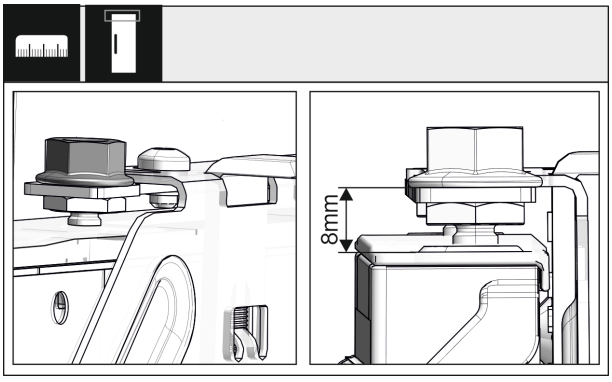

Fig. 49

*** Depending on model and options**

▶ Close the door and check the preset of 8 mm from the upper edge of the appliance door to the crosspiece support

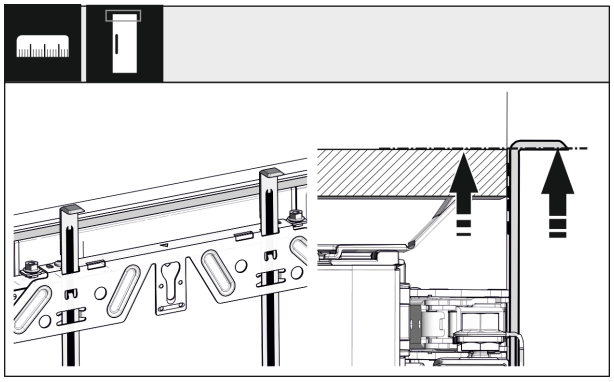

Fig. 50

▶ Push the fitting aids to the height of the custom door panel. The bottom of the fitting aid must be level with the top of the custom door panel to be mounted.

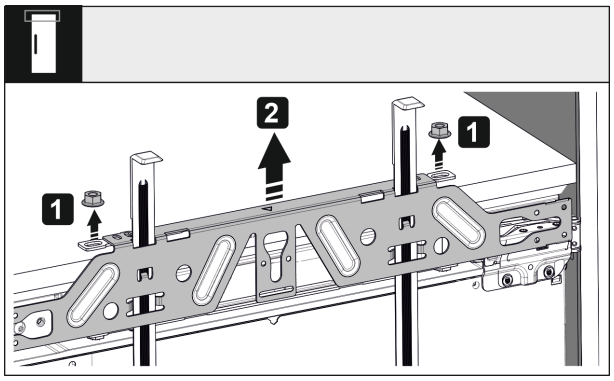

Fig. 51

▶ Loosen the counter nut and remove the crosspiece.

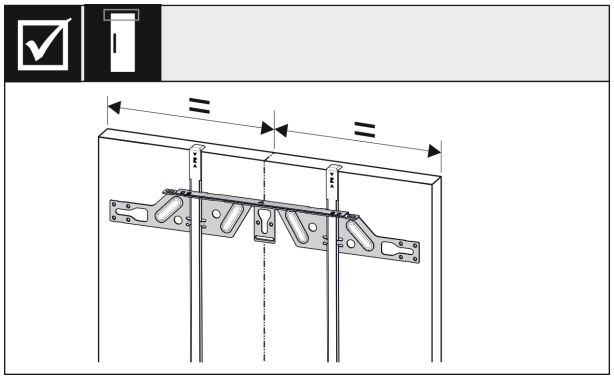

Fig. 52

▶ Hang the crosspiece on the inside of the custom door panel and make sure it is central.

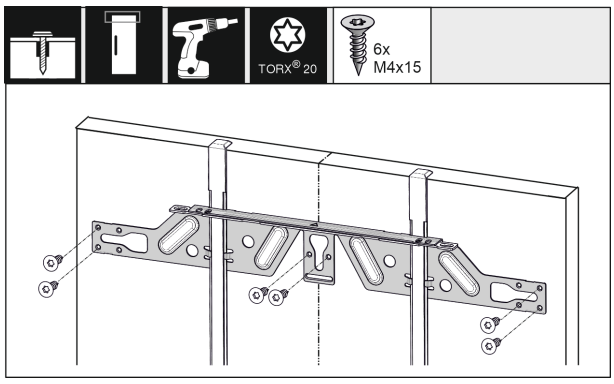

Fig. 53

▶ Fix the crosspiece using at least 6 screws for chipboard doors and at least 4 screws for panel doors.

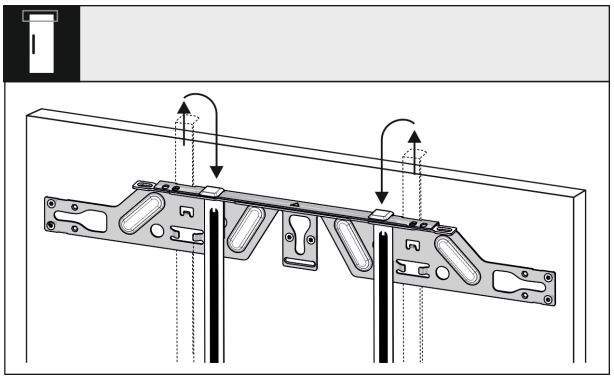

Fig. 54

▶ Pull out the fitting aids, turn them around and put them in the adjacent opening.

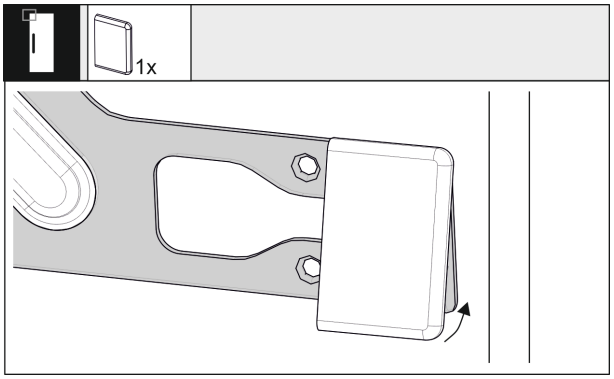

Fig. 55

▶ Clip the cover on the crosspiece on the handle side.

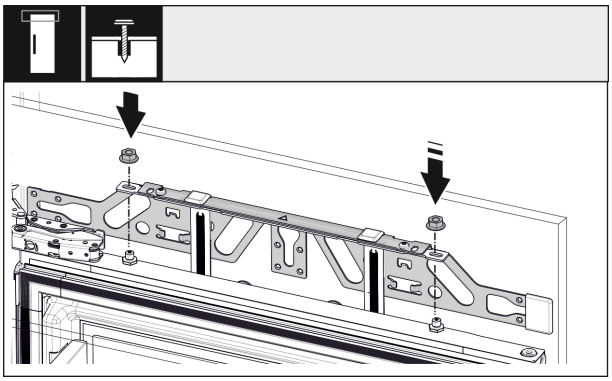

Fig. 56

▶ Attach the custom door panel and loosely screw the lock nuts onto the adjusting bolts.

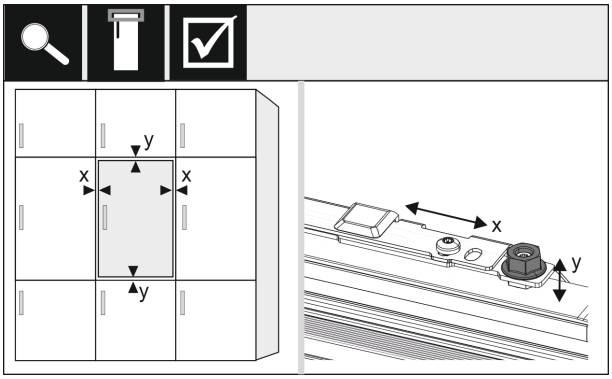

Fig. 57

▶ Align the custom door panel in the X and Y direction using the adjusting bolts.

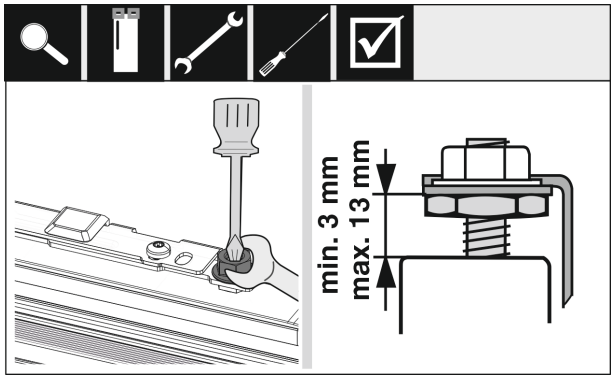

Fig. 58

▶ Screw on the lock nuts and check the height.

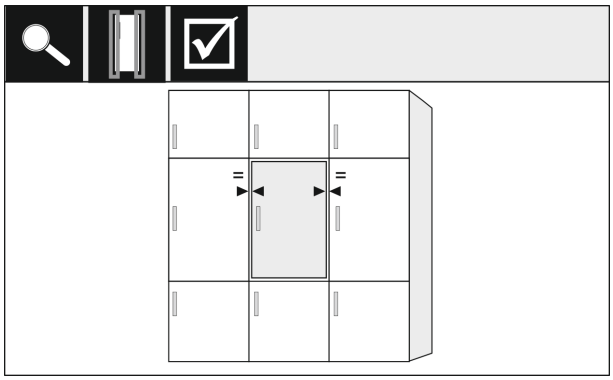

Fig. 59

▶ Check the gap between the door and the surrounding custom door panels. For unit fronts thicker than 19 mm, take account of the dimensions and advice in the **Unit fronts** section.

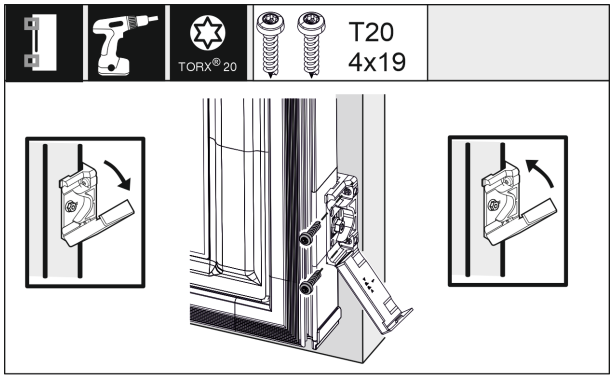

Fig. 60

▶ Open the cover to fit the mounting bracket on the custom door panel. Align the front edge of the mounting bracket parallel with the custom door panel edge and screw the bracket down tightly. Fold up the cover.

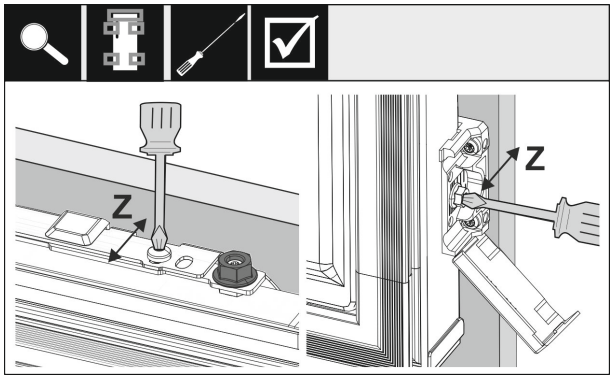

Fig. 61

Align the unit custom door panel the Z direction:

▶ Loosen the adjusting screw on the crosspiece and the screw on the mounting bracket.

▶ Move the door.

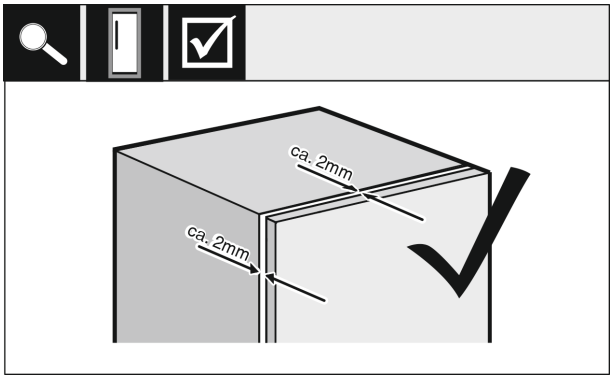

Fig. 62

▶ Check the gap between the custom door panel and the unit body.

▶ Check all screws and retighten them if necessary.

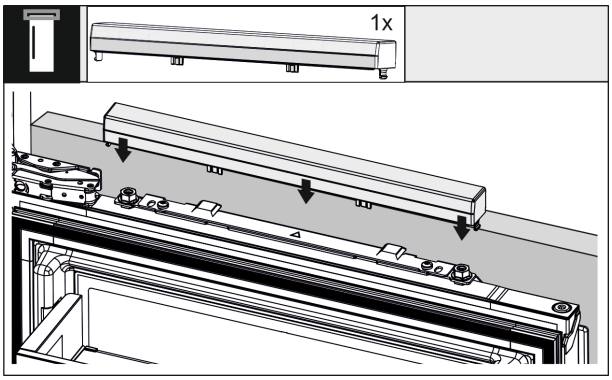

Fig. 63

▶ Clip the top cover on.

16.6 Fastening the knocking sensor

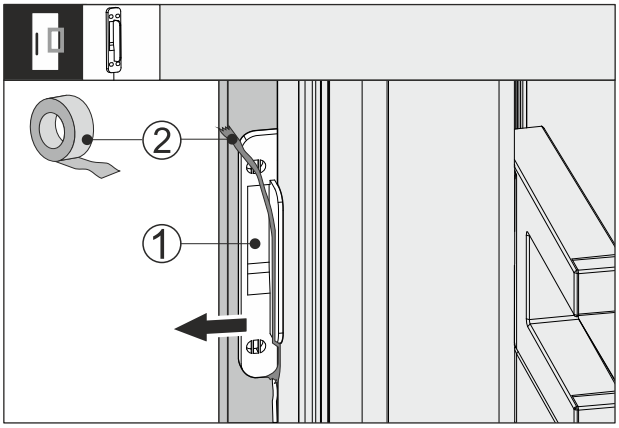

Fig. 64

▶ Remove the adhesive tape *Fig. 64 (2)* from the knocking sensor *Fig. 64 (1)*.

▶ Carefully remove the knocking sensor between the cabinet front and the appliance door.

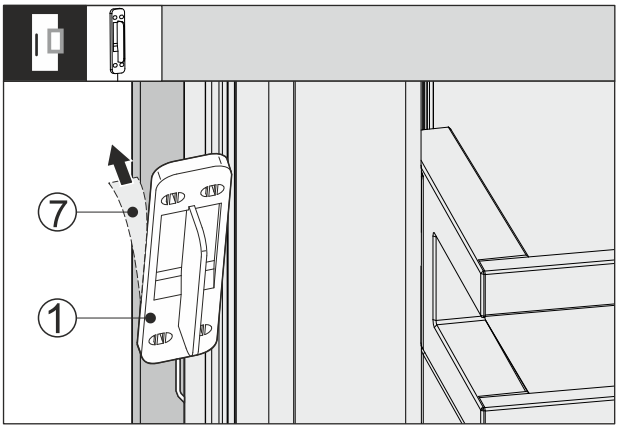

Fig. 65

▶ Pull off the protective film *Fig. 65 (7)* on the back of the knocking sensor *Fig. 65 (1)*.

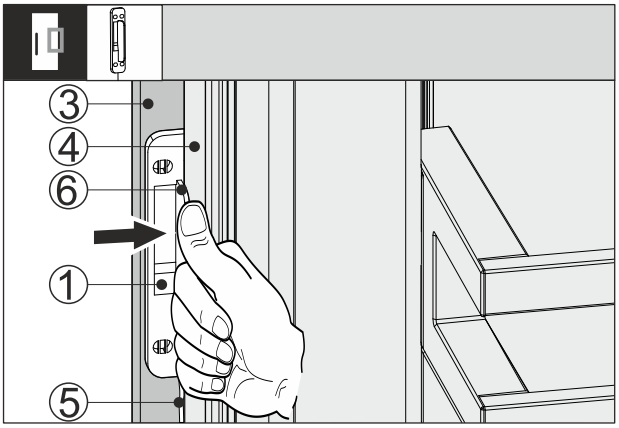

Fig. 66

▶ Push the knocking sensor *Fig. 66 (1)* between the cabinet front *Fig. 66 (3)* and appliance door *Fig. 66 (4)* so that the cable *Fig. 66 (5)* is slightly tensioned. The stop *Fig. 66 (6)* of the knocking sensor is touching the appliance door *Fig. 66 (4)*.

▶ Press the knocking sensor *Fig. 66 (1)* onto the cabinet front *Fig. 66 (3)*.

▷ Knocking sensor *Fig. 66 (1)* is glued on. Gluing the knocking sensor on optimizes the transmission of the knocking signal.

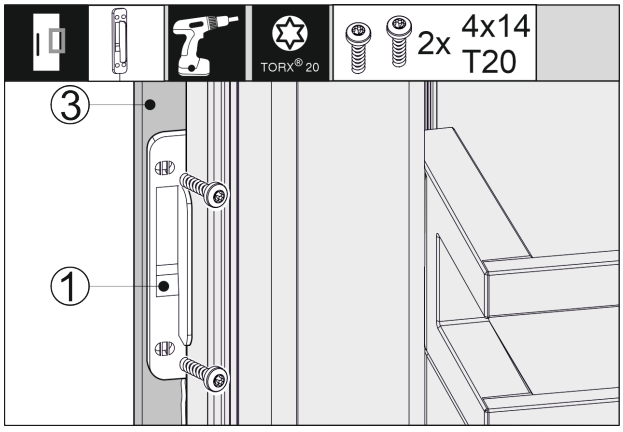

Fig. 67

A permanent attachment of the knocking sensor *Fig. 66 (1)* increases the service life.

▶ Screw the knocking sensor *Fig. 66 (1)* onto the cabinet front using the supplied screws *Fig. 66 (3)*.

▷ Knocking sensor is screwed on.

16.7 Installing covers and welting

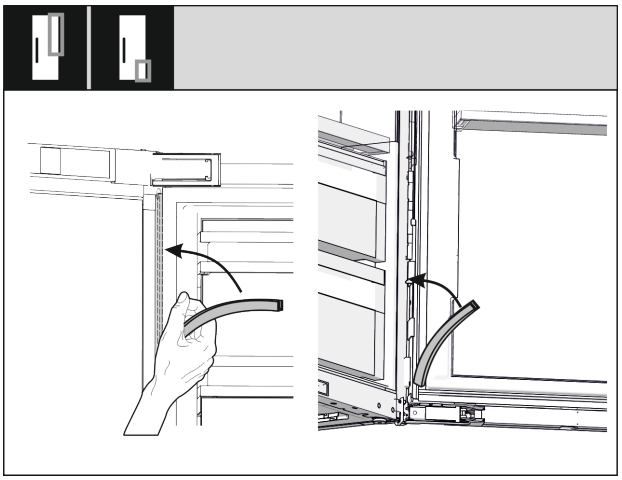

Fig. 68

▶ Position the long cover on the hinge side and press it on.

▶ Position the short cover on the hinge side and press it on.

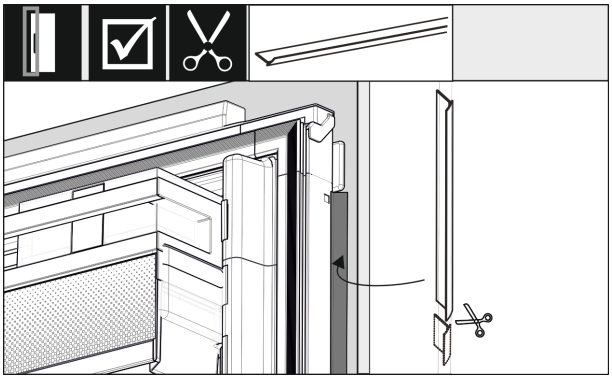

Fig. 69

▶ Adjust the length of the welting, cut it and insert it between the door of the cabinet front and the appliance door.

16.8 Setting the sensitivity of the knocking sensor

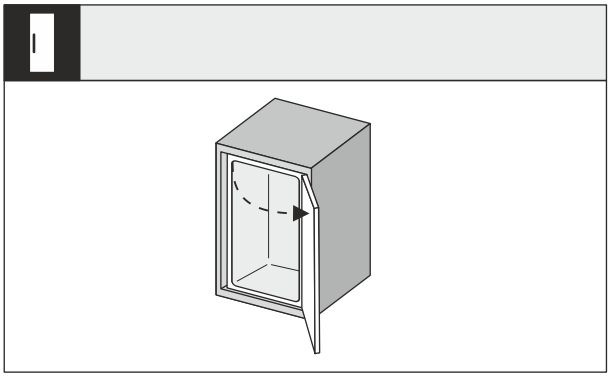

Fig. 70

▶ Open the appliance door wide.

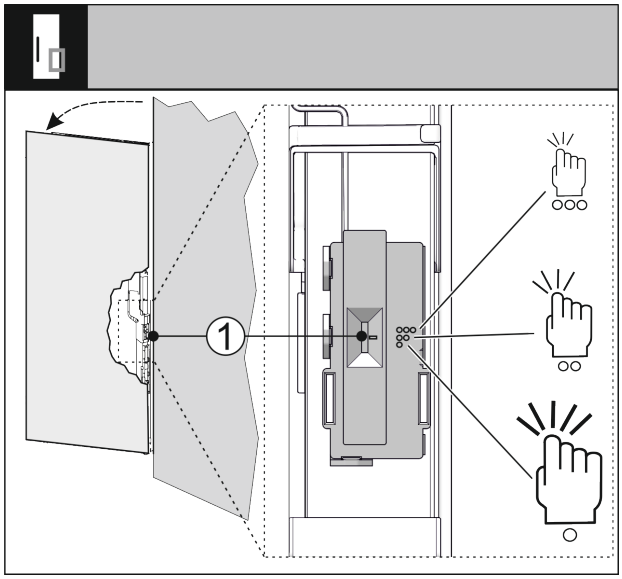

Fig. 71

You can adjust the sensitivity of the knocking sensor with a switch *Fig. 71 (1)*. The switch is on the hinge side on the lower third of the door.

Switch position	Symbol	Meaning
High	◯◯◯	Highly sensitive, slight knocking is sufficient.
Medium	◯◯	Medium sensitivity, less knocking is required. This is the default setting.
Low	◯	Less sensitive, strong knocking is required.

▶ Slide the switch *Fig. 71 (1)* to the desired switch position.

16.9 Checking the installation

▶ Check the following points to make sure that the appliance is properly installed. Otherwise, there might be ice buildup and/or condensation that could cause malfunctions.
▷ The door must close properly.
▷ The custom door panel must not touch the body of the unit.
▷ The seal on the upper corner on the handle side must be fitted securely.
▷ The spacer plates are screwed into the recess.

17 Cabinet fronts

17.1 Dimensions

Depending on your model, you will need one or two cabinet doors. The size of the cabinet door(s) depends on the overall recess size and cabinet unit thickness.

Note
Observe the corresponding appliance and niche dimensions as well as the installation sketches .

General requirements:

- Please note our recommendations for the specific appliance relating to size and weight for fixed door installation (see 6 Custom panel weights) .
- The body of the unit should be at least 16 mm thick but not more than 19 mm.
- When mounting a 2-door cabinet door, observe the recommended clearance.

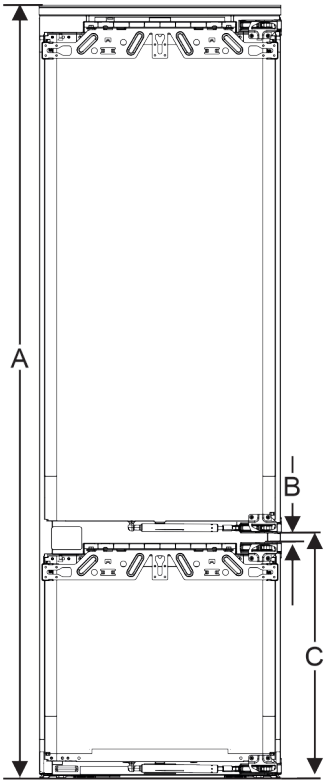

Fig. 72 Clearances for a 2-door cabinet door

Recess height 178-2 drawers	
Appliance height (A) (mm)	1770
Distance (B) (mm)	15
Clearance (C) door-on-door (mm)	549 + 15

Recess height 178-3 drawers	
Appliance height (A) (mm)	1770
Distance (B) (mm)	15
Clearance (C) door-on-door (mm)	695 + 15

Other cabinet door above, below or next to it:

- The vertical gap between custom panels must be 4 mm.
- The horizontal gap between custom panels must be 4 mm. Check the risk of them clashing here. (see 17.3 Setting the clearance to avoid collision)

Weight and hinges:

- For heavy cabinet fronts, the hinge is subject to a heavy load. The hinge may be damaged. Here, observe the maximum weight specifications for your appliance in the cabinet front weights chapter (see 6 Custom panel weights) .

- If the cabinet front exceeds the maximum permitted weight, an appliance with door-tracking device can help by loading the weight over several concealed hinges on the cabinet.
- If you use long unit fronts that protrude far above the appliances, we recommend an additional door hinge (e.g. Kamat), which must have the same pivot point as the fixed door hinge used with your appliance. By using another hinge (Kamat), the weight is shared over several points. The use of a milled compensating fastening is recommended for high unit fronts to counteract warping (convex/concave).

17.2 Mounting the cabinet front(s)

When installing, note:

- Cabinet front must be installed symmetrically to the refrigerator door.
- Adjoining cabinet front is exactly level.
- Adjoining cabinet front has the same edge radius as the front of the appliance.
- Cabinet front is flat and tension-free.
- The front panel has a minimum depth setting of approx. 2 mm to the body.

▶ Install the appliance in the recess.
▶ Fasten the front panel to the appliance door.
▶ Check that the front panel can close unobstructed. (see 17.3 Setting the clearance to avoid collision)

17.3 Setting the clearance to avoid collision

After installing the cabinet front(s), check that the cabinet fronts do not collide.

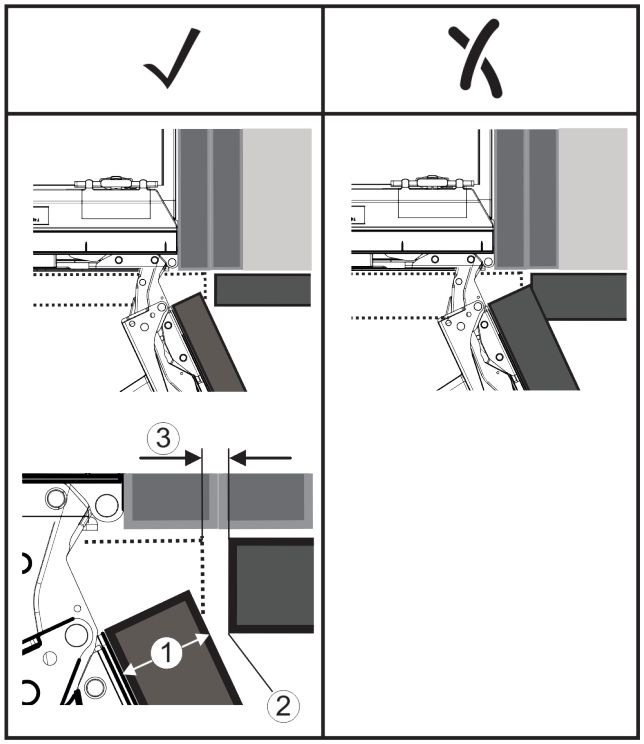

Fig. 73

(1) Front thickness (FD)
(2) Edge radius (R)
(3) Clearance size (S)

	R (2) = 0 mm		R = 1,2 mm		R = 2 mm		R = 3 mm	
FD(1) (mm)	Gmin	Gmax	Gmin	Gmax	Gmin	Gmax	Gmin	Gmax
16	0,3	0,9	0,1	0,4	0,1	0,2	0,1	0,2
19	0,7	2,4	0,3	1,9	0,23	3,25	0,1	0,8
20	2	4,3	1,5	3,6	1	3,1	0,6	2,7
22	3,5	6,3	3	5,6	2,6	5,3	2,1	4,6
24	5,5	8,3	5	7,8	4,5	7,4	4	6,9
26	7,6	10,7	7	10,3	6,6	9,9	6,2	9,4

Fig. 74 Table of clearance limits

G_{min} = min. clearance in mm

G_{max} = max. clearance in mm

Note
When making adjustments, always make sure that the cabinet front suits the general appearance.

Check the collision factors and adjust them accordingly:

▶ Determine the front thickness and edge radius.
▶ Refer to the table for the min./max. clearance dimensions.
▶ Check the clearance size against the table.
▶ Do one of the following depending on the measured clearance size.

Clearance size	Description
$S > G_{max}$	If the clearance size is greater than the two limits, you do not need to make any adjustments.
$S < G_{min}$	If the clearance size is below the limits, you must increase it. Another option is to increase the edge radius.
$G_{min} \leq S \leq G_{max}$	If the clearance is between the two limits, you have to be careful. This will quickly lead to collisions.

18 Water tank*

Depending on your model, the InfinitySpring water tank is behind the lowest drawer in the fridge or BioFresh compartment

18.1 Inserting the water tank

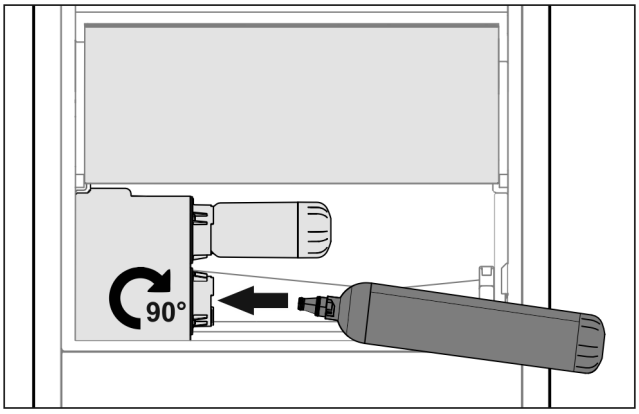

Fig. 75

▶ Remove the drawer.
▶ Insert the water tank and turn approx. 90° to the right until it engages.
▶ Check that the water tank is sealed and no water leaks out.
▶ Insert the drawer.
▶ Vent the water system (see Installation Instructions, Water Connection)

Instead of the water filter, you can use an additional water tank.

Note
The water tank is available as a spare part.

19 Water filter*

Depending on your model, the water filter is behind the lowest drawer in the fridge or BioFresh compartment.

It absorbs deposits in the water and reduces the taste of chlorine.

❑ Replace the water filter at least every 6 months under the specified usage conditions or if the flow rate drops significantly.
❑ The water filter contains carbon and can be disposed of with the regular household waste.

Note
The water filter can be purchased from the Liebherr-Hausgeräte store at home.liebherr.com/shop/de/deu/zubehor.html.

19.1 Installing the water filter

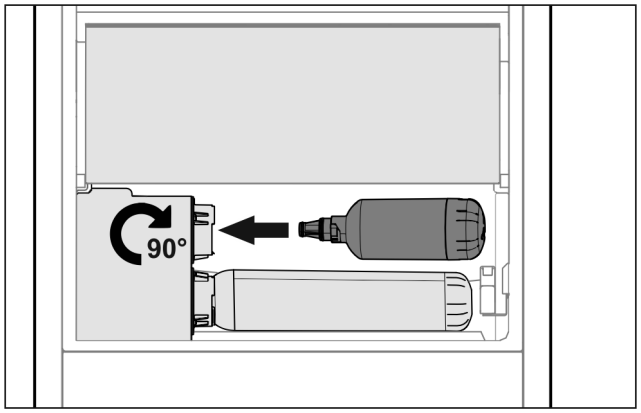

Fig. 76

▶ Remove the drawer.
▶ Insert the water filter and turn clockwise approx. 90° until it engages.
▶ Make sure the filter does not leak and no water is coming out.
▶ Insert the drawer.

CAUTION
New water filters may contain particulate matter.
▶ Draw 3 l of water from the InfinitySpring and dispose of it.

▷ The water filter is now ready for use.

20 Connecting the appliance

WARNING
Danger of fire due to incorrect connection!
Burns.
Damage to the appliance.
▶ Do not use an extension cord.
▶ Do not use a multipoint connector strip.

NOTICE
Danger of damage to incorrect connection!
Damage to the appliance.
▶ Do not connect the appliance to a stand-alone inverter, e.g. solar power systems and petrol generators.

Note
Only use the mains cable supplied.
▶ A longer mains cable can be ordered from Customer Service.

Make sure that the following requirements are fulfilled:

- The type of current and voltage at the installation site complies with the information on the serial tag .
- The socket is grounded and fused in accordance with regulations.
- The tripping current for the fuse is between 10 and 16 A.
- The socket is easily accessible.

▶ Check the electrical connection.
▶ Connect the mains plug to the power supply.
▷ The Liebherr logo appears on the screen.
▷ The display switches to the standby symbol.



home.liebherr.com/fridge-manuals

EN Refrigerators and freezers for integrated use, door-on-door

Issue date: 20240612

Part number index: 7088422-00

Liebherr-Hausgeräte GmbH
Memminger Straße 77-79
88416 Ochsenhausen
Deutschland