User Guide

Quality, Design and Innovation

home.liebherr.com/fridge-manuals

LIEBHERR

Contents

1 Appliance at a glance..... 3
1.1 Scope of delivery..... 3
1.2 Overview of appliances and equipment..... 3
AutoDoor..... 3
1.4 SmartDevice..... 4
1.5 Appliance range of use..... 4
1.6 Conformity..... 4
1.7 SVHC substances according to REACH regulation. 4
1.8 EPREL database..... 5

2 General safety instructions..... 5

3 Functionality of the Touch & Swipe display..... 6
3.1 Navigation and symbol explanation..... 6
3.2 Menus..... 7
3.3 Sleep mode..... 7

4 Putting into operation..... 7
4.1 Switching on appliance (first use)..... 7
4.2 Starting the IceMaker for the first time..... 8

5 Storage..... 8
5.1 Information regarding storage..... 8
5.2 Freezer compartment..... 8
5.3 Storage times..... 9

6 Saving energy..... 9

7 Controls..... 9
7.1 Controls and displays..... 9
7.1.1 Status display..... 9
7.1.2 Display symbols..... 9
7.2 Appliance functions..... 10
7.2.1 Notes on the appliance functions..... 10
Turn off appliance..... 10
WiFi..... 10
Temperature..... 11
Temperature unit..... 11
AutoDoor..... 11
SuperFrost..... 14
Start defrosting cycle..... 14
PartyMode..... 14
SabbathMode..... 15
EnergySaver..... 15
IceMaker / MaxIce..... 16
IceMaker water supply..... 17
TubeClean..... 17
Display brightness..... 18
Door alarm..... 18
AutoDoor tone..... 18
Input lock..... 18
Language..... 19
Device information..... 19
Software..... 19
Reminder..... 20
Demo mode..... 20
Resetting to factory settings..... 20
7.3 Fault messages..... 21
7.3.1 Warnings..... 21
7.3.2 Message..... 21

8 Features..... 21
8.1 Drawers..... 21
8.2 Pull-out board with IceTower..... 23
8.3 Glass shelves..... 24
8.4 IceMaker..... 25
8.5 VarioSpace..... 26
8.6 Freezer pack..... 26
8.7 Flexible ice compartment divider..... 26

9 Maintenance..... 26
9.1 Disassembling / assembling pull-out systems..... 26
9.2 Defrosting the appliance..... 29
9.3 Cleaning the appliance..... 29

10 Customer help..... 29
10.1 Technical specifications..... 29
10.2 Operating noises..... 30
10.3 Technical fault..... 30
10.4 Customer Service..... 32
10.5 Model plate..... 33

11 Shutting down..... 33

12 Disposal..... 33
12.1 Preparing appliance for disposal..... 33
12.2 Disposing of the appliance in an environmentally friendly manner..... 33

The manufacturer is continually working on the further development of all types and models. Please be aware that we reserve the right to make changes to the shape, equipment and technology.

Symbol	Explanation
	**Read instructions** Please read the information in these instructions carefully to understand all of the benefits of your new appliance.

Symbol	Explanation
	Full instructions on the internet You can find detailed instructions on the internet using the QR code on the front of these instruction or by entering the service number at **home.liebherr.com/fridge-manuals**. The service number can be found on the serial tag: 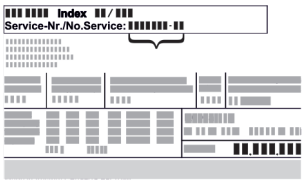 *Fig.* Example illustration
	Check appliance Check all parts for transport damage. If you have any complaints, please contact your agent or customer service.
	Differences These instructions apply to a range of models, so differences are possible. Sections that apply to certain models only are marked with an asterisk (*).
	Instructions and results Instructions are marked with a ▶. Results are marked with a ▷.
	Videos Videos about the appliances are available on the YouTube channels of Liebherr-Hausgeräte.

These operating instructions apply to:

SIFNAd	5188

Note
If your appliance has an N in its appliance designation, it is a NoFrost appliance.

1 Appliance at a glance

1.1 Scope of delivery

Check all parts for transport damage. Contact your dealer or customer service in the event of complaints. (see 10.4 Customer Service)

Your new appliance comes with the following parts:
- Built-in appliance
- Features (depending on the model)
- Installation materials (depending on the model)
- “Quick Start Guide”
- “Installation Guide”
- Service Brochure

1.2 Overview of appliances and equipment

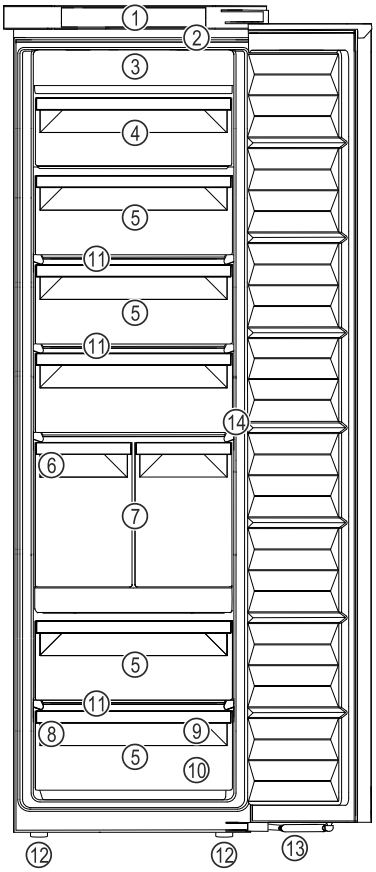

Fig. 1 Example illustration

(1) Controls
(2) LED interior light
(3) NoFrost
(4) Tilting drawer
(5) Drawer
(6) IceMaker
(7) IceTower
(8) Type plate
(9) Freezer tray, cold storage accumulator
(10) Ice cube scoop
(11) VarioSpace
(12) Adjusting feet
(13) Soft-closing mechanism
(14) Knock sensor

Note
▶ Shelves, drawers and baskets are arranged for optimum energy efficiency when the appliance is delivered. Changing how the shelves, for example, are inserted in the fridge compartment does not have any impact on energy consumption.

AutoDoor

Your appliance is equipped with AutoDoor.

You can open the door in various ways:
- by hand
- by knocking
- by smartphone
- by voice command

	Knocking You can open and close the door by knocking on it with your hand. You can configure the knocking signal using the display and controls. You can change the sensitivity to knocking at any time.

	Smartphone You can open and close the door by smartphone. To do this you must install the SmartDevice app on your smartphone and connect your appliance to the WiFi. You make all the settings in the SmartDevice app.
	Voice command You can open and close the door by voice command. To do this you must install the SmartDevice app on your smartphone, connect your appliance to the WiFi and use a suitable voice assistant. You make all the settings in the SmartDevice app.



You can find detailed information and tutorials at:
home.liebherr.com/faq-autodoor

1.4 SmartDevice

SmartDevice is the networking solution for your freezer.

If your appliance SmartDevice-enabled or compatible, you can quickly and easily connect your appliance to your WiFi. With the SmartDevice app, you can operate your appliance from a mobile device. Additional functions and setting options are available in the SmartDevice SmartDevice app.

SmartDevice-enabled appliance:	Your appliance is capable of being a SmartDevice. To be able to connect your device to WiFi, you need to download the SmartDevice app.



More information about SmartDevice:	**smartdevice.liebherr.com**
Downloading the SmartDevice app:	After installing and configuring the SmartDevice, you can connect your appliance to the WiFi using the SmartDevice app and the WiFi appliance function (see WiFi) .

Note
The SmartDevice function is not available in the following countries: Russia, Belarus, Kazakhstan.

1.5 Appliance range of use

Intended use

The appliance is only suitable for cooling food products in a domestic or household-like environment. This includes, for example, use:

- in staff kitchens, bed and breakfast establishments,
- by guests in country houses, hotels, motels and other accommodation,
- for catering and similar services in the wholesale trade.

All other types of use are not permitted.

Foreseeable misuse

The following applications are expressly forbidden:

- Storing and refrigerating medicines, blood plasma, laboratory preparations or similar substances and products based on the Medical Device Directive 2007/47/EC
- Use in areas at risk of explosions

Misusing the appliance may lead to damage to the goods stored or they may spoil.

Climate classifications

Depending on the climate classification the appliance is designed to operate in restricted ambient temperatures. The climate classification applying to your appliance is printed on the rating plate.

Note
▶ Keep to the specified ambient temperatures in order to guarantee that the appliance works properly.

Climate classification	for ambient temperatures of
SN	10 °C to 32 °C
N	16 °C to 32 °C
ST	16 °C to 38 °C
T	16 °C to 43 °C
SN-ST	10 °C to 38 °C
SN-T	10 °C to 43 °C

1.6 Conformity

The refrigerant circuit has been tested for leaks. When installed, the appliance complies with the applicable safety regulations and with the corresponding directives.

For the market:	EU	The appliance complies with directive 2014/53/EU.
For the market:	GB	The appliance complies with Radio Equipment Regulations 2017 SI 2017 No. 1206.

The full text of the EU Declaration of Conformity is available on the following website: www.Liebherr.com

1.7 SVHC substances according to REACH regulation

You can check whether your appliance contains SVHC substances according to REACH regulation at the following link: home.liebherr.com/de/deu/de/liebherr-erleben/nachhaltigkeit/umwelt/scip/scip.html

1.8 EPREL database

Details about energy labelling and ecodesign requirements will be available on the European product database (EPREL) from 1st March 2021. You can access the product database at the following link: https://eprel.ec.europa.eu/ You will be asked to enter the model ID. You can find the model ID on the nameplate.

2 General safety instructions

Please keep these operating instructions in a safe place so you can refer back to them at any time.

If you pass the appliance on, please hand these operating instructions to the next user.

Read these operating instructions carefully before use to ensure safe and correct use of the appliance. Follow the instructions, safety instructions and warning messages included at all times. They are important for ensuring you can operate and install the appliance safely and without any problems.

Danger for the user:

- This device can be used by children and people with impaired physical, sensory or mental abilities or with a lack of experience and knowledge provided that they are supervised or have received instruction in the safe use of this device, and about the resulting hazards. Children must not play with this appliance. Cleaning and user maintenance work must not be carried out by children without adult supervision. Children aged between 3 and 8 are allowed to load and unload the appliance. Children below the age of 3 must be kept away from the appliance unless they are under continuous adult supervision.
- The socket must be easily accessible so that the appliance can be disconnected quickly from the electricity in an emergency. It must not be located in the area behind the appliance.
- When disconnecting the appliance from the supply, always take hold of the plug. Do not pull the cable.
- In the event of a fault pull out the mains plug or deactivate the fuse.
- Do not damage the mains power cable. Do not operate the appliance with a defective mains power cable.
- Only customer service or other specially trained staff may repair or perform other operations on the appliance.
- Only install, connect and dispose of the appliance according to the instructions.
- Only use the appliance when is installed.
- The manufacturer is not liable for damage caused by a faulty fixed water connection.

Fire hazard:

- The coolant used (information on the model plate) is ecofriendly but also flammable. Any leaking coolant may ignite.
  - Do not damage the refrigerant circuit pipes.
  - Do not handle ignition sources inside the appliance.
  - Do not use electrical appliances inside the appliance (e.g. steam cleaners, heaters, ice cream makers, etc.).
  - If the refrigerant leaks: remove any naked flames or ignition sources from the vicinity of the leakage point. Properly air the room. Inform customer services.
- Do not store explosives or sprays using combustible propellants such as butane, propane, pentane, etc. in the appliance. To identify these spray cans, look for the list of contents printed on the can, or a flame symbol. Gases possibly escaping may ignite due to electrical components.
- Keep burning candles, lamps and other items with naked flames away from the appliance so that they do not set the appliance on fire.
- Please be sure to store alcoholic drinks or other packaging containing alcohol in tightly closed containers. Any alcohol that leaks out may be ignited by electrical components.

Danger of tipping and falling:

- Do not misuse the plinth, drawers, doors etc. as a step or for support. This applies particularly to children.

Danger of food poisoning:

- Do not consume food which has been stored too long.

Danger of frostbite, numbness and pain:

- Avoid prolonged skin contact with cold surfaces or refrigerated/frozen goods or take protective measures, e.g wear gloves.

Danger of injury and damage:

- Hot steam can lead to injury. Do not use electrical heating or steam cleaning equipment, open flames or defrosting sprays to defrost.
- Do not use sharp implements to remove the ice.

Risk of crushing:



Fig. 2

- When the door is closing, keep the door area clear and do not reach inside.
- Do not hold the hinge when opening and closing the door. Fingers may get caught.

Risk of damage:

If the door closes automatically, drawers and telescopic rails which are pulled out may be damaged.

- Push the drawers all the way in before the door closes automatically.
- If drawer has been removed: Push the telescopic rails all the way in before the door closes automatically.

Symbols on the appliance:



This symbol may be located on the compressor. It relates to the oil in the compressor and makes reference to the risk that: Swallowing or inhaling can be fatal. This advice is only relevant to recycling. There is no danger in normal operation.



This symbol is located on the compressor and indicates the danger of flammable materials. Do not remove the sticker.



This or a similar sticker may be located on the rear of the appliance. This sticker indicates that there are vacuum insulation panels (VIP) or perlite panels in the door and/or housing. This advice is only relevant to recycling. Do not remove the sticker.

Please note the warning messages and other specific advice in the other chapters:

⚠	DANGER	indicates an immediately hazardous situation which will lead to death or serious injuries if it is not avoided.
⚠	WARNING	indicates a hazardous situation which may lead to death or serious injuries if it is not avoided.
⚠	CAUTION	indicates a hazardous situation which may lead to minor or moderate injuries if it is not avoided.
	NOTICE	indicates a hazardous situation which may lead to damage to property if it is not avoided.
	Note	indicates useful instructions and tips.

3 Functionality of the Touch & Swipe display

You operate your appliance using the Touch & Swipe display. You select appliance functions in the Touch & Swipe display (hereafter referred to as display) by tapping them. If you do not perform any action on the display for 10 seconds, the display either jumps back to the higher-level menu or directly to the status display.

3.1 Navigation and symbol explanation

In the illustrations, different symbols are used to navigate the display. The following table describes these symbols.

Symbol	Description
	**Briefly touch the display:** Activates/deactivates function. Confirms selection. Opens submenu.
	**Touch the display for a specified time (e.g. 3 seconds):** Activates/deactivates function or value.
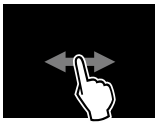	**Swipe left or right:** Navigate in the menu.
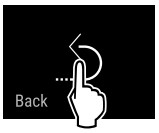	**Briefly touch the Back symbol:** Jumps back one menu level.
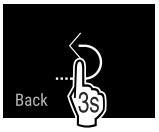	**Press and hold the Back symbol for 3 seconds:** Jumps back to the status display.
	**Arrow with clock:** It takes more than 10 seconds for the following message to appear in the display.
	**Arrow with a time indication:** It takes the specified amount of time until the following message appears in the display.

*** Depending on model and options**

Symbol	Description
	**“Open Settings menu” symbol:** Navigates to the Settings menu and opens the settings menu. If necessary: Navigate to the desired function in the Settings menu. (see 3.2.1 Opening the Settings menu)
	**“Open Advanced menu” symbol:** Navigates to the Advanced menu and opens the advanced menu. If necessary: Navigate to the desired function in the Advanced menu. (see 3.2.2 Opening the expanded menu)
No action for 10 seconds	If you do not perform any action on the display for 10 seconds, the display either jumps back to the higher-level menu or directly to the status display.
Open door and close it again.	If you open the door and immediately close it again, the display jumps directly back to the status display.

Note: Illustrations of the display are shown in the English version.

3.2 Menus

The appliance functions are distributed over various menus:

Menu	Description
Main menu	When you switch the appliance on, you are automatically in the main menu. From here you can navigate to the most important appliance functions, to the Settings menu and to the Advanced menu.
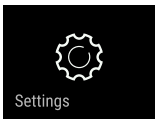 Settings menu	The Settings menu contains additional appliance functions for setting up your appliance.
Advanced menu	The advanced menu contains special appliance functions for setting up your appliance. Access to the Advanced menu is protected by the numerical code **1 5 1**.

3.2.1 Opening the Settings menu

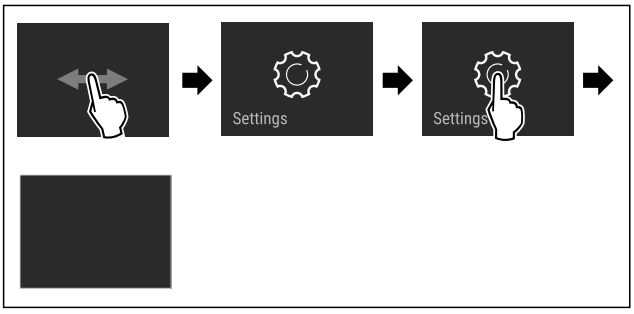

Fig. 3 Example illustration

▶ Carry out action steps according to the illustration.
▷ Settings menu is open.
▶ If necessary: Navigate to the desired function.

3.2.2 Opening the expanded menu



Fig. 4

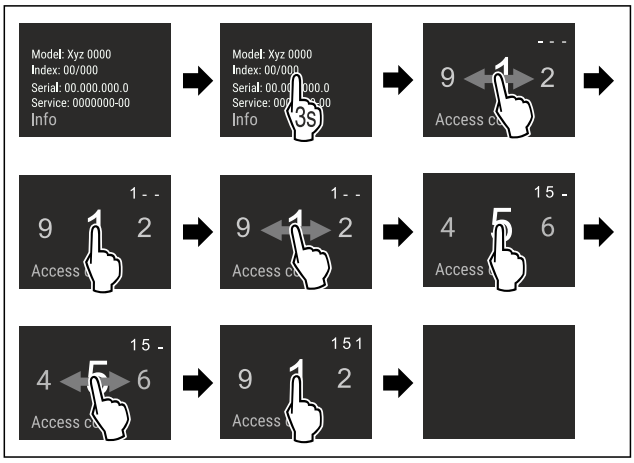

*Fig. 5 Example illustration, access with numerical code **151***

▶ Carry out action steps according to the illustration.
▷ The expanded menu is open.
▶ If necessary: Navigate to the desired function.

3.3 Sleep mode

If you do not touch the display for 1 minute, the display switches to sleep mode. In sleep mode, the display brightness is dimmed.

3.3.1 Ending sleep mode

▶ Touch the display briefly with your finger.
▷ Sleep mode is ended.

4 Putting into operation

4.1 Switching on appliance (first use)

Make sure that the following requirements are fulfilled:

❑ The appliance is properly installed and connected according to the installation instructions.
❑ All adhesive strips, adhesive and protective films and transport locks are removed from inside and on the appliance.
❑ All marketing leaflets are removed from the drawers.
❑ You are familiar with the functionality of the Touch & Swipe display. (see 3 Functionality of the Touch & Swipe display)

Switch on the appliance using the Touch & Swipe display:

▶ If the display is in sleep mode: Briefly touch the display.
▶ Carry out action steps according to the illustration.

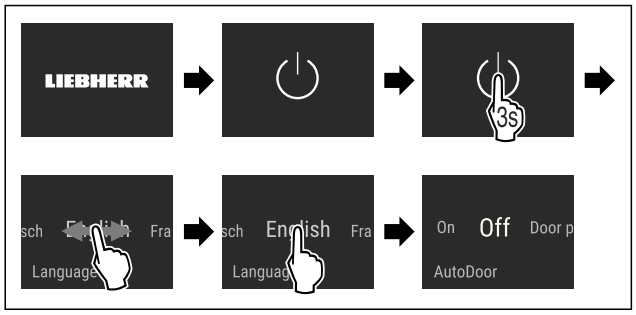

Fig. 6 Example illustration

▶ Activate AutoDoor. (see AutoDoor)

-or-

▶ Do not activate AutoDoor.

Note

If you do not activate AutoDoor, you can always open or close the door manually.

▷ The status display appears.
▷ The appliance cools to the temperature set at the factory.
▷ The appliance starts in demo mode (status display with DEMO appears): If the appliance starts in demo mode, you can deactivate demo mode within the next 5 minutes. (see Demo mode)

More information:

- Start the IceMaker for the first time. (see 4.2 Starting the IceMaker for the first time)
- Start the SmartDevice for the first time. (see 1.4 SmartDevice) and (see WiFi)

Note

The manufacturer recommends:

▶ **Store frozen foods** at -18 °C or colder.
▶ Observe the notes on storing food. (see 5.1 Information regarding storage)

Note

Accessories can be purchased from the Liebherr-Hausgeräte store at home.liebherr.com/shop/de/deu/zubehor.html.

4.2 Starting the IceMaker for the first time

If your appliance is equipped with IceMaker, you must clean the IceMaker **before using it for the first time**.

Make sure that the following requirements are fulfilled:

❑ The water supply has been connected. See Installation Guide or mounting instructions.
❑ The appliance is properly installed and connected.

▶ Clean the IceMaker. (see 9.3.4 Cleaning the IceMaker)

5 Storage

5.1 Information regarding storage

WARNING

Risk of fire

▶ Do not use any electrical appliances in the food area of the appliance unless recommended by the manufacturer.

Note

The energy consumption increases and the cooling power goes down if ventilation is not sufficient.

▶ Always keep air slots clear.

Observe the following specifications for storage:

- Keep the air vents on the inside of the rear wall free.
- Package food properly.
- Package raw meat or fish in clean, closed containers. This will prevent meat or fish from touching or dripping onto other food.
- Leave space between goods to ensure good air circulation.
- Store food according to the instructions on the packaging.
- Always observe the best-before date indicated on the packaging.

Note

Failure to follow these guidelines can lead to foodstuffs spoiling.

5.2 Freezer compartment

Here, a dry, frosty storage climate is created at -18 °C. The frosty storage climate is suitable for storing frozen food for several months, for making ice cubes or freezing fresh food.

5.2.1 Freezing food

Freezing quantity

The maximum amount of fresh food that you can freeze within 24 hours is specified on the type plate (see 10.5 Model plate) under “Freezing capacity ... kg/24h”.

To ensure that food quickly freezes through, adhere to the following quantities per package:

- Fruit and vegetables up to 1 kg
- Meat up to 2.5 kg

Freezing food using SuperFrost

Depending on the quantity to be frozen, you can activate SuperFrost before freezing in order to achieve lower freezing temperatures. (see SuperFrost)

▶ Activate SuperFrost if the amount of food you have to freeze is more than approx. 2 kg.

The time at which you activate SuperFrost depends on the amount of food you have to freeze:

Freezing quantity	Time at which you should activate SuperFrost
Small amount of food to freeze	Activate SuperFrost about 6 hours before freezing. You can place the food in the freezer as soon as the appliance automatically deactivates SuperFrost.
Maximum amount of food to freeze	Activate SuperFrost about 24 hours before freezing. You can place the food in the freezer as soon as the appliance automatically deactivates SuperFrost.

Arranging your food properly

CAUTION
Risk of injury from broken glass!
Bottles and cans with beverages can burst during freezing. This applies in particular to carbonated beverages.
▶ Only freeze bottles and cans with beverages if you have activated the BottleTimer function in the SmartDevice app.

Appliance height < 1220 mm	
Freezing quantity	Arranging your food properly
Small amount of food to freeze	Distribute packaged groceries throughout all drawers. If possible, place groceries at the back of the drawer near the rear wall.
Maximum amount of food to freeze	Distribute packaged groceries throughout all drawers. If possible, place groceries at the back of the drawer near the rear wall.

Appliance height ≥ 1220 mm	
Freezing quantity	Arranging your food properly
Small amount of food to freeze	Distribute packaged groceries throughout all drawers, but do not place any groceries in the top drawer.
Maximum amount of food to freeze	Distribute packaged groceries throughout all drawers. If possible, place groceries at the back of the drawer near the rear wall.

5.2.2 Defrosting food

WARNING
Risk of food poisoning!
▶ Do not re-freeze thawed food.
▶ Use defrosted foodstuff as soon as possible.

You can defrost food in several ways:
- In the fridge compartment
- In the microwave
- In the oven/fan-assisted oven
- At room temperature

▶ Take out only as much food as necessary.

5.2.3 Freezer tray

You can freeze berries, herbs, vegetables and other small frozen food in the freezer tray without it all freezing together. The frozen food is less likely to get squashed and subsequent portioning is easier.

In addition, you can store the cold storage accumulators in the freezer tray to save space.
▶ Distribute food on the freezer tray without packaging and well spaced out.

5.3 Storage times

Refer to the specified storage times as a guide.

In the case of foods with a minimum shelf life, the date indicated on the packaging still applies.

Recommended storage period for various types of food		
Ice cream	at -18 °C	2 to 6 months
Sausages, ham	at -18 °C	2 to 3 months
Bread, baked goods	at -18 °C	2 to 6 months
Game, pork	at -18 °C	6 to 9 months
Fatty fish	at -18 °C	2 to 6 months
Lean fish	at -18 °C	6 to 8 months
Cheese	at -18 °C	2 to 6 months
Poultry, beef	at -18 °C	6 to 12 months
Vegetables, fruit	at -18 °C	6 to 12 months

6 Saving energy

- Pay attention to good ventilation. Do not cover ventilation holes or grids.
- Always keep the fan air slits clear.
- Do not install the appliance in direct sunlight, next to an oven, radiator or similar.
- Energy consumption depends on the installation conditions, e.g. the ambient temperature (see 1.5 Appliance range of use) . A warmer ambient temperature can increase the energy consumption.
- Open the appliance for as short a time as possible.
- The lower the temperature is set the higher the energy consumption.
- Keep all food properly packed and covered. This prevents frost from forming.
- Inserting warm food: allow to cool down to room temperature first.

7 Controls

7.1 Controls and displays

7.1.1 Status display

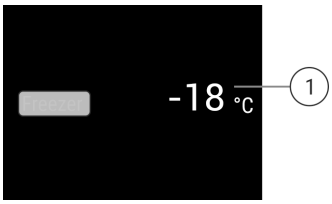

Fig. 7
(1) Temperature display

The Status display shows the set temperatures and is the home display. From there, you can navigate to the options and settings.

7.1.2 Display symbols

Display symbols provide information on the current appliance status:

Symbol	Appliance status
	**Standby** The appliance or temperature zone is switched off.

Symbol	Appliance status
 	**Flashing number** Appliance is working. Temperature flashes until the set temperature is reached.
 	**Flashing symbol** Appliance is working. Setting is made.

7.2 Appliance functions

7.2.1 Notes on the appliance functions

The appliance functions are set at the factory so that your appliance is fully functional.

Before you alter, activate or deactivate the device functions, make sure that the following requirements are met:

- ❑ You have read and understood the descriptions of how the display works.
- ❑ You have familiarised yourself with the operating and display elements of your appliance.

Turn off appliance

This setting turns off the whole appliance.

Switching off the entire appliance



Fig. 8

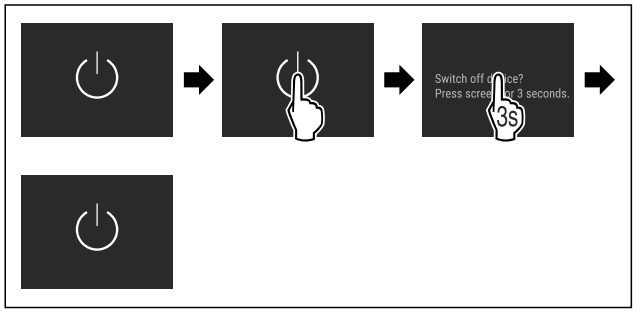

Fig. 9

▶ Turning off the IceMaker .
▷ Off: Display goes black.

WiFi

Use this function to connect your appliance to WiFi. You can then operate it via the SmartDevice app on a mobile device. You can also use this function to disconnect or reset the WiFi connection.

More information on the SmartDevice: (see 1.4 SmartDevice)

Note
The SmartDevice function is not available in the following countries: Russia, Belarus, Kazakhstan.

Establishing the WiFi connection for the first time

Make sure that the following requirements are fulfilled:

- ❑ You have installed the SmartDevice app (see apps.home.liebherr.com).
- ❑ Registration in the SmartDevice app is completed.



Fig. 10

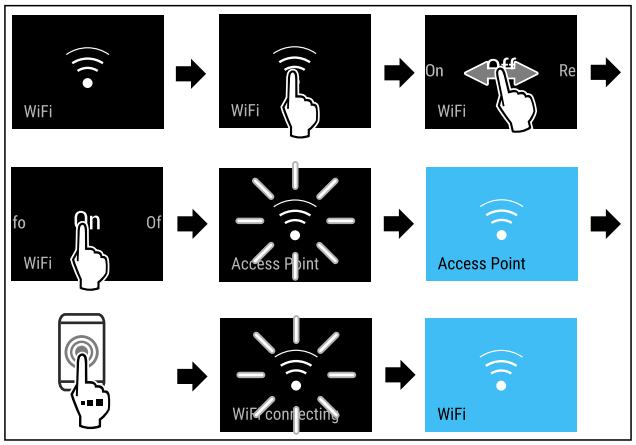

Fig. 11

▶ Carry out action steps according to the illustration.
▷ Connection is established.

Disconnecting from the WiFi



Fig. 12

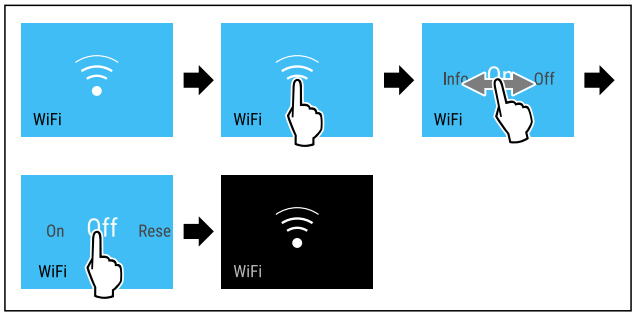

Fig. 13

▶ Carry out action steps according to the illustration.
▷ There is no connection.

Resetting the WiFi connection



Fig. 14

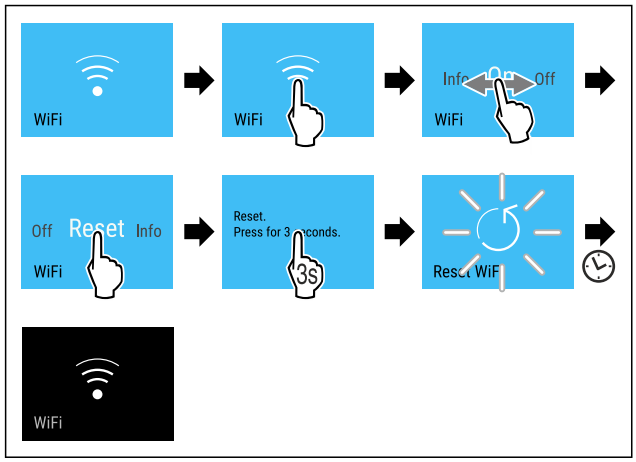

Fig. 15

▶ Carry out action steps according to the illustration.
▷ WiFi connection and other WiFi settings are reset to factory settings.

Showing information about the WiFi connection



Fig. 16

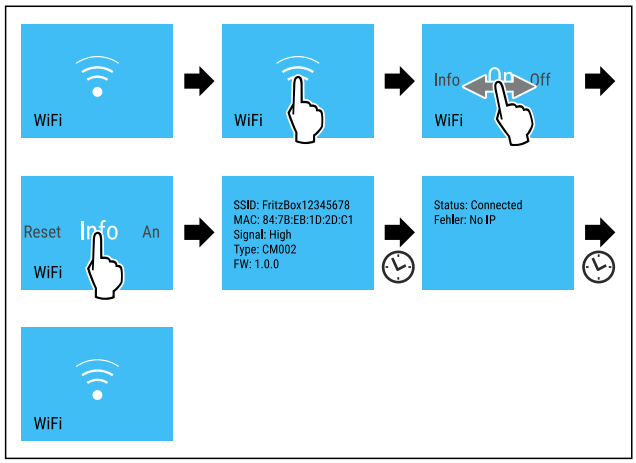

Fig. 17

▶ Carry out action steps according to the illustration.

-18 °C Temperature

Use this function to set the temperature.

The temperature depends on the following factors:

- How often the door is opened
- How long the door is open for
- The room temperature of the installation site
- The type, temperature and amount of food

Freezer compartment	Recommended setting
-18 °C	-18 °C

Setting temperature

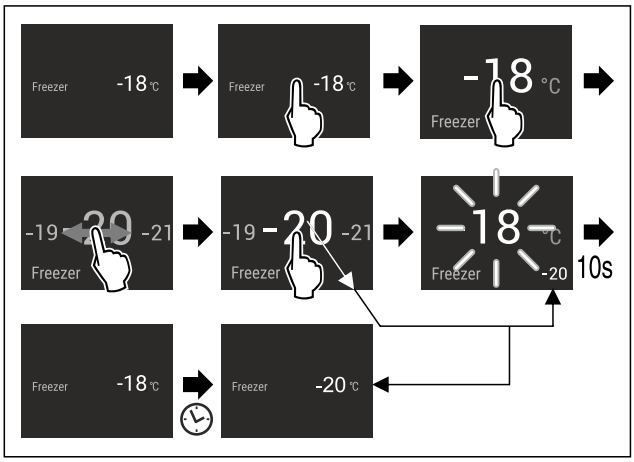

Fig. 18

▶ Carry out action steps according to the illustration.
▷ Temperature is set.

°C/°F Temperature unit

Use this function to set the temperature unit. You can set degrees Celsius or degrees Fahrenheit as the temperature unit.

Setting the temperature unit



Fig. 19

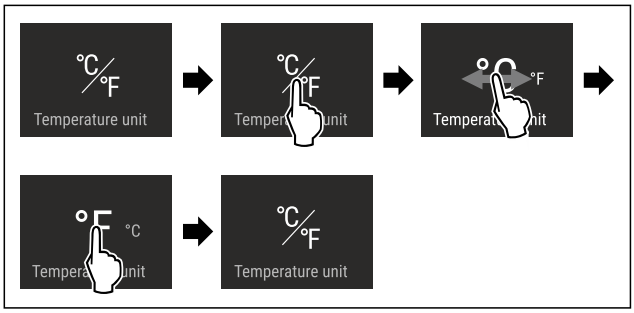

Fig. 20 Example illustration: Switch from degrees Celsius to degrees Fahrenheit.

▶ Carry out action steps according to the illustration.
▷ The temperature unit is set.

AutoDoor

Use this function to activate and configure AutoDoor when commissioning the device or at a later time. If you have already activated and configured AutoDoor, deactivate AutoDoor with this function. This function can also be used to configure the door opening angle.

If AutoDoor is activated, the door can be opened in different ways:

- by knocking signal
- by smartphone
- by voice command

Note
If you do not activate AutoDoor, you can always open or close the door manually.

If the function is active, the device operates at higher power. As a result, the device's operating noise may be temporarily louder and energy consumption will increase.

Activating and configuring AutoDoor for the first time

Activate and configure AutoDoor for the first time either directly during **commissioning** of the device or at a later time.



Fig. 21

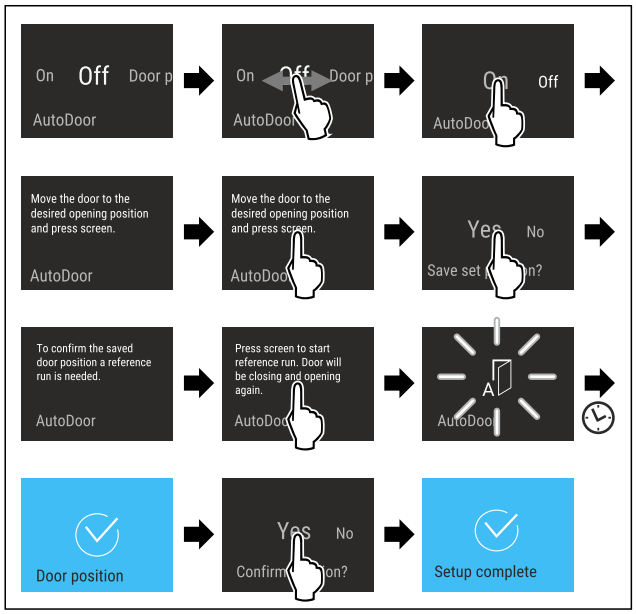

Fig. 22

- ▶ Carry out the steps shown in the illustration until the display prompts you to move the door to the desired position.
- ▶ To configure the door opening angle: Open door at least 70°.
- ▶ Ensure that the door does not touch any neighbouring furniture or walls.
- ▶ To confirm the door opening angle: Touch the display for a short time as per the illustration.
- ▶ To save the door opening angle: Confirm the message in the display as shown.

CAUTION

Risk of injury from automatic opening and closing of the door!

- ▶ Keep the door opening area clear.
- ▶ Do not reach into the hinge with your hand.
- ▶ Do not block the door.

NOTICE

Damage to the drawers and telescopic rails from automatic closing of the door!

- ▶ Before the door closes: Push the drawers all the way in.
- ▶ Before the door closes and when drawer has been removed: Push the telescopic rails all the way in.



Fig. 23

To set the door opening angle, the device must perform a reference run of the door.

- ▶ To start a reference run: Touch the display for a short time as per the illustration.
- ▷ Reference run starts.
- ▷ AutoDoor symbol flashes.
- ▷ If reference run is successful: Display turns blue for 2 seconds.
- ▷ A confirmation signal sounds.
- ▶ Confirm the message in the display as shown.
- ▷ Display turns blue.
- ▷ A confirmation signal sounds.
- ▷ AutoDoor configuration is complete.
- ▷ Door can be opened by knocking signal.

Deactivating and activating AutoDoor

You have already activated and configured AutoDoor. You wish to deactivate and activate AutoDoor.

Deactivating AutoDoor



Fig. 24

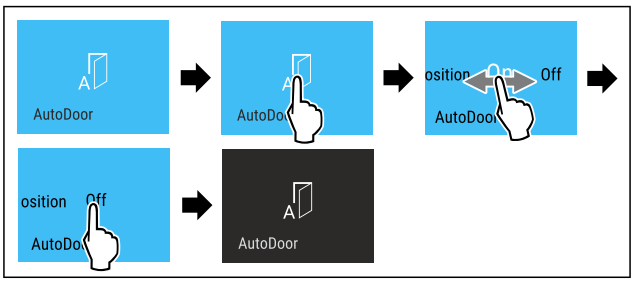

Fig. 25

- ▶ Carry out action steps according to the illustration.
- ▷ AutoDoor is deactivated.
- ▷ Door can be opened manually by hand.

Activating AutoDoor



Fig. 26

* Depending on model and options

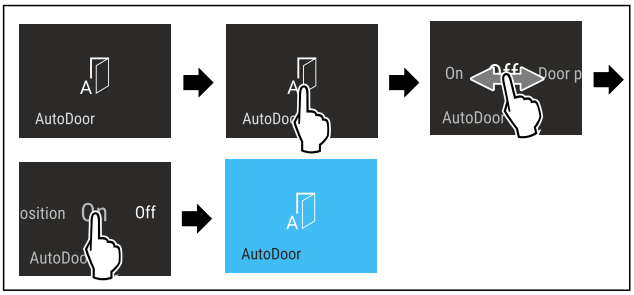

Fig. 27

- ▶ Carry out action steps according to the illustration.
- ▷ AutoDoor is activated.
- ▷ Door can be opened by knocking signal.
- ▷ Previously set door opening angle is still saved.

Changing the door opening angle

You have already configured a door opening angle and you wish to change it.



Fig. 28

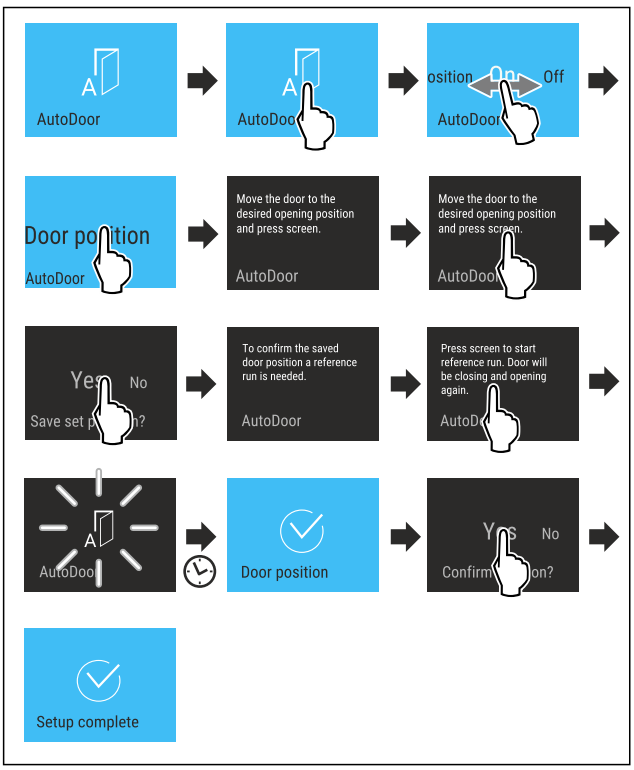

Fig. 29

- ▶ Carry out the steps shown in the illustration until the display prompts you to move the door to the desired position.
- ▶ To configure the door opening angle: Open door at least 70°.
- ▶ Ensure that the door does not touch any neighbouring furniture or walls.
- ▶ To confirm the door opening angle: Touch the display for a short time as per the illustration.
- ▶ To save the door opening angle: Confirm the message in the display as shown.

CAUTION

Risk of injury from automatic opening and closing of the door!

- ▶ Keep the door opening area clear.
- ▶ Do not reach into the hinge with your hand.
- ▶ Do not block the door.

NOTICE

Damage to the drawers and telescopic rails from automatic closing of the door!

- ▶ Before the door closes: Push the drawers all the way in.
- ▶ Before the door closes and when drawer has been removed: Push the telescopic rails all the way in.



Fig. 30

To set the door opening angle, the device must perform a reference run of the door.

- ▶ To start a reference run: Touch the display for a short time as per the illustration.
- ▷ Reference run starts.
- ▷ AutoDoor symbol flashes.
- ▷ If reference run is successful: Display turns blue for 2 seconds.
- ▷ A confirmation signal sounds.
- ▶ Confirm the message in the display as shown.
- ▷ Display turns blue.
- ▷ A confirmation signal sounds.
- ▷ Door opening angle is configured.

Using AutoDoor with a smartphone

You wish to use the smartphone for opening and closing.

- ▶ Activate and configure AutoDoor. (see Activating and configuring AutoDoor for the first time)
- ▶ Install the SmartDevice app on your smartphone.
- ▶ Establishing WLAN connection on the device. (see WiFi)
- ▶ To register the device in the SmartDevice app: Follow the instructions in the SmartDevice app.
- ▷ Door can be opened by smartphone in addition to the knocking signal.

Using AutoDoor with voice command

You want to use a voice command for opening and closing.

- ▶ Activate and configure AutoDoor. (see Activating and configuring AutoDoor for the first time)
- ▶ Install the SmartDevice app on your smartphone.
- ▶ Establishing WLAN connection on the device. (see WiFi)
- ▶ To register the device in the SmartDevice app: Follow the instructions in the SmartDevice app.
- ▶ Install voice assistant.

▷ Door can be opened by voice assistant in addition to the knocking signal.

You can find further information and tutorials at:
home.liebherr.com/faq-autodoor

SuperFrost

This function selects the lowest freezing temperature. This gives you colder storage temperatures.

Use:

- For storing more than 2 kg fresh food every day.
- Freezing fresh food quickly to the core.
- Increasing the cold reserves in the stored goods before defrosting the appliance.

Activating/deactivating the function

With a small amount to freeze:
▶ Activate 6 hours before use.
With a maximum amount to freeze:
▶ Activate 24 hours before use.
▶ Activating/deactivating.
-or-
▶ Activate/deactivate using the SmartDevice app.

The function automatically turns off. The appliance goes back to normal mode. The temperature adjusts itself to the set level.

Start defrosting cycle

Use this function to start the automatic defrosting cycle manually if it does not start automatically in the event of a fault.

Starting defrosting cycle



Fig. 31

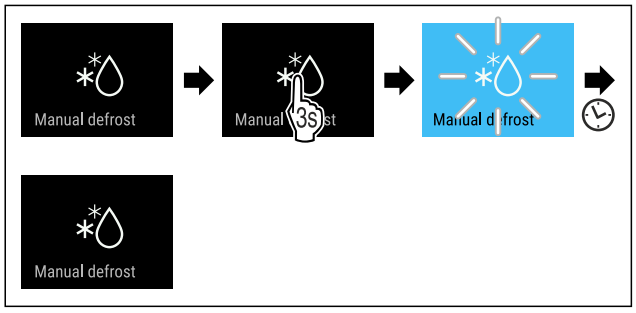

Fig. 32

▶ Carry out action steps according to the illustration.
▷ Defrosting cycle has started: Icon flashes until defrosting cycle is automatically completed.
▷ When defrosting cycle is finished: The device continues to run in normal mode.

Cancelling defrosting cycle

The defrosting cycle will be stopped automatically. However, you can also cancel the defrosting cycle at any time during the defrosting process:

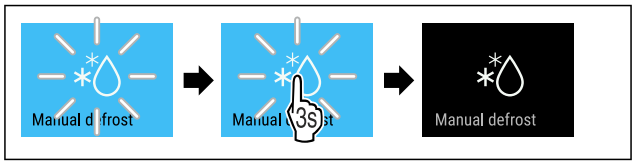

Fig. 33

▶ Carry out action steps according to the illustration.
▷ Defrosting cycle is cancelled.
▷ The device continues to run in normal mode.

PartyMode

You can use this function to activate or deactivate PartyMode. PartyMode activates various functions that are useful for a party.

PartyMode activates the following functions:

- SuperFrost (see SuperFrost)
- IceMaker with MaxIce (see IceMaker / MaxIce)

You can adjust all listed functions individually and flexibly. When you deactivate PartyMode, all changes are discarded.

If the function is active, the device operates at higher power. As a result, the device's operating noise may be temporarily louder and energy consumption will increase.

Activating PartyMode

Make sure that the following requirements are fulfilled:

❑ The IceMaker has been started. (see 4.2 Starting the IceMaker for the first time)



Fig. 34

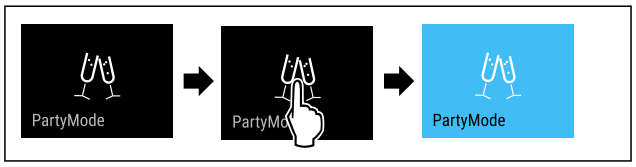

Fig. 35

▶ Carry out action steps according to the illustration.
▷ PartyMode and the associated functions are activated.
▷ The temperature display turns blue.
▷ The current temperature flashes until the target temperature is reached.

Deactivating PartyMode

The PartyMode is automatically deactivated after 24 seconds. However, you can also deactivate PartyMode manually at any time:

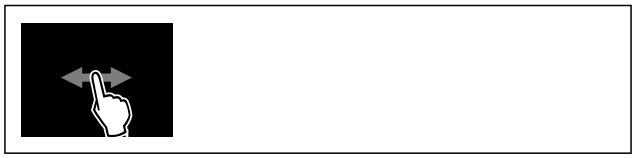

Fig. 36

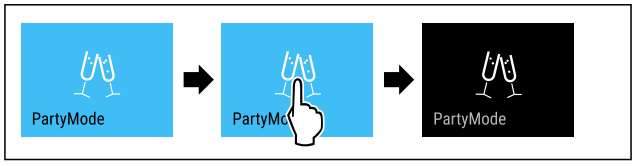

Fig. 37

▶ Carry out action steps according to the illustration.
▷ PartyMode is deactivated.
▷ The appliance cools to the temperature set previously: The current temperature flashes until the target temperature is reached.

SabbathMode

You can use this function to activate or deactivate SabbathMode. If you activate this function, some electronic functions are switched off. As a result, your device meets the religious requirements for Jewish holidays such as Sabbath and complies with STAR-K Kosher certification.

Device status when SabbathMode is active
The status display shows SabbathMode permanently.
All functions on the display are locked except for the **Deactivate SabbathMode function**.
Active functions remain active.
The display remains bright when you close the door.
The interior lighting is deactivated.
Reminders are not implemented. The set time interval stops.
Reminders and warnings are not displayed.
There is no door alarm.
There is no temperature alarm.
The IceMaker is switched off.
The defrosting cycle operates only for the specified time, without considering the device consumption.
After a power failure, the device returns to SabbathMode.

Device status

Note
This appliance has certification from the “Institute for Science and Halacha”. (www.machonhalacha.co.il)

You can find a list of STAR-K-certified appliances at www.star-k.org/appliances.

Activating SabbathMode

WARNING
Danger of food poisoning from spoiled food!
If you have SabbathMode activated and a power failure occurs, no message appears in the status display about the power failure. Once the power is restored, the appliance continues to operate in SabbathMode. The power failure may mean that food spoils and the consumption of this food could lead to food poisoning.
After a power failure:

▶ Do not consume food that was frozen and has thawed out.



Fig. 38

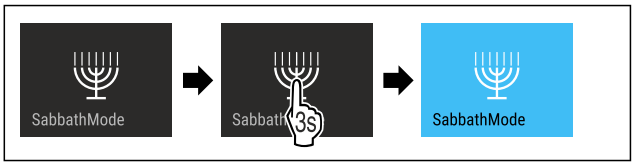

Fig. 39

▶ Carry out action steps according to the illustration.
▷ SabbathMode is activated.
▷ The status display shows SabbathMode permanently.

Deactivating SabbathMode

The SabbathMode is automatically deactivated after 80 hours. However, you can also deactivate SabbathMode manually at any time:

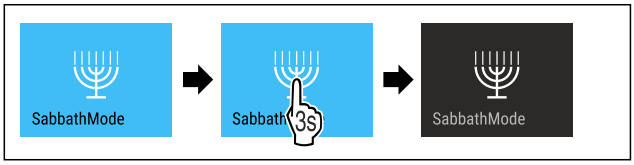

Fig. 40

▶ Carry out action steps according to the illustration.
▷ SabbathMode is deactivated.

EnergySaver

You can use this function to activate or deactivate Energy saving mode. If energy saving mode is activated, the energy consumption decreases and the temperature in the device increases. The food remains fresh, but the shelf life is shortened.

Temperature zone	Recommended setting (see Temperature)	Temperature with active EnergySaver
-18 °C	-18 °C	-16 °C

Temperatures

Activating EnergySaver

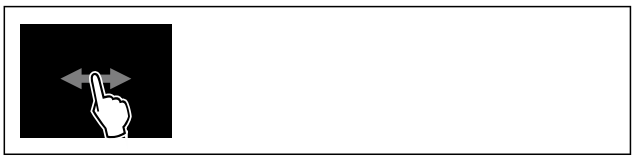

Fig. 41

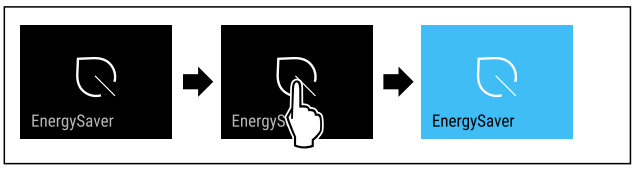

Fig. 42

▶ Carry out action steps according to the illustration.
▷ Energy saving mode is activated.

Deactivating EnergySaver



Fig. 43

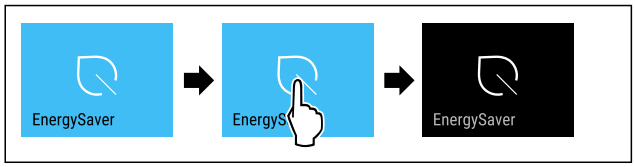

Fig. 44

▶ Carry out action steps according to the illustration.
▷ Energy saving mode is deactivated.

IceMaker / MaxIce

You can activate or deactivate ice cube production with the IceMaker function. Use the MaxIce function to increase the number of ice cubes in the IceMaker.

More information on the number of ice cubes:	(see 10.1 Technical specifications)
Further information on the IceMaker water supply:	(see IceMaker water supply)
More information on cleaning the lines of the IceMaker:	(see TubeClean)

If the function is active, the device operates at higher power. As a result, the device's operating noise may be temporarily louder and energy consumption will increase.

Activating IceMaker

Make sure that the following requirements are fulfilled:

❑ The water supply is established at the fixed water connection. See installation instructions.
❑ IceMaker is put into operation. (see 8.4 IceMaker)

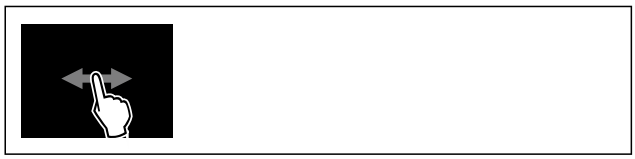

Fig. 45

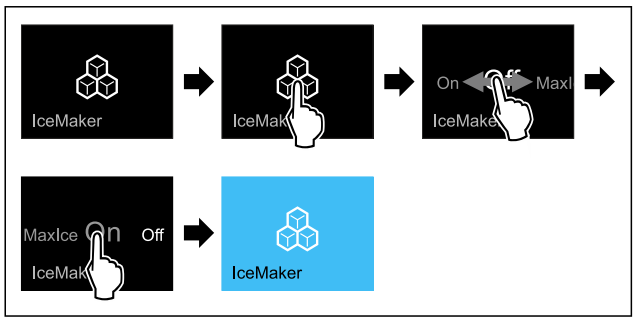

Fig. 46

▶ Carry out action steps according to the illustration.

-or-

▶ Activate with the SmartDevice app.

▷ IceMaker is activated. It can take up to 24 hours for the IceMaker to produce the first ice cubes.

Activating the IceMaker with MaxIce

If you have not activated the IceMaker function before, make sure that the following requirements are met:

❑ The water supply is established at the fixed water connection. See installation instructions.
❑ IceMaker is put into operation. (see 8.4 IceMaker)

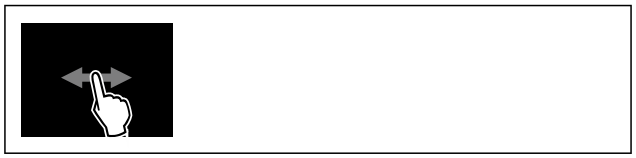

Fig. 47

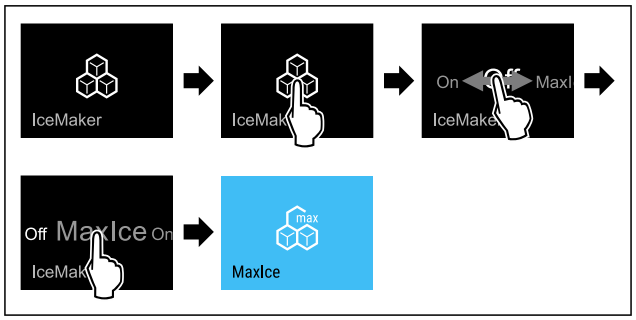

Fig. 48

▶ Carry out action steps according to the illustration.

-or-

▶ Activate with the SmartDevice app.

▷ The IceMaker is activated with MaxIce.

Changing between the IceMaker and MaxIce

If you have activated the IceMaker and would like to change to MaxIce:



Fig. 49

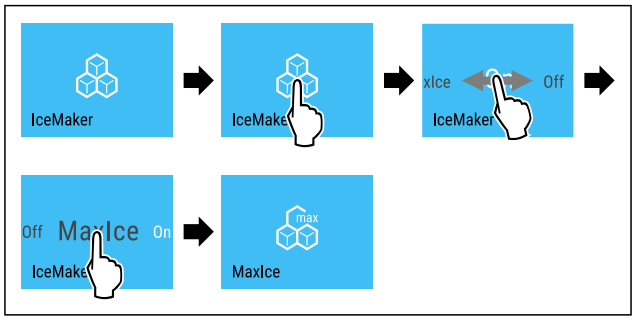

Fig. 50

▶ Carry out action steps according to the illustration.
▷ The IceMaker is activated with MaxIce.

If you have activated MaxIce and would like to change to the IceMaker:

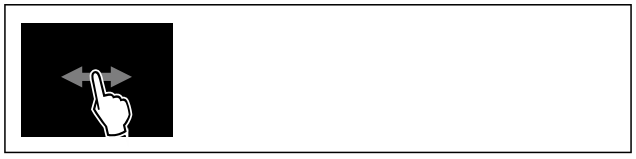

Fig. 51

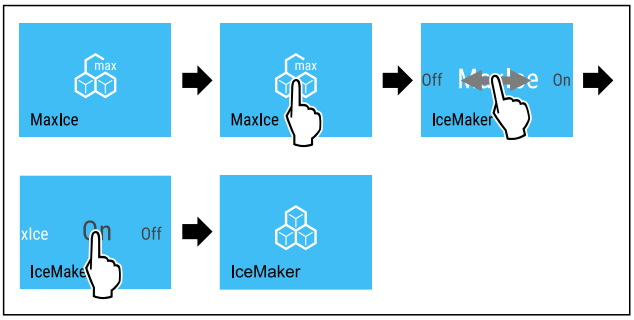

Fig. 52

▶ Carry out action steps according to the illustration.
▷ IceMaker is activated.
▷ MaxIce is deactivated.

Deactivating the IceMaker / MaxIce



Fig. 53

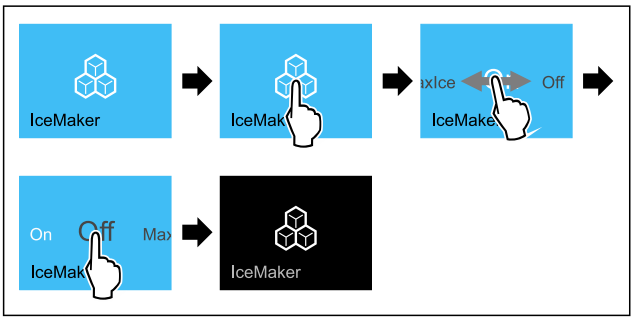

Fig. 54 Example illustration of the active IceMaker function

▶ Carry out action steps according to the illustration.

-or-

▶ Deactivate with the SmartDevice app.

▷ IceMaker and MaxIce are deactivated.
▷ If ice cubes are currently being made, the system completes the process.
▷ The IceMaker goes off automatically.

5 IceMaker water supply

Use this function to set the IceMaker water supply. The IceMaker water supply regulates the amount of water supplied. The IceMaker water supply can be changed if the water supply does not match the water pressure and the ice cube size dispensed.

The IceMaker water supply is pre-set to value 5 as delivered. A value from 1 (smallest inflow volume) to 8 (largest inflow volume) can be selected.

Setting the IceMaker water supply

Make sure that the following requirements are fulfilled:

❑ The IceMaker has been started. (see 4.2 Starting the IceMaker for the first time)
❑ IceMaker is activated. (see IceMaker / MaxIce)



Fig. 55

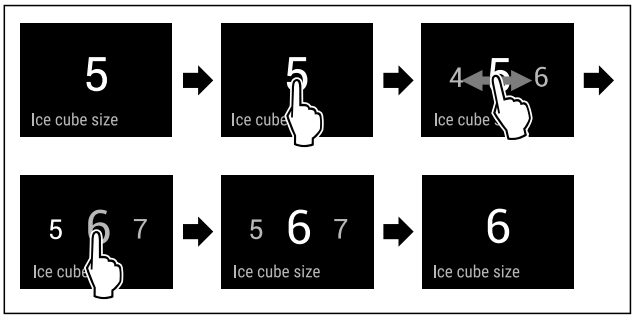

Fig. 56 Example illustration: Switch from value 5 to value 6.

▶ Carry out action steps according to the illustration.
▷ IceMaker water supply is set.

TubeClean

You can use this function to activate or deactivate TubeClean. If TubeClean is activated, it cleans the IceMaker lines.

Activating TubeClean

Make sure that the following requirements are fulfilled:

❑ IceMaker cleaning is prepared. (see 9.3.4 Cleaning the IceMaker)
❑ Empty container with a capacity of 1.5 l and with a maximum height of 10 cm is ready.

▶ Place the container in the drawer under the IceMaker.



Fig. 57

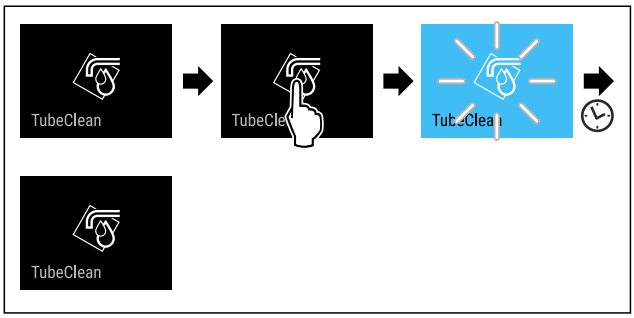

Fig. 58

▶ Carry out action steps according to the illustration.
▷ TubeClean is activated.
▷ The cleaning process has started: Icon flashes until the cleaning process is automatically completed after 60 minutes.
▷ When the cleaning process is complete: The device continues to run in normal mode.

Deactivating TubeClean

TubeClean is automatically ended after 60 minutes. However, TubeClean can also be deactivated at any time during the cleaning process:

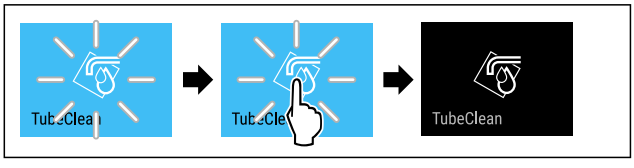

Fig. 59

▶ Carry out action steps according to the illustration.
▷ TubeClean is deactivated: Cleaning process is aborted.
▷ The device continues to run in normal mode.

Display brightness

Use this function to set the display brightness in stages.

You can select the following brightness levels:
- 40 %
- 60 %
- 80 %
- 100 % (pre-setting)

Setting the display brightness



Fig. 60

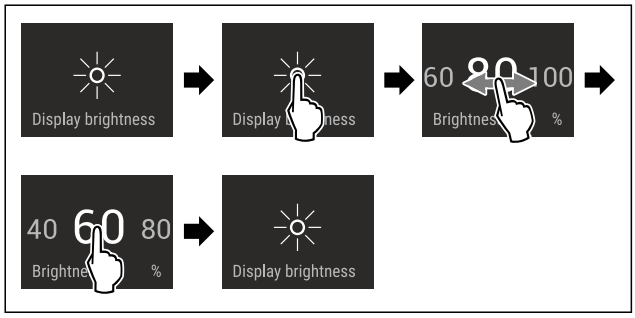

Fig. 61 Example illustration: Switch from 80 % to 60 %.

▶ Carry out action steps according to the illustration.
▷ The display brightness is set.

Door alarm

Use this function to activate or deactivate the door alarm. The door alarm sounds if the door is open for too long. The door alarm is activated on delivery. You can set how long the door may be open before the door alarm sounds.

The following values can be set:
- 1 minute
- 2 minutes
- 3 minutes
- Off

Setting the door alarm



Fig. 62

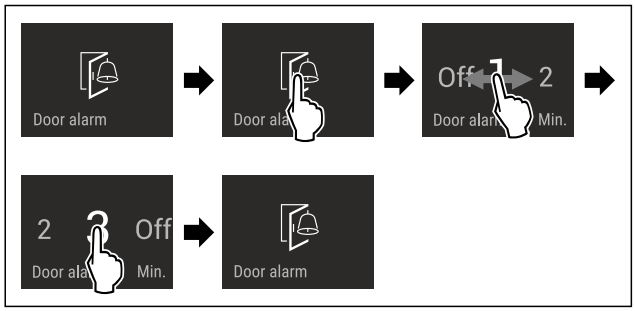

Fig. 63 Example illustration: Change door alarm from 1 minute to 3 minutes.

▶ Carry out action steps according to the illustration.
▷ The door alarm is set.

Deactivating the door alarm



Fig. 65

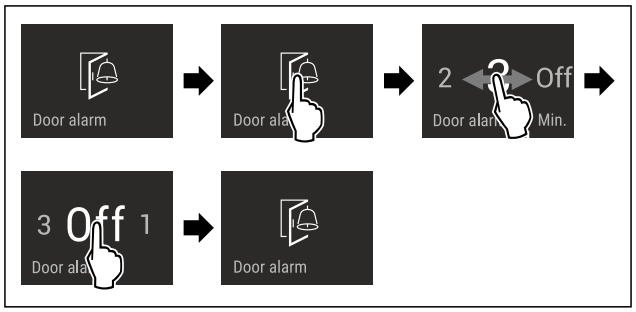

Fig. 66

▶ Carry out action steps according to the illustration.
▷ The door alarm is deactivated.

AutoDoor tone

You can use this function to activate or deactivate the AutoDoor tone. The AutoDoor tone is activated on delivery.

Activating the AutoDoor tone



Fig. 67

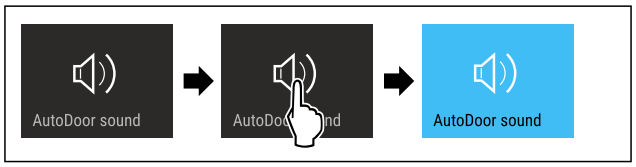

Fig. 68

▶ Carry out action steps according to the illustration.
▷ AutoDoor tone is activated.

Deactivating the AutoDoor tone



Fig. 69

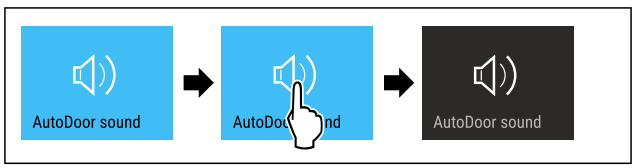

Fig. 70

▶ Carry out action steps according to the illustration.
▷ AutoDoor tone is deactivated.

Input lock

You can use this function to activate or deactivate the input lock. The input lock prevents the appliance being operated accidentally, e.g. by children.

Application:
- Avoid unintentional modification of functions.

*** Depending on model and options**

- Avoid unintentional switching off of the device.
- Avoid unintentional temperature setting.

Activating the input lock

If you activate the input lock, you can continue to navigate in the menus but you cannot select or change other functions.



Fig. 71

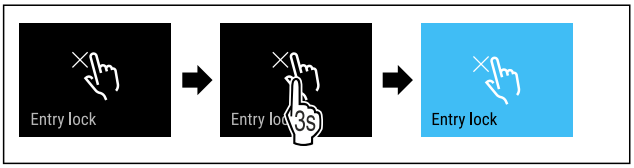

Fig. 72

▶ Carry out action steps according to the illustration.
▷ Input lock is activated.

Deactivating the input lock



Fig. 73

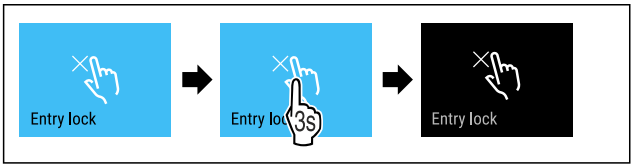

Fig. 74

▶ Carry out action steps according to the illustration.
▷ Input lock is deactivated.

Language

Use this function to set the display language.

You can select the following languages:

- Deutsch
- English
- Français
- Español
- Italiano
- Nederlands
- Čeština
- Polski
- Português
- Русский
- 温度单位

Setting the language



Fig. 75

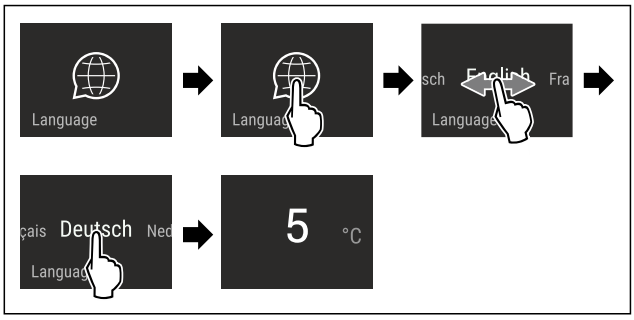

Fig. 76 Example illustration depending on the language and temperature

▶ Carry out action steps according to the illustration.
▷ The language is set.
▷ The display returns to the status display.

Device information

Use this function to indicate the model name, index, serial number and service number of your device. You will need the device information when you contact customer service. (see 10.4 Customer Service)

This function also opens the Advanced menu. (see 3 Functionality of the Touch & Swipe display)

Indicating the device information



Fig. 77



Fig. 78

▶ Carry out action steps according to the illustration.
▷ Display indicates device information.

Software

Use this function to indicate the software version of your device.

Indicating the software version



Fig. 79

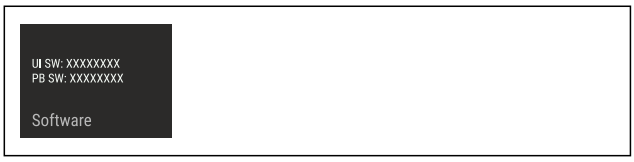

Fig. 80

▶ Carry out action steps according to the illustration.
▷ Display indicates software version.

Reminder

Reminders are given out acoustically by a beep and visually by a symbol in the display. The signal gets louder until the alert stops.

Activating the setting

▶ Activating/deactivating .

Demo mode

Demo mode is a special feature for dealers who want to demonstrate appliance features. If you activate demo mode, all refrigeration functions are deactivated.

If you switch on your appliance and “Demo” appears in the status display, then demo mode is already activated.

If you activate and then deactivate demo mode, the appliance will be reset to factory defaults. (see Resetting to factory settings)

Activating demo mode



Fig. 81

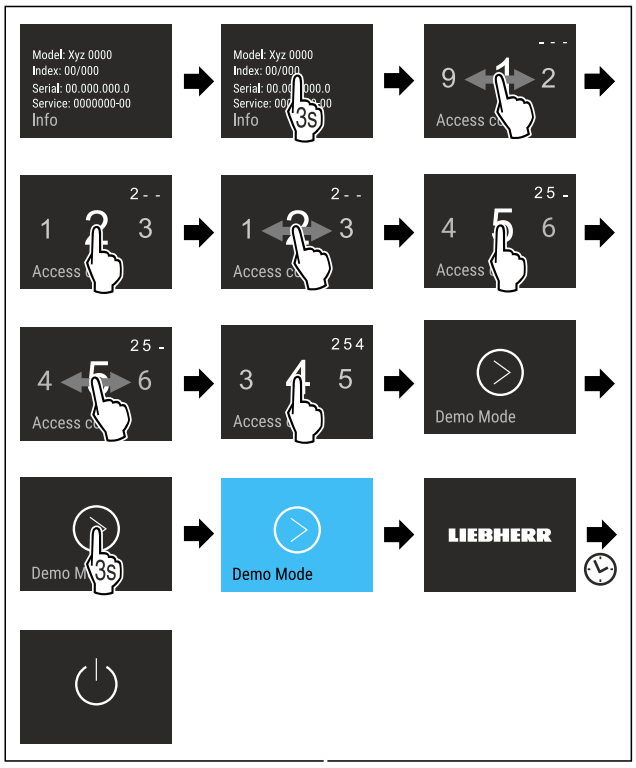

Fig. 82

▶ Carry out action steps according to the illustration.
▷ Demo mode is activated.
▷ Appliance is switched off.
▶ Switch on the appliance. (see 4.1 Switching on appliance (first use))
▷ “DEMO” appears in the status display.

Deactivating demo mode



Fig. 83

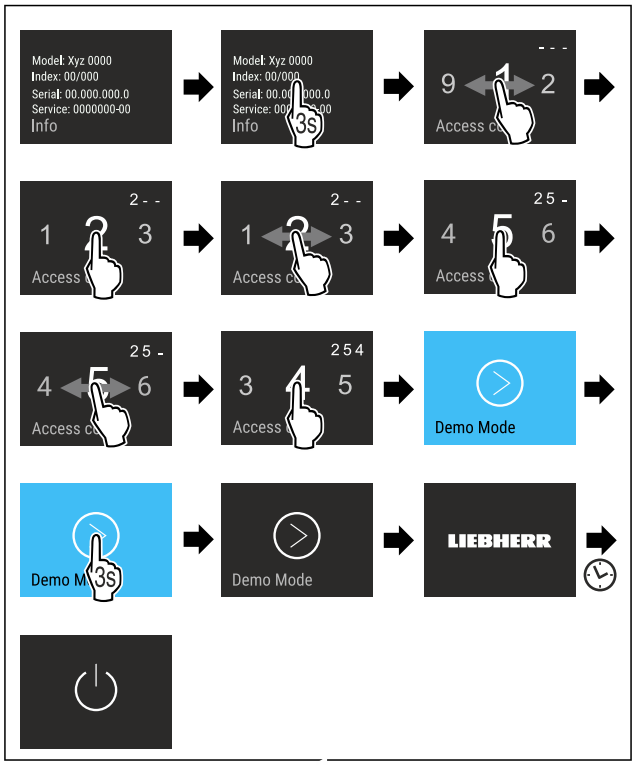

Fig. 84

▶ Carry out action steps according to the illustration.
▷ Demo mode is deactivated.
▷ Appliance is switched off.
▶ Switch on the appliance. (see 4.1 Switching on appliance (first use))
▷ Appliance is reset to factory settings.

Resetting to factory settings

Use this function to reset all settings to factory defaults. All settings you have made so far are reset to their original settings.

Performing a reset



Fig. 85

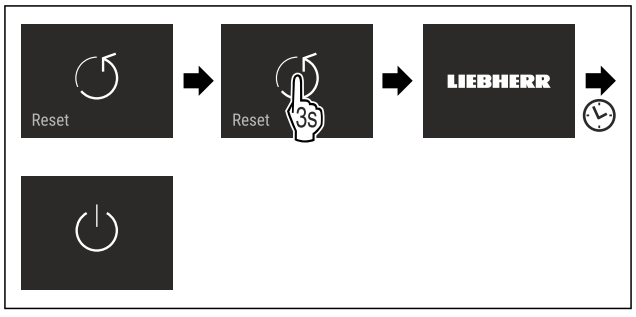

Fig. 86

▶ Carry out action steps according to the illustration.
▷ Device is reset.
▷ Device is switched off.
▶ Restart the device. (see 4.1 Switching on appliance (first use))

7.3 Fault messages

Fault messages appear in the display. There are two categories of fault message:

Category	Meaning
Message	Reminder of general procedures. You can carry out these procedures to eliminate the message.
Warning	Appears when there are malfunctions. A signal sounds in addition to the display. The signal becomes louder until you acknowledge by tapping the display. You can eliminate simple defects yourself. For more serious defects, you must contact customer service.

7.3.1 Warnings



Close the door

This message appears if the door is open for too long.

You can set how long it takes for this message to appear .

▶ Stop alarm: Confirm the message.

-or-

▶ Close the door.



Power cut

This message appears if the freezer temperature increased due to a power cut. After the power is restored, the appliance continues to work at the set temperature.

▶ Stop alarm: Confirm the message.

▷ Temperature alert appears (see Temperature alarm) .



Temperature alarm

This message appears if the temperature does not match the set temperature.

Variations in temperature could be because:

- Hot, fresh food was inserted.
- Too much warm room air flowed in when rearranging and removing food.
- The power was cut off for a while.
- The appliance is faulty.

When the fault is eliminated the appliance continues to work at the set temperature.

▶ Confirm the display.

▷ The highest temperature is shown.

▶ Confirm display again.

▷ The status display is displayed.

▷ The current temperature is shown.



Error

This message appears if there is a fault with the appliance. An appliance component indicates a fault.

▶ Open the door.

▶ Note down the fault code.

▶ Confirm the message.

▷ The signal tone stops.

▷ The status display appears.

▶ Close the door.

▶ Contact customer service. (see 10.4 Customer Service)



AutoDoor

The AutoDoor warning appears in the display:

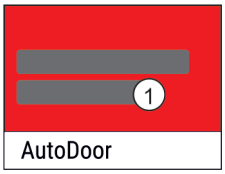

Fig. 87

(1) Warning in the display

Warning in the display	Remedy
AutoDoor has been stopped.	Remove obstacle.
Position could not be saved.	The door opening angle must be more than 70°. (see Changing the door opening angle)
Reference run was not successful.	The reference run must be repeated.
Motor is cooling down. Active again shortly.	Close the door manually.

7.3.2 Message



AutoDoor closing soon

This message appears if the door is open for too long. The door closes automatically after 10 seconds. At the same time, the display pulsates and a signal sounds.

If you need more time before it closes:

▶ Tap the display.

▷ Automatic door closing is interrupted.

▷ The status display appears.

▷ The light stops pulsating.

▷ The door alarm is active.

▷ When the counter runs out: The display pulsates again.

▷ The signal sounds.

▷ The door is automatically closed.



Insert IceMaker drawer

This message appears if the IceMaker drawer is open.

▶ Push in the IceMaker drawer.

▷ The message disappears.

▷ The IceMaker produces ice cubes.

8 Features

8.1 Drawers

You can remove the drawers for cleaning.

You can remove the drawers to use VarioSpace.

The way to remove/insert the drawers varies depending on the pull-out system. Your appliance can contain various pull-out systems.

Note

The energy consumption increases and the cooling power goes down if ventilation is not sufficient.

▶ Leave the bottom drawer in the appliance!

▶ Always leave the fan air vents clear on the back wall!

8.1.1 Drawer on appliance base or glass shelf

The drawer runs directly on the appliance base or on a glass shelf. There are no rails.

When you remove the drawers, you can use the glass shelves below them as storage shelves.

Removing drawer

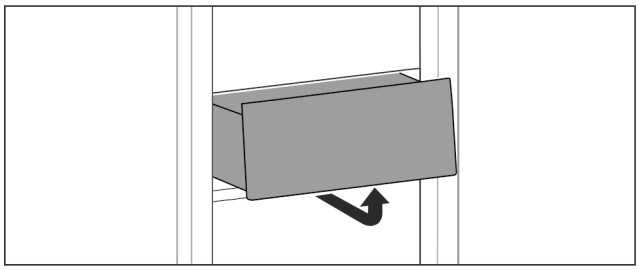

Fig. 88

▶ Remove drawer as shown in the illustration.

Inserting drawer

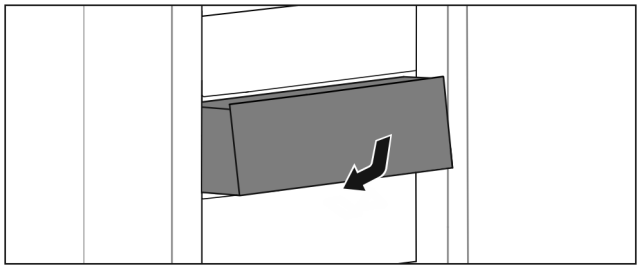

Fig. 89

▶ Insert drawer as shown in the illustration.

8.1.2 Drawer on telescopic rails

The drawer runs on extendible rails (telescopic rails). There are fully extendible telescopic rails and telescopic rails with partial pull-out. Drawers which are fully extendible can be pulled out fully from the appliance. Drawers with partial pull-out cannot be removed fully from the appliance. The system in your appliance depends on the type of appliance.

Drawer on glass shelf

The drawer guided on a glass shelf is a partial pull-out.

Removing drawer

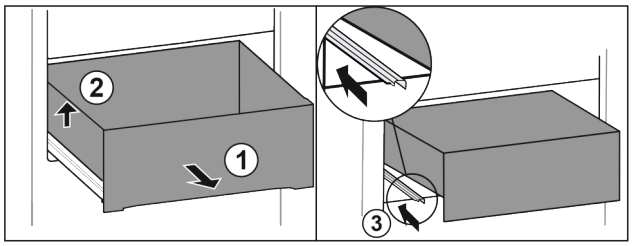

Fig. 90

▶ Pull out drawer as far as it will go. *Fig. 90 (1)*
▶ Lift drawer on the left. *Fig. 90 (2)*
▶ Insert left rail. *Fig. 90 (3)*

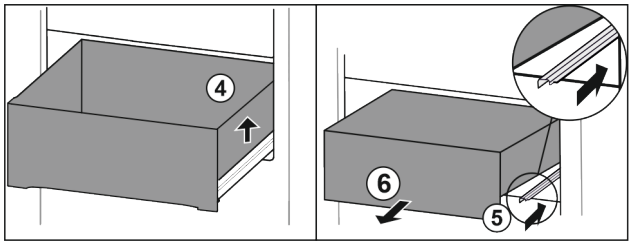

Fig. 91

▶ Lift drawer on the right. *Fig. 91 (4)*
▶ Insert right rail. *Fig. 91 (5)*
▶ Remove drawer to the front. *Fig. 91 (6)*

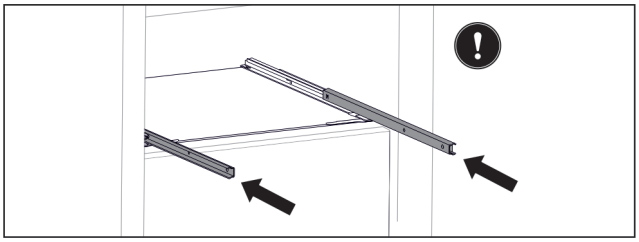

Fig. 92

If the rails are not yet fully inserted after removing the drawer:

▶ Push rails in completely.

Inserting drawer

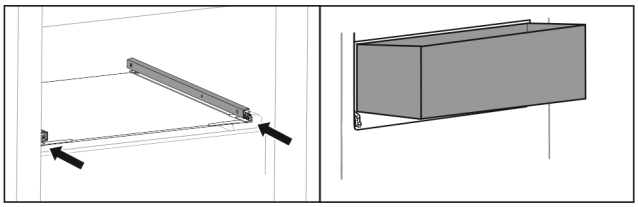

Fig. 93

▶ Slide rails in.
▶ Place drawer on rails at an angle.

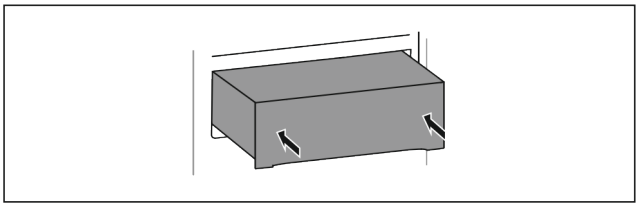

Fig. 94

▶ Lower drawer.
▶ Slide in drawer to the back.

8.1.3 Top tilting drawer

When you pull out the top drawer, it tilts forward. This gives you a better view into the drawer. The function depends on the height of the appliance.

When you remove the tilting drawers, you can use the glass shelf below them as a storage shelf.

Removing drawer

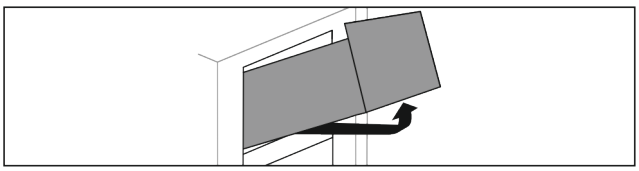

Fig. 95

▶ Pull out drawer as far as it will go.
▶ Lift drawer up at the front and at the same time push up at the back from below.
▶ Remove drawer to the front.

Inserting drawer

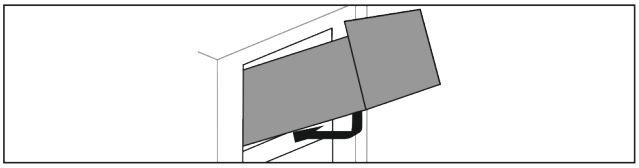

Fig. 96

▶ Position drawer as shown.
▷ The drawer rests on the glass panel.
▶ Lift drawer slightly from below at the back and slide over the lip.
▶ Slide in drawer to the back.

8.1.4 Drawer on moulded rib

The drawer runs directly on the moulded rib. There are no rails.

Removing drawer

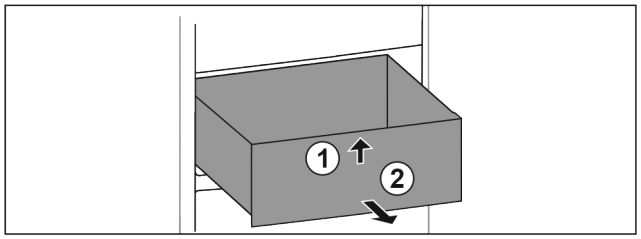

Fig. 97

▶ Pull out drawer as far as it will go.
▶ Lift up drawer at the front. *Fig. 97 (1)*
▶ Remove drawer to the front. *Fig. 97 (2)*

Inserting drawer

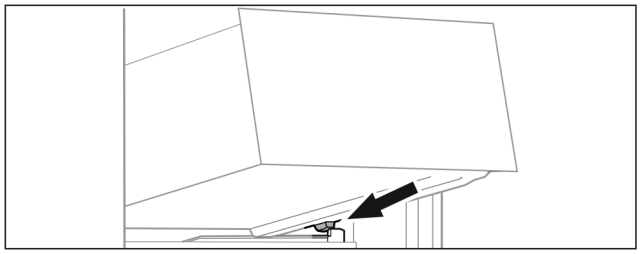

Fig. 98

▶ Place drawer at an angle behind the stoppers on the moulded rib. (see Fig. 98)
▶ Lower drawer.
▶ Slide in drawer to the back.

8.2 Pull-out board with IceTower

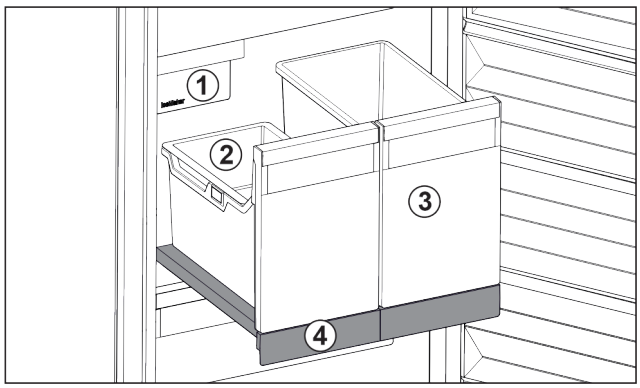

Fig. 99 Pull-out board with IceTower

(1) IceMaker
(2) Hang-on tray for ice cubes
(3) Container for pizza or alcoholic beverages, for example
(4) Pull-out board

There are two high (IceTower) containers on the pull-out board. Ice cubes from the IceMaker are collected and stored in the *Fig. 99 (2)* container. The container *Fig. 99 (3)* is suitable for storing tall foodstuffs or beverages such as pizzas or alcoholic drinks.

The pull-out board with IceTower is mounted on a glass shelf with pull-out rails. You can dismantle the pull-out board for cleaning.

8.2.1 Dismantling the pull-out board with IceTower

Removing the container

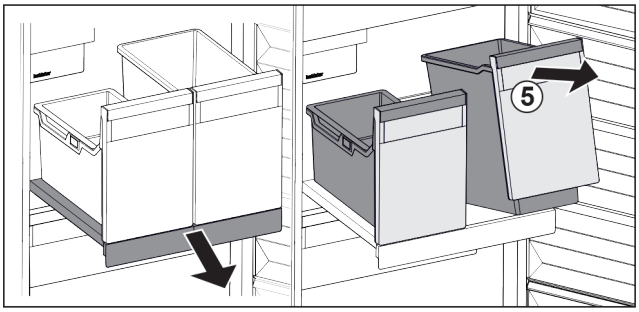

Fig. 100

▶ Pull out the pull-out board.
▶ Lift the container *Fig. 100 (5)* at the front.
▶ Remove the container.

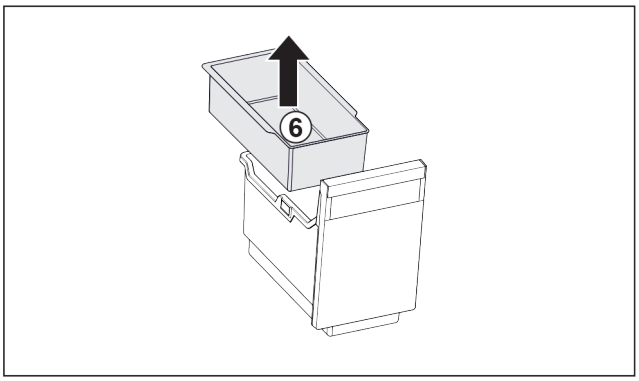

Fig. 101

▶ Remove the hang-on tray *Fig. 101 (6)*.
▶ If there are ice cubes in the hang-on tray: Empty the hang-on tray.
▷ The container and hang-on tray have been removed and you can clean them. (see 9.3.3 Clean the components)

Removing the pull-out board

Ensure that the following conditions are met:

❑ Containers have been removed. (see Removing the container)

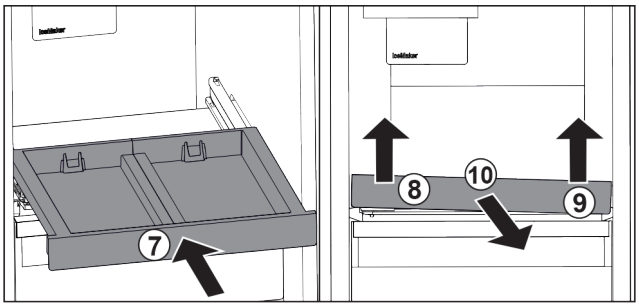

Fig. 102

▶ Slide in the pull-out board. *Fig. 102 (7)*
▶ Lift the pull-out board on the front left. *Fig. 102 (8)*
▶ Lift the pull-out board on the front right. *Fig. 102 (9)*
▷ Pull-out board is detached from the attachment at the front.
▶ Take out the pull-out board to the front. *Fig. 102 (10)*
▷ The pull-out board has been removed and you can clean it. (see 9.3.3 Clean the components)

Removing the glass shelf from under the pull-out board

(see 8.3 Glass shelves)

8.2.2 Inserting the pull-out board with IceTower

Inserting the glass shelf from under the pull-out board

(see 8.3 Glass shelves)

Inserting the pull-out board

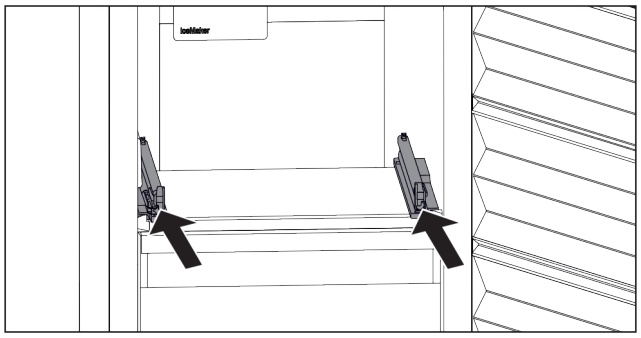

Fig. 103

▶ Slide the rails in.

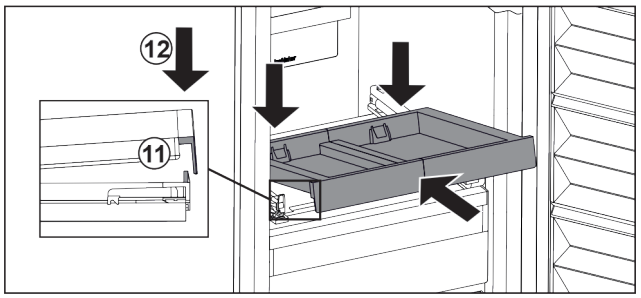

Fig. 104

▶ Place the pull-out board in at an angle behind the front lug.
▶ Slide in at an angle. Make sure that the stop is behind the lug on both sides. *Fig. 104 (11)*
▶ Lower the pull-out board at the front. *Fig. 104 (12)*

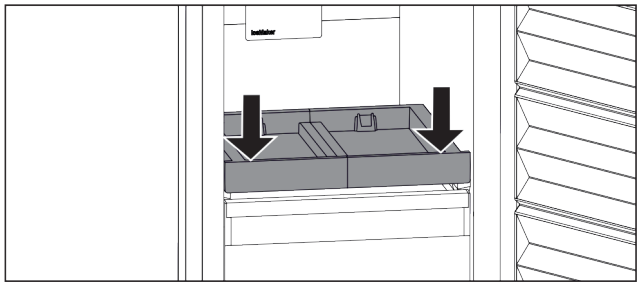

Fig. 105

▶ Push the pull-out board down at the front.
▷ Pull-out board clicks into place.

Inserting the container

Ensure that the following conditions are met:

❑ The pull-out board is inserted. (see Inserting the pull-out board)

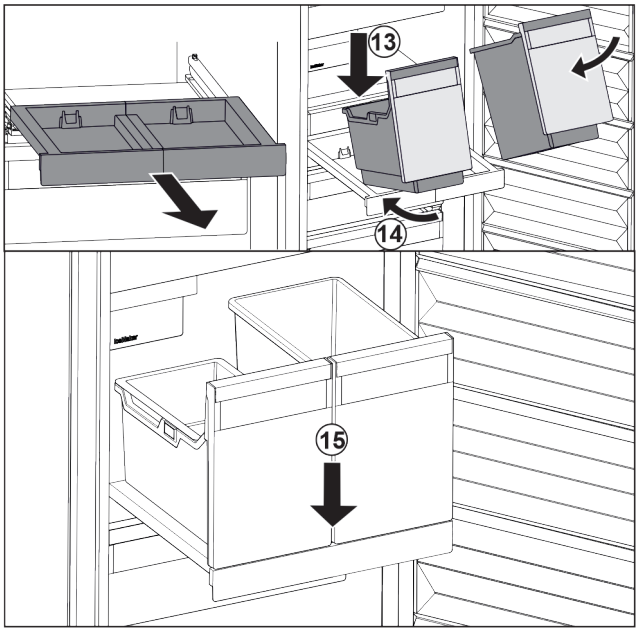

Fig. 106

▶ Pull out the pull-out board.
▶ Hold the pull-out board with one hand.

Note

The containers are shaped in a way that they cannot be interchanged.

▶ Place the container at an angle on the pull-out board. *Fig. 106 (13)*
▶ Slide the container to the back at an angle. *Fig. 106 (14)*
▶ Place container in the front. *Fig. 106 (15)*

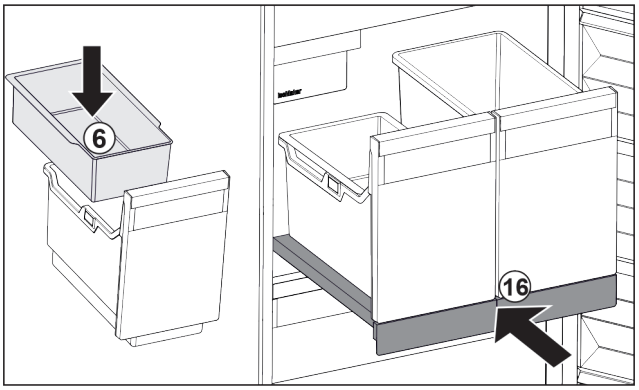

Fig. 107

▶ Insert hang-on tray *Fig. 107 (6)* for ice cubes.
▶ Slide in the pull-out board with (IceTower) container. *Fig. 107 (16)*
▷ Pull-out shelf with IceTower is fully inserted.

8.3 Glass shelves

NOTICE

Impermissible removal of the glass panel above the IceTower!

Damage to the IceMaker. The IceMaker is attached to the glass panel above the IceTower.

▶ Do not remove the glass panel above the IceTower.

You can remove the glass shelves under the drawers for cleaning.

You can remove the glass shelves under the drawers to use VarioSpace.

8.3.1 Removing / inserting the glass shelf under the tilting drawer

The glass shelf is located under the top tilting drawer.

Make sure that the following requirements are fulfilled:

❑ Drawer has been removed. (see 8.1.3 Top tilting drawer)

Removing glass shelf

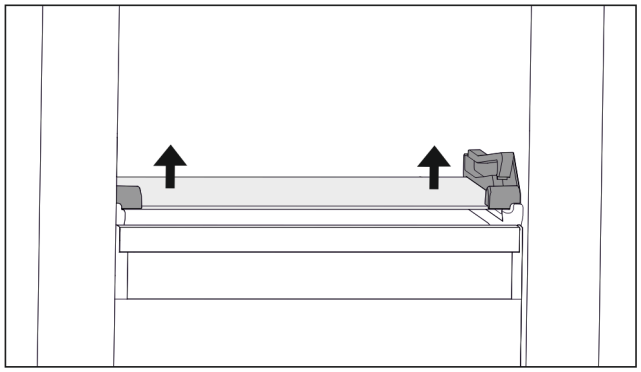

Fig. 108 Tilting drawer glass shelf

▶ Push glass shelf upwards from below on both sides. (see Fig. 108)
▶ Take out the glass shelf to the front.

Inserting glass shelf

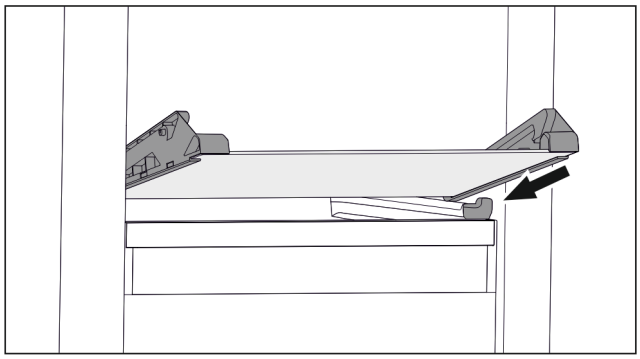

Fig. 109 Tilting drawer glass shelf

▶ Position glass shelf at an angle behind the stoppers. (see Fig. 109)
▶ Lower glass shelf.
▶ Slide in glass shelf to the back.
▷ Glass shelf clicks into place.

8.3.2 Removing / inserting the glass shelf

Depending on the equipment, the glass shelf may be located under the drawer.

Depending on the equipment, the glass shelf may be located under the IceTower.

Make sure that the following requirements are fulfilled:

❑ Glass shelf under the drawer: The drawer has been removed. (see 8.1 Drawers)
❑ Pull-out board under IceTower: IceTower has been removed. (see 8.2 Pull-out board with IceTower)

Removing glass shelf

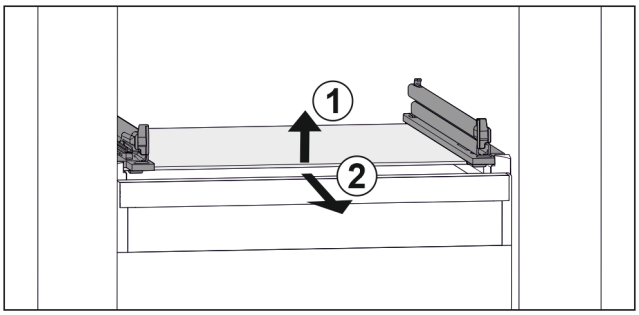

Fig. 110 Example illustration of glass shelf

▶ Lift glass shelf at the front. *Fig. 110 (1)*
▶ Take out glass shelf to the front. *Fig. 110 (2)*

Inserting glass shelf

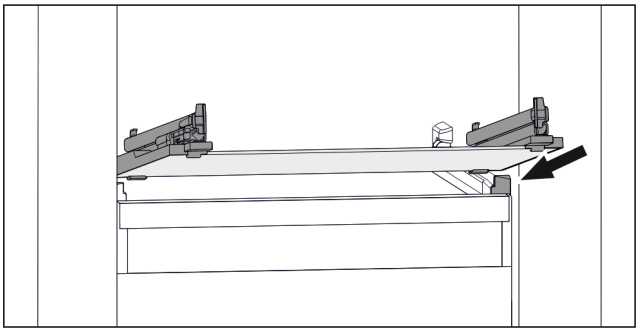

Fig. 111 Example illustration of glass shelf

▶ Position glass shelf at an angle behind the stoppers. (see Fig. 111)
▶ Lower glass shelf.
▶ Slide in glass shelf to the back.

8.4 IceMaker

The IceMaker will produce ice cubes for household use only.

Ensure that the following conditions are met:

- IceMaker is cleaned (see 9 Maintenance) .
- IceMaker drawer is cleaned.
- IceMaker drawer is fully inserted.

8.4.1 Producing ice cubes

The volume depends on the freezing temperature. The colder the temperature, the more ice cubes the system can produce in a certain time period.

After the IceMaker is turned on for the first time, it can take up to 24 hours for the first ice cubes to be made.

▶ Activate the IceMaker function .
▶ To make a high number of ice cubes: Activate the MaxIce function .
▶ To make a high number of ice cubes: Move the divider in the IceMaker drawer or remove it completely.
▶ Distribute the ice cubes evenly in the drawer to increase the capacity.
▶ Closing the drawer: IceMaker starts making ice cubes again automatically.

Note
When a certain level is reached in the IceMaker drawer, it stops producing ice cubes. The IceMaker does not fill the drawer all the way to the top.

8.5 VarioSpace

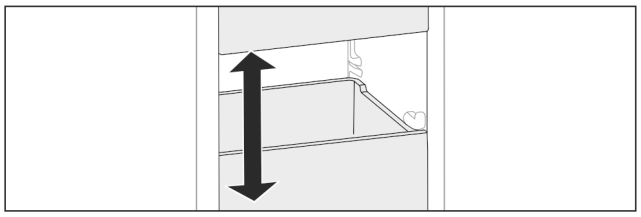

Fig. 112

You can remove drawers and glass panels from your appliance. This provides more room for large food items such as poultry, joints of meat, large game, and tall baked products. You can then freeze these items whole for later preparation.

▶ Note the weight limits on the drawers and glass panels (see 10.1 Technical specifications) .

8.6 Freezer pack

Freezer packs prevent the temperature rising too quickly should there be a power cut.

The freezer packs are in the drawer.

You can store the freezer packs in the freezer tray.

8.6.1 Using the freezer pack

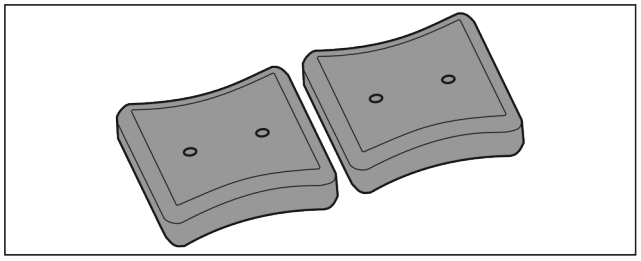

Fig. 113

When the freezer packs are fully frozen:

▶ Place on the frozen goods in the top, front part of the freezer.

8.7 Flexible ice compartment divider

The IceMaker's ice cube drawer has a flexible ice compartment divider. This allows you to store larger quantities of ice cubes or additional food items as needed. You can move or remove the ice compartment divider.

8.7.1 Moving in the flexible ice compartment divider

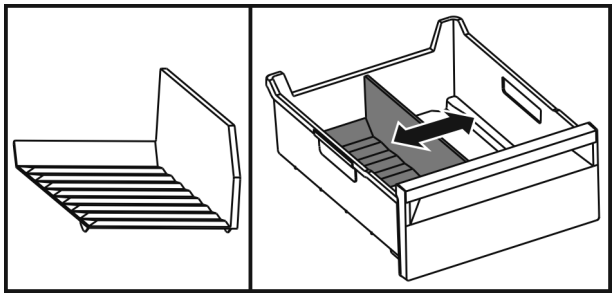

Fig. 114 Example illustration of the ice compartment divider

▶ Move the ice compartment divider to the desired position.

8.7.2 Removing the flexible ice compartment divider

Make sure that the following requirements are fulfilled:

❑ Ice cube drawer is removed. (see 8.1 Drawers)

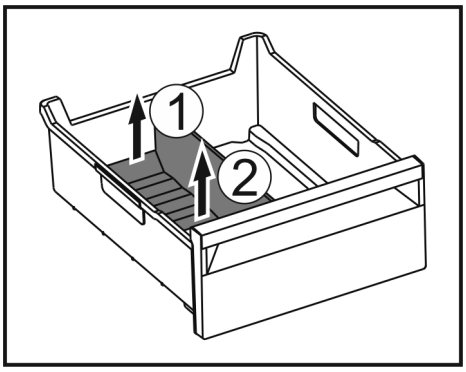

Fig. 115

▶ Lift the rear part of the ice compartment divider. *Fig. 115 (1)*

▶ Remove the ice compartment divider upwards. *Fig. 115 (2)*

8.7.3 Putting in the flexible ice compartment divider

Make sure that the following requirements are fulfilled:

❑ Ice cube drawer is removed. (see 8.1 Drawers)

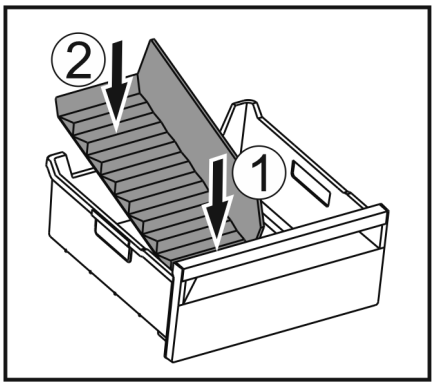

Fig. 116

▶ Insert the front part of the ice compartment divider. *Fig. 116 (1)*

▶ Lower the rear part of the ice compartment divider to the drawer bottom. *Fig. 116 (2)*

9 Maintenance

9.1 Disassembling / assembling pull-out systems

9.1.1 Notes on disassembly

You can disassemble some of the pull-out systems for cleaning. Your appliance can contain a variety of pull-out systems.

The following pull-out systems can be disassembled or cannot be disassembled:

Pull-out system	can be disassembled / cannot be disassembled
Drawer on appliance base or glass shelf	cannot be disassembled
Drawer on glass shelf	can be disassembled (see Drawer on glass shelf)
Top tilting drawer	can be disassembled (see 9.1.3 Top tilting drawer)
Drawer on moulded rib	can be disassembled (see 9.1.4 Drawer on moulded rib)
IceTower	can be disassembled (see 9.1.5 IceTower)

9.1.2 Drawer on telescopic rails

Drawer on glass shelf

Disassembling pull-out system

Make sure the following prerequisites are met:

❑ Drawer has been removed.

❑ Glass shelf has been removed. (see 8.3 Glass shelves)

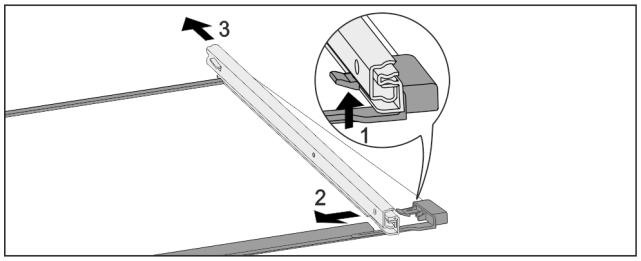

Fig. 117 Glass shelf with rails

▶ Push up front click-in hooks. *(1)*

▶ Move pull-out rails to the side *(2)* and to the rear *(3)*.

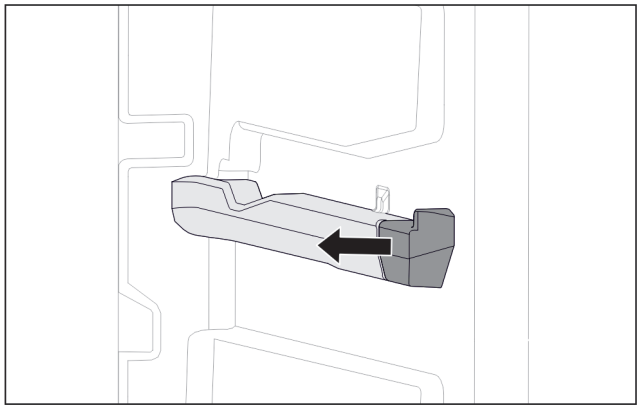

Fig. 118 Attachment on the right moulded rib

▶ Remove moulded rib attachment sideways.

Installing pull-out system

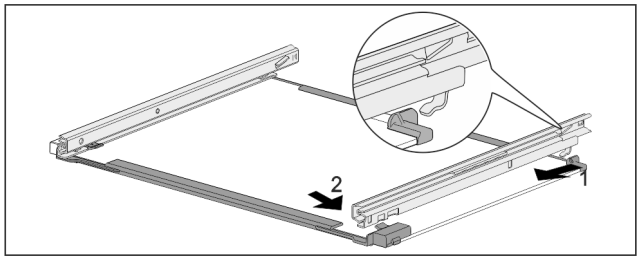

Fig. 119 Glass shelf with rails

▶ Hook in rail at the back. *(1)*

▶ Hook in rail at the front. *(2)*

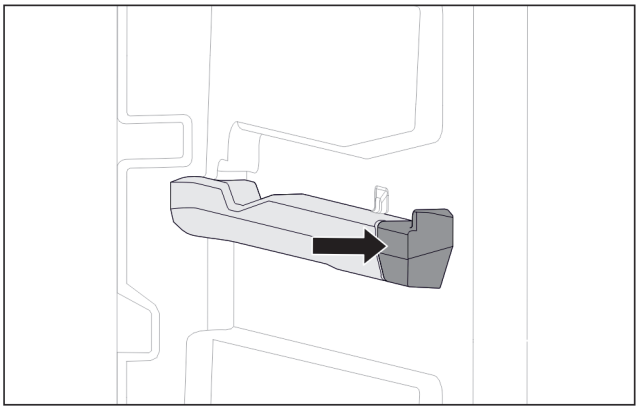

Fig. 120 Attachment on the right moulded rib

▶ Press attachment onto moulded rib.

9.1.3 Top tilting drawer

Disassembling pull-out system

Make sure the following prerequisites are met:

❑ Drawer has been removed. (see 8.1.3 Top tilting drawer)

❑ Glass shelf has been removed. (see 8.3 Glass shelves)

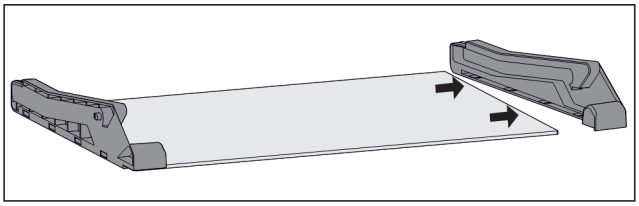

Fig. 121 Glass shelf with side parts

▶ Pull off side part from glass shelf sideways.

Installing pull-out system

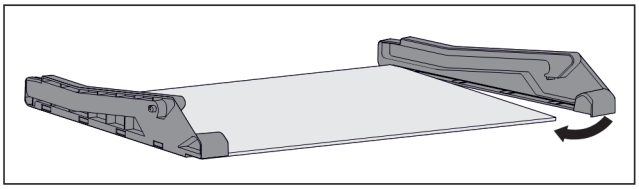

Fig. 122 Glass shelf with side parts

▶ Place on side part at the back.

▶ Press side part onto glass shelf at the front.

9.1.4 Drawer on moulded rib

Disassembling pull-out system

Make sure the following prerequisites are met:

❑ Drawer has been removed. (see 8.1.4 Drawer on moulded rib)

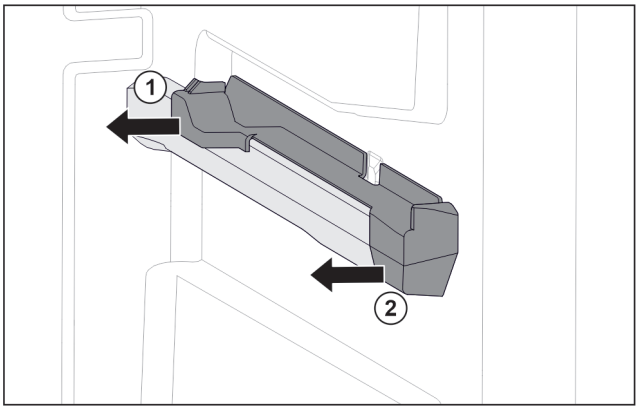

Fig. 123 Attachment on the right moulded rib

▶ Grab attachment at the back from below.

▶ Pull off attachment at the back sideways. *Fig. 123 (1)*
▶ Pull off attachment at the front sideways. *Fig. 123 (2)*

Installing pull-out system

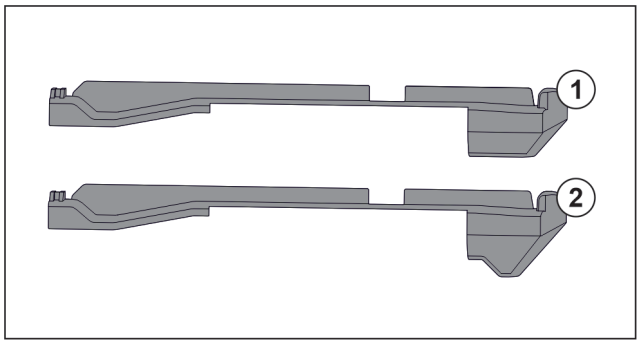

Fig. 124 Comparing attachments

There are two different attachments in the appliance. The attachment above the lowest drawer *Fig. 124 (2)* has a three-cornered edge. All other attachments *Fig. 124 (1)* have a straight edge.

▶ Fit attachment *Fig. 124 (2)* with the three-cornered edge above the lowest drawer.
▶ Fit attachment *Fig. 124 (1)* with straight edge in all other positions.

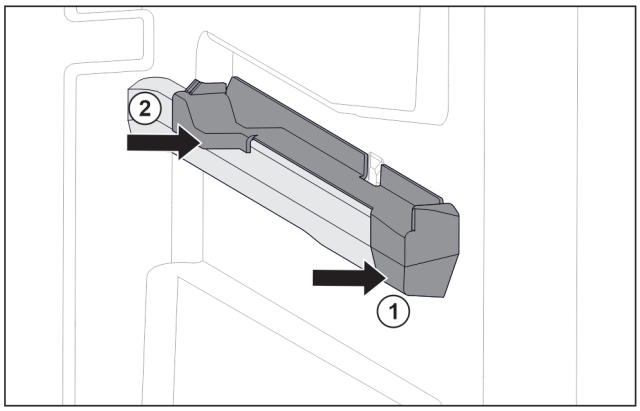

Fig. 125 Attachment on the right moulded rib

▶ Position attachment on moulded rib at the front. *Fig. 125 (1)*
▶ Press on attachment at the back. *Fig. 125 (2)*

9.1.5 IceTower

Disassembling pull-out system

Make sure the following prerequisites are met:

❑ IceTower has been removed. (see 8.2 Pull-out board with IceTower)
❑ Glass shelf has been removed. (see 8.3 Glass shelves)

▶ Place pull-out board on a table.
▷ You are able to remove the rails more easily from the glass shelf.

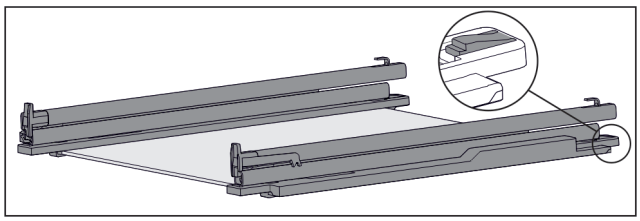

Fig. 126 Glass shelf with rails and retaining parts

▶ Press down retaining part at the rear (see Fig. 126) and at the same time push the rail back.

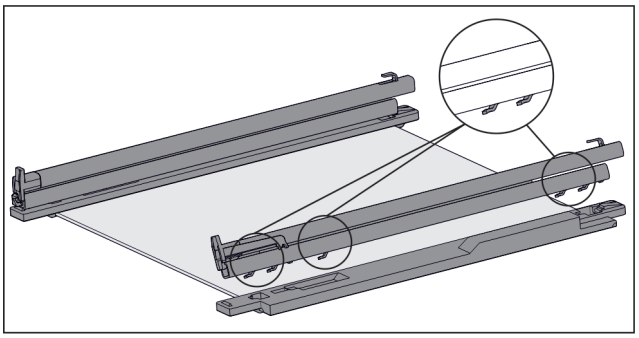

Fig. 127 Glass shelf with rails and retaining parts

▷ The rail hooks are released from the retaining part.
▶ Remove rail from retaining part.

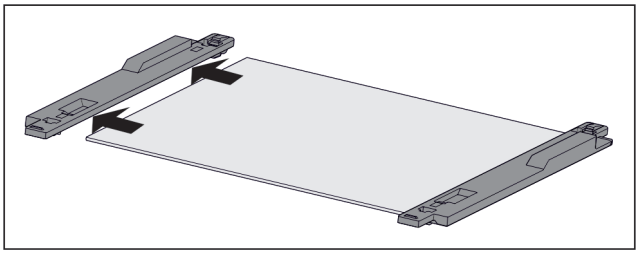

Fig. 128 Glass shelf with retaining part

▶ Remove retaining part from glass shelf sideways.

Installing pull-out system

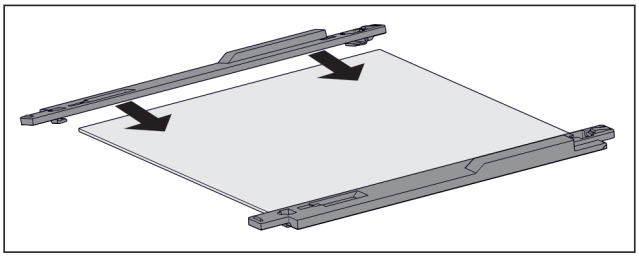

Fig. 129 Glass shelf with retaining part

▶ Fit retaining part on glass shelf.
▶ Push retaining part onto glass shelf as far as it will go.

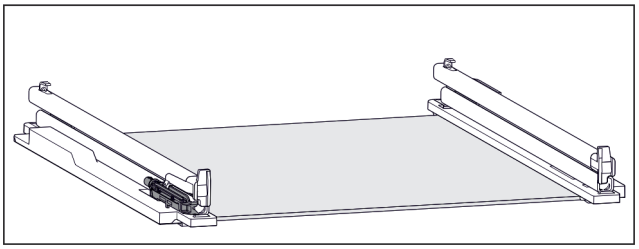

Fig. 130 Damping mechanism

The damping mechanism is attached to the left rail. (see Fig. 130) There is no damping mechanism attached to the right rail.

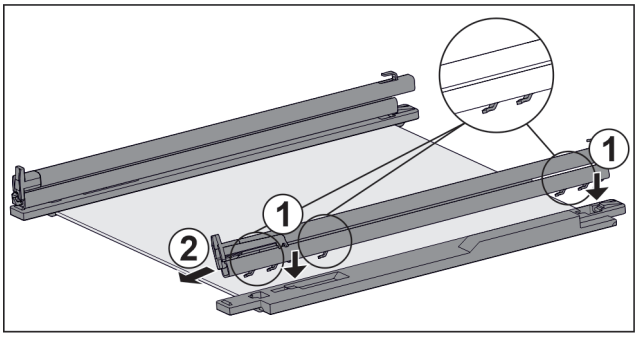

Fig. 131 Glass shelf with rails and retaining parts

Install rail **with** damping mechanism:

▶ Place rail hooks onto the openings of the **left** retaining part. *Fig. 131 (1)*
▶ Push rail forwards. *Fig. 131 (2)*
▷ Rail latches in audibly.
Install rail **without** damping mechanism:
▶ Place rail hooks onto the openings of the **right** retaining part. *Fig. 131 (1)*
▶ Push rail forwards. *Fig. 131 (2)*
▷ Rail latches in audibly.

9.2 Defrosting the appliance

9.2.1 Defrosting with NoFrost

Defrosting is performed automatically with the NoFrost system. The moisture is deposited on the evaporator, is periodically defrosted and evaporates.

The appliance does not need to be defrosted.

9.3 Cleaning the appliance

9.3.1 Ready

WARNING
Danger of electric shock!
▶ Remove the refrigerator connector or interrupt the power supply.

WARNING
Risk of fire
▶ Do not damage the refrigeration circuit.

▶ Empty the appliance.
▶ Remove mains connector.

9.3.2 Cleaning the interior

NOTICE
Improper cleaning!
Damage to the appliance.
▶ Only use soft cleaning cloths and ph-neutral all-purpose cleaners.
▶ Do not uses abrasive sponges or steel wool which may cause scratches.
▶ Do not use any sharp or abrasive cleaning agents, nor any that contain sand, chloride or acid.

▶ Plastic surfaces: clean by hand with a soft clean cloth, lukewarm water and a little detergent.
▶ Metal surfaces: clean by hand with a soft clean cloth, lukewarm water and a little detergent.

9.3.3 Clean the components

NOTICE
Improper cleaning!
Damage to the appliance.
▶ Only use soft cleaning cloths and ph-neutral all-purpose cleaners.
▶ Do not uses abrasive sponges or steel wool which may cause scratches.
▶ Do not use any sharp or abrasive cleaning agents, nor any that contain sand, chloride or acid.

Clean with a soft, clean cloth, lukewarm water and some detergent:

- IceTower pull-out board
- Drawer
  Please note: Do not remove the magnet on the drawer. The magnet ensures the functionality of the IceMaker.
- Divider in the IceMaker drawer
- Freezer tray

Clean with a damp cloth:

- Retractable rails
  Please note: The grease in the tracks is used for lubrication and must not be removed!

Wash in the dishwasher up to 60 °C:

- Ice cube scoop

▶ To disassemble components: see the relevant section.
▶ Clean the components.

9.3.4 Cleaning the IceMaker

There are various options for cleaning the IceMaker.

Cleaning is required in the following cases:

❑ Initial operation
❑ With mains connection:
If out of use for more than 5 days.

Ensure that the following conditions are met:

❑ IceMaker drawer is emptied.
❑ IceMaker drawer is in place.
❑ The IceMaker is activated.

First use or after a long period of non-use

Clean the IceMaker with the TubeClean function.
▶ Put an empty 1.5 l vessel (max. height 10 cm) in the drawer under the IceMaker.
▶ Activate the TubeClean function.
▷ The rinse process is prepared (max. 60 min.): Symbol flashes.
▷ Water pipes are rinsed: Symbol flashes.
▷ Rinsing process is complete: Function turns off automatically.
▶ Remove the IceMaker drawer and remove the container.
▶ Clean the IceMaker drawer with warm water and a little detergent.
▶ Push the IceMaker drawer in.
▷ The system starts making ice cubes automatically.
▶ Dispose of any ice cubes that were made 24 hours after the first ice cubes.

If cleaning is required

Clean the IceMaker by hand.
▶ Remove the IceMaker drawer and clean with warm water and a little detergent.
▶ Push the IceMaker drawer in.
▷ The system starts making ice cubes automatically.

9.3.5 After cleaning

▶ Wipe the appliance and the components dry.
▶ Connect and switch on the appliance.
▶ Activate SuperFrost (see 7.2 Appliance functions) .
The temperature is cold enough:
▶ Place the food inside.
▶ Repeat cleaning regularly.

10 Customer help

10.1 Technical specifications

Temperature range	
Freeze	-28 °C to -15 °C

Maximum freezing quantity/24 h	
Freezer compartment	See “Freezing capacity .../24 h” on the type plate

Maximum component capacity			
Features	Appliance width 550 mm (see installation instructions, appliance dimensions)	Appliance width 600 mm (see installation instructions, appliance dimensions)	Appliance width 700 mm (see installation instructions, appliance dimensions)
Drawer on glass shelf (see 8.1.1 Drawer on appliance base or glass shelf)	12 kg	15 kg	--
Drawer on moulded rib (see 8.1.4 Drawer on moulded rib)	14 kg	19 kg	19 kg
Drawer on glass shelf (see 8.1.2 Drawer on telescopic rails)	12 kg	15 kg	22 kg

Ice cube production with IceMaker	
Ice cube production/24 h	At a temperature of -18 °C: 0.8 kg of ice cubes
Maximum ice cube production/24 h	With the MaxIce function on: 1.2 kg of ice cubes

Lighting	
Class[1]	Light source
This product contains one or more energy efficiency class G light sources.	LED

[1] *The appliance may contain light sources with different energy efficiency classes. The lowest energy efficiency class is indicated.*

For appliances with a WiFi connection:

Frequency specification	
Frequency band	2.4 GHz
Maximum radiated power	< 100 mW
Purpose of the wireless equipment	Integration in the local WiFi network for data communication

10.2 Operating noises

The appliance makes different noises when it is on.

- At **higher temperatures** the appliance uses less energy but works for longer. It is **quieter**.
- At **lower temperatures** the food is cooled faster. It is **louder**.

Examples:

- Functions on (see 7.2 Appliance functions)
- Fan running
- Food recently added
- High ambient temperature
- Door open for a while

Noise	Possible cause	Type of noise
Bubbling and splashing	Coolant flowing into the cooling circuit.	Normal operating noise
Hissing	Coolant sprays into the cooling circuit.	Normal operating noise
Humming	The appliance is cooling. The volume depends on the cooling output.	Normal operating noise
Suction noises	Soft-closing door is being opened and closed.	Normal operating noise
Humming and rustling	The fan is running.	Normal operating noise
Clicking	Components are switched on and off.	Normal switching noise
Rattling or humming	Valves or flaps are working.	Normal switching noise

Noise	Possible cause	Type of noise	Lifting
Vibration	Improper installation	Defective noise	Check the installation. Level the appliance.
Rattling	Components, items inside the appliance	Defective noise	Secure components. Leave enough space between the items.

10.3 Technical fault

Your appliance is designed and built to ensure it works reliably and has a long service life. In the unlikely event that a fault occurs during operation, please check whether it is due to an operating error. If so, you will be charged for the callout and repair costs even if it falls within the warranty period.

You can fix the following faults yourself.

10.3.1 Appliance function

Defect	Cause	Remedy
The appliance is not working.	→ The appliance is not switched on.	▶ Switch the appliance on.
	→ The power plug is not properly plugged into the socket.	▶ Check the power plug.
	→ There is something wrong with the power outlet fuse.	▶ Check the fuse.
	→ Power cut	▶ Keep the appliance closed. ▶ Protecting food: Lay freezer packs on top of the food or use another freezer if the power is off for a prolonged period. ▶ Do not re-freeze defrosted food,
	→ The appliance plug does not fit the appliance properly.	▶ Check the appliance plug.
Temperature is not cold enough.	→ The appliance door is not closed properly.	▶ Close the appliance door.
	→ Not enough ventilation.	▶ Keep ventilation grille clear, and clean it.
	→ The ambient temperature is too high.	▶ Problem solution: (see 1.5 Appliance range of use)
	→ The appliance was opened too many times or for too long.	▶ Wait to see if the required temperature corrects itself. If not, contact Customer Service. (see 10.4 Customer Service)
	→ Too much fresh food was placed inside without SuperFrost.	▶ Solution: (see SuperFrost)
	→ The temperature is set incorrectly.	▶ Turn down the temperature and check after 24 hours.
	→ The appliance is too close to a heat source (oven, radiator, etc).	▶ Move the appliance or the heat source.
	→ The appliance was not correctly installed in the recess.	▶ Check if the appliance was installed correctly and that the door closes properly.
The door seal is defective or needs to be replaced for another reason.	→ The door seal can be replaced. It can be replaced without the need for special tools.	▶ Contact Customer Service. (see 10.4 Customer Service)
The appliance builds up too much ice or condensation.	→ The door seal may have slipped out of its groove.	▶ Check that the door seal is well fitted in the groove.

10.3.2 Features

Defect	Cause	Remedy
You cannot activate the IceMaker.	→ The appliance and therefore the IceMaker are not connected.	▶ Connect the appliance (see the Installation Guide).
The IceMaker is not producing ice cubes.	→ The IceMaker is not on.	▶ Activate the IceMaker.
	→ The drawer of the IceMakers is not connected properly.	▶ Push the drawer in correctly.
	→ The water connection is not open.	▶ Open the water connection.
The internal light does not come on.	→ The appliance is not switched on.	▶ Switch the appliance on.
	→ The door was open for longer than 15 minutes.	▶ Interior lighting turns off automatically after approx. 15 min. with the door open.

Defect	Cause	Remedy
	→ The LED interior light is faulty or the lid is damaged.	▶ Contact Customer Service. (see 10.4 Customer Service)

AutoDoor FAQ

Defect	Cause	Remedy
The door opens at a different speed.	→ The speed of the door depends on how much is stored in it.	▶ No action is required.
The door jams or does not open smoothly.	→ A vacuum is created if you open the door too many times quickly in succession.	▶ Wait a while or open the door manually.
The motor stops and the door does not close.	→ There are objects blocking the door.	▶ Remove the objects. ▶ Push the drawers all the way in. ▶ Wait a while. ▶ Move the door manually.
	→ The mechanism is blocked.	▶ To avoid damaging the hinge: Do not move the door against the motor. ▶ Contact Customer Service. (see 10.4.1 Contacting Customer Service)
	→ The motor is overheated.	▶ Let the motor cool down. ▶ Wait a while. ▶ Move the door manually.
The door opening angle cannot be saved.	→ The selected door opening angle is too small.	▶ Set a different door opening angle: Select a door opening angle of at least 70°. Liebherr recommends at least 90°, so that you can easily pull out the drawers. (see Auto-Door)
The door does not respond to knocking.	→ You are not knocking hard enough.	▶ Increase the sensitivity of the knocking sensor. The knocking sensor is on the hinge side on the narrow side of the door. (see the installation instructions)
	→ The knocking function is not activated.	▶ Activate the AutoDoor function. (see AutoDoor)
The door does not close by voice command.	→ The voice assistant is not set up.	▶ Set up the voice assistant. (see AutoDoor)
	→ You can find detailed information and tutorials at:	▶ home.liebherr.com/faq-autodoor

10.4 Customer Service

First check whether you can rectify the fault yourself (see 10 Customer help) . If you cannot rectify the problem, contact Customer Service.

You can find the address in the enclosed brochure “Liebherr-Service” or at home.liebherr.com/service.

WARNING
Unprofessional repair!
Injuries.
- ▶ Have any repairs and action - not expressly specified - on the appliance and mains cable carried out by service personnel only. (see 9 Maintenance)
- ▶ A damaged mains cable may only be replaced by the manufacturer, the manufacturer’s Customer Service or a similarly qualified person.
- ▶ In the case of appliances with an IEC connector, the change may be made by the customer.

10.4.1 Contacting Customer Service

Make sure that the following appliance information is available:

- ❑ Appliance name (model and index)
- ❑ Service no. (Service)
- ❑ Serial no. (S no.)

▶ Call up the appliance information via the display. (see Device information)

-or-

▶ Refer to the type plate for appliance information. (see 10.5 Model plate)

▶ Note down the appliance information.
▶ Notify customer service: Report errors and the appliance information.
▷ This will help us to provide you with a faster, more accurate service.
▶ Follow further instructions from Customer Service.

10.5 Model plate

The model plate is behind the drawers on the inside of the appliance.

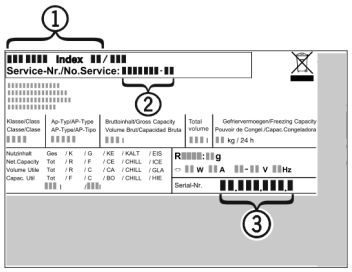

Fig. 132

(1) Appliance description **(3)** Serial no.
(2) Service no.

▶ Note the data on the model plate.

11 Shutting down

▶ Empty the appliance.
▶ Deactivate IceMaker. (see Deactivating the IceMaker / MaxIce)
▶ Switch off appliance. (see Turn off appliance)
▶ Remove mains connector.
▶ Remove appliance connector if required: Remove and move from left to right at the same time.
▶ Clean appliance. (see 9.3 Cleaning the appliance)
▶ Leave the door open, so that no unpleasant odours arise.

12 Disposal

12.1 Preparing appliance for disposal



Liebherr uses batteries in some of its appliances. In the EU, for environmental reasons, legislation obliges the end user to remove these batteries before disposing of old appliances. If your appliance contains batteries, a corresponding notice is attached.

Lamps — If you can remove the lamps yourself without destroying them, also remove these before disposal.

▶ Take the appliance out of operation.
▶ Appliances with batteries: remove the batteries. For description, see **Maintenance** chapter.
▶ If possible: remove lamps without destroying them.

12.2 Disposing of the appliance in an environmentally friendly manner



The appliance still contains valuable materials and must be disposed of separately from unsorted municipal waste.





Dispose of batteries separately from the old appliance. To do this, you can return the batteries free of charge to retailers as well as recycling centres and collection centres for recyclable materials.

Lamps — Dispose of removed lamps via the respective collection systems.

For Germany: — You can dispose of the appliance free of charge via the class 1 collection containers at the local recycling and recyclable material collection centres. When purchasing a new fridge/freezer, if the sales area > 400 m^2, retailers will also take back the old appliance free of charge.

WARNING
Leaking coolant and oil!
Fire. The coolant contained in the appliance is eco-friendly, but also flammable. The oil contained in the appliance is flammable. Escaping coolant and oil can ignite if the concentration is high enough and in contact with an external heat source.
▶ Do not damage the pipelines of the coolant circuit and the compressor.

▶ Transport the appliance without damaging it.
▶ Dispose of batteries, lamps and the appliance according to the above specifications.



home.liebherr.com/fridge-manuals

EN Integrated freezer

Issue date: 20240227

Part number index: 7088436-00

Liebherr-Hausgeräte GmbH
Memminger Straße 77-79
88416 Ochsenhausen
Deutschland

User Guide

Quality, Design and Innovation



home.liebherr.com/fridge-manuals

LIEBHERR

Contents

1 Appliance at a glance ... 3
1.1 Scope of delivery ... 3
1.2 Overview of appliances and equipment ... 3
AutoDoor ... 3
1.4 SmartDevice ... 4
1.5 Appliance range of use ... 4
1.6 Conformity ... 4
1.7 SVHC substances according to REACH regulation. 5
1.8 EPREL database ... 5

2 General safety instructions ... 5

3 Functionality of the Touch & Swipe display ... 6
3.1 Navigation and symbol explanation ... 6
3.2 Menus ... 7
3.3 Sleep mode ... 7

4 Putting into operation ... 7
4.1 Switching on appliance (first use) ... 7
4.2 Putting InfinitySpring into operation* ... 8
4.3 Starting the HydroBreeze for the first time ... 8

5 Storage ... 8
5.1 Information regarding storage ... 8
5.2 Fridge compartment ... 8
5.3 BioFresh ... 9
5.4 ****-freezer compartment* ... 9
5.5 Storage times ... 9

6 Saving energy ... 10

7 Controls ... 10
7.1 Controls and displays ... 10
7.1.1 Status display ... 10
7.1.2 Display symbols ... 10
7.2 Appliance functions ... 11
7.2.1 Notes on the appliance functions ... 11
Switching the appliance off and on ... 11
WiFi ... 11
Temperature ... 12
Temperature unit ... 12
BioFresh B-Value ... 13
D-Value ... 13
AutoDoor ... 13
SuperCool ... 16
PartyMode ... 16
HolidayMode ... 16
SabbathMode ... 17
EnergySaver ... 18
HydroBreeze ... 18
CleaningMode ... 19
Display brightness ... 19
Door alarm ... 19
AutoDoor tone ... 20
Input lock ... 20
Language ... 20
Device information ... 21
Software ... 21
Reminder ... 21
Demo mode ... 21
Resetting to factory settings ... 22
7.3 Messages ... 23
7.3.1 Overview of warnings ... 23
7.3.2 Ending warnings ... 23
7.3.3 Overview of reminders ... 24
7.3.4 Ending reminders ... 25

8 Features ... 25
8.1 4-star freezer compartment* ... 25
8.2 Door rack ... 26
8.3 Shelves ... 27
8.4 Dividing shelf ... 27
8.5 VarioSafe ... 27
8.6 InfinitySpring* ... 30
8.7 Space for baking tray ... 30
8.8 Adjustable bottle shelf ... 30
8.9 Drawers ... 30
8.10 Fruit & Vegetable safe cover ... 31
8.11 Adjusting the moisture levels ... 32
8.12 HydroBreeze ... 32
8.13 Butter dish ... 33
8.14 Egg rack ... 33
8.15 Bottle holder ... 33
8.16 FlexSystem ... 33

9 Maintenance ... 34
9.1 FreshAir carbon filter ... 34
9.2 Water tank* ... 34
9.3 Water filter* ... 35
9.4 Disassembling / assembling pull-out systems ... 35
9.5 Defrosting the appliance ... 36
9.6 Defrosting the freezer compartment manually* ... 36
9.7 Cleaning the appliance ... 36

10 Customer help ... 37
10.1 Technical specifications ... 37
10.2 Operating noises ... 37
10.3 Technical fault ... 37
10.4 Customer Service ... 39
10.5 Model plate ... 40

11 Shutting down ... 40

12 Disposal ... 40
12.1 Preparing appliance for disposal ... 40
12.2 Disposing of the appliance in an environmentally friendly manner ... 40

The manufacturer is continually working on the further development of all types and models. Please be aware that we reserve the right to make changes to the shape, equipment and technology.

Symbol	Explanation
	**Read instructions** Please read the information in these instructions carefully to understand all of the benefits of your new appliance.
	**Additional information on the Internet** The digital manual with additional information and in other languages can be found via the QR code on the front of the manual or by entering the service number at **home.liebherr.com/fridge-manuals**. The service number can be found on the serial tag: 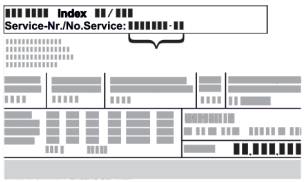 *Fig.* Example illustration
	**Check appliance** Check all parts for transport damage. If you have any complaints, please contact your agent or customer service.
	**Differences** These instructions apply to a range of models, so differences are possible. Sections that apply to certain models only are marked with an asterisk (*).
	**Instructions and results** Instructions are marked with a ▶. Results are marked with a ▷.
	**Videos** Videos about the appliances are available on the YouTube channels of Liebherr-Hausgeräte.

These operating instructions apply to:

IRBA..	41.. / 51..

1 Appliance at a glance

1.1 Scope of delivery

Check all parts for transport damage. Contact your dealer or customer service in the event of complaints. (see 10.4 Customer Service)

Your new appliance comes with the following parts:

- Built-in appliance
- Features (depending on the model)
- Installation materials (depending on the model)
- “Quick Start Guide”
- “Installation Guide”
- Service Brochure

1.2 Overview of appliances and equipment

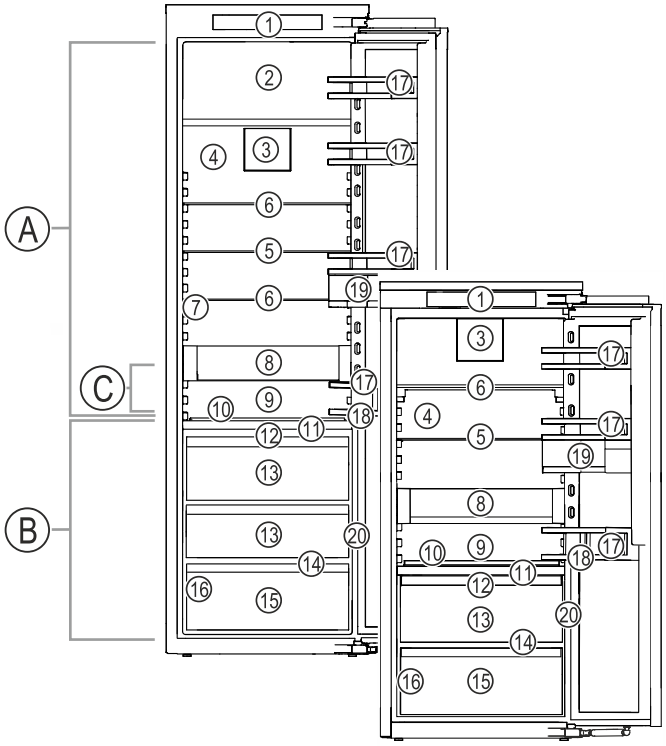

Fig. 1 Example illustration

Temperature range

(A) Fridge compartment
(B) BioFresh
(C) Coldest zone

Equipment

(1) Controls
(2) 4-star freezer compartment*
(3) Fan with FreshAir activated charcoal filter
(4) Dry rear panel
(5) Divisible storage shelf
(6) Storage shelf
(7) InfinitySpring*
(8) VarioSafe
(9) Space for baking tray
(10) Variable bottle shelf
(11) HydroBreeze
(12) Lid for Fruit & Vegetable safe
(13) Fruit & Vegetable safe
(14) Drain hole
(15) Meat & Dairy safe
(16) Type plate
(17) Door shelf
(18) Bottle holder
(19) VarioBoxes
(20) Knock sensor

Note

▶ Shelves, drawers and baskets are arranged for optimum energy efficiency when the appliance is delivered. Changing how the shelves, for example, are inserted in the fridge compartment does not have any impact on energy consumption.

AutoDoor

Your appliance is equipped with AutoDoor.

You can open the door in various ways:

- by hand
- by knocking
- by smartphone
- by voice command

	Knocking You can open and close the door by knocking on it with your hand. You can configure the knocking signal using the display and controls. You can change the sensitivity to knocking at any time.
	Smartphone You can open and close the door by smartphone. To do this you must install the SmartDevice app on your smartphone and connect your appliance to the WiFi. You make all the settings in the SmartDevice app.
	Voice command You can open and close the door by voice command. To do this you must install the SmartDevice app on your smartphone, connect your appliance to the WiFi and use a suitable voice assistant. You make all the settings in the SmartDevice app.



You can find detailed information and tutorials at:

home.liebherr.com/faq-autodoor

1.4 SmartDevice

SmartDevice is the networking solution for your refrigerator.

If your appliance SmartDevice-enabled or compatible, you can quickly and easily connect your appliance to your WiFi. With the SmartDevice app, you can operate your appliance from a mobile device. Additional functions and setting options are available in the SmartDevice SmartDevice app.

SmartDevice-enabled appliance:	Your appliance is capable of being a SmartDevice. To be able to connect your device to WiFi, you need to download the SmartDevice app.



More information about SmartDevice:	**smartdevice.liebherr.com**
Downloading the SmartDevice app:	After installing and configuring the SmartDevice, you can connect your appliance to the WiFi using the SmartDevice app and the WiFi appliance function (see WiFi) .

Note
The SmartDevice function is not available in the following countries: Russia, Belarus, Kazakhstan.

1.5 Appliance range of use

Intended use

The appliance is only suitable for cooling food products in a domestic or household-like environment. This includes, for example, use:

- in staff kitchens, bed and breakfast establishments,
- by guests in country houses, hotels, motels and other accommodation,
- for catering and similar services in the wholesale trade.

The appliance is not suitable for freezing food;*

All other types of use are not permitted.

Foreseeable misuse

The following applications are expressly forbidden:

- Storing and refrigerating medicines, blood plasma, laboratory preparations or similar substances and products based on the Medical Device Directive 2007/47/EC
- Use in areas at risk of explosions

Misusing the appliance may lead to damage to the goods stored or they may spoil.

Climate classifications

Depending on the climate classification the appliance is designed to operate in restricted ambient temperatures. The climate classification applying to your appliance is printed on the rating plate.

Note

▶ Keep to the specified ambient temperatures in order to guarantee that the appliance works properly.

Climate classification	for ambient temperatures of
SN	10 °C to 32 °C
N	16 °C to 32 °C
ST	16 °C to 38 °C
T	16 °C to 43 °C
SN-ST	10 °C to 38 °C
SN-T	10 °C to 43 °C

1.6 Conformity

The refrigerant circuit has been tested for leaks. When installed, the appliance complies with the applicable safety regulations and with the corresponding directives.

For the market:	EU	The appliance complies with directive 2014/53/EU.
For the market:	GB	The appliance complies with Radio Equipment Regulations 2017 SI 2017 No. 1206.

The full text of the EU Declaration of Conformity is available on the following website: www.Liebherr.com

*** Depending on model and options**

The BioFresh compartment meets the requirements of a cold storage compartment as set out in DIN EN 62552:2020.

1.7 SVHC substances according to REACH regulation

You can check whether your appliance contains SVHC substances according to REACH regulation at the following link: home.liebherr.com/de/deu/de/liebherr-erleben/nachhaltigkeit/umwelt/scip/scip.html

1.8 EPREL database

Details about energy labelling and ecodesign requirements will be available on the European product database (EPREL) from 1st March 2021. You can access the product database at the following link: https://eprel.ec.europa.eu/ You will be asked to enter the model ID. You can find the model ID on the nameplate.

2 General safety instructions

Please keep these operating instructions in a safe place so you can refer back to them at any time.

If you pass the appliance on, please hand these operating instructions to the next user.

Read these operating instructions carefully before use to ensure safe and correct use of the appliance. Follow the instructions, safety instructions and warning messages included at all times. They are important for ensuring you can operate and install the appliance safely and without any problems.

Danger for the user:

- This appliance can be used by children, as well as persons with limited mental, sensory and physical capabilities or with a lack of experience and knowledge, if supervised or following instruction regarding safe use of the appliance, and if they understand the dangers associated with it. Children must not play with the appliance. Cleaning and user maintenance shall not be made by children without supervision. Children aged from 3 to 8 years are allowed to load and unload refrigerating appliances. Children under 3 years of age must be kept away from the appliance unless constantly supervised.
- The socket must be easily accessible so that the appliance can be disconnected quickly from the electricity in an emergency. It must not be located in the area behind the appliance.
- When disconnecting the appliance from the supply, always take hold of the plug. Do not pull the cable.
- In the event of a fault pull out the mains plug or deactivate the fuse.
- Do not damage the mains power cable. Do not operate the appliance with a defective mains power cable.
- Only customer service or other specially trained staff may repair or perform other operations on the appliance.
- Only install, connect and dispose of the appliance according to the instructions.
- Only use the appliance when is installed.
- The manufacturer is not liable for damage caused by a faulty fixed water connection.*

Fire hazard:

- The coolant used (information on the model plate) is ecofriendly but also flammable. Any leaking coolant may ignite.
  - Do not damage the refrigerant circuit pipes.
  - Do not handle ignition sources inside the appliance.
  - Do not use electrical appliances inside the appliance (e.g. steam cleaners, heaters, ice cream makers, etc.).
  - If the refrigerant leaks: remove any naked flames or ignition sources from the vicinity of the leakage point. Properly air the room. Inform customer services.
- Do not store explosives or sprays using combustible propellants such as butane, propane, pentane, etc. in the appliance. To identify these spray cans, look for the list of contents printed on the can, or a flame symbol. Gases possibly escaping may ignite due to electrical components.
- Keep burning candles, lamps and other items with naked flames away from the appliance so that they do not set the appliance on fire.
- Please be sure to store alcoholic drinks or other packaging containing alcohol in tightly closed containers. Any alcohol that leaks out may be ignited by electrical components.

Danger of tipping and falling:

- Do not misuse the plinth, drawers, doors etc. as a step or for support. This applies particularly to children.

Danger of food poisoning:

- Do not consume food which has been stored too long.

Danger of frostbite, numbness and pain:

- Avoid prolonged skin contact with cold surfaces or refrigerated/frozen goods or take protective measures, e.g wear gloves.

Danger of injury and damage:

- Hot steam can lead to injury. Do not use electrical heating or steam cleaning equipment, open flames or defrosting sprays to defrost.
- Do not use sharp implements to remove the ice.

Risk of crushing:



Fig. 2

- When the door is closing, keep the door area clear and do not reach inside.
- Do not hold the hinge when opening and closing the door. Fingers may get caught.

Risk of damage:

If the door closes automatically, drawers and telescopic rails which are pulled out may be damaged.

- Push the drawers all the way in before the door closes automatically.
- If drawer has been removed: Push the telescopic rails all the way in before the door closes automatically.

Symbols on the appliance:



This symbol may be located on the compressor. It relates to the oil in the compressor and makes reference to the risk that: Swallowing or inhaling can be fatal. This advice is only relevant to recycling. There is no danger in normal operation.



This symbol is located on the compressor and indicates the danger of flammable materials. Do not remove the sticker.



This or a similar sticker may be located on the rear of the appliance. This sticker indicates that there are vacuum insulation panels (VIP) or perlite panels in the door and/or housing. This advice is only relevant to recycling. Do not remove the sticker.

Please note the warning messages and other specific advice in the other chapters:

⚠	DANGER	indicates an immediately hazardous situation which will lead to death or serious injuries if it is not avoided.
⚠	WARNING	indicates a hazardous situation which may lead to death or serious injuries if it is not avoided.
⚠	CAUTION	indicates a hazardous situation which may lead to minor or moderate injuries if it is not avoided.
	NOTICE	indicates a hazardous situation which may lead to damage to property if it is not avoided.
	Note	indicates useful instructions and tips.

3 Functionality of the Touch & Swipe display

You operate your appliance using the Touch & Swipe display. You select appliance functions in the Touch & Swipe display (hereafter referred to as display) by tapping them. If you do not perform any action on the display for 10 seconds, the display either jumps back to the higher-level menu or directly to the status display.

3.1 Navigation and symbol explanation

In the illustrations, different symbols are used to navigate the display. The following table describes these symbols.

Symbol	Description
	**Briefly touch the display:** Activates/deactivates function. Confirms selection. Opens submenu.
	**Touch the display for a specified time (e.g. 3 seconds):** Activates/deactivates function or value.
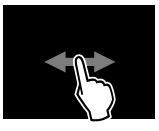	**Swipe left or right:** Navigate in the menu.
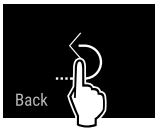	**Briefly touch the Back symbol:** Jumps back one menu level.

Symbol	Description
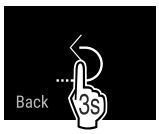	**Press and hold the Back symbol for 3 seconds:** Jumps back to the status display.
	**Arrow with clock:** It takes more than 10 seconds for the following message to appear in the display.
	**Arrow with a time indication:** It takes the specified amount of time until the following message appears in the display.
	**“Open Settings menu” symbol:** Navigates to the Settings menu and opens the settings menu. If necessary: Navigate to the desired function in the Settings menu. (see 3.2.1 Opening the Settings menu)
	**“Open Advanced menu” symbol:** Navigates to the Advanced menu and opens the advanced menu. If necessary: Navigate to the desired function in the Advanced menu. (see 3.2.2 Opening the expanded menu)
No action for 10 seconds	If you do not perform any action on the display for 10 seconds, the display either jumps back to the higher-level menu or directly to the status display.
Open door and close it again.	If you open the door and immediately close it again, the display jumps directly back to the status display.

Note: Illustrations of the display are shown in the English version.

3.2 Menus

The appliance functions are distributed over various menus:

Menu	Description
Main menu	When you switch the appliance on, you are automatically in the main menu. From here you can navigate to the most important appliance functions, to the Settings menu and to the Advanced menu.
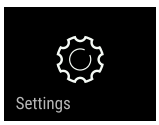 Settings menu	The Settings menu contains additional appliance functions for setting up your appliance.
Advanced menu	The advanced menu contains special appliance functions for setting up your appliance. Access to the Advanced menu is protected by the numerical code **1 5 1**.

3.2.1 Opening the Settings menu

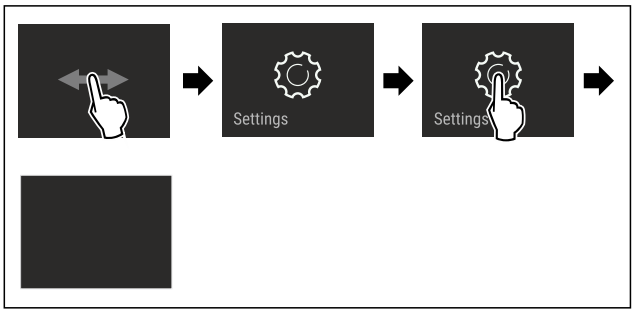

Fig. 3 Example illustration

▶ Carry out action steps according to the illustration.
▷ Settings menu is open.
▶ If necessary: Navigate to the desired function.

3.2.2 Opening the expanded menu



Fig. 4

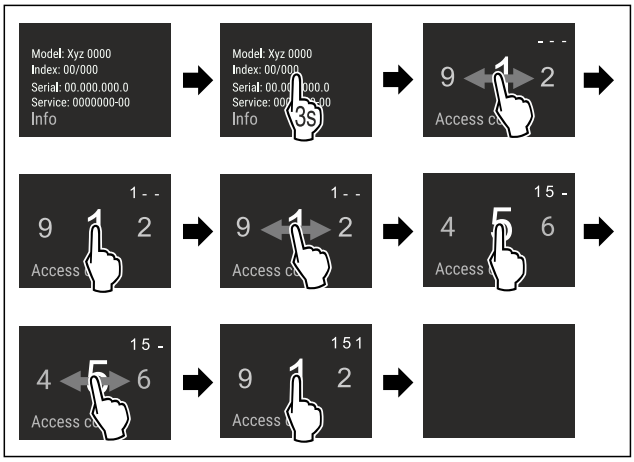

*Fig. 5 Example illustration, access with numerical code **151***

▶ Carry out action steps according to the illustration.
▷ The expanded menu is open.
▶ If necessary: Navigate to the desired function.

3.3 Sleep mode

If you do not touch the display for 1 minute, the display switches to sleep mode. In sleep mode, the display brightness is dimmed.

3.3.1 Ending sleep mode

▶ Touch the display briefly with your finger.
▷ Sleep mode is ended.

4 Putting into operation

4.1 Switching on appliance (first use)

Make sure that the following requirements are fulfilled:

❑ The appliance is properly installed and connected according to the installation instructions.
❑ All adhesive strips, adhesive and protective films and transport locks are removed from inside and on the appliance.

❑ All marketing leaflets are removed from the drawers.
❑ You are familiar with the functionality of the Touch & Swipe display. (see 3 Functionality of the Touch & Swipe display)

Switch on the appliance using the Touch & Swipe display:
▶ If the display is in sleep mode: Briefly touch the display.
▶ Carry out action steps according to the illustration.

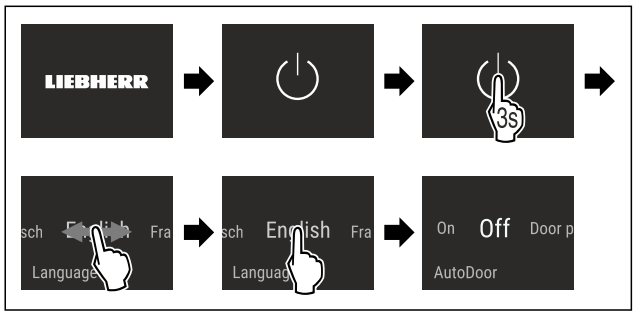

Fig. 6 Example illustration

▶ Activate AutoDoor. (see AutoDoor)
-or-
▶ Do not activate AutoDoor.

Note
If you do not activate AutoDoor, you can always open or close the door manually.

▷ The status display appears.
▷ The appliance cools to the temperature set at the factory.
▷ The appliance starts in demo mode (status display with DEMO appears): If the appliance starts in demo mode, you can deactivate demo mode within the next 5 minutes. (see Demo mode)

More information:
- Start the InfinitySpring for the first time. (see 4.2 Putting InfinitySpring into operation*) *
- Start the HydroBreeze for the first time. (see 4.3 Starting the HydroBreeze for the first time)
- Start the SmartDevice for the first time. (see 1.4 SmartDevice) and (see WiFi)

Note
The manufacturer recommends:
▶ Stock with food: Wait for around 6 hours until the set temperature is reached.
▶ **Store frozen foods** at -18 °C or colder.*
▶ Observe the notes on storing food. (see 5.1 Information regarding storage)

Note
Accessories can be purchased from the Liebherr-Hausgeräte store at home.liebherr.com/shop/de/deu/zubehor.html.

4.2 Putting InfinitySpring into operation*

If your appliance is equipped with an InfinitySpring, **before the first use** you must bleed the water system for the InfinitySpring and clean the InfinitySpring.

Make sure that the following requirements are fulfilled:
❑ The water supply is connected. See the Installation Guide or installation instructions.
❑ The water tank is fitted. See the Installation Guide or installation instructions.
❑ The water filter is fitted. See the Installation Guide or installation instructions.*
❑ Appliance is properly installed and connected.

4.2.1 Bleeding the water system

▶ Open the appliance door.
▶ Push a glass against the lower part of the InfinitySpring dispenser.
▷ The upper part moves out and air escapes or water flows into the glass.
▶ Continue until the water flows evenly into the glass.
▷ The water system is now bled.

4.2.2 Cleaning the InfinitySpring

(see 9.7.4 Cleaning the InfinitySpring *)

4.3 Starting the HydroBreeze for the first time

If your appliance is equipped with HydroBreeze, you must clean the HydroBreeze **before using it for the first time**.

Make sure that the following requirements are fulfilled:
❑ The appliance is properly installed and connected.

▶ Clean the HydroBreeze. (see 9.7.5 Cleaning the HydroBreeze)
▶ Fill the water tank. (see 8.12.1 Fill the water tank)
▶ Activate HydroBreeze. (see HydroBreeze)

5 Storage

5.1 Information regarding storage

WARNING
Risk of fire
▶ Do not use any electrical appliances in the food area of the appliance unless recommended by the manufacturer.

Note
The energy consumption increases and the cooling power goes down if ventilation is not sufficient.
▶ Always keep air slots clear.

Observe the following specifications for storage:
- Keep the air vents on the fan free.
- In the freezer compartment: Package food properly.*
- Package or cover foods that readily take on or give off odours or taste in closed containers.
- Package raw meat or fish in clean, closed containers. This will prevent meat or fish from touching or dripping onto other food.
- Keep liquids in closed containers.
- Leave space between goods to ensure good air circulation.
- Store food according to the instructions on the packaging.
- Always observe the best-before date indicated on the packaging.

Note
Failure to follow these guidelines can lead to foodstuffs spoiling.

5.2 Fridge compartment

The air circulation in the appliance creates different temperature zones. You will find the different temperature zones in the appliance and equipment overview. (see 1.2 Overview of appliances and equipment)

5.2.1 Arranging your food properly

- ▶ Upper area and door: Store butter, cheese, tinned food and tubes.
- ▶ Coldest temperature zone: Store perishable foods such as pre-cooked meals.

5.3 BioFresh

BioFresh will extend the storage time for some fresh foods compared to traditional refrigeration.

Note
If the temperature drops below 0 °C foods may freeze.
▶ Store cold-sensitive produce such as cucumbers, aubergines, courgettes and tropical fruit in the fridge compartment.

5.3.1 Fruit & Vegetable safe

This safe creates a storage climate of close to 0 °C. The tight lid ensures constant levels of humidity. This storage climate is suitable for storing unpackaged food with high intrinsic moisture (for example, lettuce, vegetables, fruit).

The humidity in the compartment depends on the moisture content of the chilled goods placed in it, and also depends on how often the compartment is opened. You can regulate the humidity level. (see 8.11 Adjusting the moisture levels)

Arranging your food properly

▶ Store unpackaged fruit and vegetables.
If the humidity is too high:
▶ Regulate the humidity. (see 8.11 Adjusting the moisture levels)

5.3.2 Meat & Dairy safe

This safe creates a storage climate of close to 0 °C. This storage climate is suitable for more sensitive foods (e.g. dairy products, meat, fish, sausage).

Arranging your food properly

▶ Store dry or packaged food.

5.4 ****-freezer compartment*

Here, a dry, frosty storage climate is created at -18 °C. The frosty storage climate is suitable for storing frozen food for several months, for making ice cubes or freezing fresh food.

The air temperature in the freezer compartment, measured with a thermometer or other measuring device, may fluctuate. Temperature fluctuations are greater in a half-full or empty freezer and it is possible to attain temperatures warmer than -18 °C.

5.4.1 Freezing food

The maximum amount of fresh food that you can freeze within 24 hours is specified on the type plate (see 10.5 Model plate) under “Freezing capacity ... kg/24h”.

To ensure that food quickly freezes through, adhere to the following quantities per package:

- Fruit and vegetables up to 1 kg
- Meat up to 2.5 kg

Arranging your food properly

CAUTION
Risk of injury due to broken glass!
Bottles and cans containing drinks may burst when being frozen. This applies particularly to sparkling drinks.
▶ Do not freeze bottles and cans containing drinks!

▶ Place packaged food in the freezer compartment in such a way that it is in contact with the bottom or sides.

Defrosting food

WARNING
Risk of food poisoning!
▶ Do not re-freeze thawed food.
▶ Use defrosted foodstuff as soon as possible.

You can defrost food in several ways:

- In the fridge compartment
- In the microwave
- In the oven/fan-assisted oven
- At room temperature

▶ Take out only as much food as necessary.

5.5 Storage times

Refer to the specified storage times as a guide.

In the case of foods with a minimum shelf life, the date indicated on the packaging still applies.

5.5.1 Fridge section

Always follow the best-before date stated on the packaging.

5.5.2 BioFresh

Recommended storage periods in the Meat & Dairy-Safe		
Butter	at 1 °C	up to 90 days
Hard cheese	at 1 °C	up to 110 days
Milk	at 1 °C	up to 12 days
Sausage, cold meats	at 1 °C	up to 8 days
Poultry	at 1 °C	up to 6 days
Pork	at 1 °C	up to 6 days
Beef	at 1 °C	up to 6 days
Game	at 1 °C	up to 6 days

Note
▶ Remember that high-protein foods perish quicker; shellfish and crustaceans do not last as long as fish, and fish does not last as long as meat.

Recommended storage periods in the Fruit & Vegetable-Safe		
Vegetables, salads		
Artichokes	at 1 °C	up to 14 days
Celery	at 1 °C	up to 28 days
Cauliflower	at 1 °C	up to 21 days
Broccoli	at 1 °C	up to 13 days
Chicory	at 1 °C	up to 27 days

Recommended storage periods in the Fruit & Vegetable-Safe		
Lettuce	at 1 °C	up to 19 days
Peas	at 1 °C	up to 14 days
Kale	at 1 °C	up to 14 days
Carrots	at 1 °C	up to 80 days
Garlic	at 1 °C	up to 160 days
Turnip	at 1 °C	up to 14 days
Lettuce	at 1 °C	up to 13 days
Herbs	at 1 °C	up to 13 days
Leeks	at 1 °C	up to 29 days
Mushrooms	at 1 °C	up to 7 days
Radishes	at 1 °C	up to 10 days
Brussels sprouts	at 1 °C	up to 20 days
Asparagus	at 1 °C	up to 18 days
Spinach	at 1 °C	up to 13 days
Savoy	at 1 °C	up to 20 days
Fruit		
Apricots	at 1 °C	up to 13 days
Apples	at 1 °C	up to 80 days
Pears	at 1 °C	up to 55 days
Blackberries	at 1 °C	up to 3 days
Dates	at 1 °C	up to 180 days
Strawberries	at 1 °C	up to 7 days
Figs	at 1 °C	up to 7 days
Blueberries	at 1 °C	up to 9 days
Raspberries	at 1 °C	up to 3 days
Currants	at 1 °C	up to 7 days
Sweet cherries	at 1 °C	up to 14 days
Kiwis	at 1 °C	up to 80 days
Peaches	at 1 °C	up to 13 days
Plums	at 1 °C	up to 20 days
Cranberries	at 1 °C	up to 60 days
Rhubarb	at 1 °C	up to 13 days
Gooseberries	at 1 °C	up to 13 days
Grapes	at 1 °C	up to 29 days

5.5.3 Freezer compartment*

Recommended shelf-lives for various types of food		
Ice cream	at -18 °C	2 to 6 months
Cold cuts, ham	at -18 °C	2 to 3 months
Bread, baked goods	at -18 °C	2 to 6 months
Game, pork	at -18 °C	6 to 9 months
Fatty fish	at -18 °C	2 to 6 months
Lean fish	at -18 °C	6 to 8 months
Cheese	at -18 °C	2 to 6 months
Poultry, beef	at -18 °C	6 to 12 months
Vegetables, fruit	at -18 °C	6 to 12 months

6 Saving energy

- Pay attention to good ventilation. Do not cover ventilation holes or grids.
- Always keep the fan air slits clear.
- Do not install the appliance in direct sunlight or near radiators or similar sources of heat.
- If the appliance is installed directly next to an oven, the energy consumption may increase slightly. This is dependent on the service life and usage intensity of the oven.
- Energy consumption depends on the installation conditions, e.g. the ambient temperature (see 1.5 Appliance range of use) . A warmer ambient temperature can increase the energy consumption.
- Open the appliance for as short a time as possible.
- The lower the temperature is set the higher the energy consumption.
- Sort your food: home.liebherr.com/food.
- Keep all food properly packed and covered. This prevents frost from forming.
- Only take food out for as long as necessary so that it doesn't warm up too much.
- Inserting warm food: allow to cool down to room temperature first.
- Thaw frozen food in the refrigerator.*
- If there is a thick layer of frost in the appliance: defrost the appliance.*
- For longer periods of absence, use HolidayMode (see HolidayMode) .

7 Controls

7.1 Controls and displays

7.1.1 Status display



Fig. 7 The status display shows the actual temperature.

(1) Temperature display of the fridge section **(2)** Temperature display BioFresh

The status display shows the actual temperature and is the initial display. Navigation to the functions takes place from there.

7.1.2 Display symbols

Display symbols provide information on the current appliance status:

Symbol	Appliance status
	**Standby** The appliance or temperature zone is switched off.

Symbol	Appliance status
	**Flashing number** Appliance is working. Temperature flashes until the set temperature is reached.
	
	**Flashing symbol** Appliance is working. Setting is made.
	

7.2 Appliance functions

7.2.1 Notes on the appliance functions

The appliance functions are set at the factory so that your appliance is fully functional.

Before you alter, activate or deactivate the device functions, make sure that the following requirements are met:

❑ You have read and understood the descriptions of how the display works. (see 3 Functionality of the Touch & Swipe display)
❑ You have familiarised yourself with the operating and display elements of your appliance.

Switching the appliance off and on

Use this function to switch the entire appliance off and on.

Switching off the appliance

When you switch the appliance off, then the previously saved settings are saved.

Make sure that the following requirements are fulfilled:

❑ Handling instructions (see 11 Shutting down) are carried out.



Fig. 8

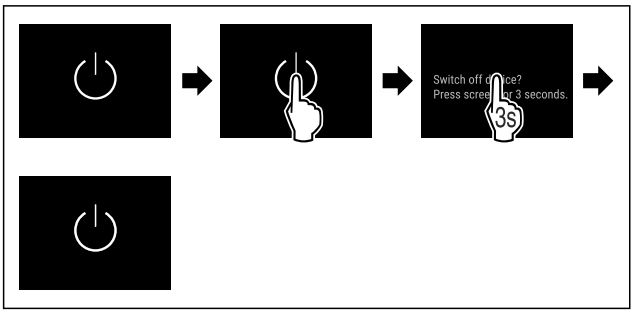

Fig. 9

▶ Carry out action steps according to the illustration.
▷ Appliance is switched off.
▷ The standby symbol appears in the display.
▷ Display turns black.

Switching on the appliance

If the display is in sleep mode:

▶ Briefly touch the display.

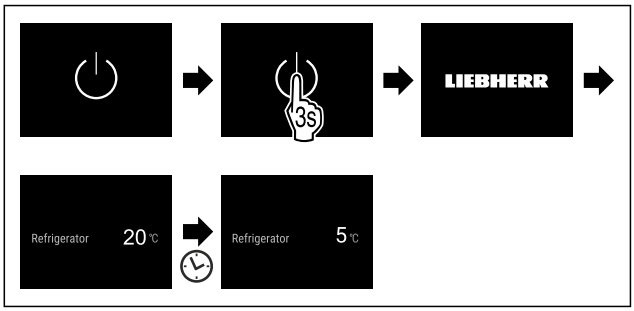

Fig. 10 Example illustration

▶ Carry out action steps according to the illustration.
When the appliance starts in demo mode:
▶ Deactivating demo mode. (see Deactivating demo mode)
▷ The appliance is switched on.
▷ Previous settings are restored.
▷ The appliance cools to the target temperature set.

WiFi

Use this function to connect your appliance to WiFi. You can then operate it via the SmartDevice app on a mobile device. You can also use this function to disconnect or reset the WiFi connection.

More information on the SmartDevice: (see 1.4 SmartDevice)

Note
The SmartDevice function is not available in the following countries: Russia, Belarus, Kazakhstan.

Establishing the WiFi connection for the first time

Make sure that the following requirements are fulfilled:

❑ You have installed the SmartDevice app (see apps.home.liebherr.com).
❑ Registration in the SmartDevice app is completed.



Fig. 11

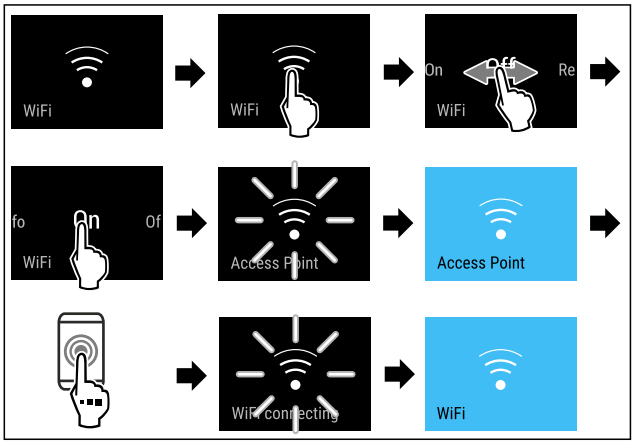

Fig. 12

▶ Carry out action steps according to the illustration.
▷ Connection is established.

Disconnecting from the WiFi



Fig. 13

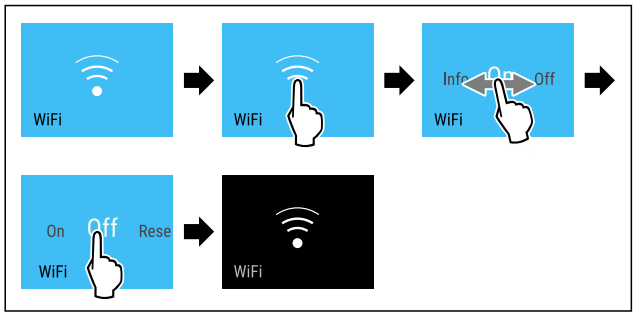

Fig. 14

▶ Carry out action steps according to the illustration.
▷ There is no connection.

Resetting the WiFi connection



Fig. 15

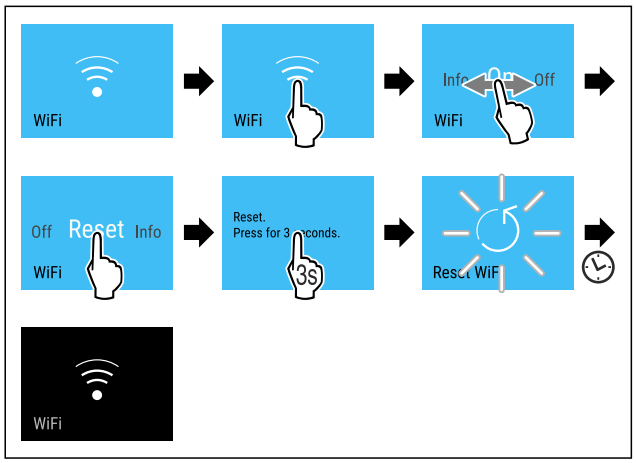

Fig. 16

▶ Carry out action steps according to the illustration.
▷ WiFi connection and other WiFi settings are reset to factory settings.

Showing information about the WiFi connection



Fig. 17

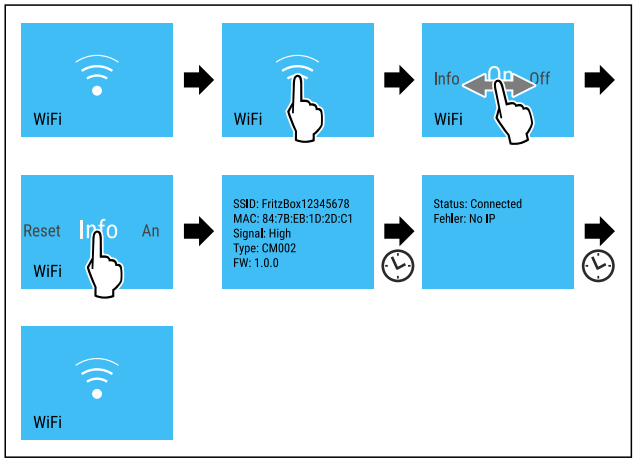

Fig. 18

▶ Carry out action steps according to the illustration.

5 °C Temperature

Use this function to set the temperature.

The temperature depends on the following factors:

- Frequency of door opening
- Duration of door opening
- Room temperature of the installation site
- Type, temperature and quantity of food

Temperature zone	Factory-set temperature	Recommended setting
5 °C Fridge section	5 °C	4 °C
0 °C BioFresh	0 °C	B-Value (see BioFresh B-Value)

Setting the temperature in the fridge section

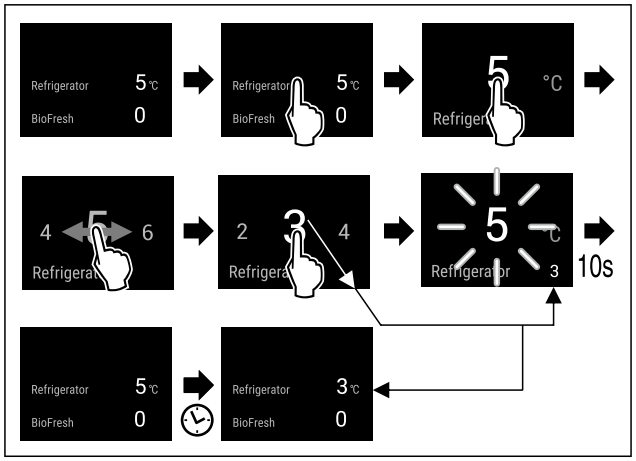

Fig. 19 Example illustration

▶ Carry out action steps according to the illustration.
▷ Temperature is set.

Setting the temperature in BioFresh

Set the temperature using the **BioFresh B-Value**. (see BioFresh B-Value)

°C/°F Temperature unit

Use this function to set the temperature unit. You can set degrees Celsius or degrees Fahrenheit as the temperature unit.

Setting the temperature unit



Fig. 20

*** Depending on model and options**

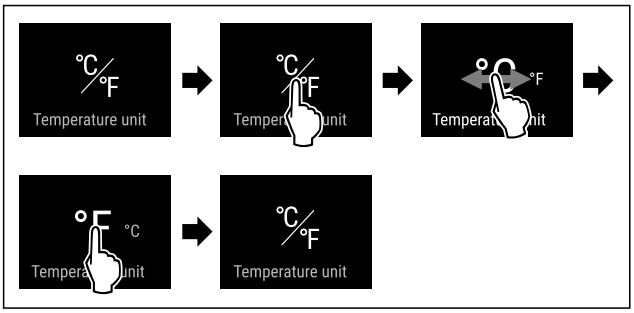

Fig. 21 Example illustration: Switch from degrees Celsius to degrees Fahrenheit.

▶ Carry out action steps according to the illustration.
▷ The temperature unit is set.

B5 BioFresh B-Value

Use this function to set the BioFresh B-Value. With the BioFresh B-Value, you can set BioFresh slightly warmer or colder if necessary due to higher or lower ambient temperatures. The BioFresh B-Value is pre-set to value B5 as delivered. If you change the B-Value, refer to the following table:

Value	Description
B1	Lowest temperature
B1-B4	The temperature can drop below 0 °C which means foods can easily freeze.
B5	Pre-set temperature
B9	Highest temperature

Setting the BioFresh B-Value



Fig. 22

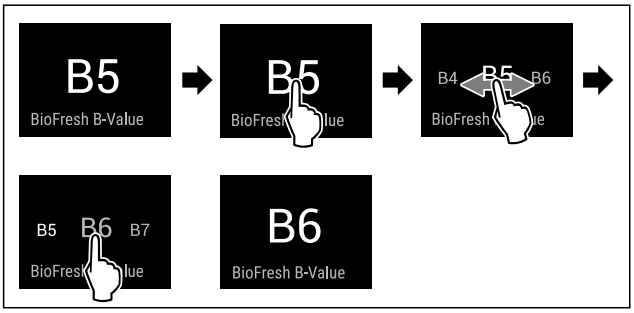

Fig. 23 Example illustration: Switch from B5 to B6.

▶ Carry out action steps according to the illustration.
▷ The BioFresh B-Value is set.
▷ Status display shows target temperature.

D1 D-Value

The D-Value is pre-set for your appliance and is not permitted to be changed.

AutoDoor

Use this function to activate and configure AutoDoor when commissioning the device or at a later time. If you have already activated and configured AutoDoor, deactivate AutoDoor with this function. This function can also be used to configure the door opening angle.

If AutoDoor is activated, the door can be opened in different ways:

- by knocking signal
- by smartphone
- by voice command

Note
If you do not activate AutoDoor, you can always open or close the door manually.

If the function is active, the device operates at higher power. As a result, the device's operating noise may be temporarily louder and energy consumption will increase.

Activating and configuring AutoDoor for the first time

Activate and configure AutoDoor for the first time either directly during **commissioning** of the device or at a later time.



Fig. 24

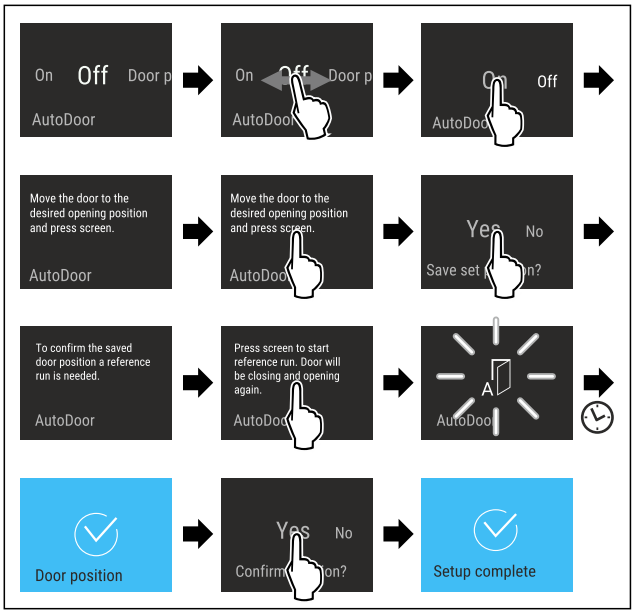

Fig. 25

▶ Carry out the steps shown in the illustration until the display prompts you to move the door to the desired position.
▶ To configure the door opening angle: Open door at least 70°.
▶ Ensure that the door does not touch any neighbouring furniture or walls.
▶ To confirm the door opening angle: Touch the display for a short time as per the illustration.
▶ To save the door opening angle: Confirm the message in the display as shown.

CAUTION

Risk of injury from automatic opening and closing of the door!

- ▶ Keep the door opening area clear.
- ▶ Do not reach into the hinge with your hand.
- ▶ Do not block the door.

NOTICE

Damage to the drawers and telescopic rails from automatic closing of the door!

- ▶ Before the door closes: Push the drawers all the way in.
- ▶ Before the door closes and when drawer has been removed: Push the telescopic rails all the way in.



Fig. 26

To set the door opening angle, the device must perform a reference run of the door.

- ▶ To start a reference run: Touch the display for a short time as per the illustration.
- ▷ Reference run starts.
- ▷ AutoDoor symbol flashes.
- ▷ If reference run is successful: Display turns blue for 2 seconds.
- ▷ A confirmation signal sounds.
- ▶ Confirm the message in the display as shown.
- ▷ Display turns blue.
- ▷ A confirmation signal sounds.
- ▷ AutoDoor configuration is complete.
- ▷ Door can be opened by knocking signal.

Deactivating and activating AutoDoor

You have already activated and configured AutoDoor. You wish to deactivate and activate AutoDoor.

Deactivating AutoDoor



Fig. 27

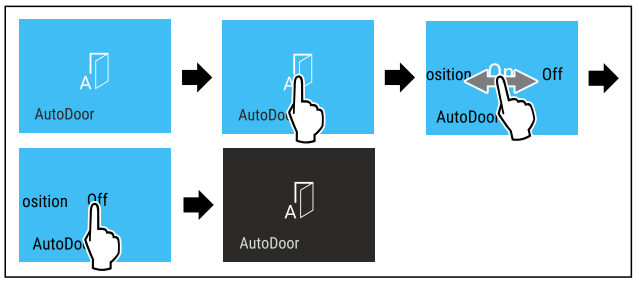

Fig. 28

- ▶ Carry out action steps according to the illustration.
- ▷ AutoDoor is deactivated.
- ▷ Door can be opened manually by hand.

Activating AutoDoor



Fig. 29

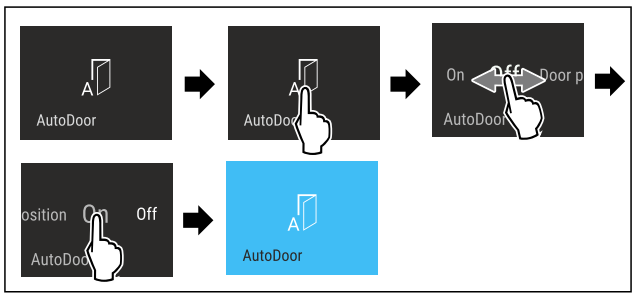

Fig. 30

- ▶ Carry out action steps according to the illustration.
- ▷ AutoDoor is activated.
- ▷ Door can be opened by knocking signal.
- ▷ Previously set door opening angle is still saved.

Changing the door opening angle

You have already configured a door opening angle and you wish to change it.



Fig. 31

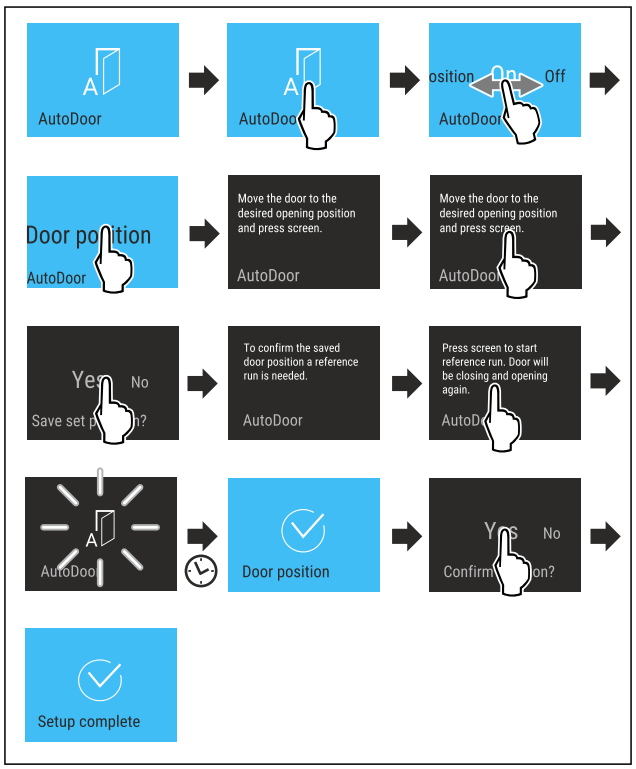

Fig. 32

- ▶ Carry out the steps shown in the illustration until the display prompts you to move the door to the desired position.

- ▶ To configure the door opening angle: Open door at least 70°.
- ▶ Ensure that the door does not touch any neighbouring furniture or walls.
- ▶ To confirm the door opening angle: Touch the display for a short time as per the illustration.
- ▶ To save the door opening angle: Confirm the message in the display as shown.

CAUTION

Risk of injury from automatic opening and closing of the door!

- ▶ Keep the door opening area clear.
- ▶ Do not reach into the hinge with your hand.
- ▶ Do not block the door.

NOTICE

Damage to the drawers and telescopic rails from automatic closing of the door!

- ▶ Before the door closes: Push the drawers all the way in.
- ▶ Before the door closes and when drawer has been removed: Push the telescopic rails all the way in.



Fig. 33

To set the door opening angle, the device must perform a reference run of the door.

- ▶ To start a reference run: Touch the display for a short time as per the illustration.
- ▷ Reference run starts.
- ▷ AutoDoor symbol flashes.
- ▷ If reference run is successful: Display turns blue for 2 seconds.
- ▷ A confirmation signal sounds.
- ▶ Confirm the message in the display as shown.
- ▷ Display turns blue.
- ▷ A confirmation signal sounds.
- ▷ Door opening angle is configured.

Adjusting the sensitivity of the knocking signal

You can use a switch *Fig. 34 (1)* to adjust the sensitivity of the knocking sensor. The switch is on the bottom third of the door on the hinge side.

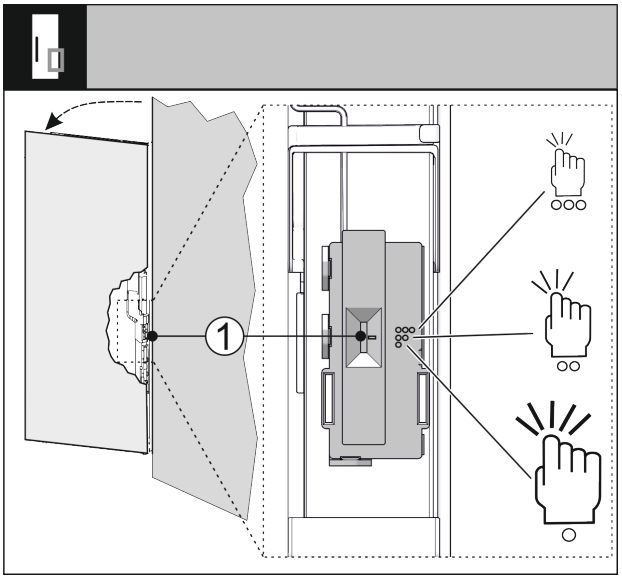

Fig. 34

Switch position	Symbol	Importance
Top	○○○	High sensitivity, gentle knocking sufficient.
Middle	○○	Moderate sensitivity, normal knocking required. This setting is the default.
Bottom	○	Less sensitive, strong knocking required.

- ▶ Move the switch *Fig. 34 (1)* to the required switch position.
- ▷ The sensitivity is set.

Using AutoDoor with a smartphone

You wish to use the smartphone for opening and closing.

- ▶ Activate and configure AutoDoor. (see Activating and configuring AutoDoor for the first time)
- ▶ Install the SmartDevice app on your smartphone.
- ▶ Establishing WLAN connection on the device. (see WiFi)
- ▶ To register the device in the SmartDevice app: Follow the instructions in the SmartDevice app.
- ▷ Door can be opened by smartphone in addition to the knocking signal.

Using AutoDoor with voice command

You want to use a voice command for opening and closing.

- ▶ Activate and configure AutoDoor. (see Activating and configuring AutoDoor for the first time)
- ▶ Install the SmartDevice app on your smartphone.
- ▶ Establishing WLAN connection on the device. (see WiFi)
- ▶ To register the device in the SmartDevice app: Follow the instructions in the SmartDevice app.
- ▶ Install voice assistant.
- ▷ Door can be opened by voice assistant in addition to the knocking signal.

You can find further information and tutorials at:
home.liebherr.com/faq-autodoor

SuperCool

You can use this function to activate or deactivate SuperCool. If SuperCool is activated, then the appliance increases the cooling capacity. It allows you to achieve lower cooling temperatures. You can activate SuperCool when you would like to cool a large quantity of food quickly.

If SuperCool is activated, then lower temperatures are reached in the **** freezer compartment. You can activate SuperCool when you would like to freeze food in the **** freezer compartment.*

If the function is active, the appliance operates at higher power. As a result, the appliance's operating noise may be temporarily louder and energy consumption will increase.

Activating SuperCool

Time for activation of the function:

- When you would like to store fresh food in the fridge section: Activate the function when inserting food.
- When you would like to store fresh food in the **** freezer compartment: Activate function 3 hours before inserting the food.*

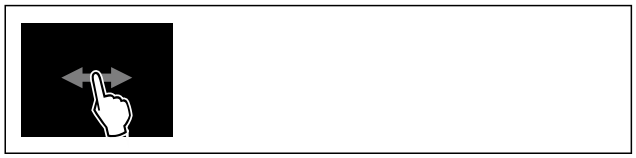

Fig. 35

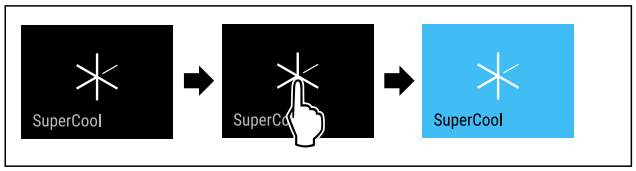

Fig. 36

▶ Carry out action steps according to the illustration.

-or-

▶ Activate with the SmartDevice app.

▷ SuperCool is activated.
▷ The temperature display turns blue.

Deactivating SuperCool

SuperCool is deactivated automatically after 18 hours. However, you can also deactivate SuperCool manually at any time:

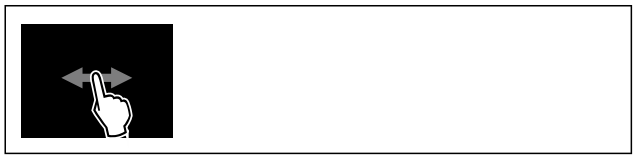

Fig. 37

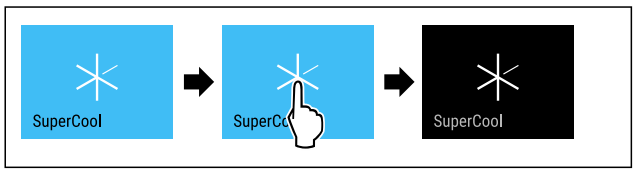

Fig. 38

▶ Carry out action steps according to the illustration.

-or-

▶ Deactivate with the SmartDevice app.

▷ SuperCool is deactivated.
▷ The appliance continues to run in normal mode.
▷ The appliance cools to the temperature set previously.

PartyMode

You can use this function to activate or deactivate PartyMode. PartyMode activates various functions that are useful for a party.

PartyMode activates the following functions:

- SuperCool

You can adjust all listed functions individually and flexibly. When you deactivate PartyMode, all changes are discarded.

If the function is active, the device operates at higher power. As a result, the device's operating noise may be temporarily louder and energy consumption will increase.

Activating PartyMode

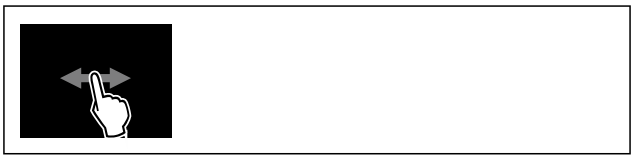

Fig. 39

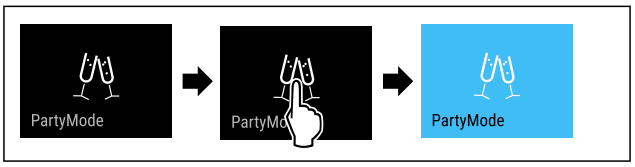

Fig. 40

▶ Carry out action steps according to the illustration.
▷ PartyMode and the associated functions are activated.
▷ The temperature display turns blue.
▷ The current temperature flashes until the target temperature is reached.

Deactivating PartyMode

The PartyMode is automatically deactivated after 24 seconds. However, you can also deactivate PartyMode manually at any time:

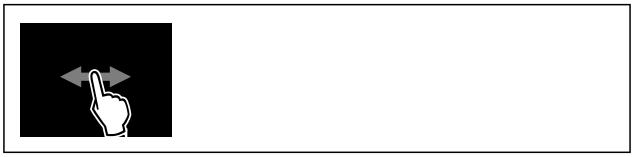

Fig. 41

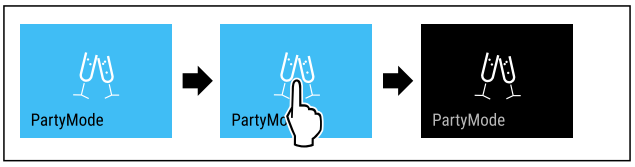

Fig. 42

▶ Carry out action steps according to the illustration.
▷ PartyMode is deactivated.
▷ The appliance cools to the temperature set previously: The current temperature flashes until the target temperature is reached.

HolidayMode

You can use this function to activate or deactivate HolidayMode. If you activate HolidayMode, the fridge section is set to 15 °C. This saves you energy during longer periods of absence and prevents bad odours and growth of mould.

*** Depending on model and options**

Appliance status when HolidayMode is active
Fridge section cools to 15 °C.
BioFresh cools to 15 °C.
The set temperature is maintained in the **** freezer compartment.*
PartyMode is deactivated.
SuperCool is deactivated.

Activating HolidayMode

▶ Empty the fridge section completely.
▶ Empty BioFresh completely.

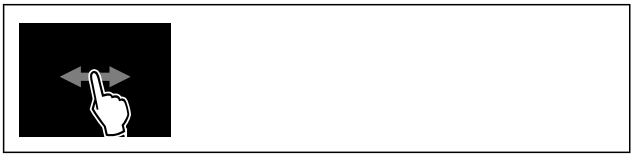

Fig. 43

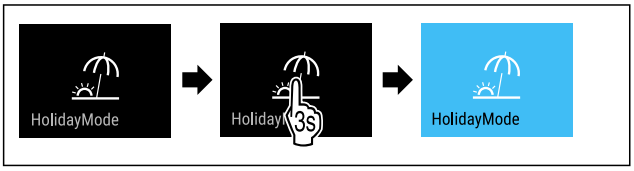

Fig. 44

▶ Carry out action steps according to the illustration.
▷ HolidayMode is activated.
▷ Temperature display turns blue and shows HolidayMode symbol.

Deactivating HolidayMode



Fig. 45

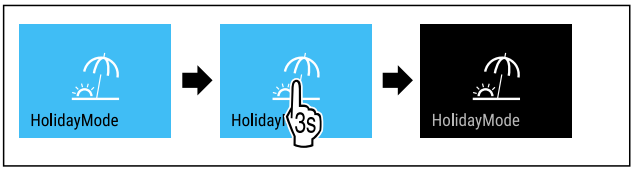

Fig. 46

▶ Carry out action steps according to the illustration.
▷ HolidayMode is deactivated.
▷ The appliance cools to the temperature set previously.

SabbathMode

You can use this function to activate or deactivate SabbathMode. If you activate this function, some electronic functions are switched off. As a result, your device meets the religious requirements for Jewish holidays such as Sabbath and complies with STAR-K Kosher certification.

Device status when SabbathMode is active
The status display shows SabbathMode permanently.
All functions on the display are locked except for the **Deactivate SabbathMode function**.
Active functions remain active.

Device status when SabbathMode is active
The display remains bright when you close the door.
The interior lighting is deactivated.
Reminders are not implemented. The set time interval stops.
Reminders and warnings are not displayed.
There is no door alarm.
There is no temperature alarm.
The InfinitySpring is switched off.*
The defrosting cycle operates only for the specified time, without considering the appliance consumption.
After a power failure, the appliance returns to SabbathMode.

Device status

Note
This appliance has certification from the “Institute for Science and Halacha”. (www.machonhalacha.co.il)

You can find a list of STAR-K-certified appliances at www.star-k.org/appliances.

Activating SabbathMode

WARNING
Danger of food poisoning from spoiled food!
If you have SabbathMode activated and a power failure occurs, no message appears in the status display about the power failure. Once the power is restored, the appliance continues to operate in SabbathMode. The power failure may mean that food spoils and the consumption of this food could lead to food poisoning.
After a power failure:
▶ Do not consume food that was frozen and has thawed out.



Fig. 47

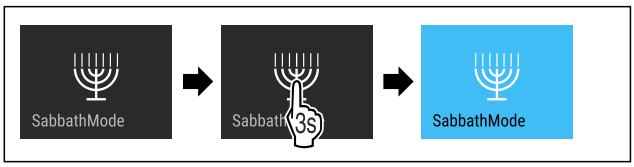

Fig. 48

▶ Carry out action steps according to the illustration.
▷ SabbathMode is activated.
▷ The status display shows SabbathMode permanently.

Deactivating SabbathMode

The SabbathMode is automatically deactivated after 80 hours. However, you can also deactivate SabbathMode manually at any time:

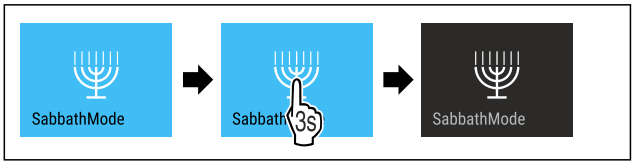

Fig. 49

▶ Carry out action steps according to the illustration.

▷ SabbathMode is deactivated.

EnergySaver

You can use this function to activate or deactivate Energy saving mode. If energy saving mode is activated, the energy consumption decreases and the temperature in the device increases. The food remains fresh, but the shelf life is shortened.

Temperature zone	Recommended setting (see Setting the temperature in the fridge section)	Temperature with active EnergySaver
5 °C Fridge section	4 °C	7 °C

Temperatures

Activating EnergySaver



Fig. 50

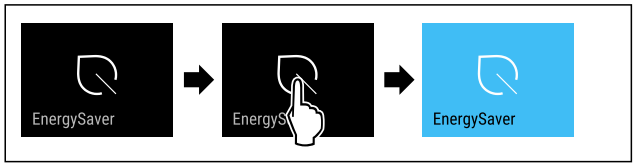

Fig. 51

▶ Carry out action steps according to the illustration.
▷ Energy saving mode is activated.

Deactivating EnergySaver



Fig. 52

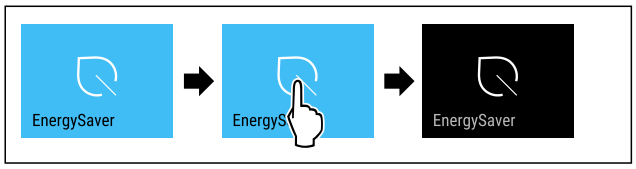

Fig. 53

▶ Carry out action steps according to the illustration.
▷ Energy saving mode is deactivated.

HydroBreeze

You can use this function to activate or deactivate HydroBreeze. If you activate the function, HydroBreeze generates a fine, cool mist in BioFresh-safe. This extends the shelf life of unpackaged salad, vegetables and fruit with high intrinsic moisture.

If you activate the function, HydroBreeze activates every 90 minutes for 4 seconds when the door is closed. When you open the door, HydroBreeze activates according to the setting:

Value	Description
1	HydroBreeze is active for 4 seconds when the door is open.
2	HydroBreeze is active for 6 seconds when the door is open.
3	HydroBreeze is active for 8 seconds when the door is open.
Deactivated (pre-setting)	HydroBreeze is deactivated.

HydroBreeze duration when the door is open

Activating HydroBreeze

Note
If you activate HydroBreeze but there is no food in the drawer, condensate forms on the base of the drawer.
▶ Only activate HydroBreeze if you are storing food in the drawer.

Make sure that the following requirements are fulfilled:
❑ The HydroBreeze is clean. (see 9.7.5 Cleaning the HydroBreeze)
❑ The water tank is full. (see 8.12.1 Fill the water tank)

Activate HydroBreeze by selecting a value for the HydroBreeze duration:

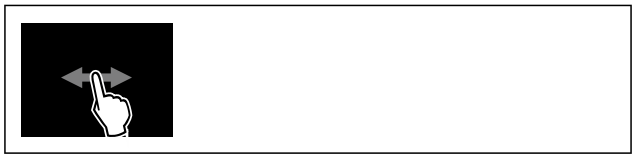

Fig. 54

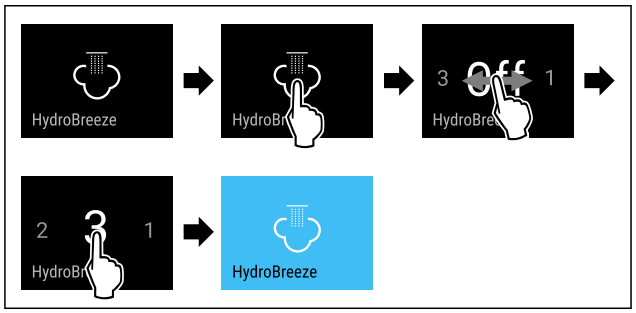

Fig. 55 Example illustration: Activate HydroBreeze with value 3.

▶ Carry out action steps according to the illustration.
▷ HydroBreeze is activated.

Deactivating HydroBreeze



Fig. 56

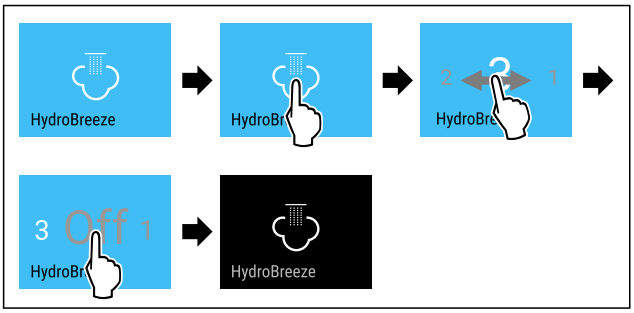

Fig. 57

▶ Carry out action steps according to the illustration.
▷ HydroBreeze is deactivated.

CleaningMode

You can use this function to activate or deactivate CleaningMode. CleaningMode enables the appliance to be cleaned conveniently.

This setting applies to the fridge section.

Application:

- Clean the fridge section. (see 9.7 Cleaning the appliance)
- Clean the InfinitySpring. (see 9.7.4 Cleaning the InfinitySpring *) *

Device status when CleaningMode is active
The status display shows CleaningMode permanently.
The fridge section is switched off.
Interior lighting is activated.
The reminders and warnings are not displayed. No signal tone sounds.
The InfinitySpring is switched off.*

Device status

Activating CleaningMode



Fig. 58

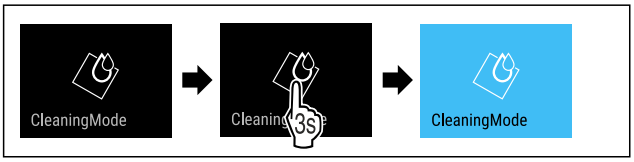

Fig. 59

▶ Carry out action steps according to the illustration.
▷ CleaningMode is activated.
▷ The status display shows CleaningMode permanently.

Deactivating CleaningMode

CleaningMode is deactivated automatically after 60 minutes. However, you can also deactivate CleaningMode manually at any time:

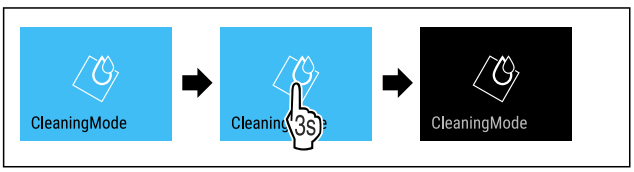

Fig. 60

▶ Carry out action steps according to the illustration.
▷ CleaningMode is deactivated.
▷ The appliance cools to the temperature set previously.

Display brightness

Use this function to set the display brightness in stages.

You can select the following brightness levels:

- 40 %
- 60 %
- 80 %
- 100 % (pre-setting)

Setting the brightness



Fig. 61

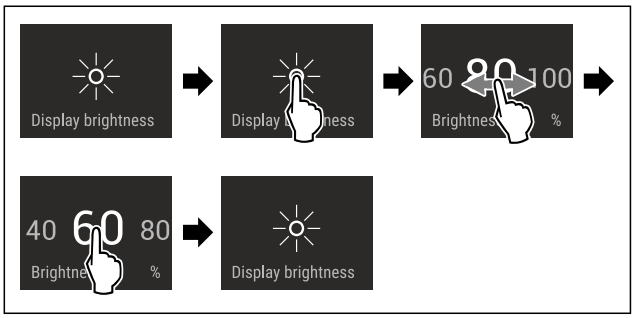

Fig. 62 Example illustration: Switch from 80 % to 60 %.

▶ Carry out action steps according to the illustration.
▷ The brightness is set.

Door alarm

Use this function to activate or deactivate the door alarm. The door alarm sounds if the door is open for too long. The door alarm is activated on delivery. You can set how long the door may be open before the door alarm sounds.

The following values can be set:

- 1 minute
- 2 minutes
- 3 minutes
- Off

Setting the door alarm



Fig. 63

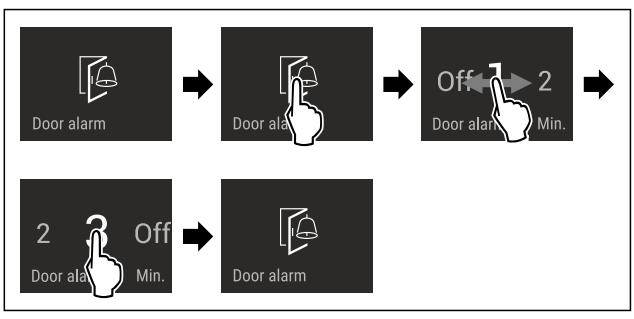

Fig. 64 Example illustration: Change door alarm from 1 minute to 3 minutes.

▶ Carry out action steps according to the illustration.
▷ The door alarm is set.

Deactivating the door alarm



Fig. 66

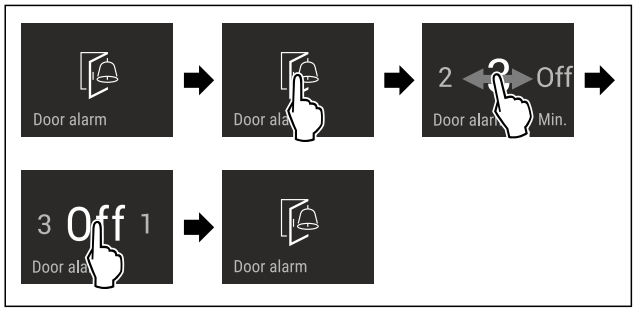

Fig. 67

▶ Carry out action steps according to the illustration.
▷ The door alarm is deactivated.

AutoDoor tone

You can use this function to activate or deactivate the AutoDoor tone. The AutoDoor tone is activated on delivery.

Activating the AutoDoor tone



Fig. 68

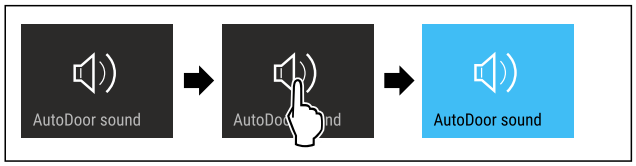

Fig. 69

▶ Carry out action steps according to the illustration.
▷ AutoDoor tone is activated.

Deactivating the AutoDoor tone



Fig. 70

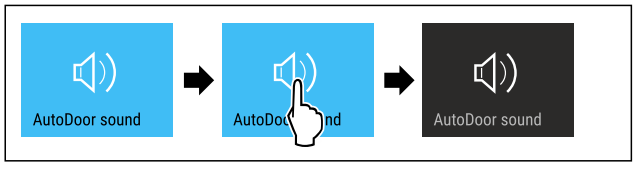

Fig. 71

▶ Carry out action steps according to the illustration.
▷ AutoDoor tone is deactivated.

Input lock

You can use this function to activate or deactivate the input lock. The input lock prevents the appliance being operated accidentally, e.g. by children.

Application:

- Avoid unintentional modification of functions.
- Avoid unintentional switching off of the device.
- Avoid unintentional temperature setting.

Activating the input lock

If you activate the input lock, you can continue to navigate in the menus but you cannot select or change other functions.



Fig. 72

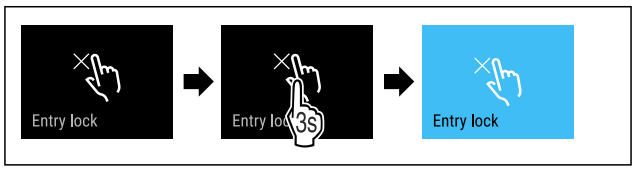

Fig. 73

▶ Carry out action steps according to the illustration.
▷ Input lock is activated.

Deactivating the input lock



Fig. 74

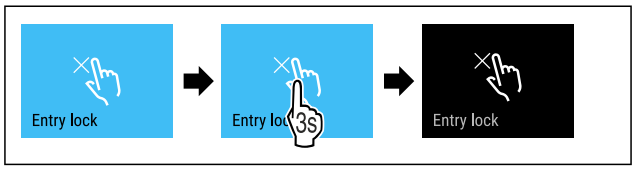

Fig. 75

▶ Carry out action steps according to the illustration.
▷ Input lock is deactivated.

Language

Use this function to set the display language.

You can select the following languages:

- Deutsch
- English
- Français
- Español
- Italiano
- Nederlands
- Čeština
- Polski
- Português
- Bulgarian
- Русский
- 温度单位

*** Depending on model and options**

Setting the language



Fig. 76

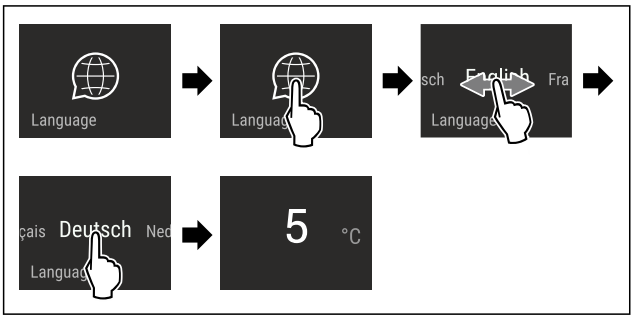

Fig. 77 Example illustration depending on the language and temperature

▶ Carry out action steps according to the illustration.
▷ The language is set.
▷ The display returns to the status display.

Device information

Use this function to indicate the model name, index, serial number and service number of your device. You will need the device information when you contact customer service. (see 10.4 Customer Service)

This function also opens the Advanced menu. (see 3 Functionality of the Touch & Swipe display)

Indicating the device information



Fig. 78

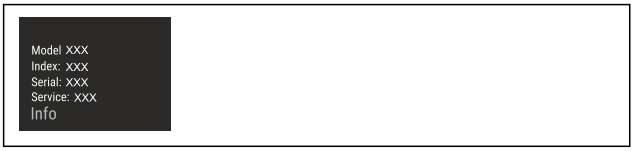

Fig. 79

▶ Carry out action steps according to the illustration.
▷ Display indicates device information.

Software

Use this function to indicate the software version of your device.

Indicating the software version



Fig. 80



Fig. 81

▶ Carry out action steps according to the illustration.
▷ Display indicates software version.

Reminder

Use this function to activate or deactivate the reminders. The function is activated on delivery.

If the function is activated, the following reminders will appear:

- Replace the water filter (see Replace the water filter*) *
- Replace the FreshAir activated carbon filter (see Replace the FreshAir activated carbon filter)

Activating the reminder



Fig. 82

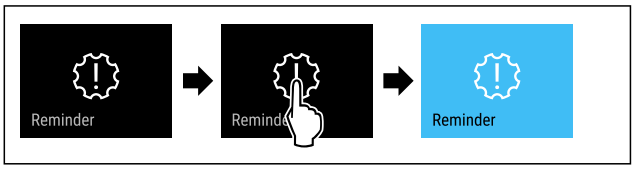

Fig. 83

▶ Carry out action steps according to the illustration.
▷ Reminder is activated.

Deactivating the reminder



Fig. 84

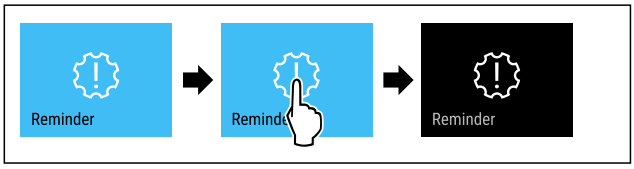

Fig. 85

▶ Carry out action steps according to the illustration.
▷ Reminder is deactivated.

Demo mode

Demo mode is a special feature for dealers who want to demonstrate appliance features. If you activate demo mode, all refrigeration functions are deactivated.

If you switch on your appliance and “Demo” appears in the status display, then demo mode is already activated.

If you activate and then deactivate demo mode, the appliance will be reset to factory defaults. (see Resetting to factory settings)

Activating demo mode



Fig. 86

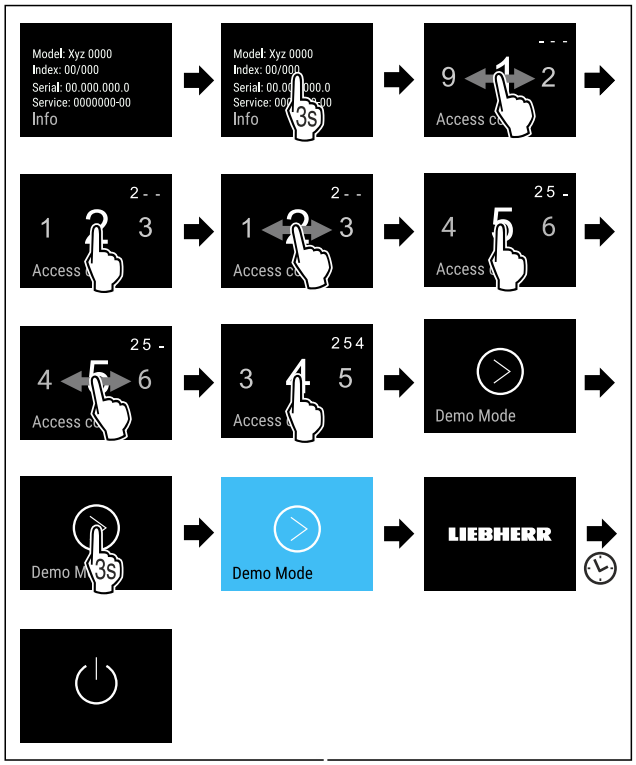

Fig. 87

▶ Carry out action steps according to the illustration.
▷ Demo mode is activated.
▷ Appliance is switched off.
▶ Switch on the appliance. (see 4.1 Switching on appliance (first use))
▷ “DEMO” appears in the status display.

Deactivating demo mode



Fig. 88

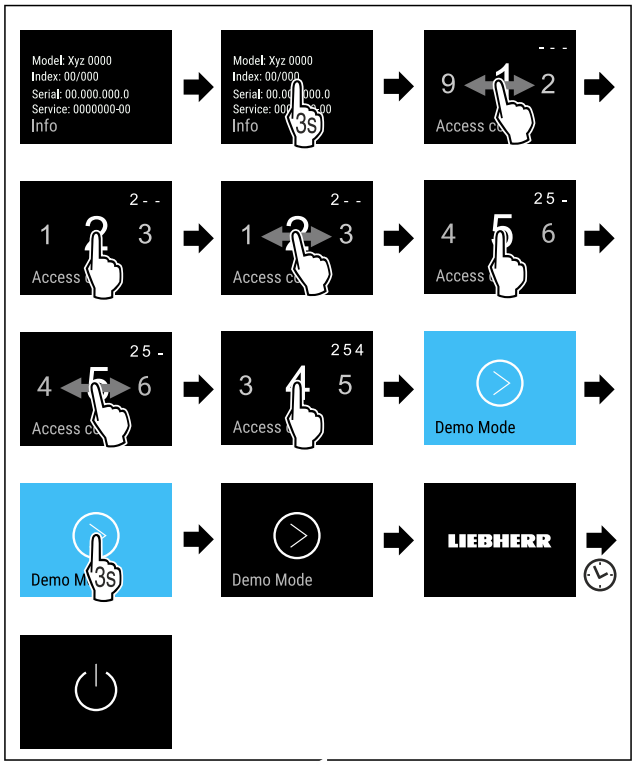

Fig. 89

▶ Carry out action steps according to the illustration.
▷ Demo mode is deactivated.
▷ Appliance is switched off.
▶ Switch on the appliance. (see 4.1 Switching on appliance (first use))
▷ Appliance is reset to factory settings.

Resetting to factory settings

Use this function to reset all settings to factory defaults. All settings you have made so far are reset to their original settings.

Performing a reset



Fig. 90

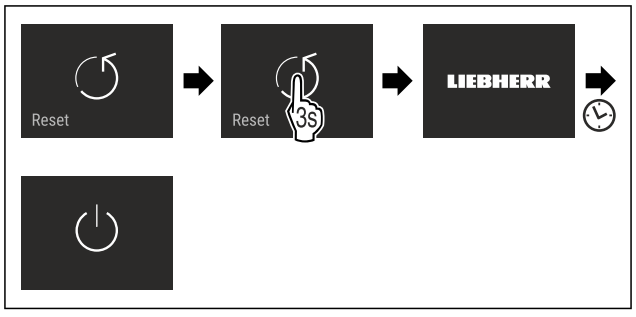

Fig. 91

▶ Carry out action steps according to the illustration.
▷ Device is reset.
▷ Device is switched off.
▶ Restart the device. (see 4.1 Switching on appliance (first use))

*** Depending on model and options**

7.3 Messages

There are two categories of messages:

Category	Importance
Warning	Warnings appear in the event of a door alarm or malfunction. Simple warnings can be cancelled by yourself. In the event of serious malfunctions, you must contact customer service. (see 10.4 Customer Service)
Reminder	Reminders remind you of general processes. You can carry out these operations to end the message.

7.3.1 Overview of warnings

Behaviour of the appliance in the event of warnings:
- Warning appears in red on the display.
- The alarm tone sounds at an ever-increasing volume.
- The interior lighting pulsates for some warnings.

Message	Cause	Exit the message
 **Door alarm**	The message appears if the door is open for too long.	Carry out action steps (see Door alarm) .
 **Error**	The message appears if there is an appliance error. A component of the appliance has a fault.	Carry out action steps (see Error) .
 **WLAN error**	The message appears if the appliance could not be connected to the WLAN. (see Establishing the WiFi connection for the first time)	Carry out action steps (see WLAN error) .

Message	Cause	Exit the message
 **AutoDoor** AutoDoor has been stopped.	The message appears if an obstacle prevents the door from opening or closing automatically.	Carry out action steps (see AutoDoor has been stopped) .
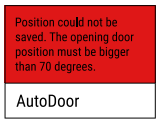 **AutoDoor** Position could not be saved.	The message appears when configuring AutoDoor if the selected door opening angle is too small. (see AutoDoor)	Carry out action steps (see Position could not be saved) .
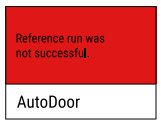 **AutoDoor** Reference run was not successful.	The message appears when configuring AutoDoor if the reference run was not successful. (see AutoDoor)	Carry out action steps (see Reference run was not successful) .
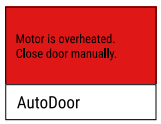 **AutoDoor** Motor cools down.	The message appears when the door motor cools down.	Carry out action steps (see Motor cools down) .

7.3.2 Ending warnings

Door alarm

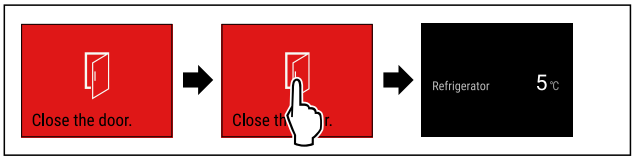

Fig. 92 Example illustration

▶ Carry out action steps according to the illustration.

-or-

▶ Close the door.

▷ The display returns to the status indicator.

You can set how long the door may be open before the door alarm sounds. (see Setting the door alarm)

Error

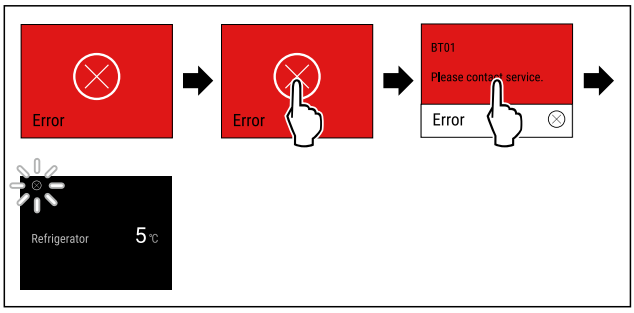

Fig. 93 Example illustration

▶ Briefly touch the display.
▷ Error code is displayed.
▶ Note the error code.
▶ Briefly touch the display.
▷ The display returns to the status indicator.
▶ Contact Customer Service. (see 10.4 Customer Service)

WLAN error

▶ Check WLAN connection.
▶ Reconnect the appliance to the WLAN. (see WiFi)

AutoDoor has been stopped

CAUTION

Risk of injury from automatic opening and closing of the door!

▶ Keep the door opening area clear.
▶ Do not reach into the hinge with your hand.
▶ Do not block the door.

NOTICE
Damage to the drawers and telescopic rails from automatic closing of the door!
- ▶ Before the door closes: Push the drawers all the way in.
- ▶ Before the door closes and when drawer has been removed: Push the telescopic rails all the way in.



Fig. 94

- ▶ Remove the obstacle.
- ▷ When obstacle has been removed: Door opens or closes automatically.
- ▷ If obstacle is not removed: Message appears again and door alarm is active.

Position could not be saved

The door opening angle must be greater than 70°.

If you want to cancel the configuration of AutoDoor:

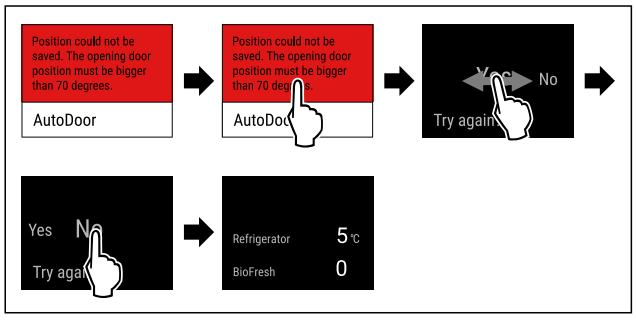

Fig. 95 Example illustration

- ▶ Carry out action steps according to the illustration.
- ▷ The display returns to the status indicator.

If you want to continue configuring AutoDoor and set the door opening angle:

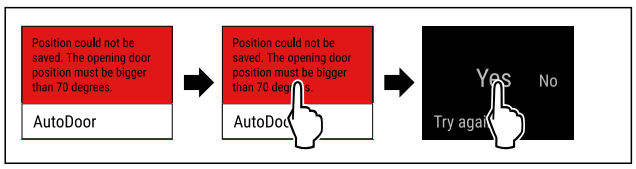

Fig. 96

- ▶ Carry out action steps according to the illustration.
- ▶ Reconfigure the door opening angle. (see AutoDoor)

Reference run was not successful

If you want to cancel the configuration of AutoDoor:

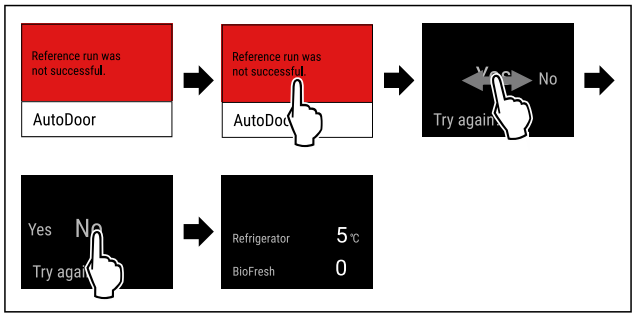

Fig. 97 Example illustration

- ▶ Carry out action steps according to the illustration.
- ▷ The display returns to the status indicator.

If you want to continue configuring AutoDoor and set the door opening angle:

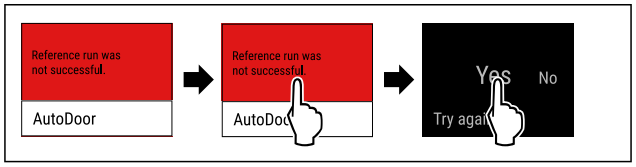

Fig. 98

- ▶ Carry out action steps according to the illustration.
- ▶ Reconfigure the door opening angle. (see AutoDoor)

Motor cools down

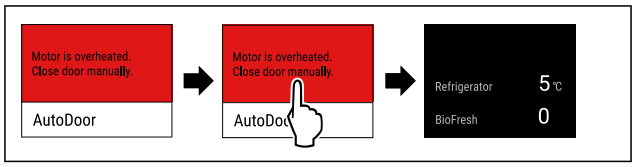

Fig. 99 Example illustration

- ▶ Carry out action steps according to the illustration.
- ▷ The display returns to the status indicator.
- ▷ Motor cools down and is active again shortly.
- ▶ Close the door by hand.

7.3.3 Overview of reminders

Behaviour of the appliance during reminders:
- Reminder appears yellow on the display.
- Alarm tone sounds.
- The interior lighting pulsates for some reminders.

Message	Cause	Exit the message
Water filter * **Replace the water filter***	The message appears when the water filter needs to be replaced.*	Carry out action steps (see Replace the water filter*) .*
FreshAir filter **Replace the FreshAir activated carbon filter**	The message appears when the activated carbon filter needs to be replaced.	Carry out action steps (see Replace the FreshAir activated carbon filter) .

*** Depending on model and options**

Message	Cause	Exit the message
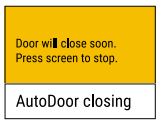 **AutoDoor will close soon**	The message appears if the door is opened lengthwise for more than 10 seconds.	Carry out action steps (see AutoDoor will close soon) .

7.3.4 Ending reminders

Replace the water filter*

Liebherr recommends: Replace the InfinitySpring water filter every 6 months.

Note
Water filters are available from the Liebherr-Hausgeräte store at home.liebherr.com/shop/de/deu/zubehor.html.

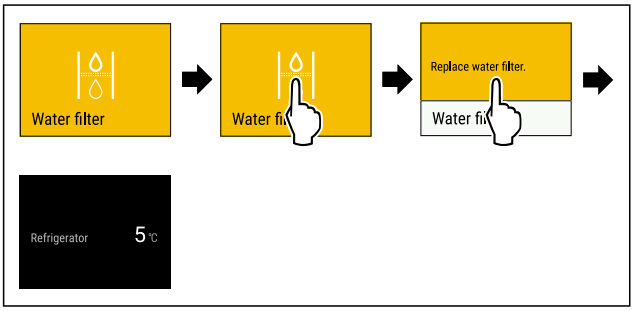

Fig. 100 Example illustration

▶ Briefly touch the display.
▷ Display shows reminder information.
▶ Briefly touch the display.
▶ Replace the water filter. (see 9.3 Water filter*)
▷ Water filter ensures optimum water quality.
▷ Reminder appears again after 6 months.

If you no longer wish to receive this reminder, you can deactivate it. (see Deactivating the reminder)

Replace the FreshAir activated carbon filter

Liebherr recommends: Replace the FreshAir activated carbon filter every 6 months.

Note
FreshAir activated charcoal filters can be purchased from the Liebherr-Hausgeräte store at home.liebherr.com/shop/de/deu/zubehor.html.

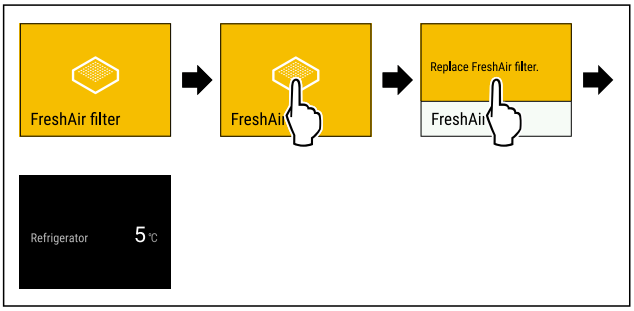

Fig. 101 Example illustration

▶ Briefly touch the display.
▷ Display shows reminder information.
▶ Briefly touch the display.
▶ Replace the activated carbon filter. (see 9.1 FreshAir carbon filter)
▷ Activated carbon filter ensures optimum air quality in the cooling unit.
▷ Reminder appears again after 6 months.

If you no longer wish to receive this reminder, you can deactivate it. (see Deactivating the reminder)

AutoDoor will close soon

If the reminder appears and you need more time before the door closes automatically:

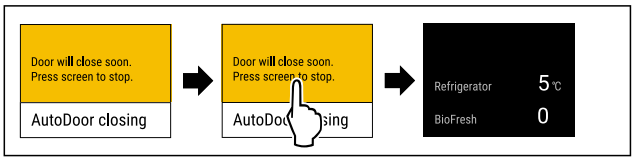

Fig. 102 Example illustration

▶ Carry out action steps according to the illustration.
▷ Automatic closing of the door is interrupted.
▷ The display returns to the status indicator.
▷ Door alarm is active. (see Door alarm)
▷ If the door alarm sounds: Door closes automatically.

If the reminder appears and you want the door to close:

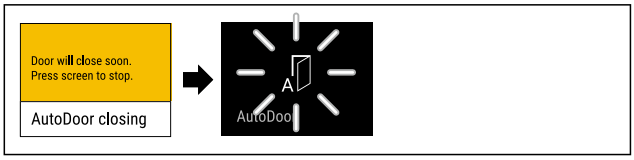

Fig. 103

▶ Do not perform any action on the display.
▷ As soon as automated closing of the door begins: Display shows flashing AutoDoor icon.
▷ Door closes automatically.

8 Features

8.1 4-star freezer compartment*

8.1.1 Opening/closing the freezer compartment

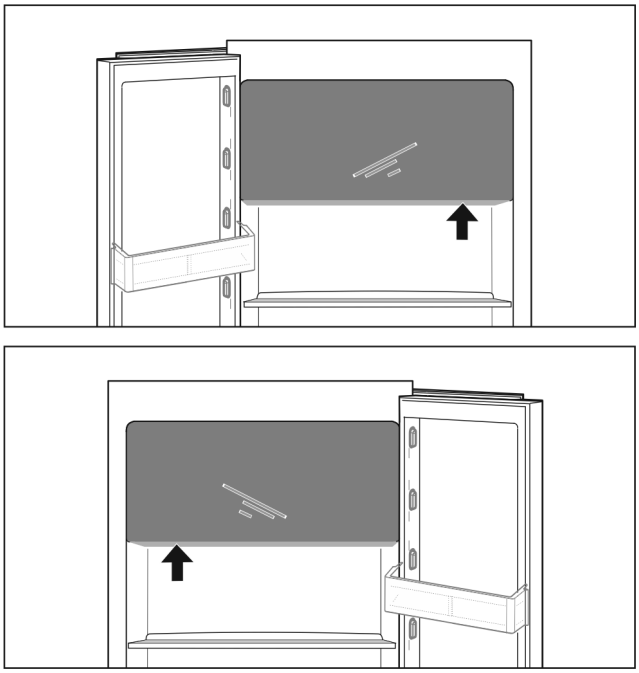

Fig. 104

Opening the freezer compartment:
▶ Reach into the handle area from below.
▶ Push the handle plate while pulling the door towards you.

Closing the freezer compartment:
▶ Close the door while pushing from the front.
▷ Door is engaged.

8.2 Door rack

8.2.1 Move/remove the door rack

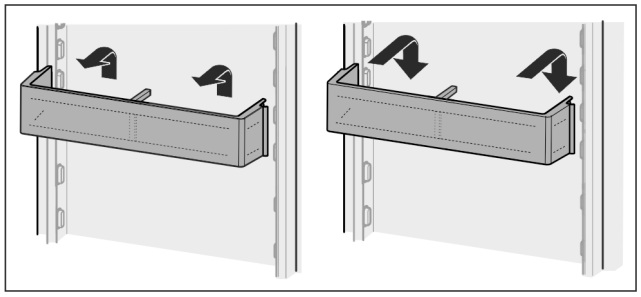

Fig. 105

▶ Slide the rack upwards.
▶ Pull forwards.
▶ Re-insert it in reverse order.

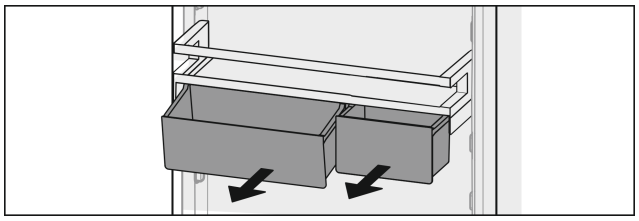

Fig. 106

You can use just one or both VarioBoxes. To store oversized bottles, just suspend one box over the bottle rack.

Move the VarioBox shelf:

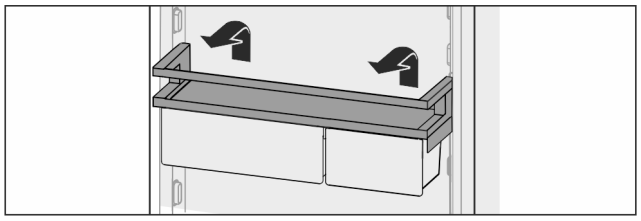

Fig. 107

▶ Pull it up and out.
▶ Put it back in at any position.
▷ In front of 4-star freezer: Optimum air flow in the appliance is no longer guaranteed. Condensate may form on the freezer compartment.*

Note
Liebherr recommends the following:*
▶ Put the VarioBox shelf in its default position, anywhere below the 4-star freezer. This will provide the best air flow in the fridge section.*

Moving the VarioBoxes:

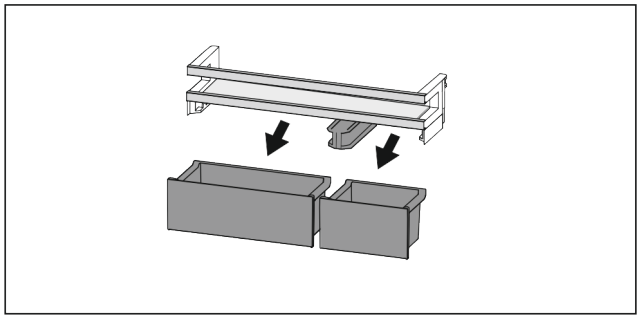

Fig. 108

If the door rack is removed:
▶ Remove containers.

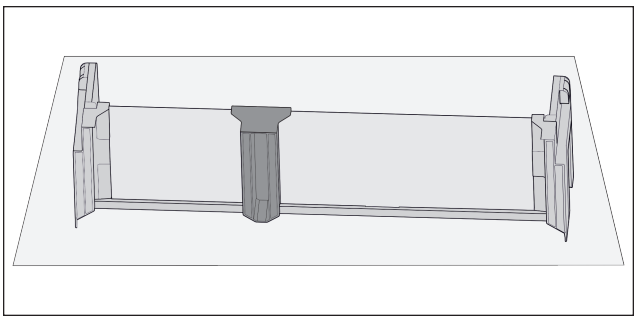

Fig. 109

▶ Place the shelf on the table.

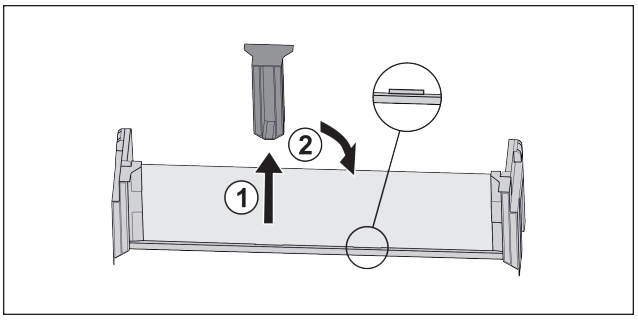

Fig. 110

▶ Pull off the middle holder *Fig. 110 (1)*.
▶ Insert the middle holder in the second position *Fig. 110 (2)*.

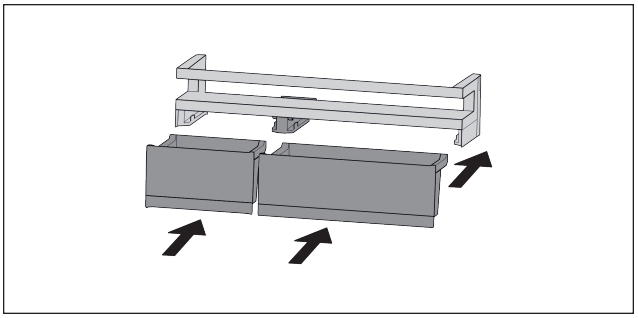

Fig. 111

▶ Replace containers.

8.2.2 Disassembling the door rack

The door rack can be taken apart for cleaning.

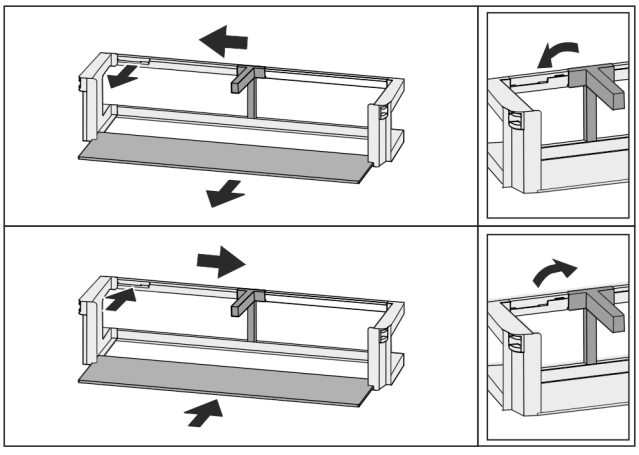

Fig. 112

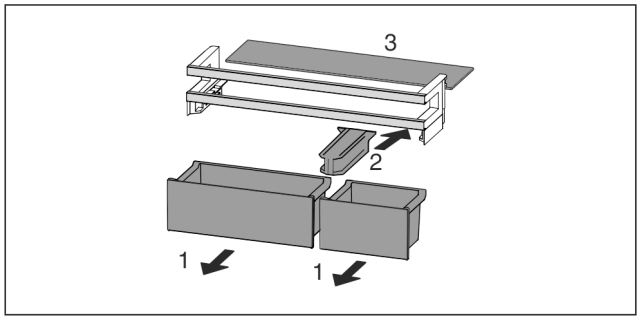

Fig. 113

▶ Disassemble the door rack.

8.3 Shelves

8.3.1 Adjusting/removing the shelves

The shelves are prevented from being pulled out accidentally by pull out stops.

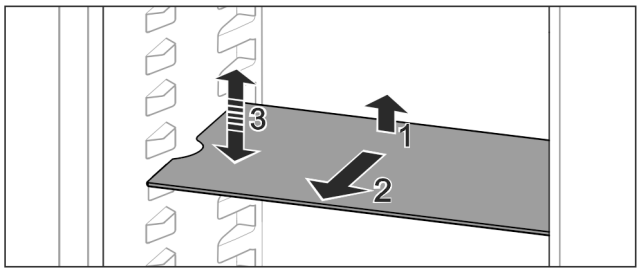

Fig. 114

▶ Lift the shelf and pull forward.
▷ Line up the side runner.
▶ Adjust the height of the shelf: Lift or lower it to the desired height and slide it in.

-or-

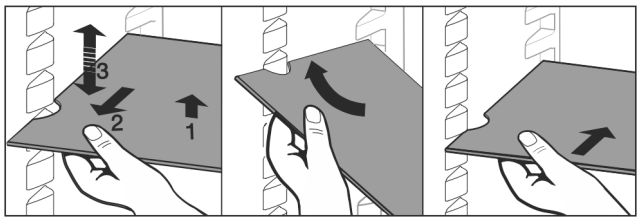

Fig. 115

▶ Remove the shelf completely: Pull it out to the front.

▶ Easier removal: Set the shelf at an angle.
▶ Insert the shelf again: Slide it in all the way.
▷ The pull-out stoppers point downwards.
▷ The pull-out stoppers are behind the front support.

8.4 Dividing shelf

8.4.1 Using the dividing shelf

The shelves are prevented from being pulled out accidentally by pull out stops.

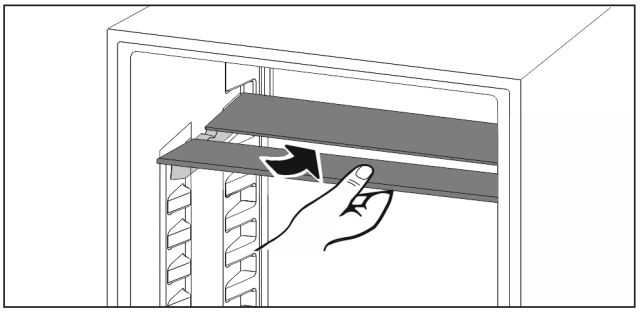

Fig. 116

▶ Push the dividing shelf underneath as shown.

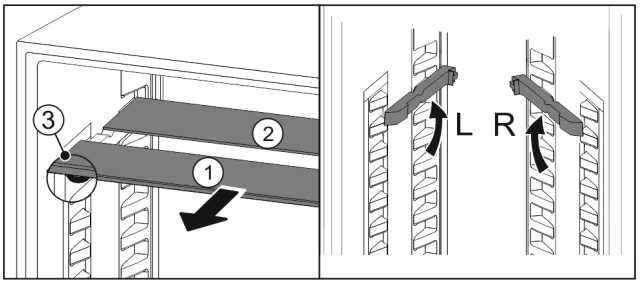

Fig. 117

Adjusting the height:

▶ Pull the glass panels out *Fig. 117 (1)* from the front, one at a time.
▶ Release the support rails and click in at the height you want.
▶ Slide in the glass panels one at a time.
▷ Flat pull-out stoppers at the front, right behind the support rails.
▷ High pull-out stoppers at the back.

Using both shelves:

▶ Hold the glass panel with one hand and pull it to the front.
▷ The glass panel *Fig. 117 (1)* and trim strip are at the front.
▷ The stops *Fig. 117 (3)* point down.
Appliances with freezer compartment:*
▶ Do not place the support rails and dividing shelf in front of the fan.*

8.5 VarioSafe

The VarioSafe offers space in the refrigerator compartment for small groceries, packages, tubes and jars, for example.

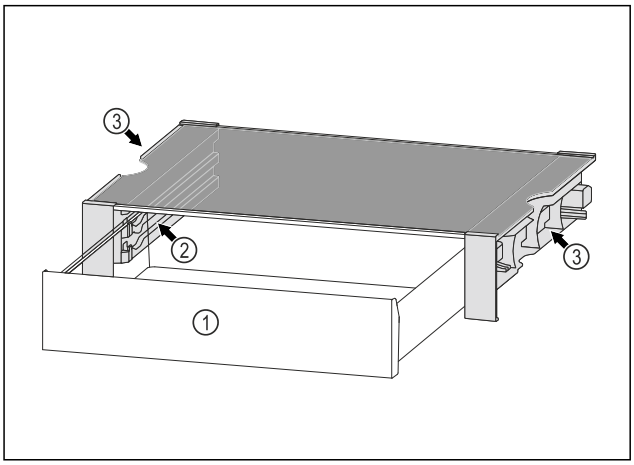

Fig. 118

(1) VarioSafe drawer

(2) Side panels with ribs for VarioSafe drawer

(3) Recesses on the left and right side panel

8.5.1 Inserting the VarioSafe

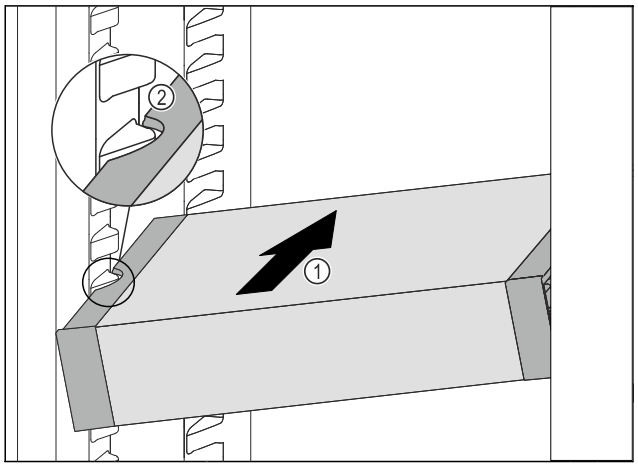

Fig. 119

▶ Insert the VarioSafe into the fridge section at an angle *Fig. 119 (1)* until the recesses in the side *Fig. 119 (2)* of the VarioSafe are at the level of the support rib in the fridge section.

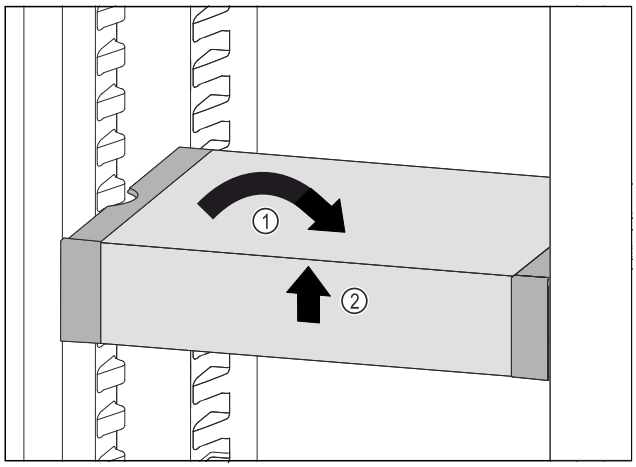

Fig. 120

▶ Set VarioSafe straight. *Fig. 120 (1)*
▶ Lift VarioSafe at the front. *Fig. 120 (2)*

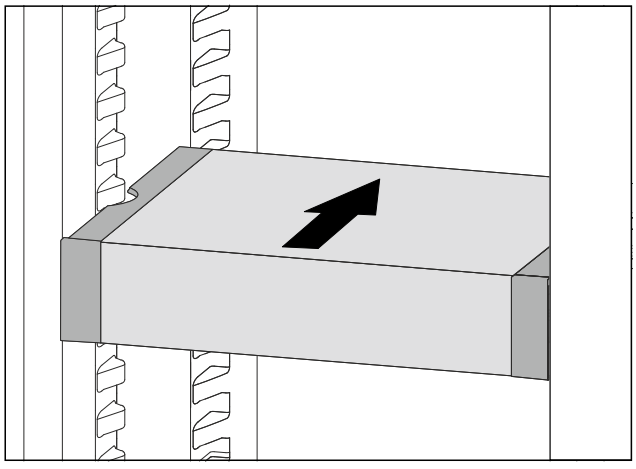

Fig. 121

▶ Lift VarioSafe up toward the front.
▶ Push VarioSafe in to the rear.
▶ Lower VarioSafe.
▷ VarioSafe audibly engages.
▷ VarioSafe is inserted.

8.5.2 Repositioning the VarioSafe

You can move the VarioSafe as a whole in the refrigerator compartment.

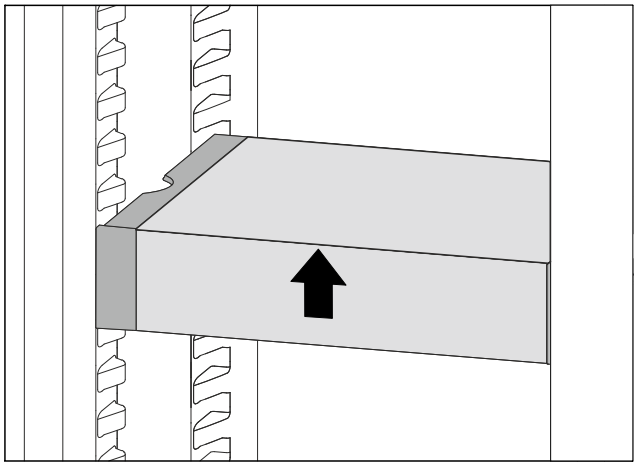

Fig. 122

▶ Lift VarioSafe at the front.

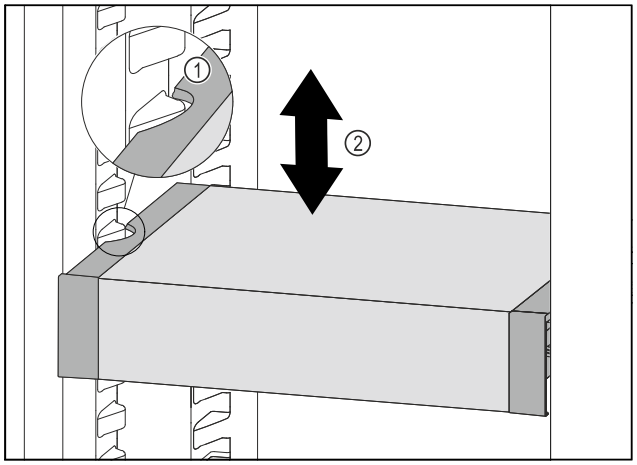

Fig. 123

▶ Pull VarioSafe forwards until the recesses in the side of the VarioSafe are at the level of the support rib in the refrigerator compartment. *Fig. 123 (1)*
▶ Move VarioSafe up or down in the refrigerator compartment until the desired height is reached. *Fig. 123 (2)*

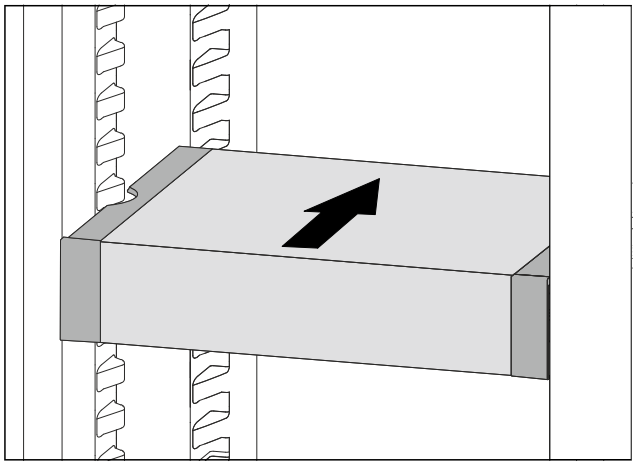

Fig. 124

▶ Lift VarioSafe at the front.
▶ Push VarioSafe in to the rear.
▷ VarioSafe audibly engages.
▷ VarioSafe is offset in height.

8.5.3 Moving the VarioSafe drawer

You can use the VarioSafe drawer at two different heights. If you would like to store taller foodstuffs in the VarioSafe drawer, slide the VarioSafe drawer in on the bottom rib. If you would like to store smaller foodstuffs in the VarioSafe drawer, slide the VarioSafe drawer in on the top rib.

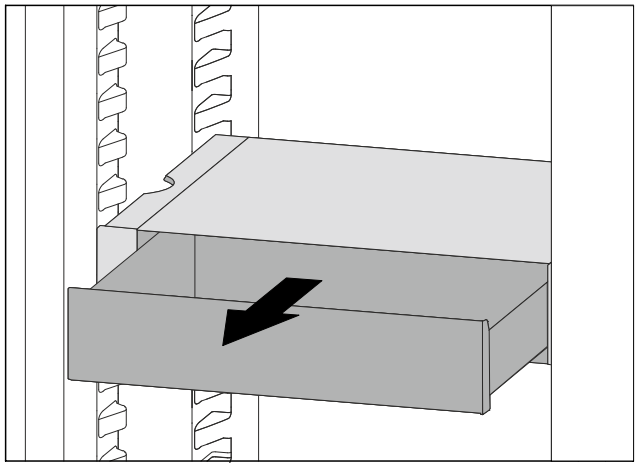

Fig. 125

▶ Pull out the VarioSafe drawer as far as it will go.
▶ Lift the VarioSafe drawer up at the front.
▶ Remove the VarioSafe drawer to the front.

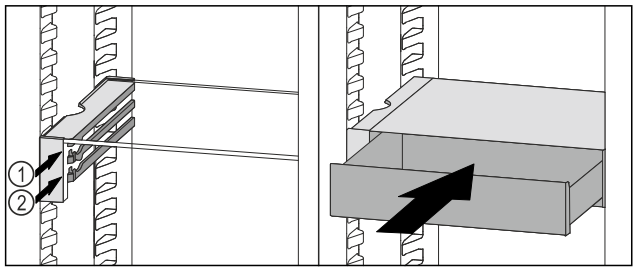

Fig. 126

▶ Lift the VarioSafe drawer up at the front.
▶ Place the VarioSafe drawer behind the stoppers on desired rib *Fig. 126 (1)* or *Fig. 126 (2)*.
▷ VarioSafe drawer is offset in height.

8.5.4 Removing the VarioSafe

You can remove the VarioSafe as a whole.

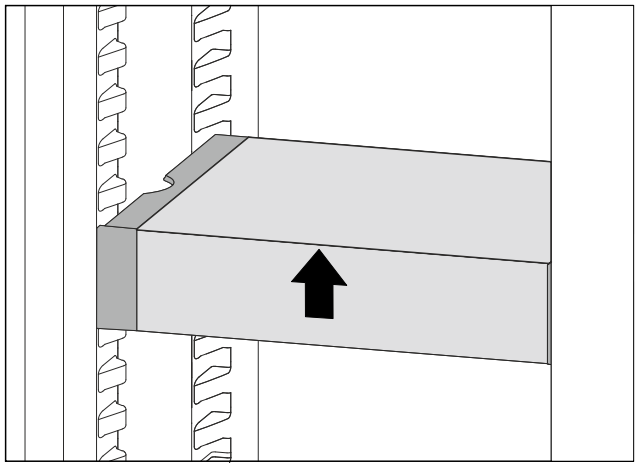

Fig. 127

▶ Lift VarioSafe at the front.

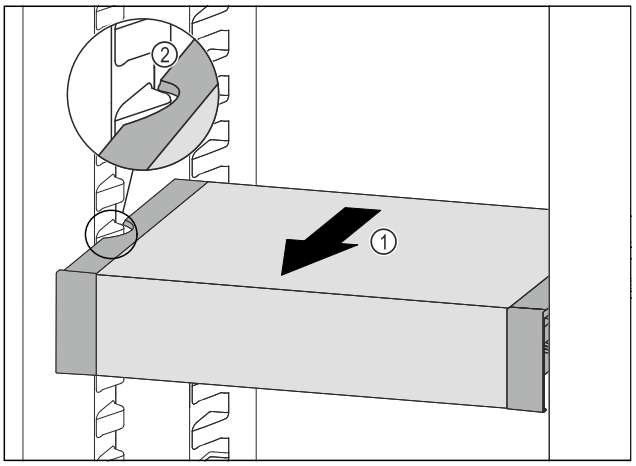

Fig. 128

▶ Pull VarioSafe forwards *Fig. 128 (1)* until the recesses in the side of the VarioSafe are at the level of the support rib in the fridge section. *Fig. 128 (2)*

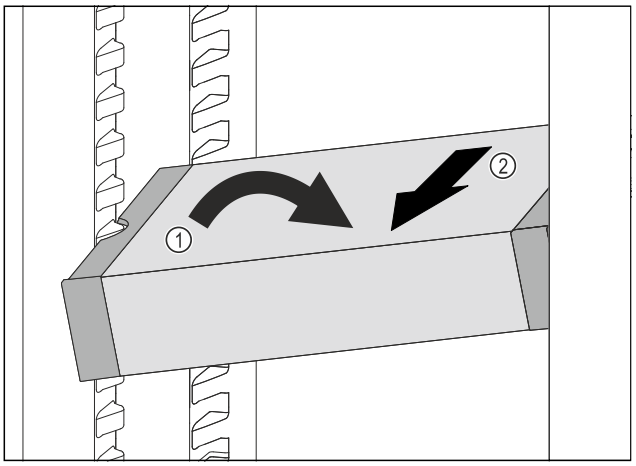

Fig. 129

▶ Set VarioSafe in refrigerator compartment at an angle. *Fig. 129 (1)*
▶ Take VarioSafe out to the front. *Fig. 129 (2)*
▷ VarioSafe is removed.

8.5.5 Disassembling the VarioSafe

You can disassemble the VarioSafe into its individual parts if you want to clean the VarioSafe or if you need to install or remove parts.

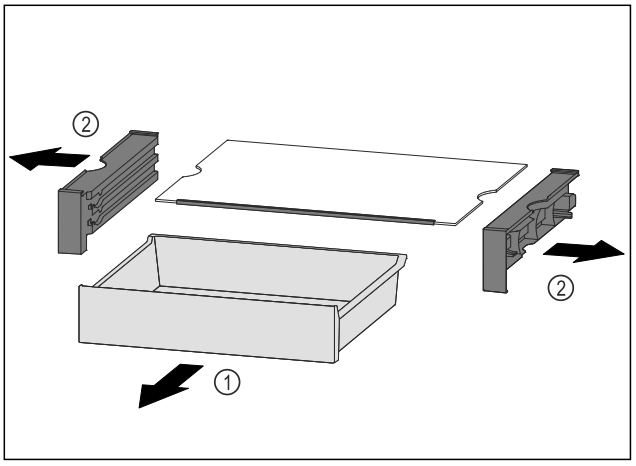

Fig. 130

▶ Remove VarioSafe as a whole. (see 8.5.4 Removing the VarioSafe)
▶ Disassemble VarioSafe according to the illustration.

8.6 InfinitySpring*

The built-in water dispenser is great for drinking water. The water temperature depends on the temperature in the fridge.

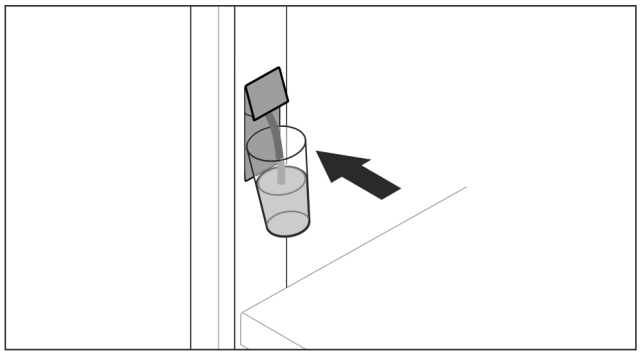

Fig. 131

▶ Push the glass against the bottom pushbutton of the dispenser.
▷ Pouring unit moves out: Water flows into the glass.
▶ Avoid spillages: Remove your cup slowly.
For more water:
▶ If the water flow stops, remove the water tank and push your container against the bottom pushbutton of the dispenser again.

8.7 Space for baking tray

There is space for a baking tray *Fig. 1 (9)* above the drawers.

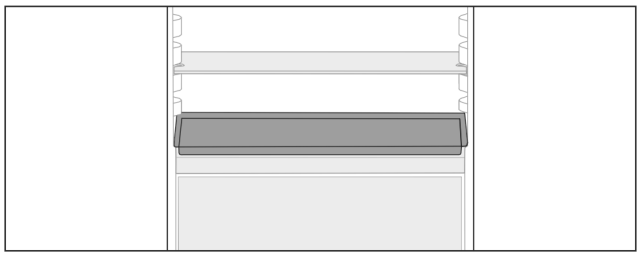

Fig. 132

Ensure that the following conditions are met:

❑ Max. baking tray dimensions are adhered to (see 10.1 Technical specifications) .
❑ Baking tray is cooled to room temperature.
❑ The lowest door rack is set at least one position higher.

With the door open to 90°:
▶ Slide the baking tray onto the lower side runners.
-or-
If baking tray is uneven:
▶ Use the supplied support rails.

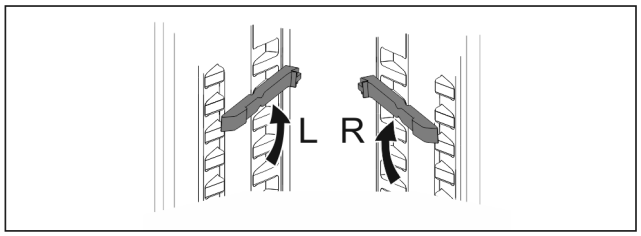

Fig. 133

▶ Snap support rails into the lowest runners.
With the door open to 90°:
▶ Slide the baking tray in on the support rails.

8.8 Adjustable bottle shelf

8.8.1 Using the bottle shelf

In the bottom of the fridge section you can either use the variable bottle shelf or the glass panel.

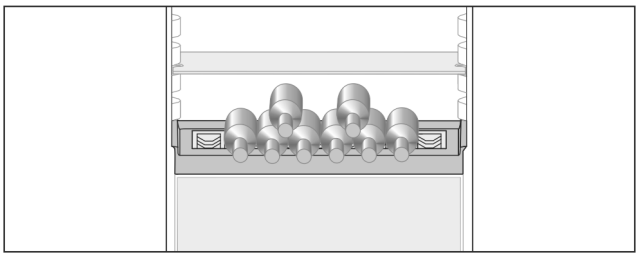

Fig. 134

▶ Remove the glass panel and store in a safe place.
▶ Lay bottles with their base towards the rear wall.

Note
If the bottles are protruding over the front of the bottle shelf:
▶ Move the lower door rack up a place.

8.8.2 Removing the bottle shelf

You can remove the bottle shelf for cleaning.
▶ Remove the glass panel above the bottle shelf.

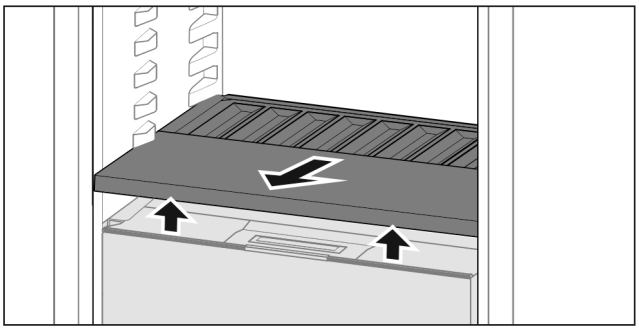

Fig. 135

▶ Lift the bottle shelf at the front and pull out.

Note
Liebherr recommends the following:
Do not place any goods on the drawer cover below.

8.8.3 Inserting the bottle shelf

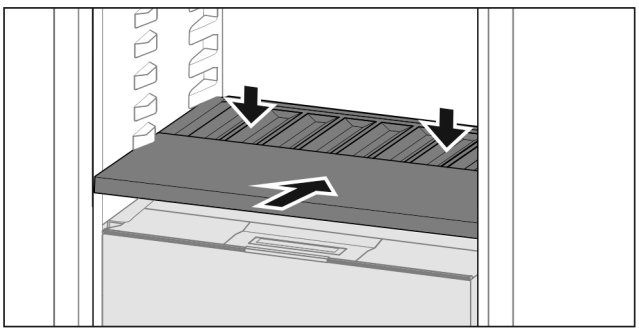

Fig. 136

▶ Slide in the bottle shelf until it engages and push down.
▷ The lugs at the back of the bottle shelf are connected automatically.
▷ LED comes on.

8.9 Drawers

You can remove the drawers for cleaning.

The way to remove/insert the drawers varies depending on the pull-out system. Your appliance can contain various pull-out systems.

Note
The energy consumption increases and the cooling power goes down if ventilation is not sufficient.
▶ Always leave the fan air vents clear on the back wall!

8.9.1 Drawer on telescopic rails

The drawer runs on extendible rails (telescopic rails). There are fully extendible telescopic rails and telescopic rails with partial pull-out. Drawers which are fully extendible can be pulled out fully from the appliance. Drawers with partial pull-out cannot be removed fully from the appliance. The system in your appliance depends on the type of appliance.

Fully extendible*

If you have fully extendible rails, there is a clamp located at the back on the left and right of the rail.

Removing drawer

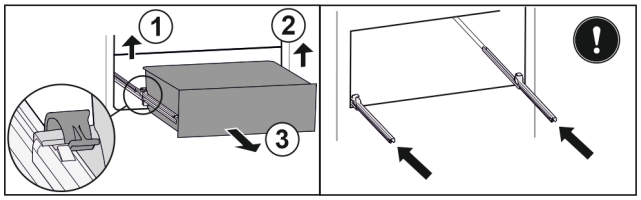

Fig. 137
▶ Pull out drawer as far as it will go.
▶ Lift left clamp and simultaneously pull drawer forwards on the left. *Fig. 137 (1)*
▶ Lift right clamp and simultaneously pull drawer forwards on the right. *Fig. 137 (2)*
▶ Remove drawer to the front. *Fig. 137 (3)*
▶ Slide rails in.

Inserting drawer

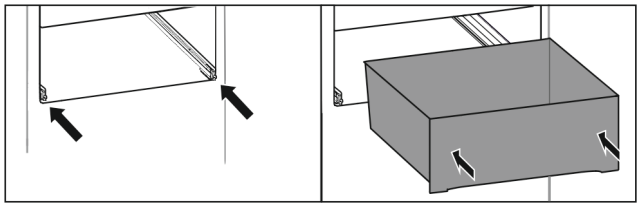

Fig. 138
▶ Slide rails in.
▶ Place drawer on rails.
▶ Slide in drawer to the back.
▷ Drawer latches in audibly at the back.

Partial pull-out fridge compartment*

Removing drawer

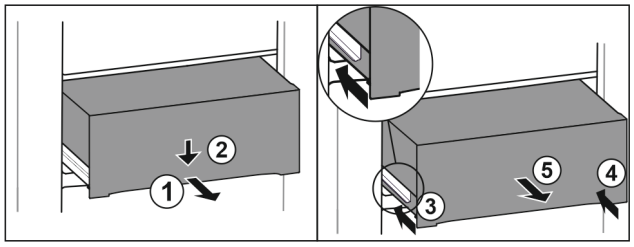

Fig. 139
▶ Pull out drawer half-way. *Fig. 139 (1)*
▶ Push the drawer down at the front. *Fig. 139 (2)*
▶ Push the left rail in by about 2 cm. *Fig. 139 (3)*
▶ Push the right rail in by about 2 cm. *Fig. 139 (4)*
▶ Remove drawer to the front. *Fig. 139 (5)*

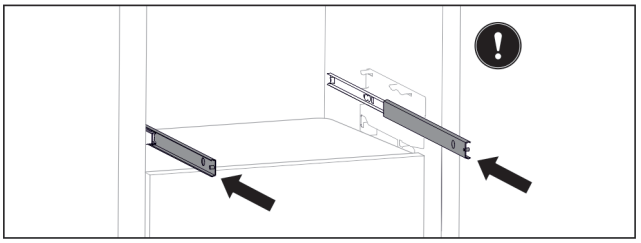

Fig. 140
If the rails are not yet fully inserted after removing the drawer:
▶ Push rails in completely.

Inserting drawer

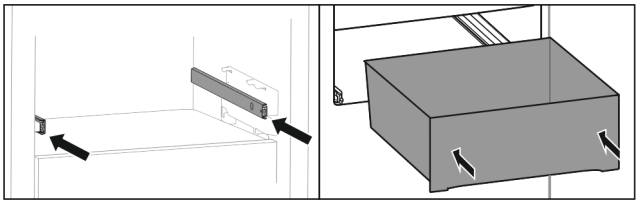

Fig. 141
▶ Slide rails in.
▶ Place drawer on rails.
▶ Slide in drawer to the back.

8.10 Fruit & Vegetable safe cover

You can remove the compartment cover for cleaning.

8.10.1 Removing the compartment cover

Ensure that the following conditions are met:
❑ Bottle shelf is removed (see 8.8 Adjustable bottle shelf) .

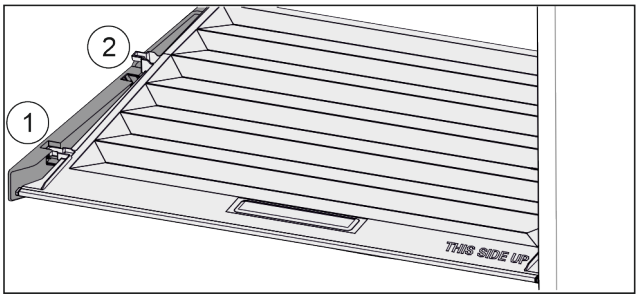

Fig. 142
When the drawers are removed:
▶ Pull the lid up at the front to the opening in the retaining parts *Fig. 142 (1)*.
▶ Lift from the back and pull it up and out *Fig. 142 (2)*.

8.10.2 Inserting the compartment cover

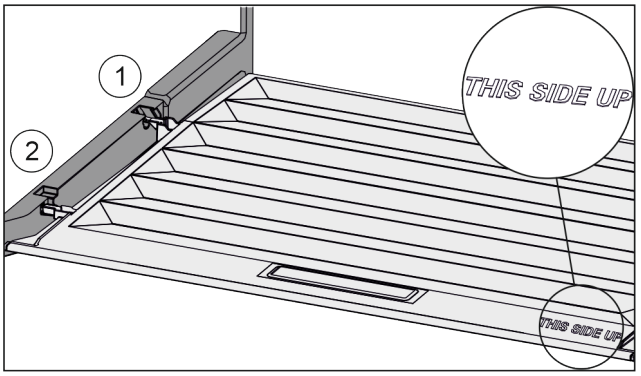

Fig. 143
If the text THIS SIDE UP points upwards:

▶ Insert the lip of the cover over the opening of the rear bracket *Fig. 143 (1)* and click into place *Fig. 143 (2)*.
▶ Position the cover where you want it (see 8.11 Adjusting the moisture levels) .

8.11 Adjusting the moisture levels

You can adjust the moisture in the drawer yourself by adjusting the compartment cover.

The compartment lid is attached to the drawer and can be hidden by a shelf or additional drawers.

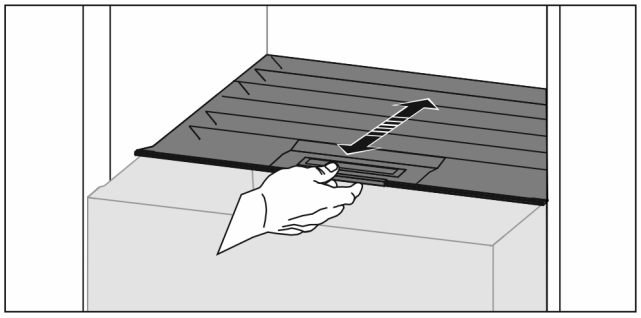

Fig. 144

Low air humidity
▶ Open the drawer.
▶ Slide the compartment cover forwards.
▷ With the drawer closed: Gap between the cover and the compartment.
▶ Switch off HydroBreeze.
▷ The air moisture in the Safe decreases.

High air moisture
▶ Open the drawer.
▶ Slide the cover back.
▷ With the drawer closed: The cover seals the compartment.
▶ Activate the HydroBreeze.
▷ The air moisture in the Safe increases.
If there is too much moisture in the compartment:
▶ Choose the setting “low air moisture”.
-or-
▶ Remove any excess moisture with a cloth.

Note
You can apply the “low air moisture” setting to the Fruit & Vegetable-Safe and the Meat & Dairy-Safe.
▶ Set the “low air moisture” option.

8.12 HydroBreeze

HydroBreeze emits a mist over the refrigerated goods to provide moisture every time the door is opened.

The HydroBreeze and its water tank are located in the adjustable bottle shelf.

Ensure that the following conditions are met:
- The water tank is clean (see 9.7.3 Clean the components) .
- The water tank is properly engaged.
- Moisture is set to “high moisture” (see 8.11 Adjusting the moisture levels) .
- HydroBreeze is on (see HydroBreeze) .

8.12.1 Fill the water tank

WARNING
Unclean water!
Contaminants.
▶ Only fill with drinking water.
▶ The HydroBreeze is off: empty water tank.
▶ The HydroBreeze is no longer in use: empty water tank.

NOTICE
Sugar-content liquids!
Damage to HydroBreeze.
▶ Only fill with drinking water.

Note
Only use filtered, decarbonised water for the best quality drinking water and to make the HydroBreeze, work smoothly.
This water quality can be achieved using a table water filter of the kind available in trade retail outlets.
▶ Only ever fill the water tank with filtered, decarbonised drinking water.

The water tank is built into the adjustable bottle shelf (see 1.2 Overview of appliances and equipment) .

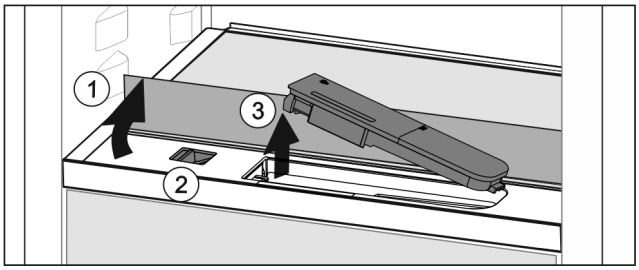

Fig. 145

▶ Press on the back-left corner of the front glass plate.
▷ The glass panel folds up at the front.
▶ Lift the glass panel and fold towards the rear until it clicks into place *Fig. 145 (1)*.
▷ Glass panel stands upright.
▶ Slide the slider *Fig. 145 (2)* to the left.
▷ The water tank jumps out of its recess.
▶ Remove the water tank *Fig. 145 (3)*.
▶ Cleaning the water tank (see 9.7.3 Clean the components) .
Square opening:
▶ Fill with drinking water up to the marker.
▶ Insert the water tank into the recess, bottom first.
▶ Slowly lower the front part and push the tank in.
▷ The water tank is clicked into place.

8.12.2 Dismantling the water tank

You can remove the HydroBreeze water tank for cleaning.

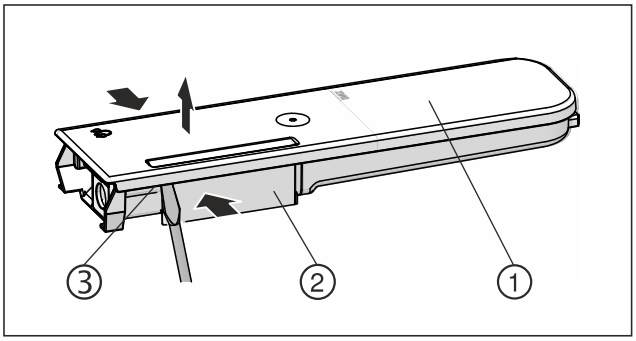

Fig. 146

▶ Push the water tanks *Fig. 146 (2)* together, leverage the cover *Fig. 146 (1)* carefully over the latching tabs *Fig. 146 (3)* and lift it up.
▷ The cover is released.

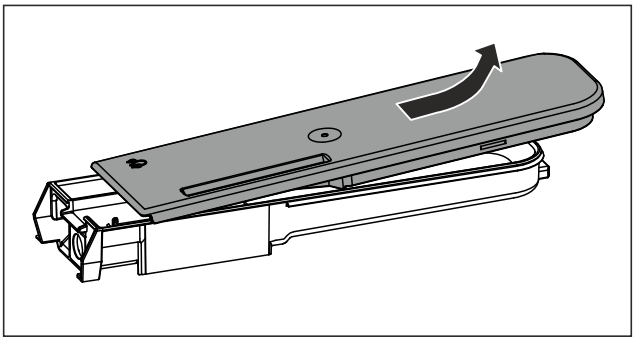

Fig. 147

▶ Move the cover *Fig. 146 (1)* slightly forwards and back, and remove to the top.
▷ The water tank has been dismantled.

8.13 Butter dish

8.13.1 Opening/closing the butter dish

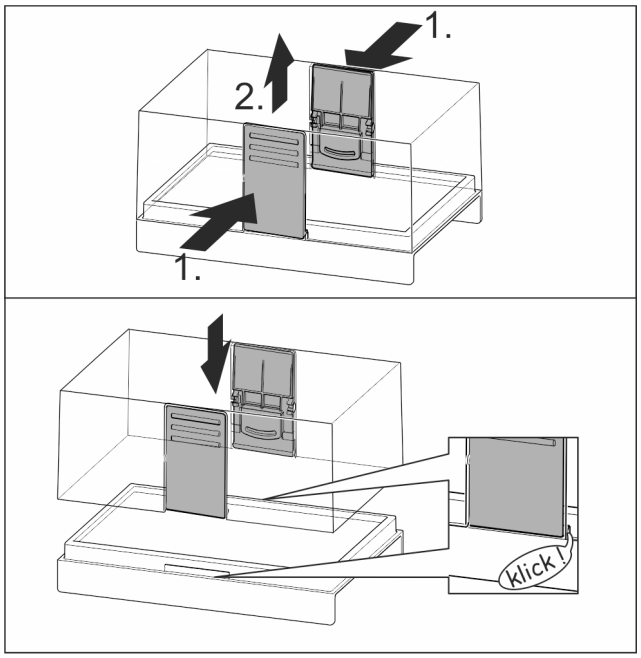

Fig. 148

8.13.2 Dismantling the butter dish

You can take the butter dish apart for cleaning.

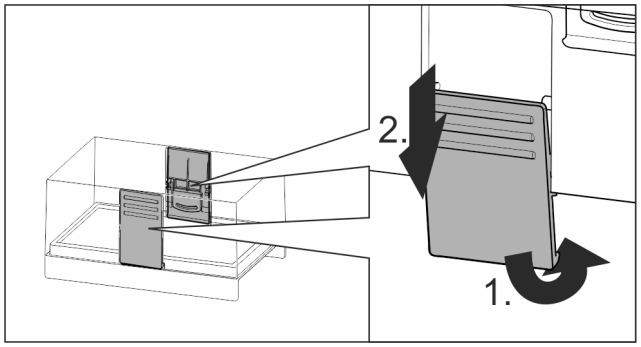

Fig. 149

▶ Disassembling the butter dish.

8.14 Egg rack

You can pull out and turn the egg rack. You can use both sides of the egg rack so you can label specifics like the purchase date.

8.14.1 Using the egg rack

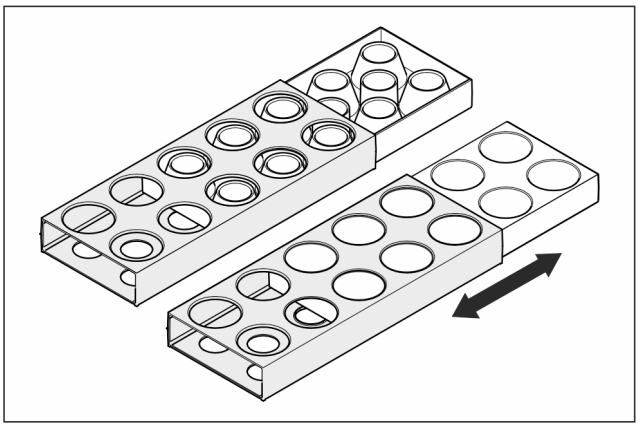

Fig. 150

▶ Top layer: for storing hen eggs.
▶ Bottom layer: for storing quail eggs.

8.15 Bottle holder

8.15.1 Using the bottle holder

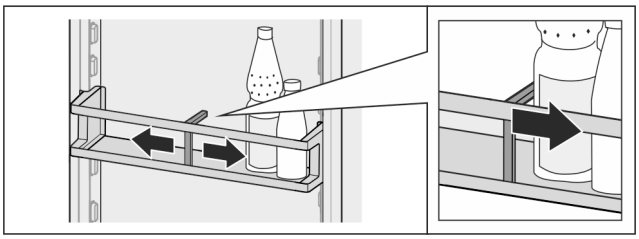

Fig. 151

▶ Push the bottle holder onto the bottles.
▷ The bottles are prevented from falling over.

8.15.2 Removing the bottle holder

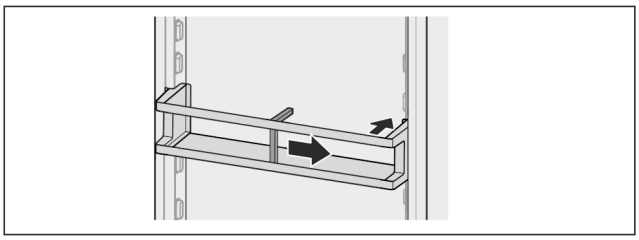

Fig. 152

▶ Move the bottle holder all the way to the right.
▶ Push the bottle holder to the back to remove.

8.16 FlexSystem

8.16.1 Using the FlexSystem

The FlexSystem helps you store and organise your food in a clear and flexible way. It lets you clearly divide your food into fruit, vegetables or by use-by dates, for example.

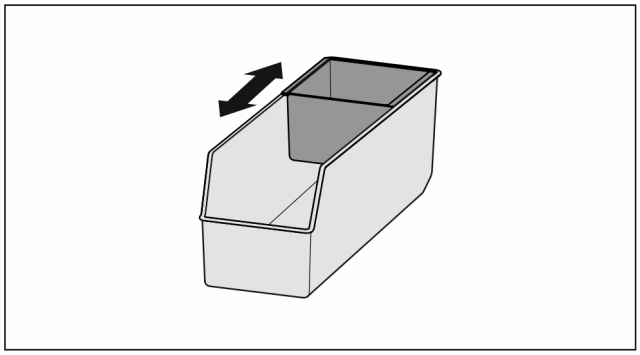

Fig. 153

▶ Move the inner shell.

8.16.2 Removing the FlexSystem

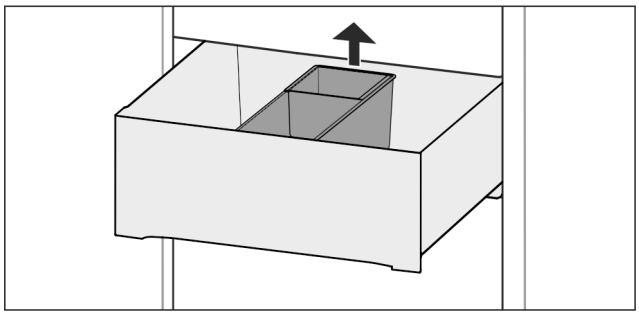

Fig. 154

▶ Lift the FlexSystem from the back.
▶ Pull up and out.

8.16.3 Inserting the FlexSystem

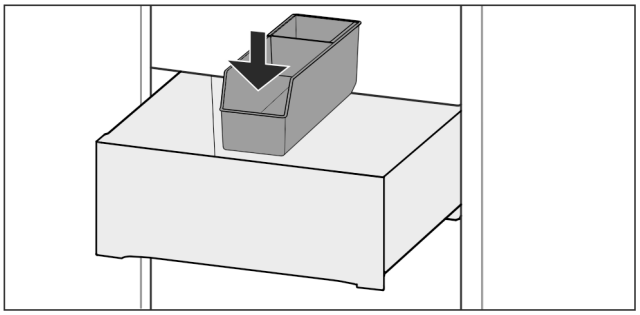

Fig. 155

▶ Insert the FlexSystem front-first.
▶ Lower the rear part.

8.16.4 Disassembling the FlexSystem

You can take the FlexSystem apart for cleaning.

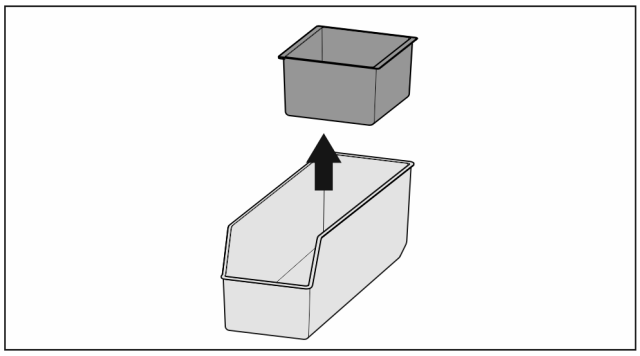

Fig. 156

▶ Disassembling the FlexSystem

9 Maintenance

9.1 FreshAir carbon filter

The FreshAir carbon filter is in the compartment above the fan.

It guarantees the best air quality.

❑ Replace the carbon filter every 6 months.
When the reminder is set, a message on the display prompts you to change it.
❑ The carbon filter can be disposed of with the regular household waste.

Note
FreshAir activated charcoal filters can be purchased from the Liebherr-Hausgeräte store at home.liebherr.com/shop/de/deu/zubehor.html.

9.1.1 Removing the FreshAir carbon filter

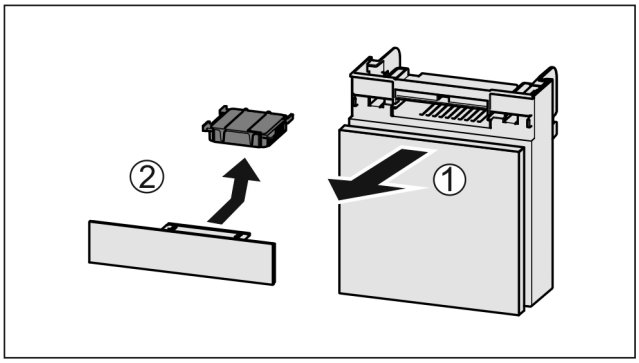

Fig. 157

▶ Pull out the compartment *Fig. 157 (1)*.
▶ Remove the carbon filter *Fig. 157 (2)*.

9.1.2 Inserting the FreshAir carbon filter

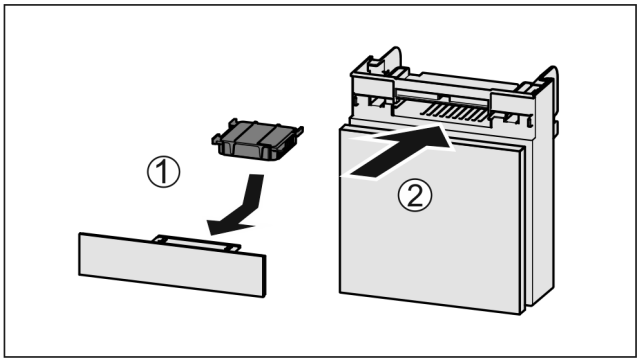

Fig. 158

▶ Insert the carbon filter as shown in the diagram *Fig. 158 (1)*.
▷ The carbon filter clicks into place.
If the carbon filter is pointing downwards:
▶ Push the compartment in *Fig. 158 (2)*.
▷ The carbon filter is now ready for use.

9.2 Water tank*

The InfinitySpring water tank is located behind the lowest drawer.*

9.2.1 Removing the water tank

▶ Turn off the tap.
▶ Drain the InfinitySpring for 30 seconds and collect remaining water using a glass.*

* Depending on model and options

▶ Remove the drawer compartment.
▶ Turn the water tank all the way anti-clockwise and pull it out.
▷ Water dripping out is collected in the drip tray.
▶ Empty out the water from the drip tray.*
▶ Clean the drip tray with a cloth or in the dishwasher.*

9.2.2 Inserting the water tank

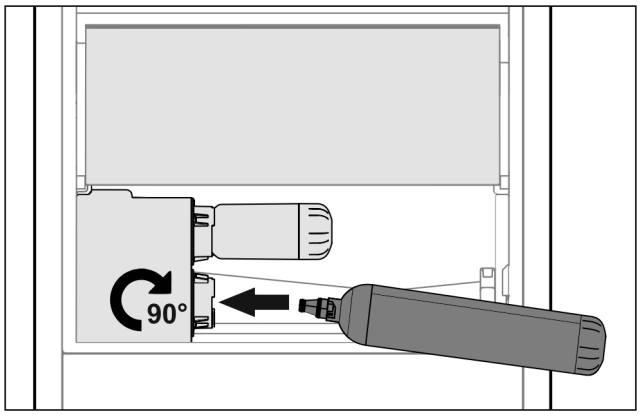

Fig. 159

▶ Remove the drawer compartment.
▶ Insert the water tank and rotate approx. 90° clockwise until it clicks in.
▶ Check that the tank is sealed and no water leaks out.
▶ Insert the drawer compartment.
▶ Turn on the tap.
▶ Bleed the water system. (see 4.2.1 Bleeding the water system) *

Instead of the water filter you can insert an additional water tank.*

Note
You can purchase this water tank as an optional extra.

9.2.3 Removing / inserting the drip tray*

You can remove the drip tray for cleaning.

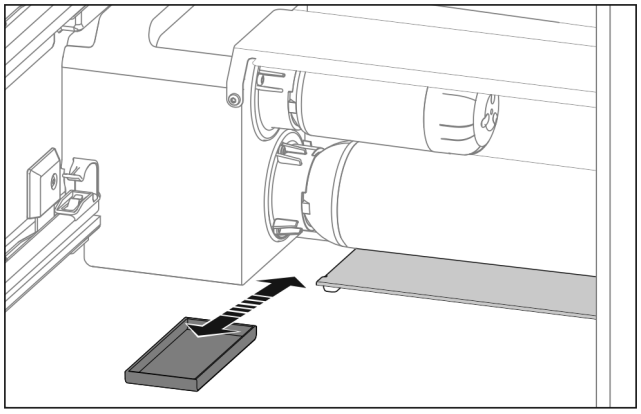

Fig. 160

▶ Pull out the drip tray to the front.

9.3 Water filter*

The water filter is located behind the lowest drawer.

It filters out deposits in the water and reduces the taste of chlorine.

❑ Replace the water filter at least every 6 months, or if there is a significant reduction in the flow rate.
❑ The water filter contains carbon and can be disposed of with the regular household waste.

Note
Water filters are available from the Liebherr-Hausgeräte store at home.liebherr.com/shop/de/deu/zubehor.html.

9.3.1 Removing the water filter

▶ Remove the drawer compartment.
▶ Turn the water filter all the way anti-clockwise and pull it out.
▷ Water dripping out is collected in the drip tray.
▶ Clean the drip tray with a cloth or in the dishwasher.

9.3.2 Inserting the water filter

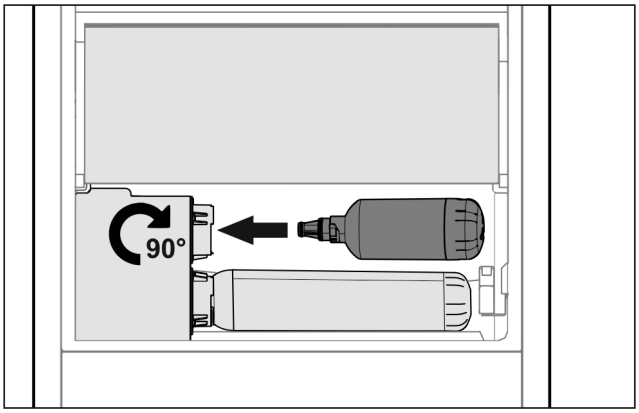

Fig. 161

▶ Remove the drawer compartment.
▶ Insert the water filter and rotate approx. 90° clockwise until it clicks in.
▶ Check that the filter is sealed and no water leaks out.
▶ Insert the drawer compartment.

CAUTION
New water filters can contain suspended matter.
▶ Draw 3 l of water from the InfinitySpring and dispose of it.

▷ The water filter is now ready for use.

9.4 Disassembling / assembling pull-out systems

9.4.1 Notes on disassembly

You can disassemble some of the pull-out systems for cleaning. Your appliance can contain a variety of pull-out systems.

The following pull-out systems can be disassembled or cannot be disassembled:

Pull-out system	can be disassembled / cannot be disassembled
Fully extendible*	cannot be disassembled*
Partial pull-out fridge compartment*	cannot be disassembled*

9.5 Defrosting the appliance

WARNING
Improper defrosting of the appliance!
Injuries and damage.
- ▶ Do not use mechanical equipment or other methods to speed up the defrosting process other than those recommended by the manufacturer.
- ▶ Do not use electrical heating or steam-cleaning appliances, naked flames or defroster sprays to defrost.
- ▶ Do not use sharp objects to remove ice.

Defrosting is performed automatically. The water from the thawing process drains through the outlet and evaporates.
- ▶ Clean the drain opening at regular intervals. (see 9.7 Cleaning the appliance)

9.6 Defrosting the freezer compartment manually*

A layer of frost or ice forms after prolonged use.

The following factors promote the formation of frost or ice:
- The appliance is opened frequently.
- Hot food is put in.

▶ Switch the appliance off.
▶ Pull the mains plug out of the socket or switch the fuse off.
▶ Wrap the frozen food in newspaper or blankets and store in a cool place.

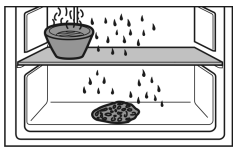

▶ Place a pan of hot water (not boiling) on the middle shelf.
▷ This speeds up the defrosting process.
▶ Leave the compartment and appliance door open during defrosting.
▶ Remove loosened pieces of ice.
▶ Soak up the melted ice water with a sponge or cloth several times as necessary.
▶ Clean the appliance. (see 9.7 Cleaning the appliance)

9.7 Cleaning the appliance

9.7.1 Ready

WARNING
Danger of electric shock!
- ▶ Remove the refrigerator connector or interrupt the power supply.

WARNING
Risk of fire
- ▶ Do not damage the refrigeration circuit.

▶ Empty the appliance.
▶ Remove mains connector.
-or-
▶ Activate CleaningMode. (see CleaningMode)

9.7.2 Cleaning the interior

NOTICE
Improper cleaning!
Damage to the appliance.
- ▶ Only use soft cleaning cloths and ph-neutral all-purpose cleaners.
- ▶ Do not uses abrasive sponges or steel wool which may cause scratches.
- ▶ Do not use any sharp or abrasive cleaning agents, nor any that contain sand, chloride or acid.

- ▶ Plastic surfaces: clean by hand with a soft clean cloth, lukewarm water and a little detergent.
- ▶ Metal surfaces: clean by hand with a soft clean cloth, lukewarm water and a little detergent.
- ▶ Drain hole: remove deposits using a thin item (for example a cotton bud).

9.7.3 Clean the components

NOTICE
Improper cleaning!
Damage to the appliance.
- ▶ Only use soft cleaning cloths and ph-neutral all-purpose cleaners.
- ▶ Do not uses abrasive sponges or steel wool which may cause scratches.
- ▶ Do not use any sharp or abrasive cleaning agents, nor any that contain sand, chloride or acid.

Clean with a soft, clean cloth, lukewarm water and some detergent:
- VarioSafe
- Fruit & Vegetable safe cover
- Drawer
- Adjustable bottle shelf
- FlexSystem

Clean with a damp cloth:
- Retractable rails
  Please note: The grease in the tracks is used for lubrication and must not be removed!

Wash in the dishwasher up to 60 °C:
- Door rack
- VarioBox
- Bottle rack
- Shelf
- Dividing shelf
- Holder of the dividing shelf
- HydroBreeze water tank and water tank lid
- Drip tray*
- Egg rack
- Butter dish

▶ To disassemble components: see the relevant section.
▶ Clean the components.

9.7.4 Cleaning the InfinitySpring *

You can clean the InfinitySpring outlet and around it without disconnecting the appliance from the mains.

Cleaning is required in the following cases:
❑ Initial operation
❑ If out of use for more than 5 days.

▶ Press the bottom pushbutton of the dispenser.
▷ The outlet unit moves out.
▶ Clean the water outlet and around it with a soft, clean cloth, lukewarm water and some detergent.
▶ Release the bottom pushbutton.
▶ Draw and dispose of 2 l water at the InfinitySpring.*

9.7.5 Cleaning the HydroBreeze

Cleaning is required in the following cases:

❑ Initial operation
❑ HydroBreeze is off for more than 48 hours.
❑ Refill the water tank.

Ensure that the following conditions are met:

❑ HydroBreeze is off (see HydroBreeze) .
❑ Water tank has been removed and cleaned in the dishwasher.

▶ Wipe out the recess with a damp cloth.
▶ Insert the water tank.
▶ Activate the HydroBreeze.

9.7.6 After cleaning

▶ Wipe the appliance and the components dry.
▶ Connect and switch on the appliance.
The temperature is cold enough:
▶ Place the food inside.
▶ Repeat cleaning regularly.

10 Customer help

10.1 Technical specifications

Temperature range	
Cooling	3 °C to 9 °C
BioFresh	0 °C to 3 °C

Maximum freezing quantity/24 h	
Freezer compartment*	See “Freezing capacity .../24 h” on the type plate*

Maximum size baking tray	
Width	466 mm
Depth	386 mm
Height	50 mm

Lighting	
Class[1]	Light source
This product contains one or more energy efficiency class G light sources.	LED

[1] *The appliance may contain light sources with different energy efficiency classes. The lowest energy efficiency class is indicated.*

For appliances with a WiFi connection:

Frequency specification	
Frequency band	2.4 GHz
Maximum radiated power	< 100 mW
Purpose of the wireless equipment	Integration in the local WiFi network for data communication

10.2 Operating noises

The appliance makes different noises when it is on.

- At **higher temperatures** the appliance uses less energy but works for longer. It is **quieter**.
- At **lower temperatures** the food is cooled faster. It is **louder**.

Examples:

- Functions on (see 7.2 Appliance functions)
- Fan running
- Food recently added
- High ambient temperature
- Door open for a while

Noise	Possible cause	Type of noise
Bubbling and splashing	Coolant flowing into the cooling circuit.	Normal operating noise
Hissing	Coolant sprays into the cooling circuit.	Normal operating noise
Humming	The appliance is cooling. The volume depends on the cooling output.	Normal operating noise
Suction noises	Soft-closing door is being opened and closed.	Normal operating noise
Humming and rustling	The fan is running.	Normal operating noise
Clicking	Components are switched on and off.	Normal switching noise
Rattling or humming	Valves or flaps are working.	Normal switching noise

Noise	Possible cause	Type of noise	Lifting
Vibration	Improper installation	Defective noise	Check the installation. Level the appliance.
Rattling	Components, items inside the appliance	Defective noise	Secure components. Leave enough space between the items.

10.3 Technical fault

Your appliance is designed and built to ensure it works reliably and has a long service life. In the unlikely event that a fault occurs during operation, please check whether it is due to an operating error. If so, you will be charged for the callout and repair costs even if it falls within the warranty period.

You can fix the following faults yourself.

10.3.1 Appliance function

Defect	Cause	Remedy
The appliance is not working.	→ The appliance is not switched on.	▶ Switch the appliance on.
	→ The power plug is not properly plugged into the socket.	▶ Check the power plug.
	→ There is something wrong with the power outlet fuse.	▶ Check the fuse.
	→ Power cut	▶ Keep the appliance closed. ▶ Protecting food: Lay freezer packs on top of the food or use another freezer if the power is off for a prolonged period. ▶ Do not re-freeze defrosted food,
	→ The appliance plug does not fit the appliance properly.	▶ Check the appliance plug.
Temperature is not cold enough.	→ The appliance door is not closed properly.	▶ Close the appliance door.
	→ Not enough ventilation.	▶ Keep ventilation grille clear, and clean it.
	→ The ambient temperature is too high.	▶ Problem solution: (see 1.5 Appliance range of use)
	→ The appliance was opened too many times or for too long.	▶ Wait to see if the required temperature corrects itself. If not, contact Customer Service. (see 10.4 Customer Service)
	→ The temperature is set incorrectly.	▶ Turn down the temperature and check after 24 hours.
	→ The appliance is too close to a heat source (oven, radiator, etc).	▶ Move the appliance or the heat source.
	→ The appliance was not correctly installed in the recess.	▶ Check if the appliance was installed correctly and that the door closes properly.
The door seal is defective or needs to be replaced for another reason.	→ The door seal can be replaced. It can be replaced without the need for special tools.	▶ Contact Customer Service. (see 10.4 Customer Service)
The appliance builds up too much ice or condensation.	→ The door seal may have slipped out of its groove.	▶ Check that the door seal is well fitted in the groove.

10.3.2 Features

Defect	Cause	Remedy
The InfinitySpring is not working.*	→ There is air in the water system.	▶ Vent the water system (see the Installation Instructions, Water Connection).
	→ The water connection is not open.	▶ Open the water connection.*
The water flow through the InfinitySpring is irregular.*	→ The aerator is dirty.	▶ Replace aerator. Contact Customer Service. (see 10.4 Customer Service)
HydroBreeze is not keeping refrigerated goods moist.	→ The HydroBreeze is not on.	▶ Activate the HydroBreeze.
	→ There is not enough water in the water tank.	▶ Fill the water tank.
	→ There is dirt in front of the concentrator.	▶ Clean the HydroBreeze.

Defect	Cause	Remedy
	→ The water tank is not clicked into place properly.	▶ Click the water tank into place.
	→ The cover of the Fruit & Vegetable-Safe is in “low air moisture” mode.	▶ Set the Fruit & Vegetable-Safe to the “high air moisture” mode.
The internal light does not come on.	→ The appliance is not switched on.	▶ Switch the appliance on.
	→ The door was open for longer than 15 minutes.	▶ Interior lighting turns off automatically after approx. 15 min. with the door open.
	→ The LED interior light is faulty or the lid is damaged.	▶ Contact Customer Service. (see 10.4 Customer Service)
The freezer compartment cannot be closed.*	→ The lock is on when the door is open.	▶ Use the handle again.

Auto Door

AutoDoor FAQ

Defect	Cause	Remedy
The door opens at a different speed.	→ The speed of the door depends on how much is stored in it.	▶ No action is required.
The motor stops and the door does not close.	→ There are objects blocking the door.	▶ Remove the objects. ▶ Push the drawers all the way in. ▶ Wait a while. ▶ Move the door manually.
	→ The mechanism is blocked.	▶ To avoid damaging the hinge: Do not move the door against the motor. ▶ Contact Customer Service. (see 10.4.1 Contacting Customer Service)
	→ The motor is overheated.	▶ Let the motor cool down. ▶ Wait a while. ▶ Move the door manually.
The door opening angle cannot be saved.	→ The selected door opening angle is too small.	▶ Set a different door opening angle: Select a door opening angle of at least 70°. Liebherr recommends at least 90°, so that you can easily pull out the drawers. (see Auto-Door)
The door does not respond to knocking.	→ You are not knocking hard enough.	▶ Increase the sensitivity of the knocking sensor. The knocking sensor is on the hinge side on the narrow side of the door. (see the installation instructions)
	→ The knocking function is not activated.	▶ Activate the AutoDoor function. (see AutoDoor)
The door does not close by voice command.	→ The voice assistant is not set up.	▶ Set up the voice assistant. (see AutoDoor)
	→ You can find detailed information and tutorials at:	▶ home.liebherr.com/faq-autodoor

10.4 Customer Service

First check whether you can rectify the fault yourself (see 10 Customer help) . If you cannot rectify the problem, contact Customer Service.

You can find the address in the enclosed brochure “Liebherr-Service” or at home.liebherr.com/service.

WARNING
Unprofessional repair!
Injuries.
- ▶ Have any repairs and action - not expressly specified - on the appliance and mains cable carried out by service personnel only. (see 9 Maintenance)
- ▶ A damaged mains cable may only be replaced by the manufacturer, the manufacturer's Customer Service or a similarly qualified person.
- ▶ In the case of appliances with an IEC connector, the change may be made by the customer.

10.4.1 Contacting Customer Service

Make sure that the following appliance information is available:

- ❑ Appliance name (model and index)
- ❑ Service no. (Service)
- ❑ Serial no. (S no.)

▶ Call up the appliance information via the display. (see Device information)

-or-

▶ Refer to the type plate for appliance information. (see 10.5 Model plate)

▶ Note down the appliance information.
▶ Notify customer service: Report errors and the appliance information.
▷ This will help us to provide you with a faster, more accurate service.
▶ Follow further instructions from Customer Service.

10.5 Model plate

The model plate is behind the drawers on the inside of the appliance.

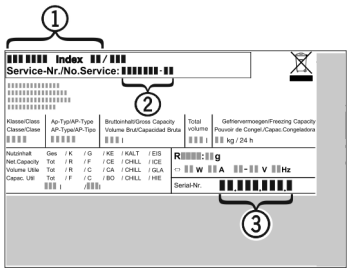

Fig. 162

(1) Appliance description **(3)** Serial no.
(2) Service no.

▶ Note the data on the model plate.

11 Shutting down

▶ Empty the appliance.
▶ Deactivate HydroBreeze. (see Deactivating HydroBreeze)
▶ Switch off appliance. (see Switching the appliance off and on)
▶ Pull the mains plug out of the socket.
▶ Remove the IEC socket if required: Pull the IEC socket out of the appliance plug and move it to the left and right at the same time.
▶ Clean appliance. (see 9.7 Cleaning the appliance)
▶ Leave the door open, so that no unpleasant odours arise.

12 Disposal

12.1 Preparing appliance for disposal

Li-Ion

Liebherr uses batteries in some of its appliances. In the EU, for environmental reasons, legislation obliges the end user to remove these batteries before disposing of old appliances. If your appliance contains batteries, a corresponding notice is attached.

Lamps — If you can remove the lamps yourself without destroying them, also remove these before disposal.

▶ Take the appliance out of operation.
▶ Appliances with batteries: remove the batteries. For description, see **Maintenance** chapter.
▶ If possible: remove lamps without destroying them.

12.2 Disposing of the appliance in an environmentally friendly manner

The appliance still contains valuable materials and must be disposed of separately from unsorted municipal waste.

Li-Ion Li-Ion

Dispose of batteries separately from the old appliance. To do this, you can return the batteries free of charge to retailers as well as recycling centres and collection centres for recyclable materials.

Lamps — Dispose of removed lamps via the respective collection systems.

For Germany: — You can dispose of the appliance free of charge via the class 1 collection containers at the local recycling and recyclable material collection centres. When purchasing a new fridge/freezer, if the sales area > 400 m^2, retailers will also take back the old appliance free of charge.

WARNING
Leaking coolant and oil!
Fire. The coolant contained in the appliance is eco-friendly, but also flammable. The oil contained in the appliance is flammable. Escaping coolant and oil can ignite if the concentration is high enough and in contact with an external heat source.
▶ Do not damage the pipelines of the coolant circuit and the compressor.

▶ Observe the notes on transporting the appliance.
▶ Transport the appliance without damaging it.
▶ Dispose of batteries, lamps and the appliance according to the above specifications.



home.liebherr.com/fridge-manuals

EN integrated fridge with BioFresh

Issue date: 20240527

Part number index: 7088408-00

Liebherr-Hausgeräte GmbH
Memminger Straße 77-79
88416 Ochsenhausen
Deutschland