User Guide

Quality, Design and Innovation

home.liebherr.com/fridge-manuals

LIEBHERR

Contents

1 Appliance at a glance..... 3
1.1 Scope of delivery..... 3
1.2 Overview of appliances and equipment..... 3
1.3 SmartDevice..... 3
1.4 Appliance range of use..... 4
1.5 Conformity..... 4
1.6 SVHC substances according to REACH regulation. 4
1.7 EPREL database..... 4

2 General safety instructions..... 4

3 Functionality of the Touch & Swipe display..... 6
3.1 Navigation and symbol explanation..... 6
3.2 Menus..... 6
3.3 Sleep mode..... 7

4 Putting into operation..... 7
4.1 Switching on appliance (first use)..... 7
4.2 Starting the IceMaker for the first time..... 7

5 Storage..... 7
5.1 Information regarding storage..... 7
5.2 Freezer compartment..... 8
5.3 Storage times..... 8

6 Saving energy..... 9

7 Controls..... 9
7.1 Controls and displays..... 9
7.1.1 Status display..... 9
7.1.2 Display symbols..... 9
7.2 Appliance functions..... 9
7.2.1 Notes on the appliance functions..... 9
Turn off appliance..... 9
WiFi..... 9
Temperature..... 10
Temperature unit..... 11
SuperFrost..... 11
Start defrosting cycle..... 11
PartyMode..... 11
SabbathMode..... 12
EnergySaver..... 13
IceMaker / MaxIce..... 13
IceMaker water supply..... 14
TubeClean..... 14
Display brightness..... 15
Door alarm..... 15
Input lock..... 16
Language..... 16
Device information..... 16
Software..... 16
Reminder..... 17
Demo mode..... 17
Resetting to factory settings..... 18
7.3 Fault messages..... 18
7.3.1 Warnings..... 18
7.3.2 Message..... 19

8 Features..... 19
8.1 Drawers..... 19
8.2 Pull-out board with IceTower..... 20
8.3 Glass shelves..... 22
8.4 IceMaker..... 22
8.5 VarioSpace..... 23
8.6 Freezer pack..... 23
8.7 Flexible ice compartment divider..... 23

9 Maintenance..... 23
9.1 Disassembling / assembling pull-out systems..... 23
9.2 Defrosting the appliance..... 26
9.3 Cleaning the appliance..... 26

10 Customer help..... 26
10.1 Technical specifications..... 26
10.2 Operating noises..... 27
10.3 Technical fault..... 27
10.4 Customer Service..... 29
10.5 Model plate..... 29

11 Shutting down..... 29

12 Disposal..... 29
12.1 Preparing appliance for disposal..... 29
12.2 Disposing of the appliance in an environmentally friendly manner..... 29

The manufacturer is continually working on the further development of all types and models. Please be aware that we reserve the right to make changes to the shape, equipment and technology.

Symbol	Explanation
	**Read instructions** Please read the information in these instructions carefully to understand all of the benefits of your new appliance.
	**Full instructions on the internet** You can find detailed instructions on the internet using the QR code on the front of these instruction or by entering the service number at **home.liebherr.com/fridge-manuals**. The service number can be found on the serial tag: 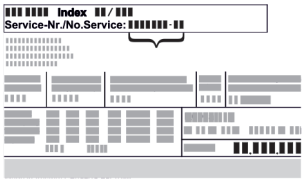 *Fig.* Example illustration

*** Depending on model and options**

Symbol	Explanation
	Check appliance Check all parts for transport damage. If you have any complaints, please contact your agent or customer service.
	Differences These instructions apply to a range of models, so differences are possible. Sections that apply to certain models only are marked with an asterisk (*).
	Instructions and results Instructions are marked with a ▶. Results are marked with a ▷.
	Videos Videos about the appliances are available on the YouTube channels of Liebherr-Hausgeräte.

These operating instructions apply to:

SIFN..i	5188
SIFNbsdi	5188

Note
If your appliance has an N in its appliance designation, it is a NoFrost appliance.

1 Appliance at a glance

1.1 Scope of delivery

Check all parts for transport damage. Contact your dealer or customer service in the event of complaints. (see 10.4 Customer Service)

Your new appliance comes with the following parts:

- Built-in appliance
- Features (depending on the model)
- Installation materials (depending on the model)
- “Quick Start Guide”
- “Installation Guide”
- Service Brochure

1.2 Overview of appliances and equipment

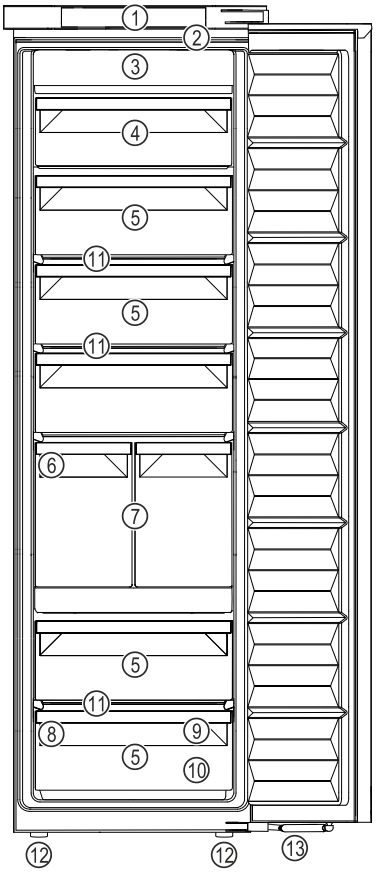

Fig. 1 Example illustration

(1) Controls
(2) Lighting
(3) NoFrost
(4) Tilting drawer
(5) Drawer
(6) IceMaker
(7) IceTower
(8) Type plate
(9) Freezer tray, cold storage accumulator
(10) Ice cube scoop
(11) VarioSpace
(12) Adjusting feet
(13) Soft-closing mechanism

Note
▶ Shelves, drawers and baskets are arranged for optimum energy efficiency when the appliance is delivered. Changing how the shelves, for example, are inserted in the fridge compartment does not have any impact on energy consumption.

1.3 SmartDevice

SmartDevice is the networking solution for your freezer.

If your appliance SmartDevice-enabled or compatible, you can quickly and easily connect your appliance to your WiFi. With the SmartDevice app, you can operate your appliance from a mobile device. Additional functions and setting options are available in the SmartDevice SmartDevice app.

SmartDevice-enabled appliance:	Your appliance is capable of being a SmartDevice. To be able to connect your device to WiFi, you need to download the SmartDevice app.



More information about SmartDevice: **smartdevice.liebherr.com**

Downloading the SmartDevice app:

After installing and configuring the SmartDevice, you can connect your appliance to the WiFi using the SmartDevice app and the WiFi appliance function (see WiFi) .

Note
The SmartDevice function is not available in the following countries: Russia, Belarus, Kazakhstan.

1.4 Appliance range of use

Intended use

The appliance is only suitable for cooling food products in a domestic or household-like environment. This includes, for example, use:

- in staff kitchens, bed and breakfast establishments,
- by guests in country houses, hotels, motels and other accommodation,
- for catering and similar services in the wholesale trade.

All other types of use are not permitted.

Foreseeable misuse

The following applications are expressly forbidden:

- Storing and refrigerating medicines, blood plasma, laboratory preparations or similar substances and products based on the Medical Device Directive 2007/47/EC
- Use in areas at risk of explosions

Misusing the appliance may lead to damage to the goods stored or they may spoil.

Climate classifications

Depending on the climate classification the appliance is designed to operate in restricted ambient temperatures. The climate classification applying to your appliance is printed on the rating plate.

Note

▶ Keep to the specified ambient temperatures in order to guarantee that the appliance works properly.

Climate classification	for ambient temperatures of
SN	10 °C to 32 °C
N	16 °C to 32 °C
ST	16 °C to 38 °C
T	16 °C to 43 °C
SN-ST	10 °C to 38 °C
SN-T	10 °C to 43 °C

1.5 Conformity

The refrigerant circuit has been tested for leaks. When installed, the appliance complies with the applicable safety regulations and with the corresponding directives.

For the market:	EU	The appliance complies with directive 2014/53/EU.
For the market:	GB	The appliance complies with Radio Equipment Regulations 2017 SI 2017 No. 1206.

The full text of the EU Declaration of Conformity is available on the following website: www.Liebherr.com

1.6 SVHC substances according to REACH regulation

You can check whether your appliance contains SVHC substances according to REACH regulation at the following link: home.liebherr.com/de/deu/de/liebherr-erleben/nachhaltigkeit/umwelt/scip/scip.html

1.7 EPREL database

Details about energy labelling and ecodesign requirements will be available on the European product database (EPREL) from 1st March 2021. You can access the product database at the following link: https://eprel.ec.europa.eu/ You will be asked to enter the model ID. You can find the model ID on the nameplate.

2 General safety instructions

Please keep these operating instructions in a safe place so you can refer back to them at any time.

If you pass the appliance on, please hand these operating instructions to the next user.

Read these operating instructions carefully before use to ensure safe and correct use of the appliance. Follow the instructions, safety instructions and warning messages included at all times. They are important for ensuring you can operate and install the appliance safely and without any problems.

Danger for the user:

- This device can be used by children and people with impaired physical, sensory or mental abilities or with a lack of experience and knowledge provided that they are supervised or have received instruction in the safe use of this device, and about

* Depending on model and options

the resulting hazards. Children must not play with this appliance. Cleaning and user maintenance work must not be carried out by children without adult supervision. Children aged between 3 and 8 are allowed to load and unload the appliance. Children below the age of 3 must be kept away from the appliance unless they are under continuous adult supervision.

- The socket must be easily accessible so that the appliance can be disconnected quickly from the electricity in an emergency. It must not be located in the area behind the appliance.
- When disconnecting the appliance from the supply, always take hold of the plug. Do not pull the cable.
- In the event of a fault pull out the mains plug or deactivate the fuse.
- Do not damage the mains power cable. Do not operate the appliance with a defective mains power cable.
- Only customer service or other specially trained staff may repair or perform other operations on the appliance.
- Only install, connect and dispose of the appliance according to the instructions.
- Only use the appliance when is installed.
- The manufacturer is not liable for damage caused by a faulty fixed water connection.

Fire hazard:

- The coolant used (information on the model plate) is ecofriendly but also flammable. Any leaking coolant may ignite.
  - Do not damage the refrigerant circuit pipes.
  - Do not handle ignition sources inside the appliance.
  - Do not use electrical appliances inside the appliance (e.g. steam cleaners, heaters, ice cream makers, etc.).
  - If the refrigerant leaks: remove any naked flames or ignition sources from the vicinity of the leakage point. Properly air the room. Inform customer services.
- Do not store explosives or sprays using combustible propellants such as butane, propane, pentane, etc. in the appliance. To identify these spray cans, look for the list of contents printed on the can, or a flame symbol. Gases possibly escaping may ignite due to electrical components.
- Keep burning candles, lamps and other items with naked flames away from the appliance so that they do not set the appliance on fire.
- Please be sure to store alcoholic drinks or other packaging containing alcohol in tightly closed containers. Any alcohol that leaks out may be ignited by electrical components.

Danger of tipping and falling:

- Do not misuse the plinth, drawers, doors etc. as a step or for support. This applies particularly to children.

Danger of food poisoning:

- Do not consume food which has been stored too long.

Danger of frostbite, numbness and pain:

- Avoid prolonged skin contact with cold surfaces or refrigerated/frozen goods or take protective measures, e.g wear gloves.

Danger of injury and damage:

- Hot steam can lead to injury. Do not use electrical heating or steam cleaning equipment, open flames or defrosting sprays to defrost.
- Do not use sharp implements to remove the ice.

Risk of crushing:

- Do not hold the hinge when opening and closing the door. Fingers may get caught.

Symbols on the appliance:



This symbol may be located on the compressor. It relates to the oil in the compressor and makes reference to the risk that: Swallowing or inhaling can be fatal. This advice is only relevant to recycling. There is no danger in normal operation.



This symbol is located on the compressor and indicates the danger of flammable materials. Do not remove the sticker.



This or a similar sticker may be located on the rear of the appliance. This sticker indicates that there are vacuum insulation panels (VIP) or perlite panels in the door and/or housing. This advice is only relevant to recycling. Do not remove the sticker.

Please note the warning messages and other specific advice in the other chapters:

	DANGER	indicates an immediately hazardous situation which will lead to death or serious injuries if it is not avoided.
	WARNING	indicates a hazardous situation which may lead to death or serious injuries if it is not avoided.

⚠	CAUTION	indicates a hazardous situation which may lead to minor or moderate injuries if it is not avoided.
	NOTICE	indicates a hazardous situation which may lead to damage to property if it is not avoided.
	Note	indicates useful instructions and tips.

3 Functionality of the Touch & Swipe display

You operate your appliance using the Touch & Swipe display. You select appliance functions in the Touch & Swipe display (hereafter referred to as display) by tapping them. If you do not perform any action on the display for 10 seconds, the display either jumps back to the higher-level menu or directly to the status display.

3.1 Navigation and symbol explanation

In the illustrations, different symbols are used to navigate the display. The following table describes these symbols.

Symbol	Description
	**Briefly touch the display:** Activates/deactivates function. Confirms selection. Opens submenu.
	**Touch the display for a specified time (e.g. 3 seconds):** Activates/deactivates function or value.
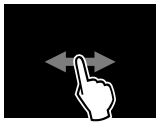	**Swipe left or right:** Navigate in the menu.
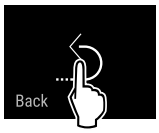	**Briefly touch the Back symbol:** Jumps back one menu level.
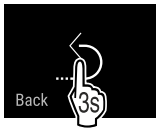	**Press and hold the Back symbol for 3 seconds:** Jumps back to the status display.
	**Arrow with clock:** It takes more than 10 seconds for the following message to appear in the display.
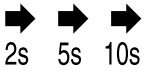	**Arrow with a time indication:** It takes the specified amount of time until the following message appears in the display.

Symbol	Description
	**“Open Settings menu” symbol:** Navigates to the Settings menu and opens the settings menu. If necessary: Navigate to the desired function in the Settings menu. (see 3.2.1 Opening the Settings menu)
	**“Open Advanced menu” symbol:** Navigates to the Advanced menu and opens the advanced menu. If necessary: Navigate to the desired function in the Advanced menu. (see 3.2.2 Opening the expanded menu)
No action for 10 seconds	If you do not perform any action on the display for 10 seconds, the display either jumps back to the higher-level menu or directly to the status display.
Open door and close it again.	If you open the door and immediately close it again, the display jumps directly back to the status display.

Note: Illustrations of the display are shown in the English version.

3.2 Menus

The appliance functions are distributed over various menus:

Menu	Description
Main menu	When you switch the appliance on, you are automatically in the main menu. From here you can navigate to the most important appliance functions, to the Settings menu and to the Advanced menu.
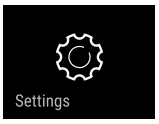 Settings menu	The Settings menu contains additional appliance functions for setting up your appliance.
Advanced menu	The advanced menu contains special appliance functions for setting up your appliance. Access to the Advanced menu is protected by the numerical code **1 5 1**.

3.2.1 Opening the Settings menu

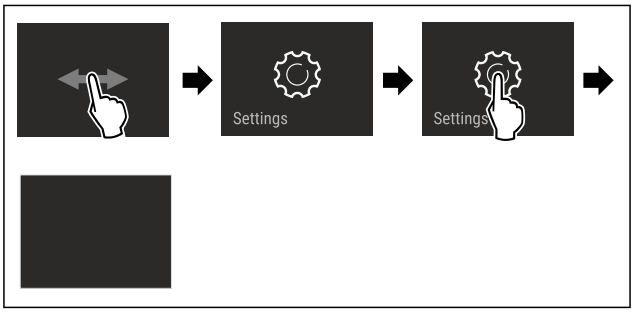

Fig. 2 Example illustration

▶ Carry out action steps according to the illustration.
▷ Settings menu is open.
▶ If necessary: Navigate to the desired function.

3.2.2 Opening the expanded menu



Fig. 3

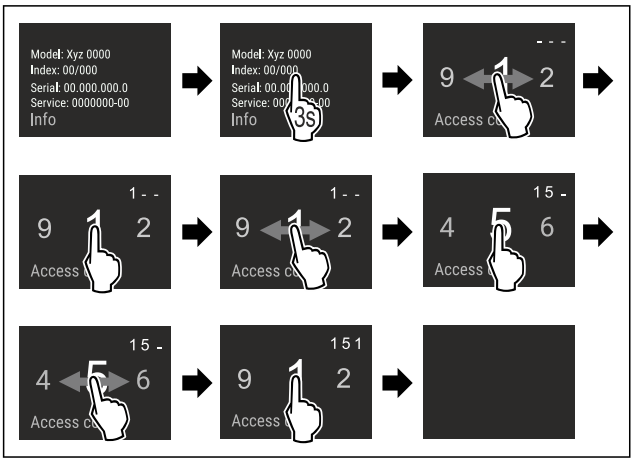

*Fig. 4 Example illustration, access with numerical code **151***

▶ Carry out action steps according to the illustration.
▷ The expanded menu is open.
▶ If necessary: Navigate to the desired function.

3.3 Sleep mode

If you do not touch the display for 1 minute, the display switches to sleep mode. In sleep mode, the display brightness is dimmed.

3.3.1 Ending sleep mode

▶ Touch the display briefly with your finger.
▷ Sleep mode is ended.

4 Putting into operation

4.1 Switching on appliance (first use)

Make sure that the following requirements are fulfilled:

❑ The appliance is properly installed and connected according to the installation instructions.
❑ All adhesive strips, adhesive and protective films and transport locks are removed from inside and on the appliance.
❑ All marketing leaflets are removed from the drawers.
❑ You are familiar with the functionality of the Touch & Swipe display. (see 3 Functionality of the Touch & Swipe display)

Switch on the appliance using the Touch & Swipe display:

▶ If the display is in sleep mode: Briefly touch the display.
▶ Carry out action steps according to the illustration.

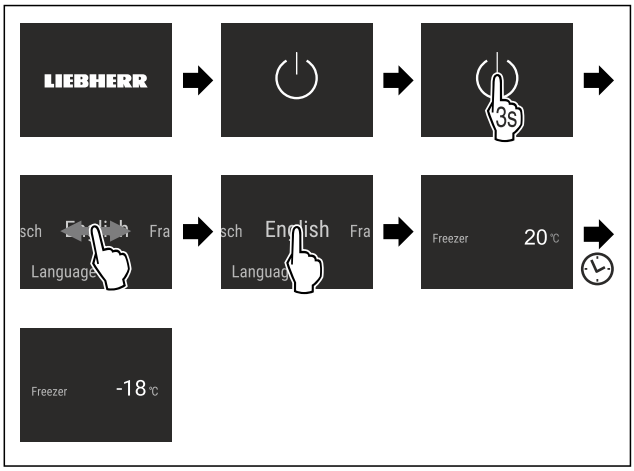

Fig. 5 Example illustration

▷ The status display appears.
▷ The appliance cools to the temperature set at the factory.
▷ The appliance starts in demo mode (status display with DEMO appears): If the appliance starts in demo mode, you can deactivate demo mode within the next 5 minutes. (see Demo mode)

More information:

- Start the IceMaker for the first time. (see 4.2 Starting the IceMaker for the first time)
- Start the SmartDevice for the first time. (see 1.3 SmartDevice) and (see WiFi)

Note
The manufacturer recommends:
▶ **Store frozen foods** at -18 °C or colder.
▶ Observe the notes on storing food. (see 5.1 Information regarding storage)

Note
Accessories can be purchased from the Liebherr-Hausgeräte store at home.liebherr.com/shop/de/deu/zubehor.html.

4.2 Starting the IceMaker for the first time

If your appliance is equipped with IceMaker, you must clean the IceMaker **before using it for the first time**.

Make sure that the following requirements are fulfilled:

❑ The water supply has been connected. See Installation Guide or mounting instructions.
❑ The appliance is properly installed and connected.

▶ Clean the IceMaker. (see 9.3.4 Cleaning the IceMaker)

5 Storage

5.1 Information regarding storage

WARNING
Risk of fire
▶ Do not use any electrical appliances in the food area of the appliance unless recommended by the manufacturer.

Note
The energy consumption increases and the cooling power goes down if ventilation is not sufficient.
▶ Always keep air slots clear.

Observe the following specifications for storage:
- Keep the air vents on the inside of the rear wall free.
- Package food properly.
- Package raw meat or fish in clean, closed containers. This will prevent meat or fish from touching or dripping onto other food.
- Leave space between goods to ensure good air circulation.
- Store food according to the instructions on the packaging.
- Always observe the best-before date indicated on the packaging.

Note
Failure to follow these guidelines can lead to foodstuffs spoiling.

5.2 Freezer compartment

Here, a dry, frosty storage climate is created at -18 °C. The frosty storage climate is suitable for storing frozen food for several months, for making ice cubes or freezing fresh food.

5.2.1 Freezing food

Freezing quantity

The maximum amount of fresh food that you can freeze within 24 hours is specified on the type plate (see 10.5 Model plate) under “Freezing capacity ... kg/24h”.

To ensure that food quickly freezes through, adhere to the following quantities per package:
- Fruit and vegetables up to 1 kg
- Meat up to 2.5 kg

Freezing food using SuperFrost

Depending on the quantity to be frozen, you can activate SuperFrost before freezing in order to achieve lower freezing temperatures. (see SuperFrost)
▶ Activate SuperFrost if the amount of food you have to freeze is more than approx. 2 kg.

The time at which you activate SuperFrost depends on the amount of food you have to freeze:

Freezing quantity	Time at which you should activate SuperFrost
Small amount of food to freeze	Activate SuperFrost about 6 hours before freezing. You can place the food in the freezer as soon as the appliance automatically deactivates SuperFrost.
Maximum amount of food to freeze	Activate SuperFrost about 24 hours before freezing. You can place the food in the freezer as soon as the appliance automatically deactivates SuperFrost.

Arranging your food properly

CAUTION
Risk of injury from broken glass!
Bottles and cans with beverages can burst during freezing. This applies in particular to carbonated beverages.
▶ Only freeze bottles and cans with beverages if you have activated the BottleTimer function in the SmartDevice app.

Appliance height < 1220 mm	
Freezing quantity	Arranging your food properly
Small amount of food to freeze	Distribute packaged groceries throughout all drawers. If possible, place groceries at the back of the drawer near the rear wall.
Maximum amount of food to freeze	Distribute packaged groceries throughout all drawers. If possible, place groceries at the back of the drawer near the rear wall.

Appliance height ≥ 1220 mm	
Freezing quantity	Arranging your food properly
Small amount of food to freeze	Distribute packaged groceries throughout all drawers, but do not place any groceries in the top drawer.
Maximum amount of food to freeze	Distribute packaged groceries throughout all drawers. If possible, place groceries at the back of the drawer near the rear wall.

5.2.2 Defrosting food

WARNING
Risk of food poisoning!
▶ Do not re-freeze thawed food.
▶ Use defrosted foodstuff as soon as possible.

You can defrost food in several ways:
- In the fridge compartment
- In the microwave
- In the oven/fan-assisted oven
- At room temperature

▶ Take out only as much food as necessary.

5.2.3 Freezer tray

You can freeze berries, herbs, vegetables and other small frozen food in the freezer tray without it all freezing together. The frozen food is less likely to get squashed and subsequent portioning is easier.

In addition, you can store the cold storage accumulators in the freezer tray to save space.
▶ Distribute food on the freezer tray without packaging and well spaced out.

5.3 Storage times

Refer to the specified storage times as a guide.

In the case of foods with a minimum shelf life, the date indicated on the packaging still applies.

Recommended storage period for various types of food		
Ice cream	at -18 °C	2 to 6 months
Sausages, ham	at -18 °C	2 to 3 months
Bread, baked goods	at -18 °C	2 to 6 months
Game, pork	at -18 °C	6 to 9 months
Fatty fish	at -18 °C	2 to 6 months

Recommended storage period for various types of food		
Lean fish	at -18 °C	6 to 8 months
Cheese	at -18 °C	2 to 6 months
Poultry, beef	at -18 °C	6 to 12 months
Vegetables, fruit	at -18 °C	6 to 12 months

6 Saving energy

- Pay attention to good ventilation. Do not cover ventilation holes or grids.
- Always keep the fan air slits clear.
- Do not install the appliance in direct sunlight, next to an oven, radiator or similar.
- Energy consumption depends on the installation conditions, e.g. the ambient temperature (see 1.4 Appliance range of use) . A warmer ambient temperature can increase the energy consumption.
- Open the appliance for as short a time as possible.
- The lower the temperature is set the higher the energy consumption.
- Keep all food properly packed and covered. This prevents frost from forming.
- Inserting warm food: allow to cool down to room temperature first.

7 Controls

7.1 Controls and displays

7.1.1 Status display

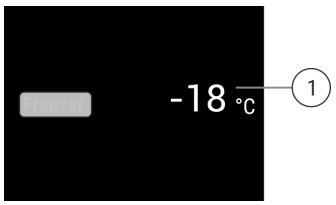

Fig. 6
(1) Temperature display

The Status display shows the set temperatures and is the home display. From there, you can navigate to the options and settings.

7.1.2 Display symbols

Display symbols provide information on the current appliance status:

Symbol	Appliance status
	Standby The appliance or temperature zone is switched off.
	Flashing number Appliance is working. Temperature flashes until the set temperature is reached.

Symbol	Appliance status
	Flashing symbol Appliance is working. Setting is made.

7.2 Appliance functions

7.2.1 Notes on the appliance functions

The appliance functions are set at the factory so that your appliance is fully functional.

Before you alter, activate or deactivate the device functions, make sure that the following requirements are met:

❑ You have read and understood the descriptions of how the display works.
❑ You have familiarised yourself with the operating and display elements of your appliance.

Turn off appliance

This setting turns off the whole appliance.

Switching off the entire appliance



Fig. 7

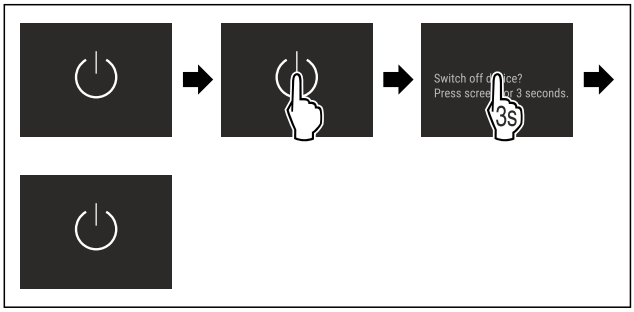

Fig. 8

▶ Turning off the IceMaker .
▷ Off: Display goes black.

WiFi

Use this function to connect your appliance to WiFi. You can then operate it via the SmartDevice app on a mobile device. You can also use this function to disconnect or reset the WiFi connection.

More information on the SmartDevice: (see 1.3 SmartDevice)

Note
The SmartDevice function is not available in the following countries: Russia, Belarus, Kazakhstan.

Establishing the WiFi connection for the first time

Make sure that the following requirements are fulfilled:

❑ You have installed the SmartDevice app (see apps.home.liebherr.com).
❑ Registration in the SmartDevice app is completed.



Fig. 9

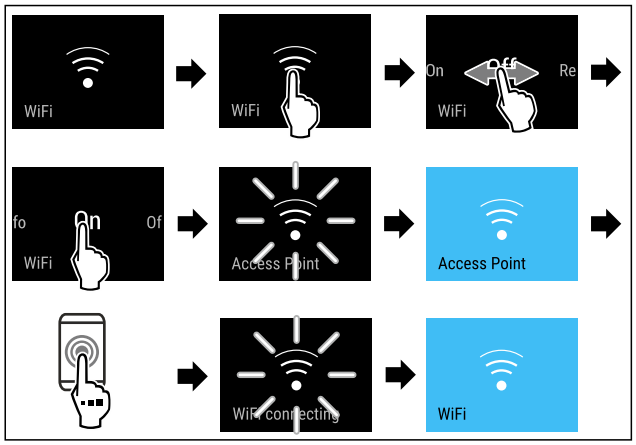

Fig. 10

▶ Carry out action steps according to the illustration.
▷ Connection is established.

Disconnecting from the WiFi



Fig. 11

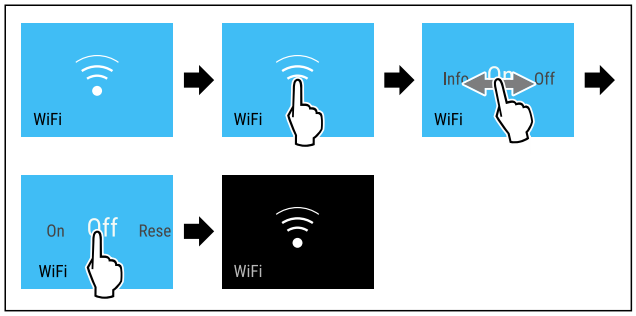

Fig. 12

▶ Carry out action steps according to the illustration.
▷ There is no connection.

Resetting the WiFi connection



Fig. 13

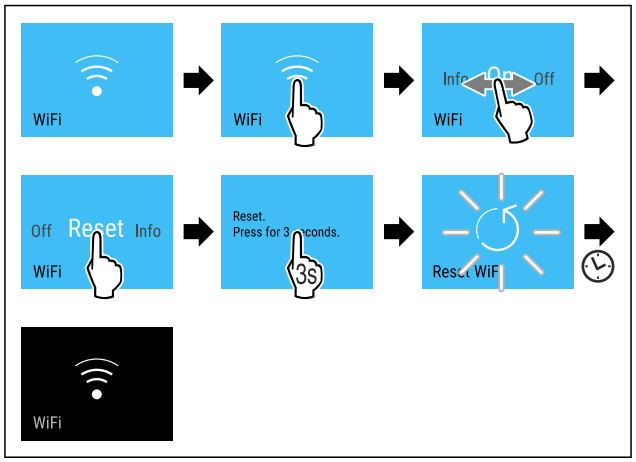

Fig. 14

▶ Carry out action steps according to the illustration.
▷ WiFi connection and other WiFi settings are reset to factory settings.

Showing information about the WiFi connection



Fig. 15

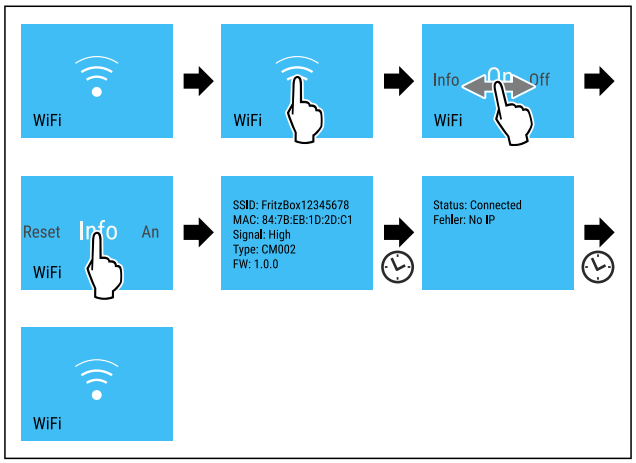

Fig. 16

▶ Carry out action steps according to the illustration.

-18°C Temperature

Use this function to set the temperature.

The temperature depends on the following factors:

- How often the door is opened
- How long the door is open for
- The room temperature of the installation site
- The type, temperature and amount of food

Freezer compartment	Recommended setting
-18°C	-18 °C

Setting temperature

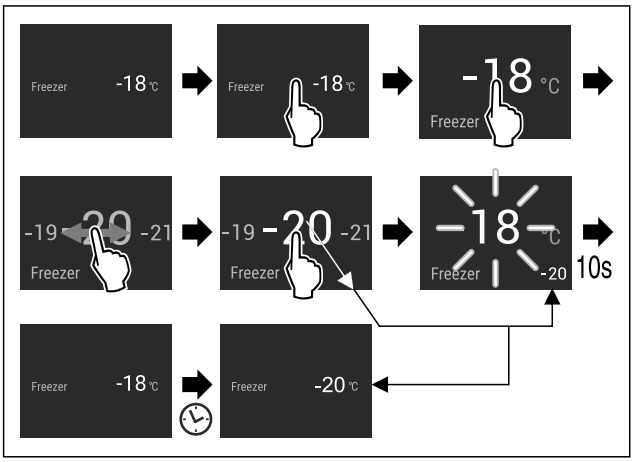

Fig. 17

▶ Carry out action steps according to the illustration.
▷ Temperature is set.

Temperature unit

Use this function to set the temperature unit. You can set degrees Celsius or degrees Fahrenheit as the temperature unit.

Setting the temperature unit



Fig. 18

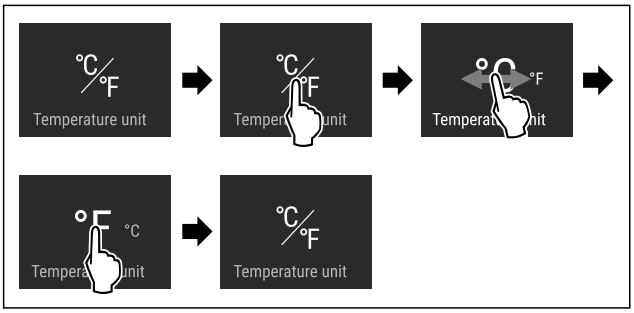

Fig. 19 Example illustration: Switch from degrees Celsius to degrees Fahrenheit.

▶ Carry out action steps according to the illustration.
▷ The temperature unit is set.

SuperFrost

This function selects the lowest freezing temperature. This gives you colder storage temperatures.

Use:

- For storing more than 2 kg fresh food every day.
- Freezing fresh food quickly to the core.
- Increasing the cold reserves in the stored goods before defrosting the appliance.

Activating/deactivating the function

With a small amount to freeze:
▶ Activate 6 hours before use.
With a maximum amount to freeze:
▶ Activate 24 hours before use.
▶ Activating/deactivating.
-or-
▶ Activate/deactivate using the SmartDevice app.

The function automatically turns off. The appliance goes back to normal mode. The temperature adjusts itself to the set level.

Start defrosting cycle

Use this function to start the automatic defrosting cycle manually if it does not start automatically in the event of a fault.

Starting defrosting cycle



Fig. 20

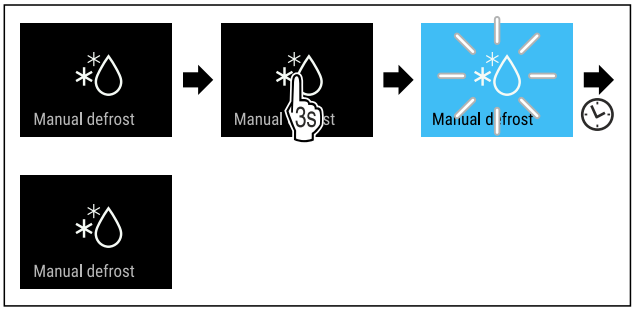

Fig. 21

▶ Carry out action steps according to the illustration.
▷ Defrosting cycle has started: Icon flashes until defrosting cycle is automatically completed.
▷ When defrosting cycle is finished: The device continues to run in normal mode.

Cancelling defrosting cycle

The defrosting cycle will be stopped automatically. However, you can also cancel the defrosting cycle at any time during the defrosting process:

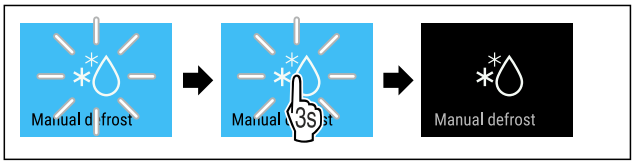

Fig. 22

▶ Carry out action steps according to the illustration.
▷ Defrosting cycle is cancelled.
▷ The device continues to run in normal mode.

PartyMode

You can use this function to activate or deactivate Party-Mode. PartyMode activates various functions that are useful for a party.

PartyMode activates the following functions:

- SuperFrost (see SuperFrost)
- IceMaker with MaxIce (see IceMaker / MaxIce)

You can adjust all listed functions individually and flexibly. When you deactivate PartyMode, all changes are discarded.

If the function is active, the device operates at higher power. As a result, the device's operating noise may be temporarily louder and energy consumption will increase.

Activating PartyMode

Make sure that the following requirements are fulfilled:

❑ The IceMaker has been started. (see 4.2 Starting the IceMaker for the first time)

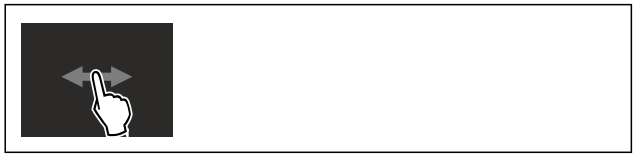

Fig. 23

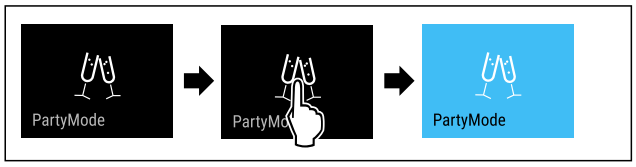

Fig. 24

▶ Carry out action steps according to the illustration.
▷ PartyMode and the associated functions are activated.
▷ The temperature display turns blue.
▷ The current temperature flashes until the target temperature is reached.

Deactivating PartyMode

The PartyMode is automatically deactivated after 24 seconds. However, you can also deactivate PartyMode manually at any time:

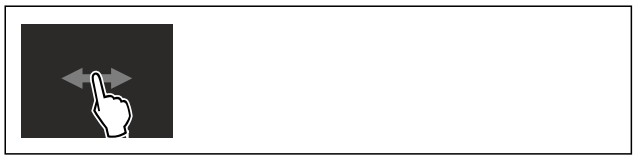

Fig. 25

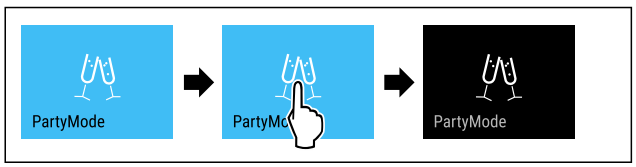

Fig. 26

▶ Carry out action steps according to the illustration.
▷ PartyMode is deactivated.
▷ The appliance cools to the temperature set previously: The current temperature flashes until the target temperature is reached.

SabbathMode

You can use this function to activate or deactivate SabbathMode. If you activate this function, some electronic functions are switched off. As a result, your device meets the religious requirements for Jewish holidays such as Sabbath and complies with STAR-K Kosher certification.

Device status when SabbathMode is active
The status display shows SabbathMode permanently.
All functions on the display are locked except for the **Deactivate SabbathMode function**.
Active functions remain active.
The display remains bright when you close the door.
The interior lighting is deactivated.

Device status when SabbathMode is active
Reminders are not implemented. The set time interval stops.
Reminders and warnings are not displayed.
There is no door alarm.
There is no temperature alarm.
The IceMaker is switched off.
The defrosting cycle operates only for the specified time, without considering the device consumption.
After a power failure, the device returns to SabbathMode.

Device status

Note

This appliance has certification from the “Institute for Science and Halacha”. (www.machonhalacha.co.il)

You can find a list of STAR-K-certified appliances at www.star-k.org/appliances.

Activating SabbathMode

WARNING

Danger of food poisoning from spoiled food!
If you have SabbathMode activated and a power failure occurs, no message appears in the status display about the power failure. Once the power is restored, the appliance continues to operate in SabbathMode. The power failure may mean that food spoils and the consumption of this food could lead to food poisoning.
After a power failure:

▶ Do not consume food that was frozen and has thawed out.



Fig. 27

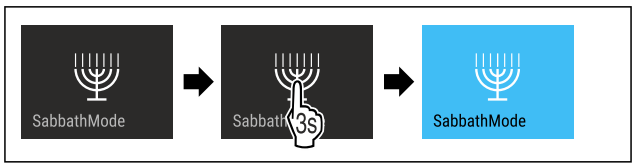

Fig. 28

▶ Carry out action steps according to the illustration.
▷ SabbathMode is activated.
▷ The status display shows SabbathMode permanently.

Deactivating SabbathMode

The SabbathMode is automatically deactivated after 80 hours. However, you can also deactivate SabbathMode manually at any time:

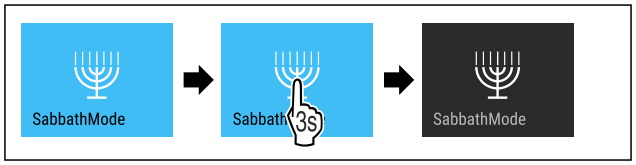

Fig. 29

▶ Carry out action steps according to the illustration.
▷ SabbathMode is deactivated.

EnergySaver

You can use this function to activate or deactivate Energy saving mode. If energy saving mode is activated, the energy consumption decreases and the temperature in the device increases. The food remains fresh, but the shelf life is shortened.

Temperature zone	Recommended setting (see Temperature)	Temperature with active EnergySaver
-18	-18 °C	-16 °C

Temperatures

Activating EnergySaver



Fig. 30

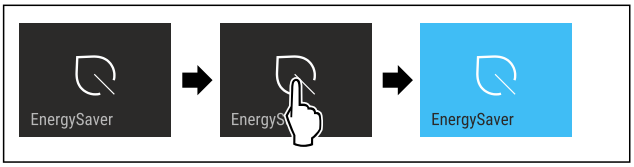

Fig. 31

▶ Carry out action steps according to the illustration.
▷ Energy saving mode is activated.

Deactivating EnergySaver



Fig. 32

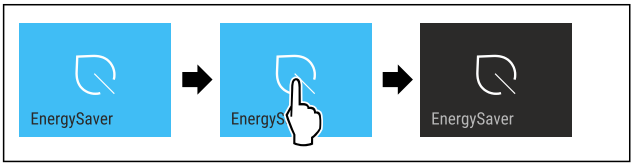

Fig. 33

▶ Carry out action steps according to the illustration.
▷ Energy saving mode is deactivated.

IceMaker / MaxIce

You can activate or deactivate ice cube production with the IceMaker function. Use the MaxIce function to increase the number of ice cubes in the IceMaker.

More information on the number of ice cubes:	(see 10.1 Technical specifications)
Further information on the IceMaker water supply:	(see IceMaker water supply)
More information on cleaning the lines of the IceMaker:	(see TubeClean)

If the function is active, the device operates at higher power. As a result, the device's operating noise may be temporarily louder and energy consumption will increase.

Activating IceMaker

Make sure that the following requirements are fulfilled:

❑ The water supply is established at the fixed water connection. See installation instructions.
❑ IceMaker is put into operation. (see 8.4 IceMaker)



Fig. 34

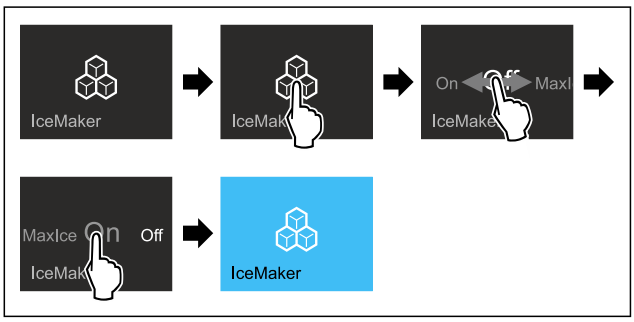

Fig. 35

▶ Carry out action steps according to the illustration.
-or-
▶ Activate with the SmartDevice app.

▷ IceMaker is activated. It can take up to 24 hours for the IceMaker to produce the first ice cubes.

Activating the IceMaker with MaxIce

If you have not activated the IceMaker function before, make sure that the following requirements are met:

❑ The water supply is established at the fixed water connection. See installation instructions.
❑ IceMaker is put into operation. (see 8.4 IceMaker)



Fig. 36

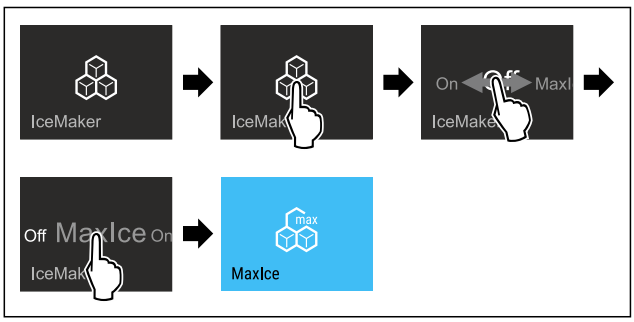

Fig. 37

▶ Carry out action steps according to the illustration.
-or-
▶ Activate with the SmartDevice app.

▷ The IceMaker is activated with MaxIce.

Changing between the IceMaker and MaxIce

If you have activated the IceMaker and would like to change to MaxIce:



Fig. 38

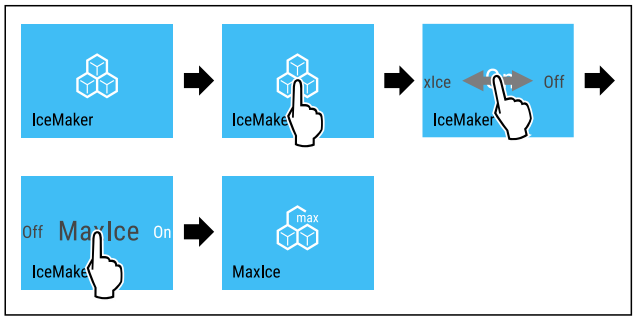

Fig. 39

▶ Carry out action steps according to the illustration.
▷ The IceMaker is activated with MaxIce.

If you have activated MaxIce and would like to change to the IceMaker:



Fig. 40

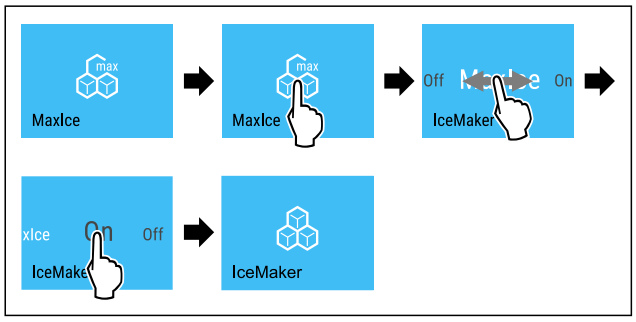

Fig. 41

▶ Carry out action steps according to the illustration.
▷ IceMaker is activated.
▷ MaxIce is deactivated.

Deactivating the IceMaker / MaxIce

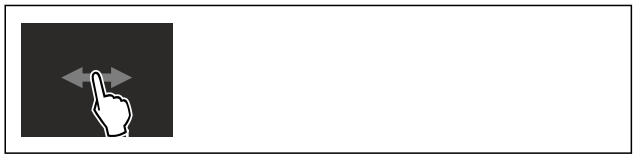

Fig. 42

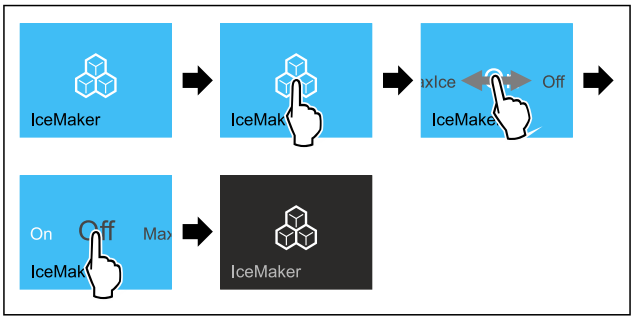

Fig. 43 Example illustration of the active IceMaker function

▶ Carry out action steps according to the illustration.

-or-

▶ Deactivate with the SmartDevice app.

▷ IceMaker and MaxIce are deactivated.
▷ If ice cubes are currently being made, the system completes the process.
▷ The IceMaker goes off automatically.

5 IceMaker water supply

Use this function to set the IceMaker water supply. The IceMaker water supply regulates the amount of water supplied. The IceMaker water supply can be changed if the water supply does not match the water pressure and the ice cube size dispensed.

The IceMaker water supply is pre-set to value 5 as delivered. A value from 1 (smallest inflow volume) to 8 (largest inflow volume) can be selected.

Setting the IceMaker water supply

Make sure that the following requirements are fulfilled:

❑ The IceMaker has been started. (see 4.2 Starting the IceMaker for the first time)
❑ IceMaker is activated. (see IceMaker / MaxIce)



Fig. 44

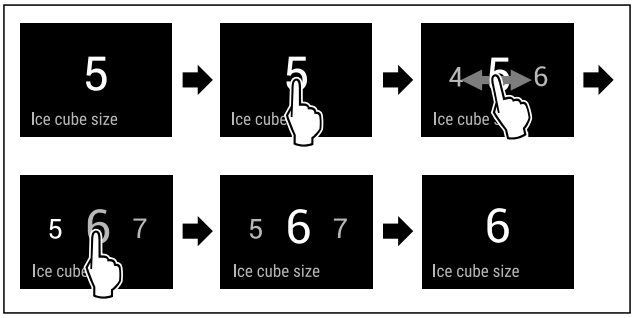

Fig. 45 Example illustration: Switch from value 5 to value 6.

▶ Carry out action steps according to the illustration.
▷ IceMaker water supply is set.

TubeClean

You can use this function to activate or deactivate TubeClean. If TubeClean is activated, it cleans the IceMaker lines.

Activating TubeClean

Make sure that the following requirements are fulfilled:

❑ IceMaker cleaning is prepared. (see 9.3.4 Cleaning the IceMaker)
❑ Empty container with a capacity of 1.5 l and with a maximum height of 10 cm is ready.

▶ Place the container in the drawer under the IceMaker.



Fig. 46

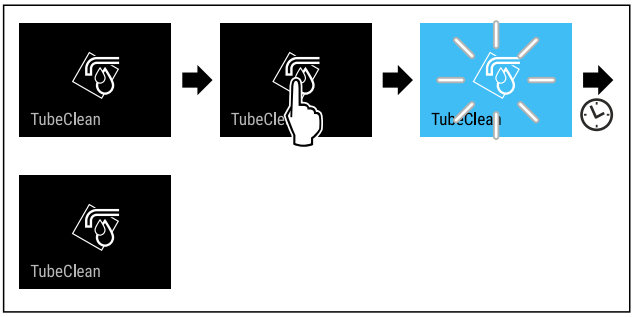

Fig. 47

▶ Carry out action steps according to the illustration.
▷ TubeClean is activated.
▷ The cleaning process has started: Icon flashes until the cleaning process is automatically completed after 60 minutes.
▷ When the cleaning process is complete: The device continues to run in normal mode.

Deactivating TubeClean

TubeClean is automatically ended after 60 minutes. However, TubeClean can also be deactivated at any time during the cleaning process:

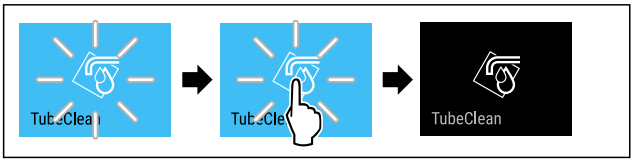

Fig. 48

▶ Carry out action steps according to the illustration.
▷ TubeClean is deactivated: Cleaning process is aborted.
▷ The device continues to run in normal mode.

Display brightness

Use this function to set the display brightness in stages.

You can select the following brightness levels:

- 40 %
- 60 %
- 80 %
- 100 % (pre-setting)

Setting the display brightness

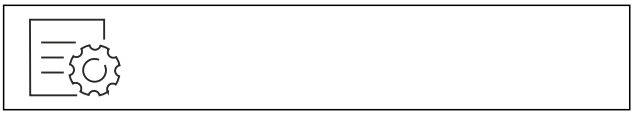

Fig. 49

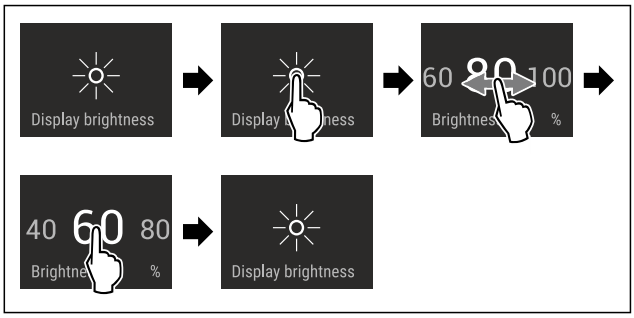

Fig. 50 Example illustration: Switch from 80 % to 60 %.

▶ Carry out action steps according to the illustration.
▷ The display brightness is set.

Door alarm

Use this function to activate or deactivate the door alarm. The door alarm sounds if the door is open for too long. The door alarm is activated on delivery. You can set how long the door may be open before the door alarm sounds.

The following values can be set:

- 1 minute
- 2 minutes
- 3 minutes
- Off

Setting the door alarm



Fig. 51

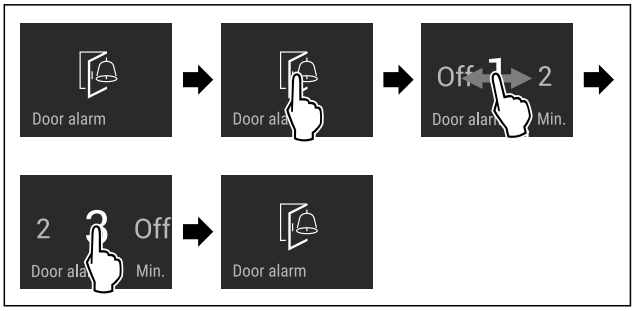

Fig. 52 Example illustration: Change door alarm from 1 minute to 3 minutes.

▶ Carry out action steps according to the illustration.
▷ The door alarm is set.

Deactivating the door alarm



Fig. 54

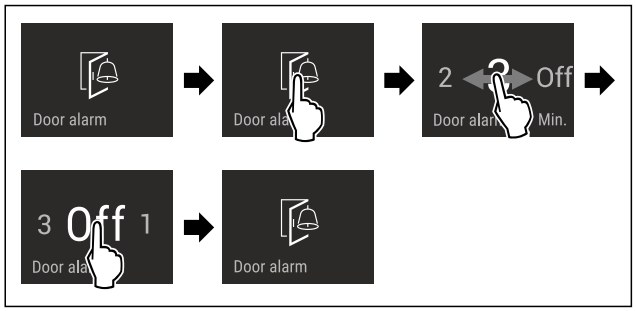

Fig. 55

▶ Carry out action steps according to the illustration.
▷ The door alarm is deactivated.

Input lock

You can use this function to activate or deactivate the input lock. The input lock prevents the appliance being operated accidentally, e.g. by children.

Application:

- Avoid unintentional modification of functions.
- Avoid unintentional switching off of the device.
- Avoid unintentional temperature setting.

Activating the input lock

If you activate the input lock, you can continue to navigate in the menus but you cannot select or change other functions.



Fig. 56

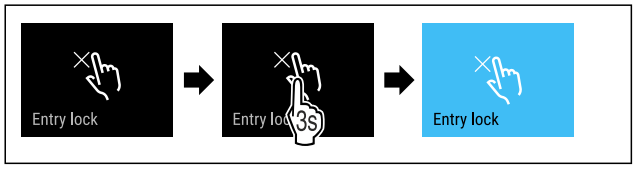

Fig. 57

▶ Carry out action steps according to the illustration.
▷ Input lock is activated.

Deactivating the input lock



Fig. 58

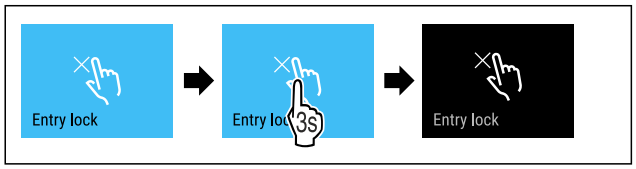

Fig. 59

▶ Carry out action steps according to the illustration.
▷ Input lock is deactivated.

Language

Use this function to set the display language.

You can select the following languages:

- Deutsch
- English
- Français
- Español
- Italiano
- Nederlands
- Čeština
- Polski
- Português
- Русский
- 温度单位

Setting the language



Fig. 60

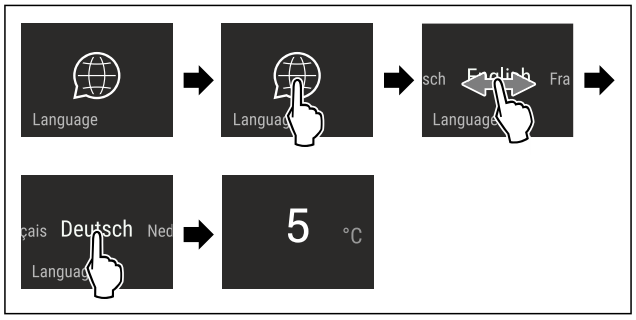

Fig. 61 Example illustration depending on the language and temperature

▶ Carry out action steps according to the illustration.
▷ The language is set.
▷ The display returns to the status display.

Device information

Use this function to indicate the model name, index, serial number and service number of your device. You will need the device information when you contact customer service. (see 10.4 Customer Service)

This function also opens the Advanced menu. (see 3 Functionality of the Touch & Swipe display)

Indicating the device information



Fig. 62



Fig. 63

▶ Carry out action steps according to the illustration.
▷ Display indicates device information.

Software

Use this function to indicate the software version of your device.

Indicating the software version



Fig. 64

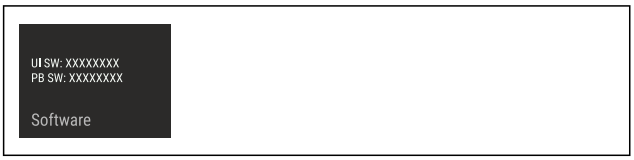

Fig. 65

▶ Carry out action steps according to the illustration.
▷ Display indicates software version.

Reminder

Reminders are given out acoustically by a beep and visually by a symbol in the display. The signal gets louder until the alert stops.

Activating the setting

▶ Activating/deactivating .

Demo mode

Demo mode is a special feature for dealers who want to demonstrate appliance features. If you activate demo mode, all refrigeration functions are deactivated.

If you switch on your appliance and “Demo” appears in the status display, then demo mode is already activated.

If you activate and then deactivate demo mode, the appliance will be reset to factory defaults. (see Resetting to factory settings)

Activating demo mode



Fig. 66

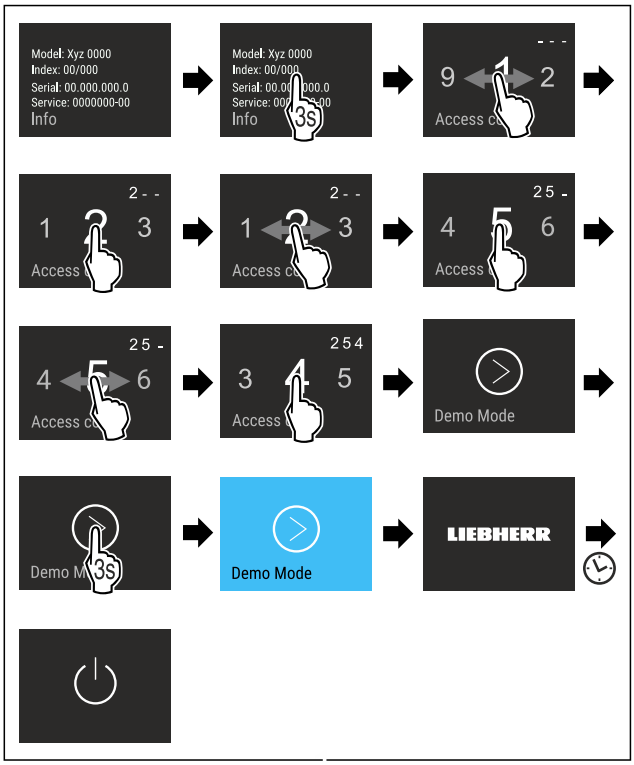

Fig. 67

▶ Carry out action steps according to the illustration.
▷ Demo mode is activated.
▷ Appliance is switched off.
▶ Switch on the appliance. (see 4.1 Switching on appliance (first use))
▷ “DEMO” appears in the status display.

Deactivating demo mode



Fig. 68

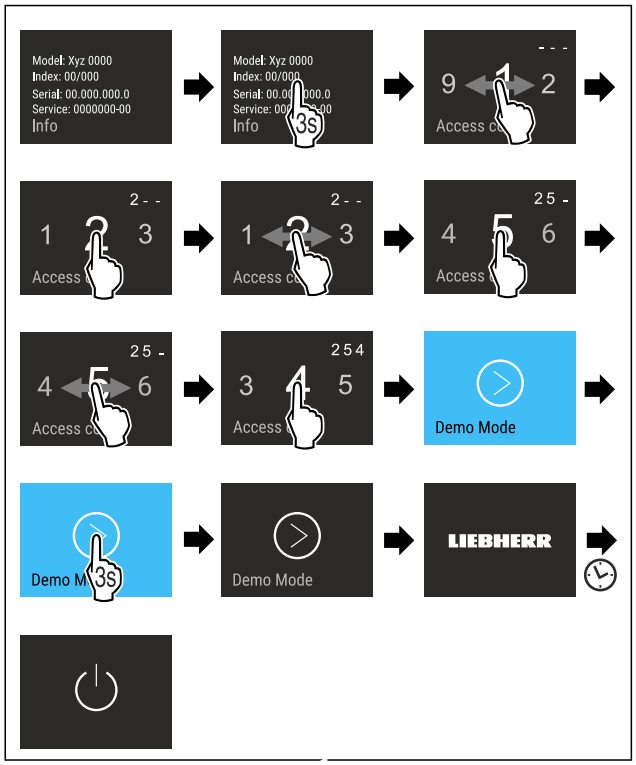

Fig. 69

▶ Carry out action steps according to the illustration.
▷ Demo mode is deactivated.
▷ Appliance is switched off.
▶ Switch on the appliance. (see 4.1 Switching on appliance (first use))
▷ Appliance is reset to factory settings.

Resetting to factory settings

Use this function to reset all settings to factory defaults. All settings you have made so far are reset to their original settings.

Performing a reset



Fig. 70

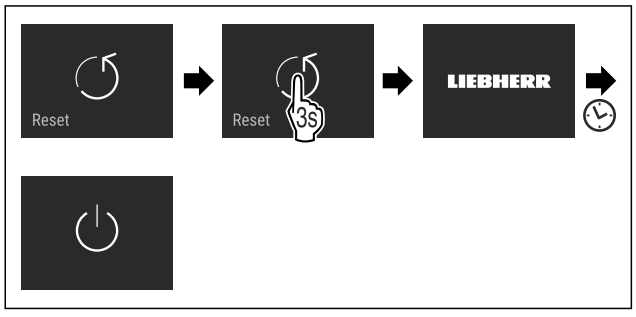

Fig. 71

▶ Carry out action steps according to the illustration.
▷ Device is reset.
▷ Device is switched off.
▶ Restart the device. (see 4.1 Switching on appliance (first use))

7.3 Fault messages

Fault messages appear in the display. There are two categories of fault message:

Category	Meaning
Message	Reminder of general procedures. You can carry out these procedures to eliminate the message.
Warning	Appears when there are malfunctions. A signal sounds in addition to the display. The signal becomes louder until you acknowledge by tapping the display. You can eliminate simple defects yourself. For more serious defects, you must contact customer service.

7.3.1 Warnings

Close the door

This message appears if the door is open for too long.

You can set how long it takes for this message to appear .

▶ Stop alarm: Confirm the message.

-or-

▶ Close the door.

Power cut

This message appears if the freezer temperature increased due to a power cut. After the power is restored, the appliance continues to work at the set temperature.

▶ Stop alarm: Confirm the message.
▷ Temperature alert appears (see Temperature alarm) .

Temperature alarm

This message appears if the temperature does not match the set temperature.

Variations in temperature could be because:

- Hot, fresh food was inserted.
- Too much warm room air flowed in when rearranging and removing food.
- The power was cut off for a while.
- The appliance is faulty.

When the fault is eliminated the appliance continues to work at the set temperature.

▶ Confirm the display.
▷ The highest temperature is shown.
▶ Confirm display again.
▷ The status display is displayed.
▷ The current temperature is shown.

Error

This message appears if there is a fault with the appliance. An appliance component indicates a fault.

▶ Open the door.
▶ Note down the fault code.
▶ Confirm the message.
▷ The signal tone stops.
▷ The status display appears.
▶ Close the door.
▶ Contact customer service. (see 10.4 Customer Service)

7.3.2 Message

Insert IceMaker drawer

This message appears if the IceMaker drawer is open.
▶ Push in the IceMaker drawer.
▷ The message disappears.
▷ The IceMaker produces ice cubes.

8 Features

8.1 Drawers

You can remove the drawers for cleaning.

You can remove the drawers to use VarioSpace.

The way to remove/insert the drawers varies depending on the pull-out system. Your appliance can contain various pull-out systems.

Note
The energy consumption increases and the cooling power goes down if ventilation is not sufficient.
▶ Leave the bottom drawer in the appliance!
▶ Always leave the fan air vents clear on the back wall!

8.1.1 Drawer on appliance base or glass shelf

The drawer runs directly on the appliance base or on a glass shelf. There are no rails.

When you remove the drawers, you can use the glass shelves below them as storage shelves.

Removing drawer

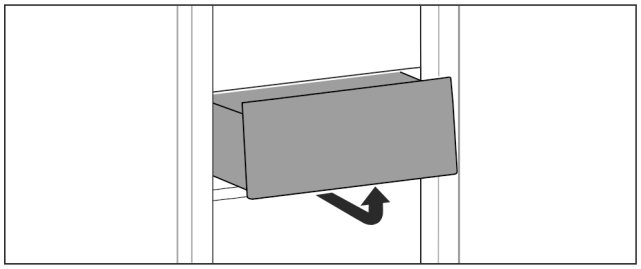

Fig. 72
▶ Remove drawer as shown in the illustration.

Inserting drawer

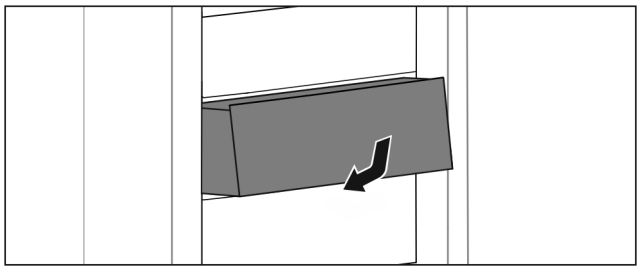

Fig. 73
▶ Insert drawer as shown in the illustration.

8.1.2 Drawer on telescopic rails

The drawer runs on extendible rails (telescopic rails). There are fully extendible telescopic rails and telescopic rails with partial pull-out. Drawers which are fully extendible can be pulled out fully from the appliance. Drawers with partial pull-out cannot be removed fully from the appliance. The system in your appliance depends on the type of appliance.

Drawer on glass shelf

The drawer guided on a glass shelf is a partial pull-out.

Removing drawer

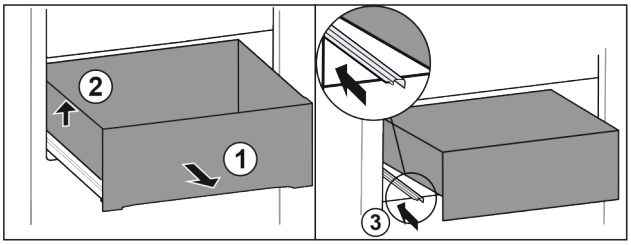

Fig. 74
▶ Pull out drawer as far as it will go. *Fig. 74 (1)*
▶ Lift drawer on the left. *Fig. 74 (2)*
▶ Insert left rail. *Fig. 74 (3)*

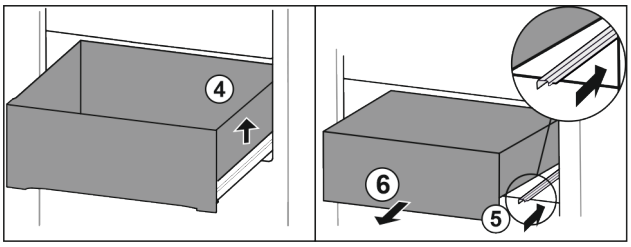

Fig. 75
▶ Lift drawer on the right. *Fig. 75 (4)*
▶ Insert right rail. *Fig. 75 (5)*
▶ Remove drawer to the front. *Fig. 75 (6)*

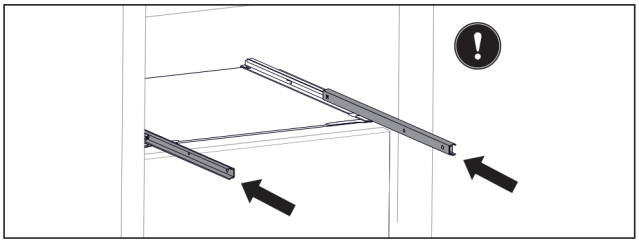

Fig. 76
If the rails are not yet fully inserted after removing the drawer:
▶ Push rails in completely.

Inserting drawer

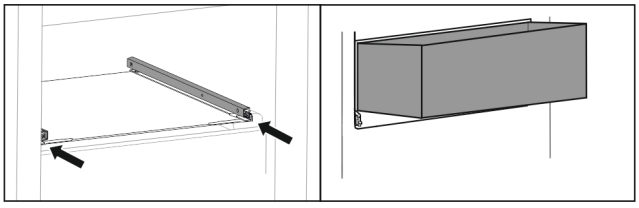

Fig. 77
▶ Slide rails in.
▶ Place drawer on rails at an angle.

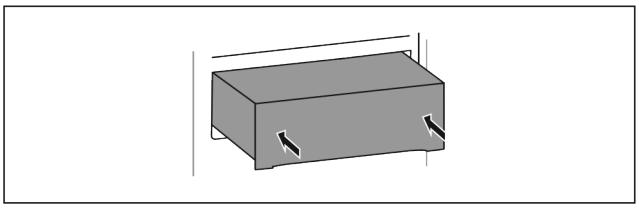

Fig. 78
▶ Lower drawer.
▶ Slide in drawer to the back.

8.1.3 Top tilting drawer

When you pull out the top drawer, it tilts forward. This gives you a better view into the drawer. The function depends on the height of the appliance.

When you remove the tilting drawers, you can use the glass shelf below them as a storage shelf.

Removing drawer

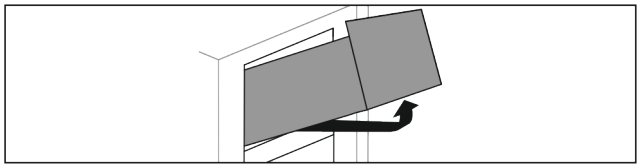

Fig. 79

- ▶ Pull out drawer as far as it will go.
- ▶ Lift drawer up at the front and at the same time push up at the back from below.
- ▶ Remove drawer to the front.

Inserting drawer

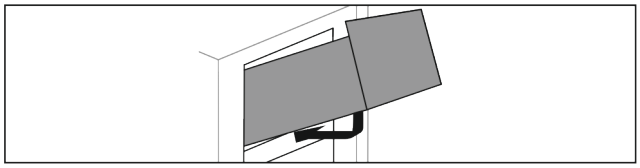

Fig. 80

- ▶ Position drawer as shown.
- ▷ The drawer rests on the glass panel.
- ▶ Lift drawer slightly from below at the back and slide over the lip.
- ▶ Slide in drawer to the back.

8.1.4 Drawer on moulded rib

The drawer runs directly on the moulded rib. There are no rails.

Removing drawer

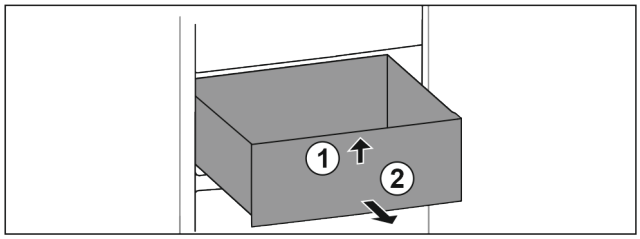

Fig. 81

- ▶ Pull out drawer as far as it will go.
- ▶ Lift up drawer at the front. *Fig. 81 (1)*
- ▶ Remove drawer to the front. *Fig. 81 (2)*

Inserting drawer

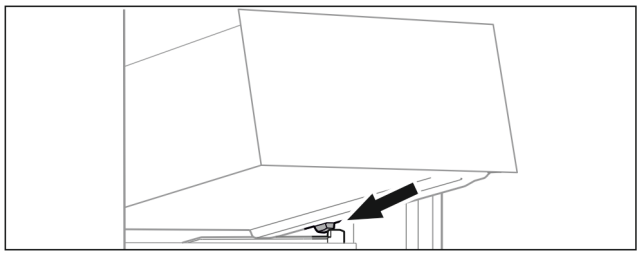

Fig. 82

- ▶ Place drawer at an angle behind the stoppers on the moulded rib. (see Fig. 82)
- ▶ Lower drawer.
- ▶ Slide in drawer to the back.

8.2 Pull-out board with IceTower

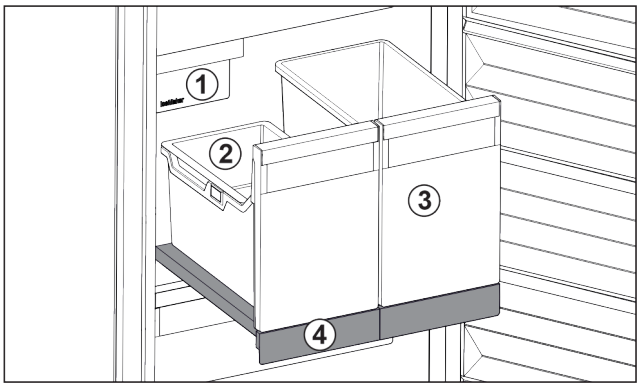

Fig. 83 Pull-out board with IceTower

(1) IceMaker

(2) Hang-on tray for ice cubes

(3) Container for pizza or alcoholic beverages, for example

(4) Pull-out board

There are two high (IceTower) containers on the pull-out board. Ice cubes from the IceMaker are collected and stored in the *Fig. 83 (2)* container. The container *Fig. 83 (3)* is suitable for storing tall foodstuffs or beverages such as pizzas or alcoholic drinks.

The pull-out board with IceTower is mounted on a glass shelf with pull-out rails. You can dismantle the pull-out board for cleaning.

8.2.1 Dismantling the pull-out board with IceTower

Removing the container

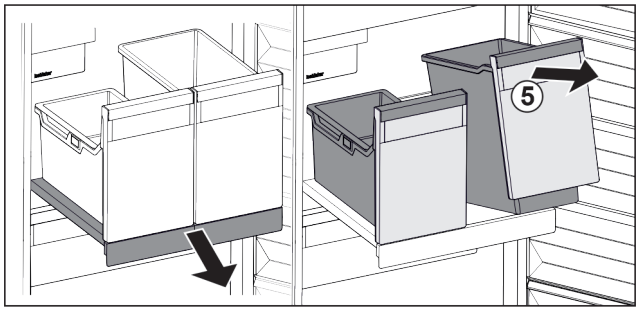

Fig. 84

- ▶ Pull out the pull-out board.
- ▶ Lift the container *Fig. 84 (5)* at the front.
- ▶ Remove the container.

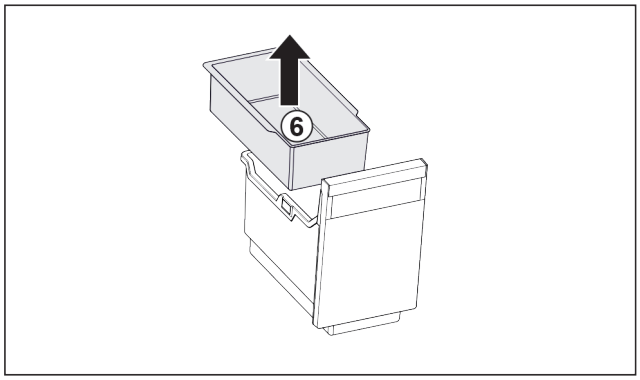

Fig. 85

- ▶ Remove the hang-on tray *Fig. 85 (6)*.
- ▶ If there are ice cubes in the hang-on tray: Empty the hang-on tray.
- ▷ The container and hang-on tray have been removed and you can clean them. (see 9.3.3 Clean the components)

Removing the pull-out board

Ensure that the following conditions are met:

❑ Containers have been removed. (see Removing the container)

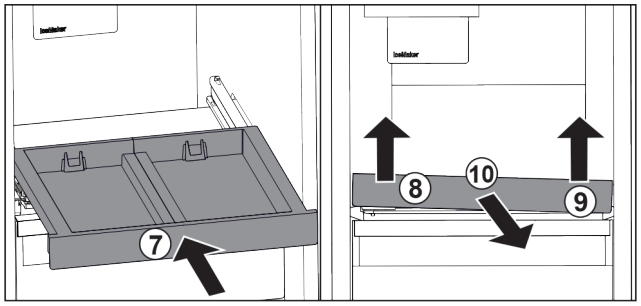

Fig. 86

▶ Slide in the pull-out board. *Fig. 86 (7)*
▶ Lift the pull-out board on the front left. *Fig. 86 (8)*
▶ Lift the pull-out board on the front right. *Fig. 86 (9)*
▷ Pull-out board is detached from the attachment at the front.
▶ Take out the pull-out board to the front. *Fig. 86 (10)*
▷ The pull-out board has been removed and you can clean it. (see 9.3.3 Clean the components)

Removing the glass shelf from under the pull-out board

(see 8.3 Glass shelves)

8.2.2 Inserting the pull-out board with IceTower

Inserting the glass shelf from under the pull-out board

(see 8.3 Glass shelves)

Inserting the pull-out board

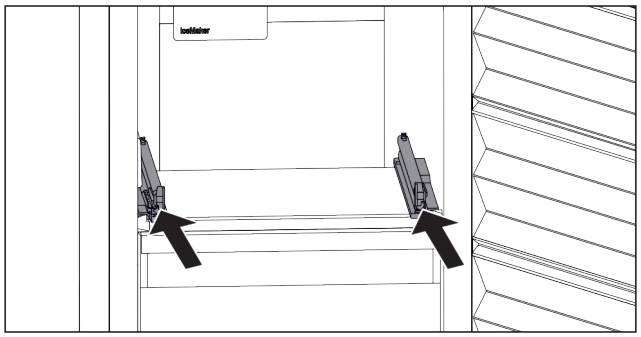

Fig. 87

▶ Slide the rails in.

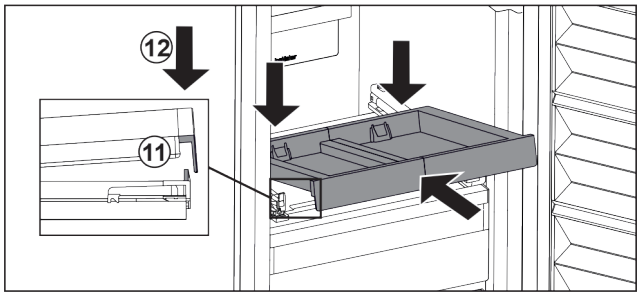

Fig. 88

▶ Place the pull-out board in at an angle behind the front lug.
▶ Slide in at an angle. Make sure that the stop is behind the lug on both sides. *Fig. 88 (11)*
▶ Lower the pull-out board at the front. *Fig. 88 (12)*

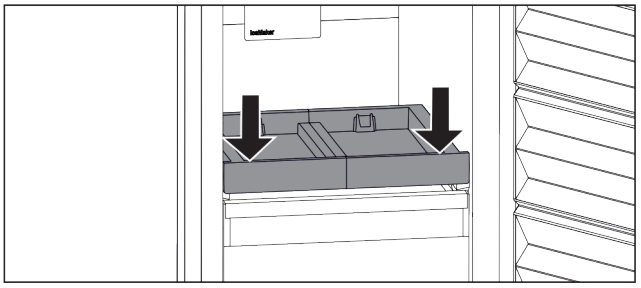

Fig. 89

▶ Push the pull-out board down at the front.
▷ Pull-out board clicks into place.

Inserting the container

Ensure that the following conditions are met:

❑ The pull-out board is inserted. (see Inserting the pull-out board)

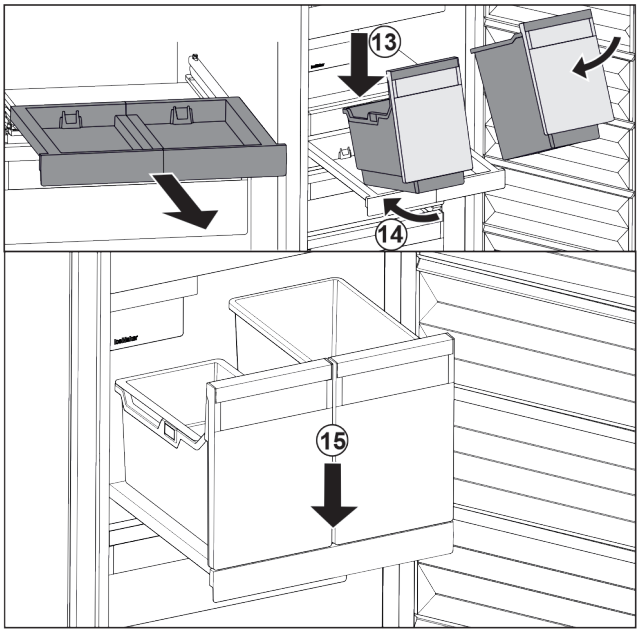

Fig. 90

▶ Pull out the pull-out board.
▶ Hold the pull-out board with one hand.

Note

The containers are shaped in a way that they cannot be interchanged.

▶ Place the container at an angle on the pull-out board. *Fig. 90 (13)*
▶ Slide the container to the back at an angle. *Fig. 90 (14)*
▶ Place container in the front. *Fig. 90 (15)*

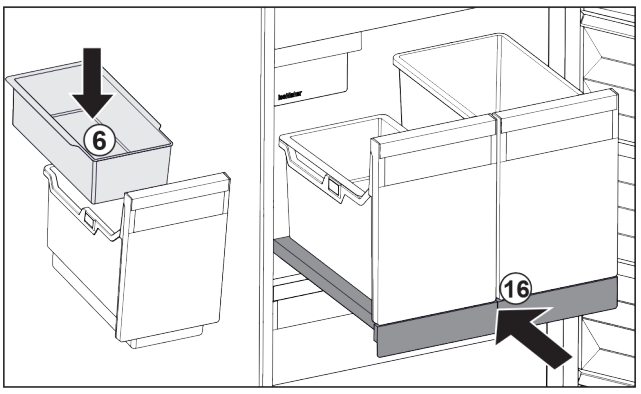

Fig. 91

▶ Insert hang-on tray *Fig. 91 (6)* for ice cubes.

▶ Slide in the pull-out board with (IceTower) container. *Fig. 91 (16)*
▷ Pull-out shelf with IceTower is fully inserted.

8.3 Glass shelves

NOTICE
Impermissible removal of the glass panel above the IceTower!
Damage to the IceMaker. The IceMaker is attached to the glass panel above the IceTower.
▶ Do not remove the glass panel above the IceTower.

You can remove the glass shelves under the drawers for cleaning.

You can remove the glass shelves under the drawers to use VarioSpace.

8.3.1 Removing / inserting the glass shelf under the tilting drawer

The glass shelf is located under the top tilting drawer.

Make sure that the following requirements are fulfilled:

❑ Drawer has been removed. (see 8.1.3 Top tilting drawer)

Removing glass shelf

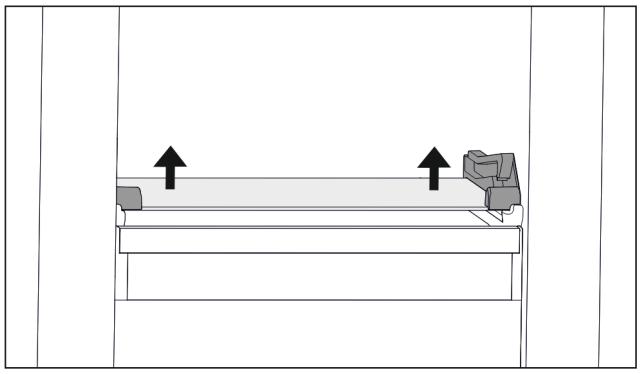

Fig. 92 Tilting drawer glass shelf

▶ Push glass shelf upwards from below on both sides. (see Fig. 92)
▶ Take out the glass shelf to the front.

Inserting glass shelf

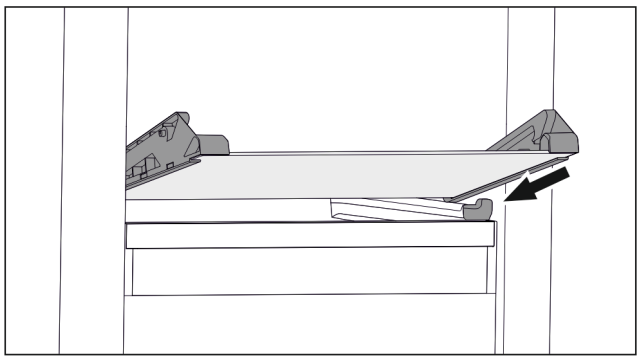

Fig. 93 Tilting drawer glass shelf

▶ Position glass shelf at an angle behind the stoppers. (see Fig. 93)
▶ Lower glass shelf.
▶ Slide in glass shelf to the back.
▷ Glass shelf clicks into place.

8.3.2 Removing / inserting the glass shelf

Depending on the equipment, the glass shelf may be located under the drawer.

Depending on the equipment, the glass shelf may be located under the IceTower.

Make sure that the following requirements are fulfilled:

❑ Glass shelf under the drawer: The drawer has been removed. (see 8.1 Drawers)
❑ Pull-out board under IceTower: IceTower has been removed. (see 8.2 Pull-out board with IceTower)

Removing glass shelf

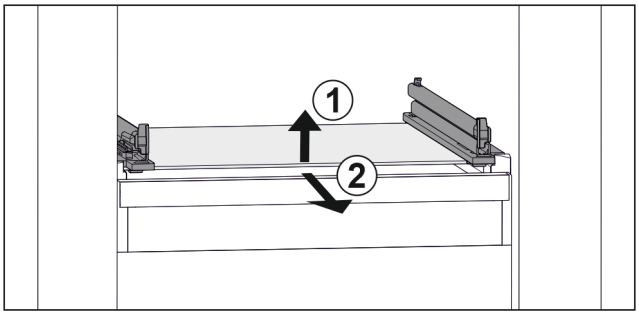

Fig. 94 Example illustration of glass shelf

▶ Lift glass shelf at the front. *Fig. 94 (1)*
▶ Take out glass shelf to the front. *Fig. 94 (2)*

Inserting glass shelf

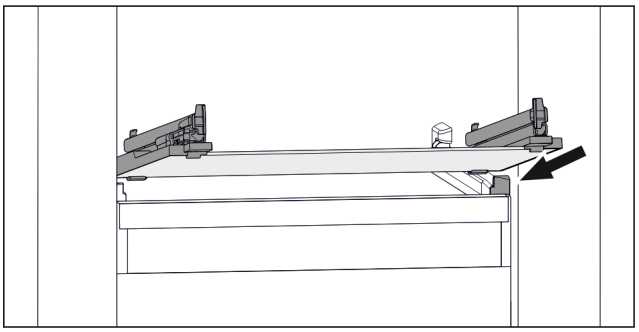

Fig. 95 Example illustration of glass shelf

▶ Position glass shelf at an angle behind the stoppers. (see Fig. 95)
▶ Lower glass shelf.
▶ Slide in glass shelf to the back.

8.4 IceMaker

The IceMaker will produce ice cubes for household use only.

Ensure that the following conditions are met:

- IceMaker is cleaned (see 9 Maintenance) .
- IceMaker drawer is cleaned.
- IceMaker drawer is fully inserted.

8.4.1 Producing ice cubes

The volume depends on the freezing temperature. The colder the temperature, the more ice cubes the system can produce in a certain time period.

After the IceMaker is turned on for the first time, it can take up to 24 hours for the first ice cubes to be made.

▶ Activate the IceMaker function .
▶ To make a high number of ice cubes: Activate the MaxIce function .
▶ To make a high number of ice cubes: Move the divider in the IceMaker drawer or remove it completely.
▶ Distribute the ice cubes evenly in the drawer to increase the capacity.
▶ Closing the drawer: IceMaker starts making ice cubes again automatically.

Note
When a certain level is reached in the IceMaker drawer, it stops producing ice cubes. The IceMaker does not fill the drawer all the way to the top.

8.5 VarioSpace

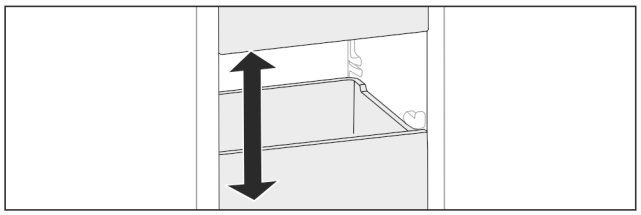

Fig. 96

You can remove drawers and glass panels from your appliance. This provides more room for large food items such as poultry, joints of meat, large game, and tall baked products. You can then freeze these items whole for later preparation.

▶ Note the weight limits on the drawers and glass panels (see 10.1 Technical specifications) .

8.6 Freezer pack

Freezer packs prevent the temperature rising too quickly should there be a power cut.

The freezer packs are in the drawer.

You can store the freezer packs in the freezer tray.

8.6.1 Using the freezer pack

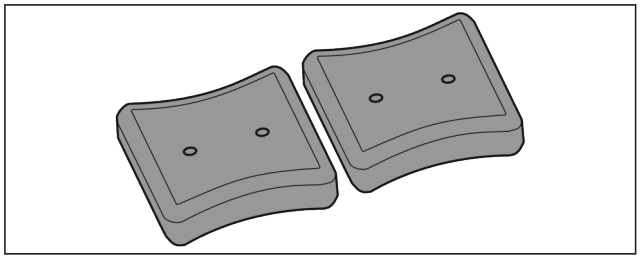

Fig. 97

When the freezer packs are fully frozen:

▶ Place on the frozen goods in the top, front part of the freezer.

8.7 Flexible ice compartment divider

The IceMaker's ice cube drawer has a flexible ice compartment divider. This allows you to store larger quantities of ice cubes or additional food items as needed. You can move or remove the ice compartment divider.

8.7.1 Moving in the flexible ice compartment divider

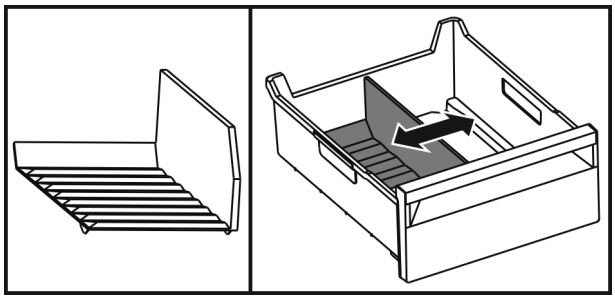

Fig. 98 Example illustration of the ice compartment divider

▶ Move the ice compartment divider to the desired position.

8.7.2 Removing the flexible ice compartment divider

Make sure that the following requirements are fulfilled:

❑ Ice cube drawer is removed. (see 8.1 Drawers)

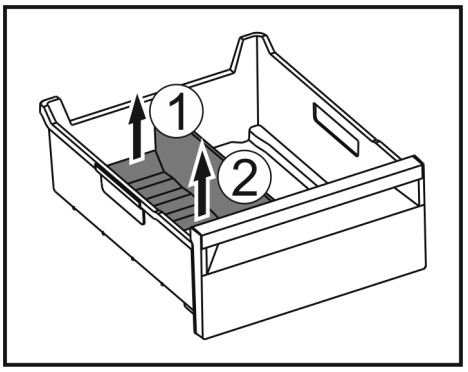

Fig. 99

▶ Lift the rear part of the ice compartment divider. *Fig. 99 (1)*

▶ Remove the ice compartment divider upwards. *Fig. 99 (2)*

8.7.3 Putting in the flexible ice compartment divider

Make sure that the following requirements are fulfilled:

❑ Ice cube drawer is removed. (see 8.1 Drawers)

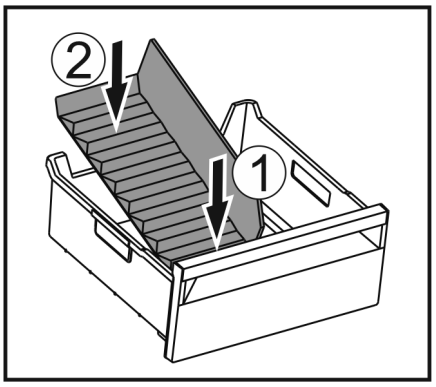

Fig. 100

▶ Insert the front part of the ice compartment divider. *Fig. 100 (1)*

▶ Lower the rear part of the ice compartment divider to the drawer bottom. *Fig. 100 (2)*

9 Maintenance

9.1 Disassembling / assembling pull-out systems

9.1.1 Notes on disassembly

You can disassemble some of the pull-out systems for cleaning. Your appliance can contain a variety of pull-out systems.

The following pull-out systems can be disassembled or cannot be disassembled:

Pull-out system	can be disassembled / cannot be disassembled
Drawer on appliance base or glass shelf	cannot be disassembled
Drawer on glass shelf	can be disassembled (see Drawer on glass shelf)
Top tilting drawer	can be disassembled (see 9.1.3 Top tilting drawer)
Drawer on moulded rib	can be disassembled (see 9.1.4 Drawer on moulded rib)
IceTower	can be disassembled (see 9.1.5 IceTower)

9.1.2 Drawer on telescopic rails

Drawer on glass shelf

Disassembling pull-out system

Make sure the following prerequisites are met:

❑ Drawer has been removed.

❑ Glass shelf has been removed. (see 8.3 Glass shelves)

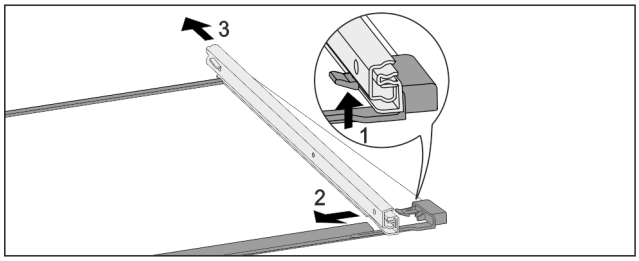

Fig. 101 Glass shelf with rails

▶ Push up front click-in hooks. *(1)*

▶ Move pull-out rails to the side *(2)* and to the rear *(3)*.

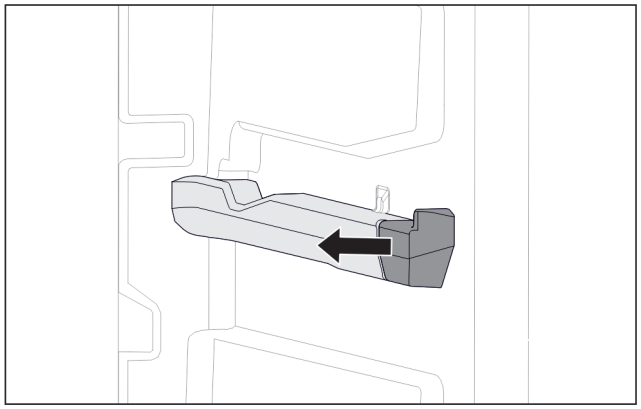

Fig. 102 Attachment on the right moulded rib

▶ Remove moulded rib attachment sideways.

Installing pull-out system

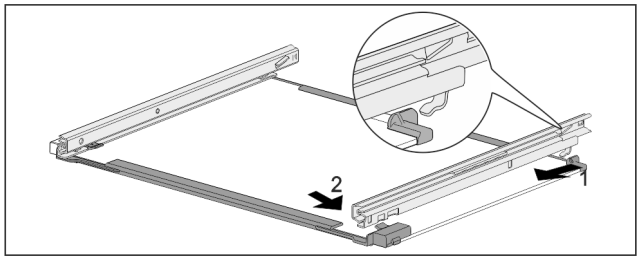

Fig. 103 Glass shelf with rails

▶ Hook in rail at the back. *(1)*

▶ Hook in rail at the front. *(2)*

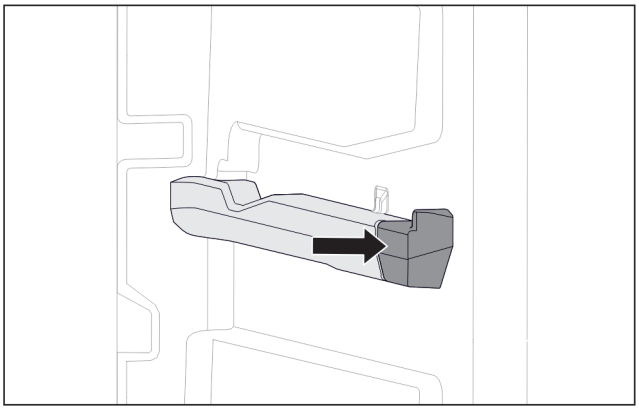

Fig. 104 Attachment on the right moulded rib

▶ Press attachment onto moulded rib.

9.1.3 Top tilting drawer

Disassembling pull-out system

Make sure the following prerequisites are met:

❑ Drawer has been removed. (see 8.1.3 Top tilting drawer)

❑ Glass shelf has been removed. (see 8.3 Glass shelves)

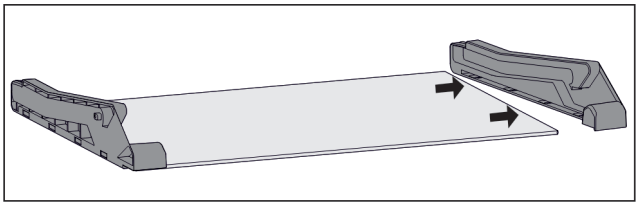

Fig. 105 Glass shelf with side parts

▶ Pull off side part from glass shelf sideways.

Installing pull-out system

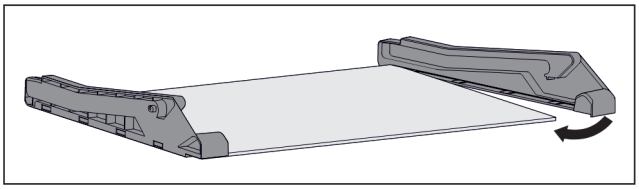

Fig. 106 Glass shelf with side parts

▶ Place on side part at the back.

▶ Press side part onto glass shelf at the front.

9.1.4 Drawer on moulded rib

Disassembling pull-out system

Make sure the following prerequisites are met:

❑ Drawer has been removed. (see 8.1.4 Drawer on moulded rib)

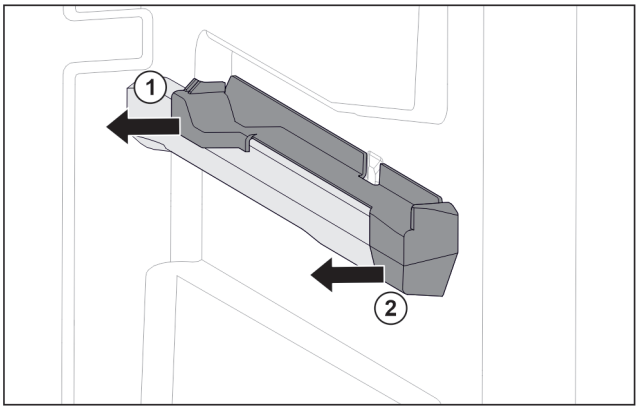

Fig. 107 Attachment on the right moulded rib

▶ Grab attachment at the back from below.

▶ Pull off attachment at the back sideways. *Fig. 107 (1)*
▶ Pull off attachment at the front sideways. *Fig. 107 (2)*

Installing pull-out system

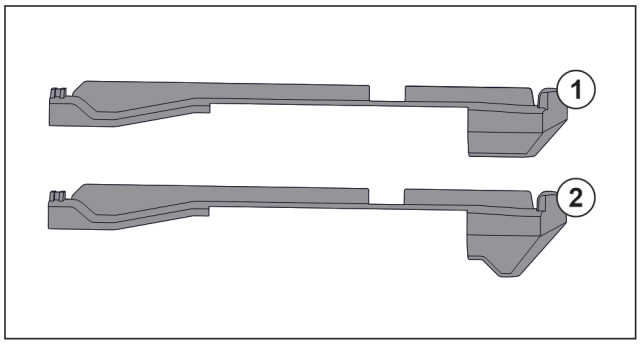

Fig. 108 Comparing attachments

There are two different attachments in the appliance. The attachment above the lowest drawer *Fig. 108 (2)* has a three-cornered edge. All other attachments *Fig. 108 (1)* have a straight edge.

▶ Fit attachment *Fig. 108 (2)* with the three-cornered edge above the lowest drawer.
▶ Fit attachment *Fig. 108 (1)* with straight edge in all other positions.

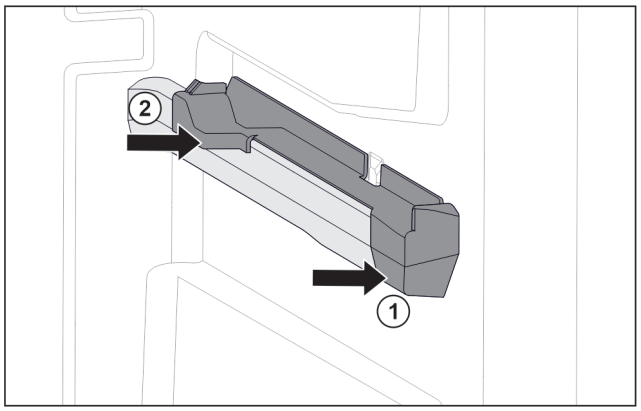

Fig. 109 Attachment on the right moulded rib

▶ Position attachment on moulded rib at the front. *Fig. 109 (1)*
▶ Press on attachment at the back. *Fig. 109 (2)*

9.1.5 IceTower

Disassembling pull-out system

Make sure the following prerequisites are met:

❑ IceTower has been removed. (see 8.2 Pull-out board with IceTower)
❑ Glass shelf has been removed. (see 8.3 Glass shelves)

▶ Place pull-out board on a table.
▷ You are able to remove the rails more easily from the glass shelf.

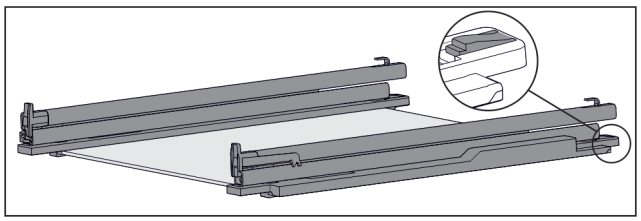

Fig. 110 Glass shelf with rails and retaining parts

▶ Press down retaining part at the rear (see Fig. 110) and at the same time push the rail back.

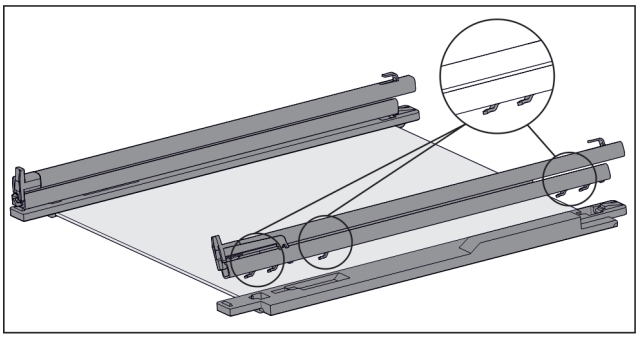

Fig. 111 Glass shelf with rails and retaining parts

▷ The rail hooks are released from the retaining part.
▶ Remove rail from retaining part.

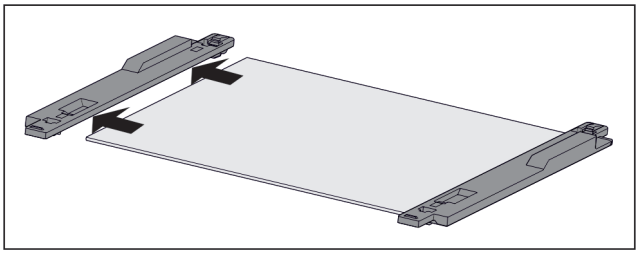

Fig. 112 Glass shelf with retaining part

▶ Remove retaining part from glass shelf sideways.

Installing pull-out system

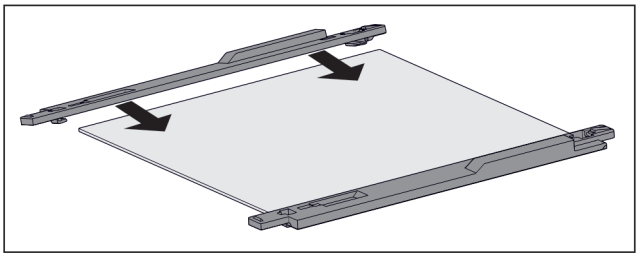

Fig. 113 Glass shelf with retaining part

▶ Fit retaining part on glass shelf.
▶ Push retaining part onto glass shelf as far as it will go.

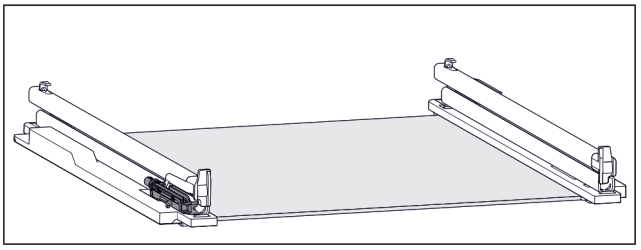

Fig. 114 Damping mechanism

The damping mechanism is attached to the left rail. (see Fig. 114) There is no damping mechanism attached to the right rail.

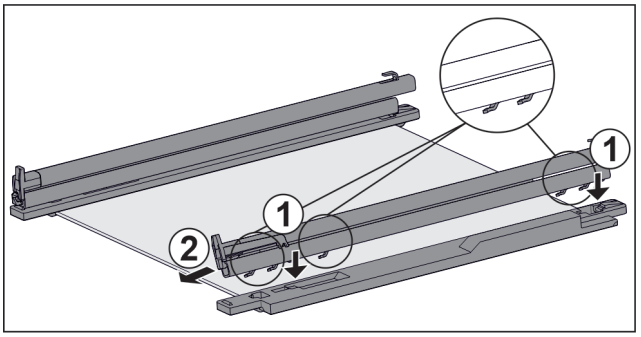

Fig. 115 Glass shelf with rails and retaining parts

Install rail **with** damping mechanism:

▶ Place rail hooks onto the openings of the **left** retaining part. *Fig. 115 (1)*
▶ Push rail forwards. *Fig. 115 (2)*
▷ Rail latches in audibly.
Install rail **without** damping mechanism:
▶ Place rail hooks onto the openings of the **right** retaining part. *Fig. 115 (1)*
▶ Push rail forwards. *Fig. 115 (2)*
▷ Rail latches in audibly.

9.2 Defrosting the appliance

9.2.1 Defrosting with NoFrost

Defrosting is performed automatically with the NoFrost system. The moisture is deposited on the evaporator, is periodically defrosted and evaporates.

The appliance does not need to be defrosted.

9.3 Cleaning the appliance

9.3.1 Ready

WARNING
Danger of electric shock!
▶ Remove the refrigerator connector or interrupt the power supply.

WARNING
Risk of fire
▶ Do not damage the refrigeration circuit.

▶ Empty the appliance.
▶ Remove mains connector.

9.3.2 Cleaning the interior

NOTICE
Improper cleaning!
Damage to the appliance.
▶ Only use soft cleaning cloths and ph-neutral all-purpose cleaners.
▶ Do not uses abrasive sponges or steel wool which may cause scratches.
▶ Do not use any sharp or abrasive cleaning agents, nor any that contain sand, chloride or acid.

▶ Plastic surfaces: clean by hand with a soft clean cloth, lukewarm water and a little detergent.
▶ Metal surfaces: clean by hand with a soft clean cloth, lukewarm water and a little detergent.

9.3.3 Clean the components

NOTICE
Improper cleaning!
Damage to the appliance.
▶ Only use soft cleaning cloths and ph-neutral all-purpose cleaners.
▶ Do not uses abrasive sponges or steel wool which may cause scratches.
▶ Do not use any sharp or abrasive cleaning agents, nor any that contain sand, chloride or acid.

Clean with a soft, clean cloth, lukewarm water and some detergent:

- IceTower pull-out board
- Drawer
  Please note: Do not remove the magnet on the drawer. The magnet ensures the functionality of the IceMaker.
- Divider in the IceMaker drawer
- Freezer tray

Clean with a damp cloth:

- Retractable rails
  Please note: The grease in the tracks is used for lubrication and must not be removed!

Wash in the dishwasher up to 60 °C:

- Ice cube scoop

▶ To disassemble components: see the relevant section.
▶ Clean the components.

9.3.4 Cleaning the IceMaker

There are various options for cleaning the IceMaker.

Cleaning is required in the following cases:

❑ Initial operation
❑ With mains connection:
If out of use for more than 5 days.

Ensure that the following conditions are met:

❑ IceMaker drawer is emptied.
❑ IceMaker drawer is in place.
❑ The IceMaker is activated.

First use or after a long period of non-use

Clean the IceMaker with the TubeClean function.
▶ Put an empty 1.5 l vessel (max. height 10 cm) in the drawer under the IceMaker.
▶ Activate the TubeClean function.
▷ The rinse process is prepared (max. 60 min.): Symbol flashes.
▷ Water pipes are rinsed: Symbol flashes.
▷ Rinsing process is complete: Function turns off automatically.
▶ Remove the IceMaker drawer and remove the container.
▶ Clean the IceMaker drawer with warm water and a little detergent.
▶ Push the IceMaker drawer in.
▷ The system starts making ice cubes automatically.
▶ Dispose of any ice cubes that were made 24 hours after the first ice cubes.

If cleaning is required

Clean the IceMaker by hand.
▶ Remove the IceMaker drawer and clean with warm water and a little detergent.
▶ Push the IceMaker drawer in.
▷ The system starts making ice cubes automatically.

9.3.5 After cleaning

▶ Wipe the appliance and the components dry.
▶ Connect and switch on the appliance.
▶ Activate SuperFrost (see 7.2 Appliance functions) .
The temperature is cold enough:
▶ Place the food inside.
▶ Repeat cleaning regularly.

10 Customer help

10.1 Technical specifications

Temperature range	
Freeze	-28 °C to -15 °C

Maximum freezing quantity/24 h	
Freezer compartment	See “Freezing capacity .../24 h” on the type plate

Maximum component capacity			
Features	Appliance width 550 mm (see installation instructions, appliance dimensions)	Appliance width 600 mm (see installation instructions, appliance dimensions)	Appliance width 700 mm (see installation instructions, appliance dimensions)
Drawer on glass shelf (see 8.1.1 Drawer on appliance base or glass shelf)	12 kg	15 kg	--
Drawer on moulded rib (see 8.1.4 Drawer on moulded rib)	14 kg	19 kg	19 kg
Drawer on glass shelf (see 8.1.2 Drawer on telescopic rails)	12 kg	15 kg	22 kg

Ice cube production with IceMaker	
Ice cube production/24 h	At a temperature of -18 °C: 0.8 kg of ice cubes
Maximum ice cube production/24 h	With the MaxIce function on: 1.2 kg of ice cubes

Lighting	
Class[1]	Light source
This product contains one or more energy efficiency class G light sources.	LED

[1] The appliance may contain light sources with different energy efficiency classes. The lowest energy efficiency class is indicated.

For appliances with a WiFi connection:

Frequency specification	
Frequency band	2.4 GHz
Maximum radiated power	< 100 mW
Purpose of the wireless equipment	Integration in the local WiFi network for data communication

10.2 Operating noises

The appliance makes different noises when it is on.

- At **higher temperatures** the appliance uses less energy but works for longer. It is **quieter**.
- At **lower temperatures** the food is cooled faster. It is **louder**.

Examples:

- Functions on (see 7.2 Appliance functions)
- Fan running
- Food recently added
- High ambient temperature
- Door open for a while

Noise	Possible cause	Type of noise
Bubbling and splashing	Coolant flowing into the cooling circuit.	Normal operating noise
Hissing	Coolant sprays into the cooling circuit.	Normal operating noise
Humming	The appliance is cooling. The volume depends on the cooling output.	Normal operating noise
Suction noises	Soft-closing door is being opened and closed.	Normal operating noise
Humming and rustling	The fan is running.	Normal operating noise
Clicking	Components are switched on and off.	Normal switching noise
Rattling or humming	Valves or flaps are working.	Normal switching noise

Noise	Possible cause	Type of noise	Lifting
Vibration	Improper installation	Defective noise	Check the installation. Level the appliance.
Rattling	Components, items inside the appliance	Defective noise	Secure components. Leave enough space between the items.

10.3 Technical fault

Your appliance is designed and built to ensure it works reliably and has a long service life. In the unlikely event that a fault occurs during operation, please check whether it is due to an operating error. If so, you will be charged for the callout and repair costs even if it falls within the warranty period.

You can fix the following faults yourself.

10.3.1 Appliance function

Defect	Cause	Remedy
The appliance is not working.	→ The appliance is not switched on.	▶ Switch the appliance on.
	→ The power plug is not properly plugged into the socket.	▶ Check the power plug.
	→ There is something wrong with the power outlet fuse.	▶ Check the fuse.
	→ Power cut	▶ Keep the appliance closed. ▶ Protecting food: Lay freezer packs on top of the food or use another freezer if the power is off for a prolonged period. ▶ Do not re-freeze defrosted food,
	→ The appliance plug does not fit the appliance properly.	▶ Check the appliance plug.
Temperature is not cold enough.	→ The appliance door is not closed properly.	▶ Close the appliance door.
	→ Not enough ventilation.	▶ Keep ventilation grille clear, and clean it.
	→ The ambient temperature is too high.	▶ Problem solution: (see 1.4 Appliance range of use)
	→ The appliance was opened too many times or for too long.	▶ Wait to see if the required temperature corrects itself. If not, contact Customer Service. (see 10.4 Customer Service)
	→ Too much fresh food was placed inside without SuperFrost.	▶ Solution: (see SuperFrost)
	→ The temperature is set incorrectly.	▶ Turn down the temperature and check after 24 hours.
	→ The appliance is too close to a heat source (oven, radiator, etc).	▶ Move the appliance or the heat source.
	→ The appliance was not correctly installed in the recess.	▶ Check if the appliance was installed correctly and that the door closes properly.
The door seal is defective or needs to be replaced for another reason.	→ The door seal can be replaced. It can be replaced without the need for special tools.	▶ Contact Customer Service. (see 10.4 Customer Service)
The appliance builds up too much ice or condensation.	→ The door seal may have slipped out of its groove.	▶ Check that the door seal is well fitted in the groove.

10.3.2 Features

Defect	Cause	Remedy
You cannot activate the IceMaker.	→ The appliance and therefore the IceMaker are not connected.	▶ Connect the appliance (see the Installation Guide).
The IceMaker is not producing ice cubes.	→ The IceMaker is not on.	▶ Activate the IceMaker.
	→ The drawer of the IceMakers is not connected properly.	▶ Push the drawer in correctly.
	→ The water connection is not open.	▶ Open the water connection.
The internal light does not come on.	→ The appliance is not switched on.	▶ Switch the appliance on.
	→ The door was open for longer than 15 minutes.	▶ Interior lighting turns off automatically after approx. 15 min. with the door open.

Defect	Cause	Remedy
	→ The LED interior light is faulty or the lid is damaged.	▶ Contact Customer Service. (see 10.4 Customer Service)

10.4 Customer Service

First check whether you can rectify the fault yourself (see 10 Customer help) . If you cannot rectify the problem, contact Customer Service.

You can find the address in the enclosed brochure “Liebherr-Service” or at home.liebherr.com/service.

WARNING
Unprofessional repair!
Injuries.
- ▶ Have any repairs and action - not expressly specified - on the appliance and mains cable carried out by service personnel only. (see 9 Maintenance)
- ▶ A damaged mains cable may only be replaced by the manufacturer, the manufacturer’s Customer Service or a similarly qualified person.
- ▶ In the case of appliances with an IEC connector, the change may be made by the customer.

10.4.1 Contacting Customer Service

Make sure that the following appliance information is available:

- ❑ Appliance name (model and index)
- ❑ Service no. (Service)
- ❑ Serial no. (S no.)

▶ Call up the appliance information via the display. (see Device information)

-or-

▶ Refer to the type plate for appliance information. (see 10.5 Model plate)

▶ Note down the appliance information.
▶ Notify customer service: Report errors and the appliance information.
▷ This will help us to provide you with a faster, more accurate service.
▶ Follow further instructions from Customer Service.

10.5 Model plate

The model plate is behind the drawers on the inside of the appliance.

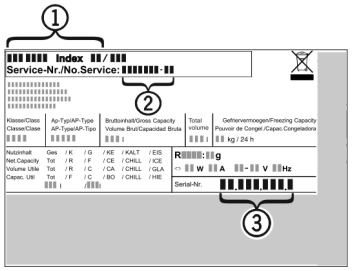

Fig. 116

(1) Appliance description **(3)** Serial no.
(2) Service no.

▶ Note the data on the model plate.

11 Shutting down

▶ Empty the appliance.
▶ Deactivate IceMaker. (see Deactivating the IceMaker / MaxIce)
▶ Switch off appliance. (see Turn off appliance)
▶ Remove mains connector.
▶ Remove appliance connector if required: Remove and move from left to right at the same time.
▶ Clean appliance. (see 9.3 Cleaning the appliance)
▶ Leave the door open, so that no unpleasant odours arise.

12 Disposal

12.1 Preparing appliance for disposal



Liebherr uses batteries in some of its appliances. In the EU, for environmental reasons, legislation obliges the end user to remove these batteries before disposing of old appliances. If your appliance contains batteries, a corresponding notice is attached.

Lamps — If you can remove the lamps yourself without destroying them, also remove these before disposal.

▶ Take the appliance out of operation.
▶ Appliances with batteries: remove the batteries. For description, see **Maintenance** chapter.
▶ If possible: remove lamps without destroying them.

12.2 Disposing of the appliance in an environmentally friendly manner



The appliance still contains valuable materials and must be disposed of separately from unsorted municipal waste.





Dispose of batteries separately from the old appliance. To do this, you can return the batteries free of charge to retailers as well as recycling centres and collection centres for recyclable materials.

Lamps — Dispose of removed lamps via the respective collection systems.

For Germany:	You can dispose of the appliance free of charge via the class 1 collection containers at the local recycling and recyclable material collection centres. When purchasing a new fridge/freezer, if the sales area > 400 m^2, retailers will also take back the old appliance free of charge.

WARNING
Leaking coolant and oil!
Fire. The coolant contained in the appliance is eco-friendly, but also flammable. The oil contained in the appliance is flammable. Escaping coolant and oil can ignite if the concentration is high enough and in contact with an external heat source.
▶ Do not damage the pipelines of the coolant circuit and the compressor.

▶ Transport the appliance without damaging it.
▶ Dispose of batteries, lamps and the appliance according to the above specifications.



home.liebherr.com/fridge-manuals

EN Integrated freezer

Issue date: 20240205

Part number index: 7088438-00

Liebherr-Hausgeräte GmbH
Memminger Straße 77-79
88416 Ochsenhausen
Deutschland

User Guide

Quality, Design and Innovation

home.liebherr.com/fridge-manuals

LIEBHERR

Contents

1 Appliance at a glance ... 3
1.1 Scope of delivery ... 3
1.2 Overview of appliances and equipment ... 3
1.3 SmartDevice ... 4
1.4 Appliance range of use ... 4
1.5 Conformity ... 4
1.6 SVHC substances according to REACH regulation. 4
1.7 EPREL database ... 4

2 General safety instructions ... 4

3 Functionality of the Touch & Swipe display ... 6
3.1 Navigation and symbol explanation ... 6
3.2 Menus ... 6
3.3 Sleep mode ... 7

4 Putting into operation ... 7
4.1 Switching on appliance (first use) ... 7

5 Storage ... 8
5.1 Information regarding storage ... 8
5.2 Fridge compartment ... 8
5.3 BioFresh ... 8
5.4 Storage times ... 9

6 Saving energy ... 9

7 Controls ... 9
7.1 Controls and displays ... 9
7.1.1 Status display ... 9
7.1.2 Display symbols ... 10
7.2 Appliance functions ... 10
7.2.1 Notes on the appliance functions ... 10
Turn off appliance ... 10
WiFi ... 10
Temperature ... 11
Temperature unit ... 11
BioFresh B-Value ... 12
D-Value ... 12
SuperCool ... 12
PartyMode ... 12
HolidayMode ... 12
SabbathMode ... 13
EnergySaver ... 13
CleaningMode ... 14
Display brightness ... 14
Door alarm ... 14
Input lock ... 15
Language ... 15
Device information ... 15
Software ... 16
Reminder ... 16
Demo mode ... 16
Resetting to factory settings ... 17
7.3 Fault messages ... 17
7.3.1 Warnings ... 17

8 Features ... 17
8.1 Adjustable bottle shelf ... 17
8.2 Drawers ... 18
8.3 Fruit & Vegetable safe cover ... 18
8.4 Adjusting the moisture levels ... 19
8.5 Glass shelves ... 19
8.6 Butter dish ... 20
8.7 Egg rack ... 20
8.8 FlexSystem ... 20

9 Maintenance ... 21
9.1 FreshAir carbon filter ... 21
9.2 Disassembling / assembling pull-out systems ... 21
9.3 Defrosting the appliance ... 22
9.4 Cleaning the appliance ... 22

10 Customer help ... 22
10.1 Technical specifications ... 22
10.2 Operating noises ... 23
10.3 Technical fault ... 23
10.4 Customer Service ... 24
10.5 Model plate ... 25

11 Shutting down ... 25

12 Disposal ... 25
12.1 Preparing appliance for disposal ... 25
12.2 Disposing of the appliance in an environmentally friendly manner ... 25

The manufacturer is continually working on the further development of all types and models. Please be aware that we reserve the right to make changes to the shape, equipment and technology.

Symbol	Explanation
	**Read instructions** Please read the information in these instructions carefully to understand all of the benefits of your new appliance.
	**Full instructions on the internet** You can find detailed instructions on the internet using the QR code on the front of these instruction or by entering the service number at **home.liebherr.com/fridge-manuals**. The service number can be found on the serial tag: 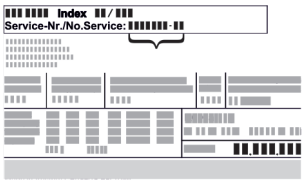 *Fig.* Example illustration

Symbol	Explanation
	Check appliance Check all parts for transport damage. If you have any complaints, please contact your agent or customer service.
	Differences These instructions apply to a range of models, so differences are possible. Sections that apply to certain models only are marked with an asterisk (*).
	Instructions and results Instructions are marked with a ▶. Results are marked with a ▷.
	Videos Videos about the appliances are available on the YouTube channels of Liebherr-Hausgeräte.

These operating instructions apply to:

IRBP..i	5170
IRBPbsci	5170

1 Appliance at a glance

1.1 Scope of delivery

Check all parts for transport damage. Contact your dealer or customer service in the event of complaints. (see 10.4 Customer Service)

Your new appliance comes with the following parts:
- Built-in appliance
- Features (depending on the model)
- Installation materials (depending on the model)
- “Quick Start Guide”
- “Installation Guide”
- Service Brochure

1.2 Overview of appliances and equipment

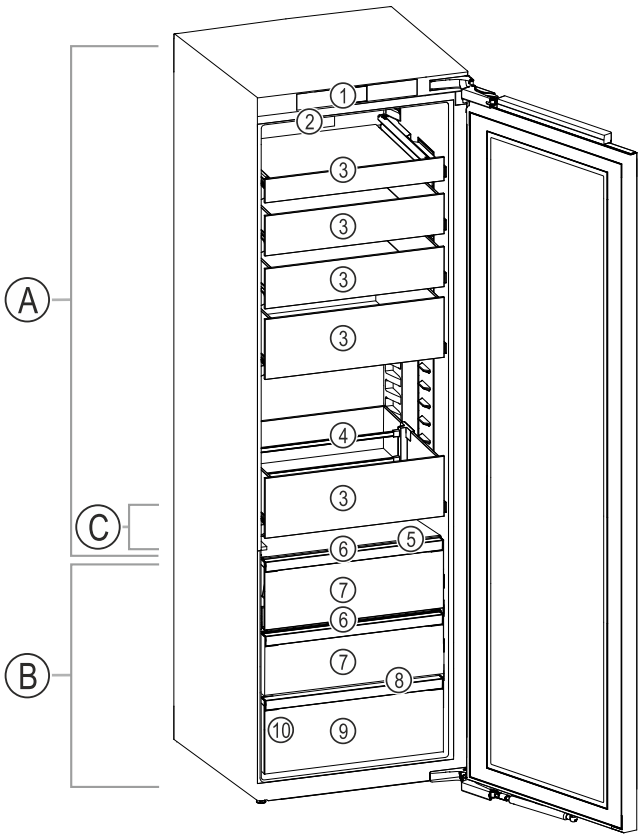

Fig. 1 Example illustration

Temperature range

(A) Fridge compartment
(B) BioFresh
(C) Coldest zone

Equipment

(1) Controls
(2) Fan with FreshAir activated charcoal filter
(3) Glass drawer
(4) Bottle holder
(5) Variable bottle shelf
(6) Lid for Fruit & Vegetable safe
(7) Fruit & Vegetable safe
(8) Drain hole
(9) Meat & Dairy safe
(10) Type plate

Notes on loading

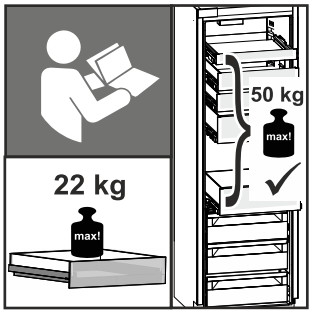

Fig. 2

An individual drawer may only be loaded to a maximum of 22 kg.

The total load is a maximum of 50 kg when you pull **all the drawers out at the same time**.

Note

▶ Shelves, drawers and baskets are arranged for optimum energy efficiency when the appliance is delivered. Changing how the shelves, for example, are inserted in the fridge compartment does not have any impact on energy consumption.

1.3 SmartDevice

SmartDevice is the networking solution for your refrigerator.

If your appliance SmartDevice-enabled or compatible, you can quickly and easily connect your appliance to your WiFi. With the SmartDevice app, you can operate your appliance from a mobile device. Additional functions and setting options are available in the SmartDevice SmartDevice app.

SmartDevice-enabled appliance:	Your appliance is capable of being a SmartDevice. To be able to connect your device to WiFi, you need to download the SmartDevice app.



More information about SmartDevice:	**smartdevice.liebherr.com**
Downloading the SmartDevice app:	

After installing and configuring the SmartDevice, you can connect your appliance to the WiFi using the SmartDevice app and the WiFi appliance function (see WiFi) .

Note
The SmartDevice function is not available in the following countries: Russia, Belarus, Kazakhstan.

1.4 Appliance range of use

Intended use

The appliance is only suitable for cooling food products in a domestic or household-like environment. This includes, for example, use:

- in staff kitchens, bed and breakfast establishments,
- by guests in country houses, hotels, motels and other accommodation,
- for catering and similar services in the wholesale trade.

The appliance is not suitable for freezing food;

All other types of use are not permitted.

Foreseeable misuse

The following applications are expressly forbidden:

- Storing and refrigerating medicines, blood plasma, laboratory preparations or similar substances and products based on the Medical Device Directive 2007/47/EC
- Use in areas at risk of explosions

Misusing the appliance may lead to damage to the goods stored or they may spoil.

Climate classifications

Depending on the climate classification the appliance is designed to operate in restricted ambient temperatures. The climate classification applying to your appliance is printed on the rating plate.

Note

▶ Keep to the specified ambient temperatures in order to guarantee that the appliance works properly.

Climate classification	for ambient temperatures of
SN	10 °C to 32 °C
N	16 °C to 32 °C
ST	16 °C to 38 °C
T	16 °C to 43 °C
SN-ST	10 °C to 38 °C
SN-T	10 °C to 43 °C

1.5 Conformity

The refrigerant circuit has been tested for leaks. When installed, the appliance complies with the applicable safety regulations and with the corresponding directives.

For the market:	EU	The appliance complies with directive 2014/53/EU.
For the market:	GB	The appliance complies with Radio Equipment Regulations 2017 SI 2017 No. 1206.

The full text of the EU Declaration of Conformity is available on the following website: www.Liebherr.com

The BioFresh compartment meets the requirements of a cold storage compartment as set out in DIN EN 62552:2020.

1.6 SVHC substances according to REACH regulation

You can check whether your appliance contains SVHC substances according to REACH regulation at the following link: home.liebherr.com/de/deu/de/liebherr-erleben/nachhaltigkeit/umwelt/scip/scip.html

1.7 EPREL database

Details about energy labelling and ecodesign requirements will be available on the European product database (EPREL) from 1st March 2021. You can access the product database at the following link: https://eprel.ec.europa.eu/ You will be asked to enter the model ID. You can find the model ID on the nameplate.

2 General safety instructions

Please keep these operating instructions in a safe place so you can refer back to them at any time.

If you pass the appliance on, please hand these operating instructions to the next user.

Read these operating instructions carefully before use to ensure safe and correct use of the appliance. Follow the instructions, safety instructions and warning messages included at all times. They are important for ensuring you can operate and install the appliance safely and without any problems.

Danger for the user:

- This device can be used by children and people with impaired physical, sensory or mental abilities or with a lack of experience and knowledge provided that they are supervised or have received instruction in the safe use of this device, and about the resulting hazards. Children must not play with this appliance. Cleaning and user maintenance work must not be carried out by children without adult supervision. Children aged between 3 and 8 are allowed to load and unload the appliance. Children below the age of 3 must be kept away from the appliance unless they are under continuous adult supervision.
- The socket must be easily accessible so that the appliance can be disconnected quickly from the electricity in an emergency. It must not be located in the area behind the appliance.
- When disconnecting the appliance from the supply, always take hold of the plug. Do not pull the cable.
- In the event of a fault pull out the mains plug or deactivate the fuse.
- Do not damage the mains power cable. Do not operate the appliance with a defective mains power cable.
- Only customer service or other specially trained staff may repair or perform other operations on the appliance.
- Only install, connect and dispose of the appliance according to the instructions.
- Only use the appliance when is installed.

Fire hazard:

- The coolant used (information on the model plate) is ecofriendly but also flammable. Any leaking coolant may ignite.
  - Do not damage the refrigerant circuit pipes.
  - Do not handle ignition sources inside the appliance.
  - Do not use electrical appliances inside the appliance (e.g. steam cleaners, heaters, ice cream makers, etc.).
  - If the refrigerant leaks: remove any naked flames or ignition sources from the vicinity of the leakage point. Properly air the room. Inform customer services.
- Do not store explosives or sprays using combustible propellants such as butane, propane, pentane, etc. in the appliance. To identify these spray cans, look for the list of contents printed on the can, or a flame symbol. Gases possibly escaping may ignite due to electrical components.
- Keep burning candles, lamps and other items with naked flames away from the appliance so that they do not set the appliance on fire.
- Please be sure to store alcoholic drinks or other packaging containing alcohol in tightly closed containers. Any alcohol that leaks out may be ignited by electrical components.

Danger of tipping and falling:

- Do not misuse the plinth, drawers, doors etc. as a step or for support. This applies particularly to children.

Danger of food poisoning:

- Do not consume food which has been stored too long.

Danger of frostbite, numbness and pain:

- Avoid prolonged skin contact with cold surfaces or refrigerated/frozen goods or take protective measures, e.g wear gloves.

Danger of injury and damage:

- Hot steam can lead to injury. Do not use electrical heating or steam cleaning equipment, open flames or defrosting sprays to defrost.
- Do not use sharp implements to remove the ice.

Risk of crushing:

- Do not hold the hinge when opening and closing the door. Fingers may get caught.

Symbols on the appliance:



This symbol may be located on the compressor. It relates to the oil in the compressor and makes reference to the risk that: Swallowing or inhaling can be fatal. This advice is only relevant to recycling. There is no danger in normal operation.



This symbol is located on the compressor and indicates the danger of flammable materials. Do not remove the sticker.



This or a similar sticker may be located on the rear of the appliance. This sticker indicates that there are vacuum insulation panels (VIP) or perlite panels in the door and/or housing. This advice is only relevant to recycling. Do not remove the sticker.

Please note the warning messages and other specific advice in the other chapters:

⚠	DANGER	indicates an immediately hazardous situation which will lead to death or serious injuries if it is not avoided.
⚠	WARNING	indicates a hazardous situation which may lead to death or serious injuries if it is not avoided.
⚠	CAUTION	indicates a hazardous situation which may lead to minor or moderate injuries if it is not avoided.
	NOTICE	indicates a hazardous situation which may lead to damage to property if it is not avoided.
	Note	indicates useful instructions and tips.

3 Functionality of the Touch & Swipe display

You operate your appliance using the Touch & Swipe display. You select appliance functions in the Touch & Swipe display (hereafter referred to as display) by tapping them. If you do not perform any action on the display for 10 seconds, the display either jumps back to the higher-level menu or directly to the status display.

3.1 Navigation and symbol explanation

In the illustrations, different symbols are used to navigate the display. The following table describes these symbols.

Symbol	Description
	**Briefly touch the display:** Activates/deactivates function. Confirms selection. Opens submenu.
	**Touch the display for a specified time (e.g. 3 seconds):** Activates/deactivates function or value.
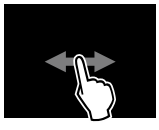	**Swipe left or right:** Navigate in the menu.
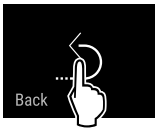	**Briefly touch the Back symbol:** Jumps back one menu level.
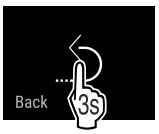	**Press and hold the Back symbol for 3 seconds:** Jumps back to the status display.
	**Arrow with clock:** It takes more than 10 seconds for the following message to appear in the display.
	**Arrow with a time indication:** It takes the specified amount of time until the following message appears in the display.
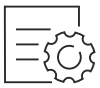	**“Open Settings menu” symbol:** Navigates to the Settings menu and opens the settings menu. If necessary: Navigate to the desired function in the Settings menu. (see 3.2.1 Opening the Settings menu)
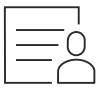	**“Open Advanced menu” symbol:** Navigates to the Advanced menu and opens the advanced menu. If necessary: Navigate to the desired function in the Advanced menu. (see 3.2.2 Opening the expanded menu)
No action for 10 seconds	If you do not perform any action on the display for 10 seconds, the display either jumps back to the higher-level menu or directly to the status display.
Open door and close it again.	If you open the door and immediately close it again, the display jumps directly back to the status display.

Note: Illustrations of the display are shown in the English version.

3.2 Menus

The appliance functions are distributed over various menus:

Menu	Description
Main menu	When you switch the appliance on, you are automatically in the main menu. From here you can navigate to the most important appliance functions, to the Settings menu and to the Advanced menu.
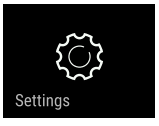 Settings menu	The Settings menu contains additional appliance functions for setting up your appliance.

Menu	Description
Advanced menu	The advanced menu contains special appliance functions for setting up your appliance. Access to the Advanced menu is protected by the numerical code **1 5 1**.

3.2.1 Opening the Settings menu

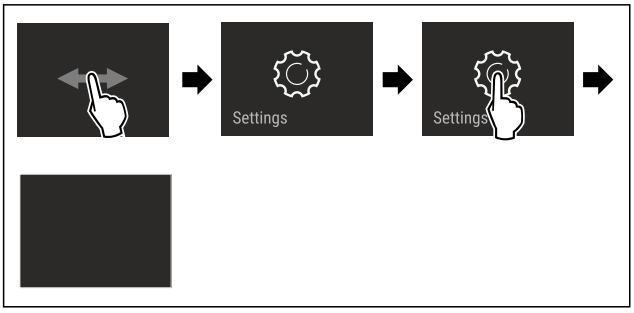

Fig. 3 Example illustration

▶ Carry out action steps according to the illustration.
▷ Settings menu is open.
▶ If necessary: Navigate to the desired function.

3.2.2 Opening the expanded menu



Fig. 4

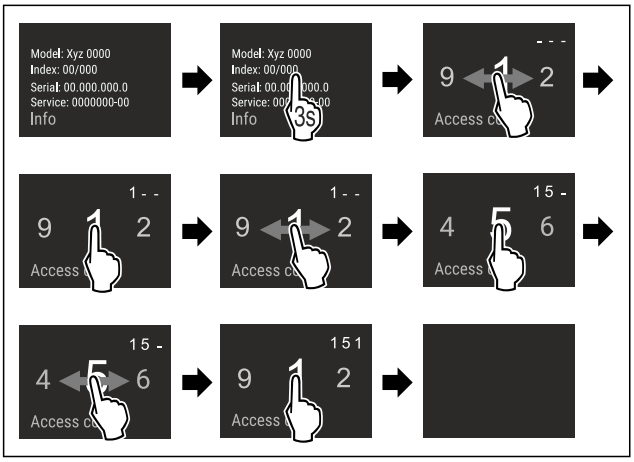

*Fig. 5 Example illustration, access with numerical code **151***

▶ Carry out action steps according to the illustration.
▷ The expanded menu is open.
▶ If necessary: Navigate to the desired function.

3.3 Sleep mode

If you do not touch the display for 1 minute, the display switches to sleep mode. In sleep mode, the display brightness is dimmed.

3.3.1 Ending sleep mode

▶ Touch the display briefly with your finger.
▷ Sleep mode is ended.

4 Putting into operation

4.1 Switching on appliance (first use)

Make sure that the following requirements are fulfilled:

❑ The appliance is properly installed and connected according to the installation instructions.
❑ All adhesive strips, adhesive and protective films and transport locks are removed from inside and on the appliance.
❑ All marketing leaflets are removed from the drawers.
❑ You are familiar with the functionality of the Touch & Swipe display. (see 3 Functionality of the Touch & Swipe display)

Switch on the appliance using the Touch & Swipe display:

▶ If the display is in sleep mode: Briefly touch the display.
▶ Carry out action steps according to the illustration.

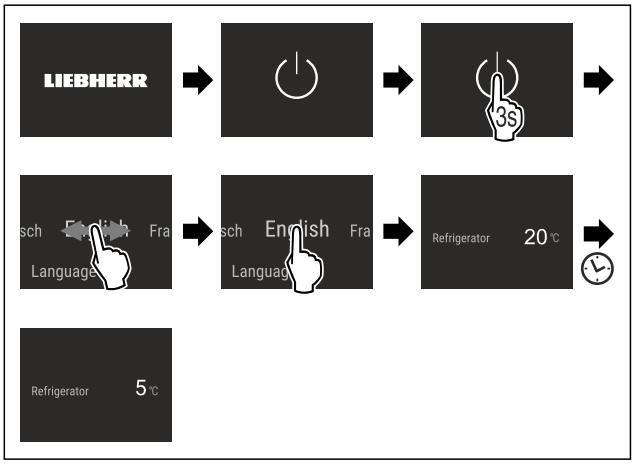

Fig. 6 Example illustration

▷ The status display appears.
▷ The appliance cools to the temperature set at the factory.
▷ The appliance starts in demo mode (status display with DEMO appears): If the appliance starts in demo mode, you can deactivate demo mode within the next 5 minutes. (see Demo mode)

More information:

- Start the SmartDevice for the first time. (see 1.3 SmartDevice) and (see WiFi)

Note
The manufacturer recommends:
▶ Stock with food: Wait for around 6 hours until the set temperature is reached.
▶ Observe the notes on storing food. (see 5.1 Information regarding storage)

Note
Accessories can be purchased from the Liebherr-Hausgeräte store at home.liebherr.com/shop/de/deu/zubehor.html.

5 Storage

5.1 Information regarding storage

WARNING
Risk of fire
▶ Do not use any electrical appliances in the food area of the appliance unless recommended by the manufacturer.

Note
The energy consumption increases and the cooling power goes down if ventilation is not sufficient.
▶ Always keep air slots clear.

Observe the following specifications for storage:

- Keep the air vents on the inside of the rear wall free.
- Keep the air vents on the fan free.
- Package or cover foods that readily take on or give off odours or taste in closed containers.
- Package raw meat or fish in clean, closed containers. This will prevent meat or fish from touching or dripping onto other food.
- Keep liquids in closed containers.
- Leave space between goods to ensure good air circulation.
- Store food according to the instructions on the packaging.
- Always observe the best-before date indicated on the packaging.

Note
Failure to follow these guidelines can lead to foodstuffs spoiling.

5.2 Fridge compartment

The air circulation in the appliance creates different temperature zones. You will find the different temperature zones in the appliance and equipment overview. (see 1.2 Overview of appliances and equipment)

5.2.1 Arranging your food properly

Note
Maximum load of a single drawer in the fridge compartment: 22 kg

Maximum load of the fridge compartment when all drawers are pulled out at the same time: 50 kg

(see 1.2 Overview of appliances and equipment)

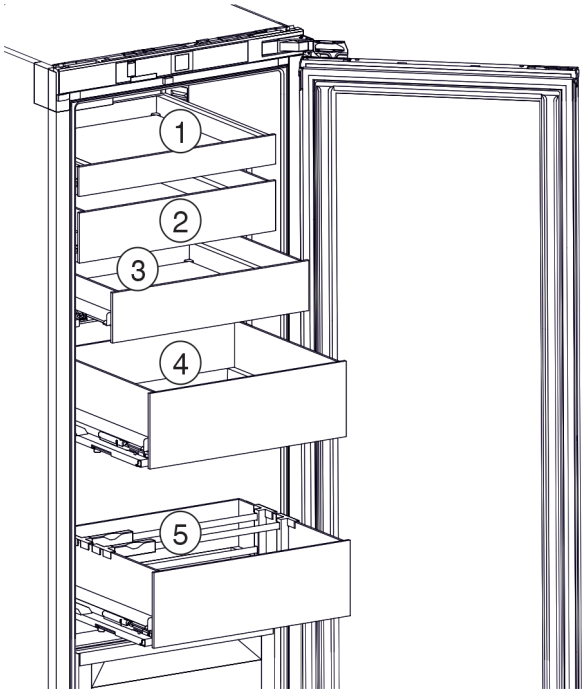

Fig. 7 Storage examples

(1) Butter, eggs
(2) Yoghurt, quark
(3) Foodstuffs in small jars or in small tins
(4) Canned food, tins
(5) Bottles, Tetra Paks

▶ Load drawers according to the size of the groceries.

5.3 BioFresh

BioFresh will extend the storage time for some fresh foods compared to traditional refrigeration.

Note
If the temperature drops below 0 °C foods may freeze.
▶ Store cold-sensitive produce such as cucumbers, aubergines, courgettes and tropical fruit in the fridge compartment.

5.3.1 Fruit & Vegetable safe

This safe creates a storage climate of close to 0 °C. The tight lid ensures constant levels of humidity. This storage climate is suitable for storing unpackaged food with high intrinsic moisture (for example, lettuce, vegetables, fruit).

The humidity in the compartment depends on the moisture content of the chilled goods placed in it, and also depends on how often the compartment is opened. You can regulate the humidity level. (see 8.4 Adjusting the moisture levels)

Arranging your food properly

▶ Store unpackaged fruit and vegetables.
If the humidity is too high:
▶ Regulate the humidity. (see 8.4 Adjusting the moisture levels)

5.3.2 Meat & Dairy safe

This safe creates a storage climate of close to 0 °C. This storage climate is suitable for more sensitive foods (e.g. dairy products, meat, fish, sausage).

Arranging your food properly

▶ Store dry or packaged food.

5.4 Storage times

Refer to the specified storage times as a guide.

In the case of foods with a minimum shelf life, the date indicated on the packaging still applies.

5.4.1 Fridge section

Always follow the best-before date stated on the packaging.

5.4.2 BioFresh

Recommended storage periods in the Meat & Dairy-Safe		
Butter	at 1 °C	up to 90 days
Hard cheese	at 1 °C	up to 110 days
Milk	at 1 °C	up to 12 days
Sausage, cold meats	at 1 °C	up to 8 days
Poultry	at 1 °C	up to 6 days
Pork	at 1 °C	up to 6 days
Beef	at 1 °C	up to 6 days
Game	at 1 °C	up to 6 days

Note

▶ Remember that high-protein foods perish quicker; shellfish and crustaceans do not last as long as fish, and fish does not last as long as meat.

Recommended storage periods in the Fruit & Vegetable-Safe		
Vegetables, salads		
Artichokes	at 1 °C	up to 14 days
Celery	at 1 °C	up to 28 days
Cauliflower	at 1 °C	up to 21 days
Broccoli	at 1 °C	up to 13 days
Chicory	at 1 °C	up to 27 days
Lettuce	at 1 °C	up to 19 days
Peas	at 1 °C	up to 14 days
Kale	at 1 °C	up to 14 days
Carrots	at 1 °C	up to 80 days
Garlic	at 1 °C	up to 160 days
Turnip	at 1 °C	up to 14 days
Lettuce	at 1 °C	up to 13 days
Herbs	at 1 °C	up to 13 days
Leeks	at 1 °C	up to 29 days
Mushrooms	at 1 °C	up to 7 days
Radishes	at 1 °C	up to 10 days
Brussels sprouts	at 1 °C	up to 20 days
Asparagus	at 1 °C	up to 18 days
Spinach	at 1 °C	up to 13 days
Savoy	at 1 °C	up to 20 days
Fruit		
Apricots	at 1 °C	up to 13 days
Apples	at 1 °C	up to 80 days

Recommended storage periods in the Fruit & Vegetable-Safe		
Pears	at 1 °C	up to 55 days
Blackberries	at 1 °C	up to 3 days
Dates	at 1 °C	up to 180 days
Strawberries	at 1 °C	up to 7 days
Figs	at 1 °C	up to 7 days
Blueberries	at 1 °C	up to 9 days
Raspberries	at 1 °C	up to 3 days
Currants	at 1 °C	up to 7 days
Sweet cherries	at 1 °C	up to 14 days
Kiwis	at 1 °C	up to 80 days
Peaches	at 1 °C	up to 13 days
Plums	at 1 °C	up to 20 days
Cranberries	at 1 °C	up to 60 days
Rhubarb	at 1 °C	up to 13 days
Gooseberries	at 1 °C	up to 13 days
Grapes	at 1 °C	up to 29 days

6 Saving energy

- Pay attention to good ventilation. Do not cover ventilation holes or grids.
- Always keep the fan air slits clear.
- Do not install the appliance in direct sunlight, next to an oven, radiator or similar.
- Energy consumption depends on the installation conditions, e.g. the ambient temperature (see 1.4 Appliance range of use) . A warmer ambient temperature can increase the energy consumption.
- Open the appliance for as short a time as possible.
- The lower the temperature is set the higher the energy consumption.
- Sort your food: home.liebherr.com/food.
- Keep all food properly packed and covered. This prevents frost from forming.
- Only take food out for as long as necessary so that it doesn't warm up too much.
- Inserting warm food: allow to cool down to room temperature first.
- For longer periods of absence, use HolidayMode (see HolidayMode) .

7 Controls

7.1 Controls and displays

7.1.1 Status display



Fig. 8

(1) Temperature display of the fridge section

(2) Temperature display BioFresh

The Status display shows the set temperatures and is the home display. From there, you can navigate to the options and settings.

7.1.2 Display symbols

Display symbols provide information on the current appliance status:

Symbol	Appliance status
	**Standby** The appliance or temperature zone is switched off.
 	**Flashing number** Appliance is working. Temperature flashes until the set temperature is reached.
 	**Flashing symbol** Appliance is working. Setting is made.

7.2 Appliance functions

7.2.1 Notes on the appliance functions

The appliance functions are set at the factory so that your appliance is fully functional.

Before you alter, activate or deactivate the device functions, make sure that the following requirements are met:

- ❑ You have read and understood the descriptions of how the display works.
- ❑ You have familiarised yourself with the operating and display elements of your appliance.

Turn off appliance

This setting turns off the whole appliance.

Switching off the entire appliance



Fig. 9

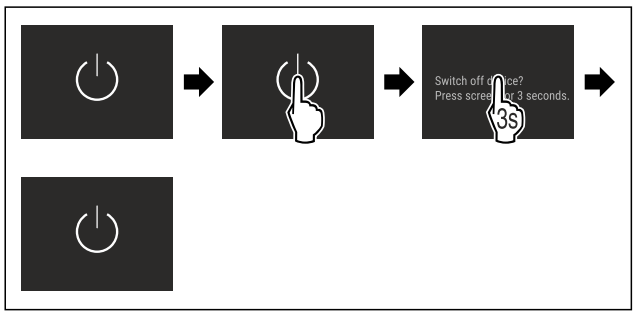

Fig. 10

▷ Off: Display goes black.

WiFi

Use this function to connect your appliance to WiFi. You can then operate it via the SmartDevice app on a mobile device. You can also use this function to disconnect or reset the WiFi connection.

More information on the SmartDevice: (see 1.3 SmartDevice)

Note
The SmartDevice function is not available in the following countries: Russia, Belarus, Kazakhstan.

Establishing the WiFi connection for the first time

Make sure that the following requirements are fulfilled:

- ❑ You have installed the SmartDevice app (see apps.home.liebherr.com).
- ❑ Registration in the SmartDevice app is completed.



Fig. 11

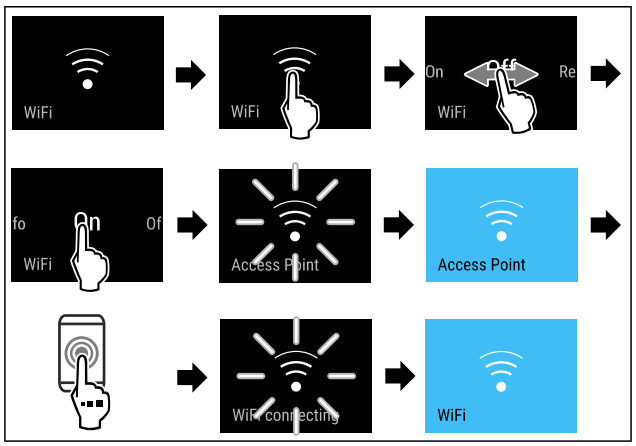

Fig. 12

▶ Carry out action steps according to the illustration.

▷ Connection is established.

Disconnecting from the WiFi



Fig. 13

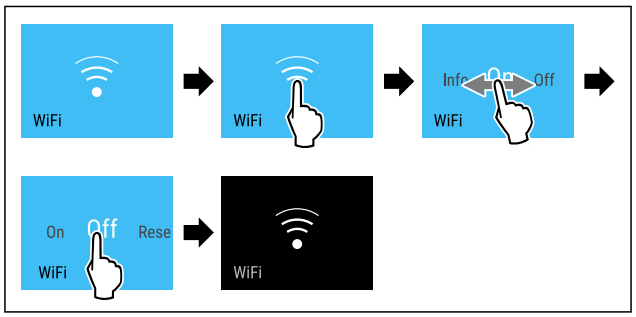

Fig. 14

▶ Carry out action steps according to the illustration.

▷ There is no connection.

Resetting the WiFi connection



Fig. 15

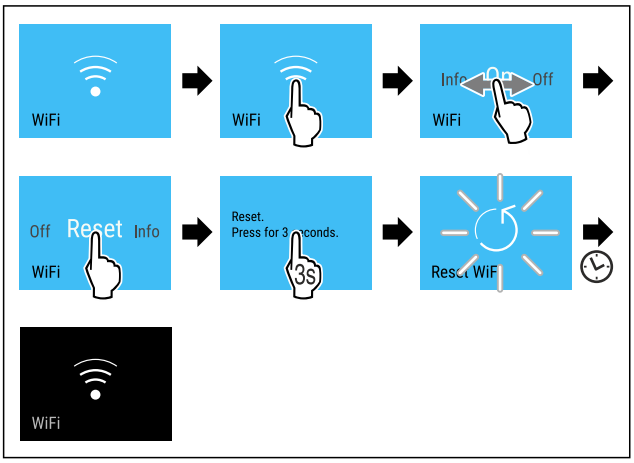

Fig. 16

▶ Carry out action steps according to the illustration.
▷ WiFi connection and other WiFi settings are reset to factory settings.

Showing information about the WiFi connection



Fig. 17

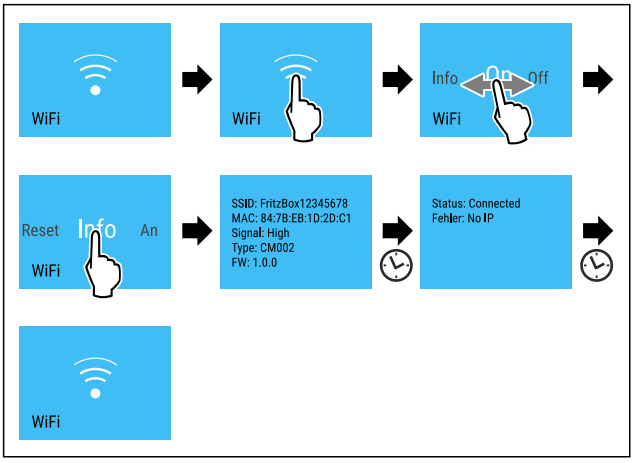

Fig. 18

▶ Carry out action steps according to the illustration.

5 °C Temperature

Use this function to set the temperature.

The temperature depends on the following factors:

- How often the door is opened
- How long the door is open for
- The room temperature of the installation site
- The type, temperature and amount of food

Temperature zone	Recommended setting
5 °C Fridge compartment	5 °C
0 °C BioFresh	(see Setting the temperature in the BioFresh)

Setting the temperature in the fridge compartment

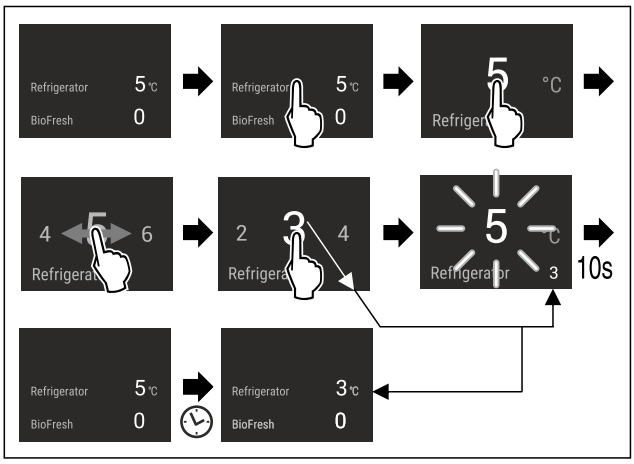

Fig. 19

▶ Carry out action steps according to the illustration.
▷ Temperature is set.

Setting the temperature in the BioFresh

You can set the temperature using the **BioFresh B-Value** in the customer menu.

°C/°F Temperature unit

Use this function to set the temperature unit. You can set degrees Celsius or degrees Fahrenheit as the temperature unit.

Setting the temperature unit



Fig. 20

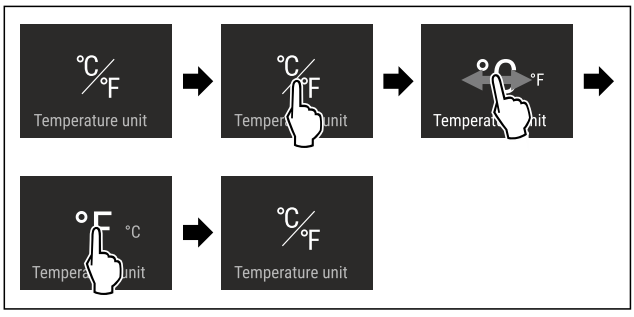

Fig. 21 Example illustration: Switch from degrees Celsius to degrees Fahrenheit.

▶ Carry out action steps according to the illustration.
▷ The temperature unit is set.

B5 BioFresh B-Value

Use this function to set the BioFresh B-Value. With the BioFresh B-Value, you can set BioFresh slightly warmer or colder if necessary due to higher or lower ambient temperatures. The BioFresh B-Value is pre-set to value B5 as delivered. If you change the B-Value, refer to the following table:

Value	Description
B1	Lowest temperature
B1-B4	The temperature can drop below 0 °C which means foods can easily freeze.
B5	Pre-set temperature
B9	Highest temperature

Setting the BioFresh B-Value



Fig. 22

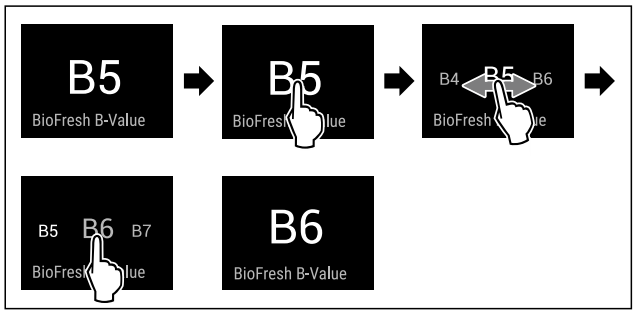

Fig. 23 Example illustration: Switch from B5 to B6.

▶ Carry out action steps according to the illustration.
▷ The BioFresh B-Value is set.
▷ Status display shows target temperature.

D1 D-Value

The D-Value is pre-set for your appliance and is not permitted to be changed.

SuperCool

This function selects the lowest cooling temperature. This gives you colder storage temperatures.

This function is relevant to the fridge section *Fig. 1 (A)*

Use:

- Cool large amounts of food quickly.

Activating/deactivating the function

▶ Using the fridge section: activate the function when you add the goods.
▶ Activating/deactivating.

-or-

▶ Activate/deactivate using the SmartDevice app.

The function automatically turns off. The appliance goes back to normal mode. The temperature adjusts itself to the set level.

PartyMode

You can use this function to activate or deactivate PartyMode. PartyMode activates various functions that are useful for a party.

PartyMode activates the following functions:

- SuperCool (see SuperCool)

You can adjust all listed functions individually and flexibly. When you deactivate PartyMode, all changes are discarded.

If the function is active, the device operates at higher power. As a result, the device's operating noise may be temporarily louder and energy consumption will increase.

Activating PartyMode



Fig. 24

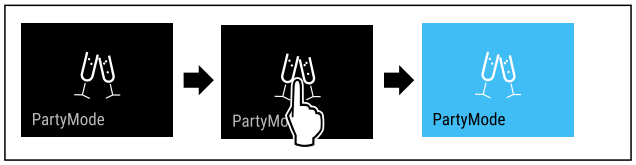

Fig. 25

▶ Carry out action steps according to the illustration.
▷ PartyMode and the associated functions are activated.
▷ The temperature display turns blue.
▷ The current temperature flashes until the target temperature is reached.

Deactivating PartyMode

The PartyMode is automatically deactivated after 24 seconds. However, you can also deactivate PartyMode manually at any time:



Fig. 26

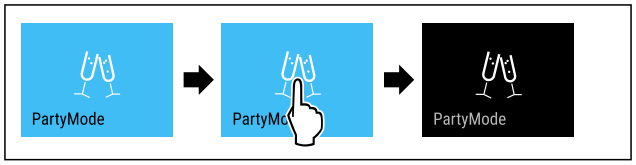

Fig. 27

▶ Carry out action steps according to the illustration.
▷ PartyMode is deactivated.
▷ The appliance cools to the temperature set previously: The current temperature flashes until the target temperature is reached.

HolidayMode

This function minimises the energy consumption during an extended absence. The temperature of the refrigerator compartment is set to 15 °C and this is displayed on the status screen when the temperature has been reached.

Use:
- Save energy if you plan to be away for a while.
- Avoid coming home to bad smells and mould.

Activating/deactivating the function

▶ Empty everything from the fridge section.
▶ Activating/deactivating .
▷ On: Fridge temperature is raised.
▷ Off: the previously set temperature is restored.

SabbathMode

You can use this function to activate or deactivate SabbathMode. If you activate this function, some electronic functions are switched off. As a result, your device meets the religious requirements for Jewish holidays such as Sabbath and complies with STAR-K Kosher certification.

Device status when SabbathMode is active
The status display shows SabbathMode permanently.
All functions on the display are locked except for the **Deactivate SabbathMode function**.
Active functions remain active.
The display remains bright when you close the door.
The interior lighting is deactivated.
Reminders are not implemented. The set time interval stops.
Reminders and warnings are not displayed.
There is no door alarm.
There is no temperature alarm.
The defrosting cycle operates only for the specified time, without considering the device consumption.
After a power failure, the device returns to SabbathMode.

Device status

Note
This appliance has certification from the “Institute for Science and Halacha”. (www.machonhalacha.co.il)

You can find a list of STAR-K-certified appliances at www.star-k.org/appliances.

Activating SabbathMode

WARNING
Danger of food poisoning from spoiled food!
If you have SabbathMode activated and a power failure occurs, no message appears in the status display about the power failure. Once the power is restored, the appliance continues to operate in SabbathMode. The power failure may mean that food spoils and the consumption of this food could lead to food poisoning.
After a power failure:
▶ Do not consume food that was frozen and has thawed out.



Fig. 28

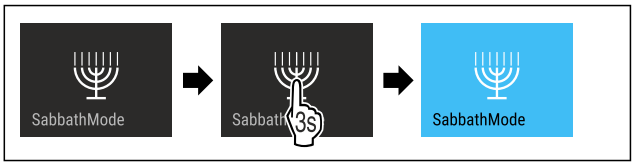

Fig. 29

▶ Carry out action steps according to the illustration.
▷ SabbathMode is activated.
▷ The status display shows SabbathMode permanently.

Deactivating SabbathMode

The SabbathMode is automatically deactivated after 80 hours. However, you can also deactivate SabbathMode manually at any time:

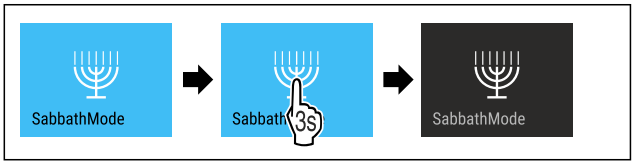

Fig. 30

▶ Carry out action steps according to the illustration.
▷ SabbathMode is deactivated.

EnergySaver

You can use this function to activate or deactivate Energy saving mode. If energy saving mode is activated, the energy consumption decreases and the temperature in the device increases. The food remains fresh, but the shelf life is shortened.

Temperature zone	Recommended setting (see Temperature)	Temperature with active EnergySaver
5 °C Fridge section	5 °C	7 °C

Temperatures

Activating EnergySaver



Fig. 31

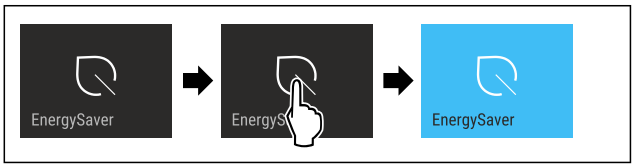

Fig. 32

▶ Carry out action steps according to the illustration.
▷ Energy saving mode is activated.

Deactivating EnergySaver

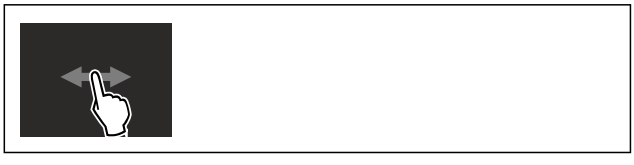

Fig. 33

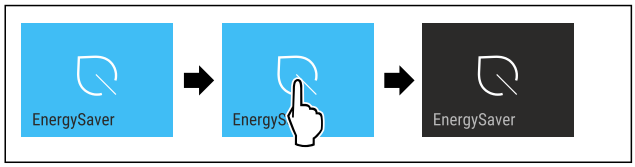

Fig. 34

▶ Carry out action steps according to the illustration.
▷ Energy saving mode is deactivated.

CleaningMode

You can use this function to activate or deactivate CleaningMode. CleaningMode enables the appliance to be cleaned conveniently.

This setting applies to the fridge section.

Application:

- Clean the fridge section. (see 9.4 Cleaning the appliance)

Device status when CleaningMode is active
The status display shows CleaningMode permanently.
The fridge section is switched off.
Interior lighting is activated.
The reminders and warnings are not displayed. No signal tone sounds.

Device status

Activating CleaningMode



Fig. 35

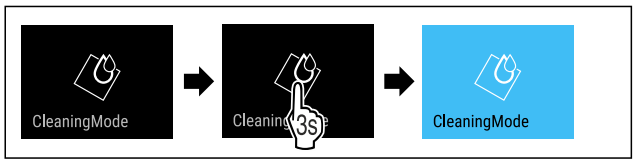

Fig. 36

▶ Carry out action steps according to the illustration.
▷ CleaningMode is activated.
▷ The status display shows CleaningMode permanently.

Deactivating CleaningMode

CleaningMode is deactivated automatically after 60 minutes. However, you can also deactivate CleaningMode manually at any time:

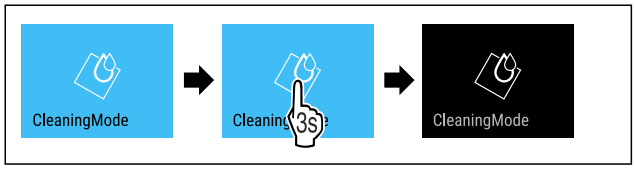

Fig. 37

▶ Carry out action steps according to the illustration.
▷ CleaningMode is deactivated.
▷ The appliance cools to the temperature set previously.

Display brightness

Use this function to set the display brightness in stages.

You can select the following brightness levels:

- 40 %
- 60 %
- 80 %
- 100 % (pre-setting)

Setting the display brightness



Fig. 38

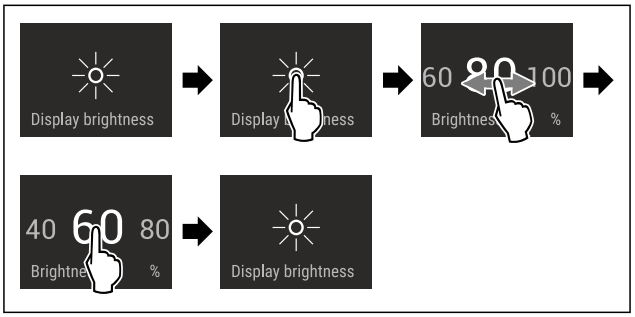

Fig. 39 Example illustration: Switch from 80 % to 60 %.

▶ Carry out action steps according to the illustration.
▷ The display brightness is set.

Door alarm

Use this function to activate or deactivate the door alarm. The door alarm sounds if the door is open for too long. The door alarm is activated on delivery. You can set how long the door may be open before the door alarm sounds.

The following values can be set:

- 1 minute
- 2 minutes
- 3 minutes
- Off

Setting the door alarm



Fig. 40

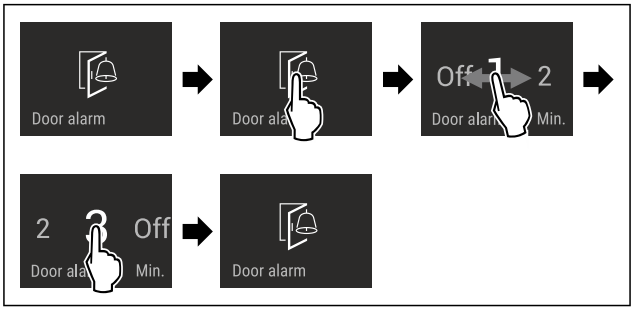

Fig. 41 Example illustration: Change door alarm from 1 minute to 3 minutes.

▶ Carry out action steps according to the illustration.
▷ The door alarm is set.

* Depending on model and options

Deactivating the door alarm



Fig. 43

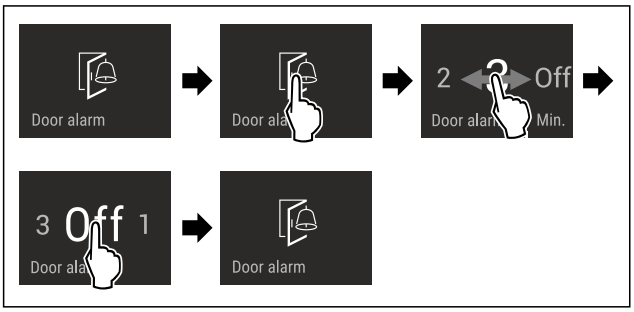

Fig. 44

▶ Carry out action steps according to the illustration.
▷ The door alarm is deactivated.

Input lock

You can use this function to activate or deactivate the input lock. The input lock prevents the appliance being operated accidentally, e.g. by children.

Application:

- Avoid unintentional modification of functions.
- Avoid unintentional switching off of the device.
- Avoid unintentional temperature setting.

Activating the input lock

If you activate the input lock, you can continue to navigate in the menus but you cannot select or change other functions.



Fig. 45

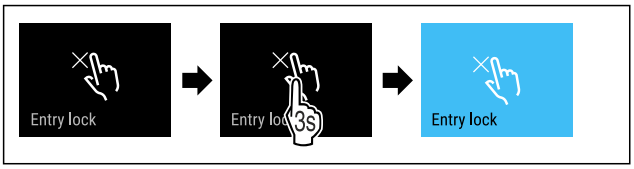

Fig. 46

▶ Carry out action steps according to the illustration.
▷ Input lock is activated.

Deactivating the input lock



Fig. 47

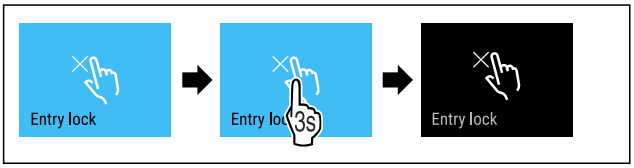

Fig. 48

▶ Carry out action steps according to the illustration.
▷ Input lock is deactivated.

Language

Use this function to set the display language.

You can select the following languages:

- Deutsch
- English
- Français
- Español
- Italiano
- Nederlands
- Čeština
- Polski
- Português
- Русский
- 温度单位

Setting the language



Fig. 49

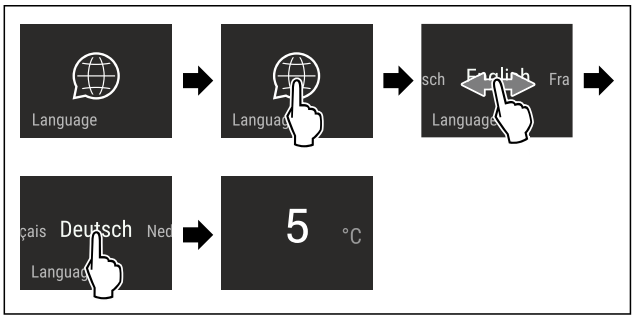

Fig. 50 Example illustration depending on the language and temperature

▶ Carry out action steps according to the illustration.
▷ The language is set.
▷ The display returns to the status display.

Device information

Use this function to indicate the model name, index, serial number and service number of your device. You will need the device information when you contact customer service. (see 10.4 Customer Service)

This function also opens the Advanced menu. (see 3 Functionality of the Touch & Swipe display)

Indicating the device information



Fig. 51



Fig. 52

▶ Carry out action steps according to the illustration.
▷ Display indicates device information.

Software

Use this function to indicate the software version of your device.

Indicating the software version



Fig. 53



Fig. 54

▶ Carry out action steps according to the illustration.
▷ Display indicates software version.

Reminder

Reminders are given out acoustically by a beep and visually by a symbol in the display. The signal gets louder until the alert stops.

Replace FreshAir active carbon filter

This message appears when the air filter needs replacing.
▶ Change the air filter every six months.
▶ Confirm the message with OK.
▷ The service interval resets.
▷ The air filter guarantees the air quality in the fridge.

Activating the setting

▶ Activating/deactivating .

Demo mode

Demo mode is a special feature for dealers who want to demonstrate appliance features. If you activate demo mode, all refrigeration functions are deactivated.

If you switch on your appliance and “Demo” appears in the status display, then demo mode is already activated.

If you activate and then deactivate demo mode, the appliance will be reset to factory defaults. (see Resetting to factory settings)

Activating demo mode



Fig. 55

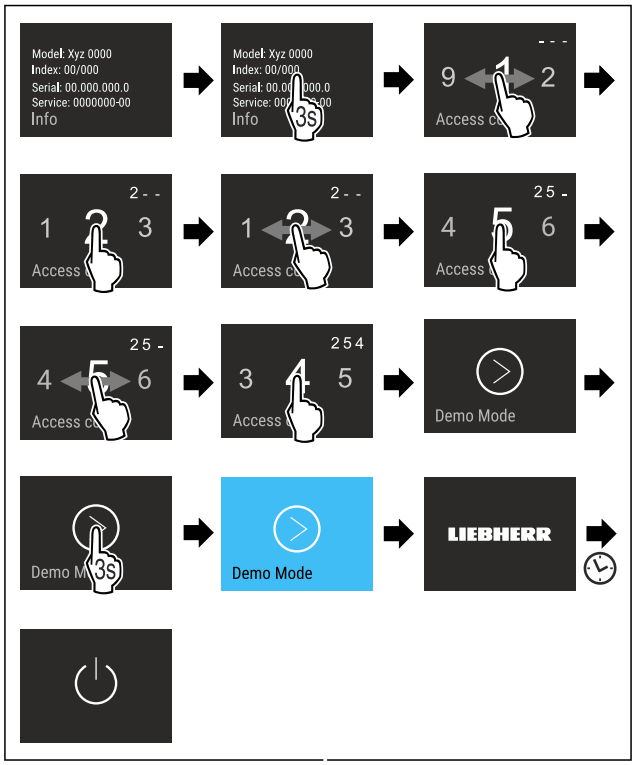

Fig. 56

▶ Carry out action steps according to the illustration.
▷ Demo mode is activated.
▷ Appliance is switched off.
▶ Switch on the appliance. (see 4.1 Switching on appliance (first use))
▷ “DEMO” appears in the status display.

Deactivating demo mode



Fig. 57

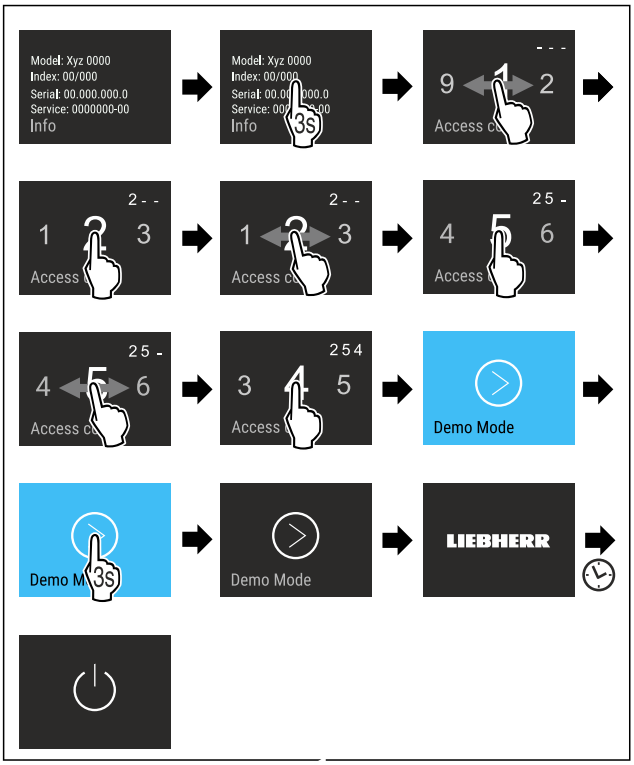

Fig. 58

▶ Carry out action steps according to the illustration.
▷ Demo mode is deactivated.
▷ Appliance is switched off.
▶ Switch on the appliance. (see 4.1 Switching on appliance (first use))
▷ Appliance is reset to factory settings.

Resetting to factory settings

Use this function to reset all settings to factory defaults. All settings you have made so far are reset to their original settings.

Performing a reset



Fig. 59

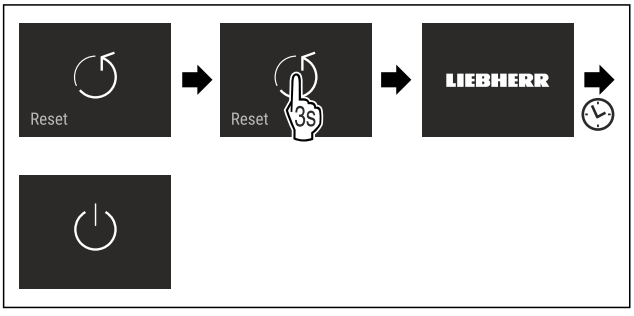

Fig. 60

▶ Carry out action steps according to the illustration.
▷ Device is reset.
▷ Device is switched off.
▶ Restart the device. (see 4.1 Switching on appliance (first use))

7.3 Fault messages

Fault messages appear in the display. There are two categories of fault message:

Category	Meaning
Message	Reminder of general procedures. You can carry out these procedures to eliminate the message.
Warning	Appears when there are malfunctions. A signal sounds in addition to the display. The signal becomes louder until you acknowledge by tapping the display. You can eliminate simple defects yourself. For more serious defects, you must contact customer service.

7.3.1 Warnings

Close the door

This message appears if the door is open for too long.

You can set how long it takes for this message to appear .

▶ Stop alarm: Confirm the message.

-or-

▶ Close the door.

Error

This message appears if there is a fault with the appliance. An appliance component indicates a fault.

▶ Open the door.
▶ Note down the fault code.
▶ Confirm the message.
▷ The signal tone stops.
▷ The status display appears.
▶ Close the door.
▶ Contact customer service. (see 10.4 Customer Service)

8 Features

8.1 Adjustable bottle shelf

8.1.1 Using the bottle shelf

In the bottom of the fridge section you can either use the variable bottle shelf or the glass panel.

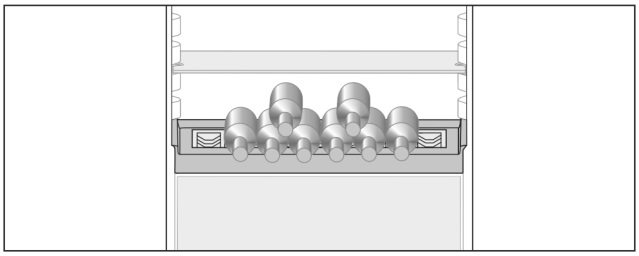

Fig. 61

▶ Remove the glass panel and store in a safe place.
▶ Lay bottles with their base towards the rear wall.

Note

If the bottles are protruding over the front of the bottle shelf:

▶ Move the lower door rack up a place.

8.1.2 Removing the bottle shelf

You can remove the bottle shelf for cleaning.

▶ Remove the glass panel above the bottle shelf.

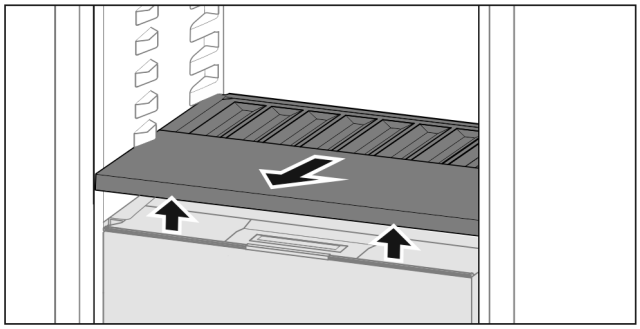

Fig. 62

▶ Lift the bottle shelf at the front and pull out.

Note
Liebherr recommends the following:

Do not place any goods on the drawer cover below.

8.1.3 Inserting the bottle shelf

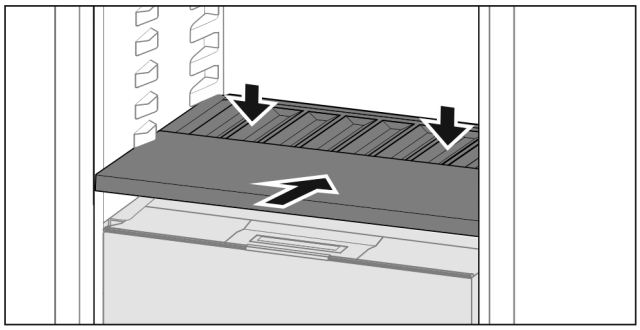

Fig. 63

▶ Slide in the bottle shelf until it engages and push down.
▷ The lugs at the back of the bottle shelf are connected automatically.
▷ LED comes on.

8.2 Drawers

You can remove the drawers for cleaning.

The way to remove/insert the drawers varies depending on the pull-out system. Your appliance can contain various pull-out systems.

Note
The energy consumption increases and the cooling power goes down if ventilation is not sufficient.
▶ Always leave the fan air vents clear on the back wall!

8.2.1 Drawer on telescopic rails

The drawer runs on extendible rails (telescopic rails). There are fully extendible telescopic rails and telescopic rails with partial pull-out. Drawers which are fully extendible can be pulled out fully from the appliance. Drawers with partial pull-out cannot be removed fully from the appliance. The system in your appliance depends on the type of appliance.

Fully extendible*

If you have fully extendible rails, there is a clamp located at the back on the left and right of the rail.

Removing drawer

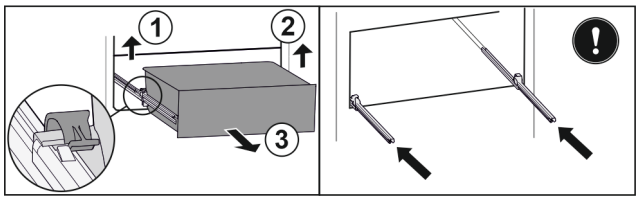

Fig. 64

▶ Pull out drawer as far as it will go.
▶ Lift left clamp and simultaneously pull drawer forwards on the left. *Fig. 64 (1)*
▶ Lift right clamp and simultaneously pull drawer forwards on the right. *Fig. 64 (2)*
▶ Remove drawer to the front. *Fig. 64 (3)*
▶ Slide rails in.

Inserting drawer

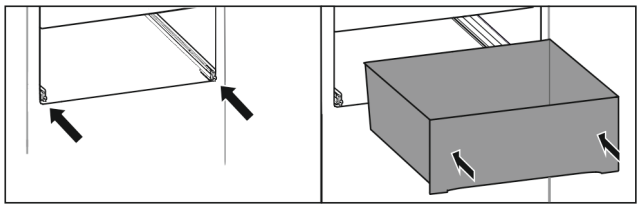

Fig. 65

▶ Slide rails in.
▶ Place drawer on rails.
▶ Slide in drawer to the back.
▷ Drawer latches in audibly at the back.

Fully extendible glass drawer*

Removing drawer

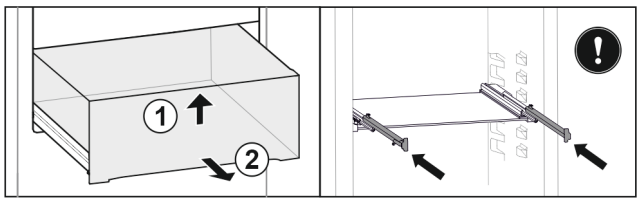

Fig. 66

▶ Pull out drawer as far as it will go.
▶ Lift up drawer at the front. *Fig. 66 (1)*
▶ Remove drawer to the front. *Fig. 66 (2)*
▶ Slide rails in.

Inserting drawer

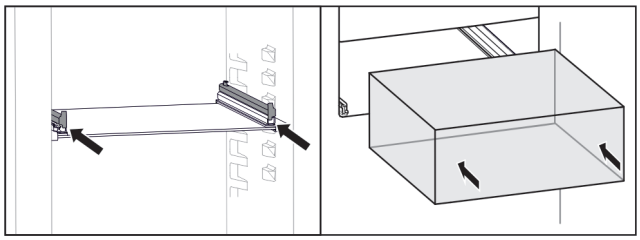

Fig. 67

▶ Slide rails in.
▶ Place drawer on rails.
▶ Slide in drawer to the back.
▷ Drawer latches in.

8.3 Fruit & Vegetable safe cover

You can remove the compartment cover for cleaning.

* Depending on model and options

8.3.1 Removing the compartment cover

Ensure that the following conditions are met:

❑ Bottle shelf is removed (see 8.1 Adjustable bottle shelf) .

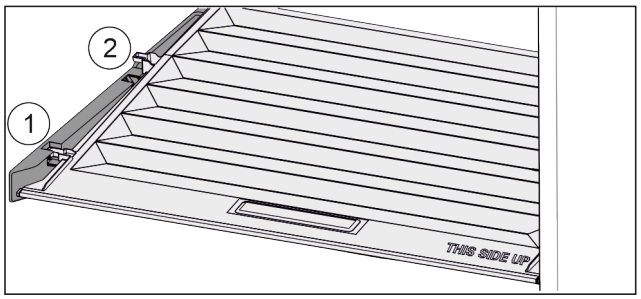

Fig. 68

When the drawers are removed:

▶ Pull the lid up at the front to the opening in the retaining parts *Fig. 68 (1)*.

▶ Lift from the back and pull it up and out *Fig. 68 (2)*.

8.3.2 Inserting the compartment cover

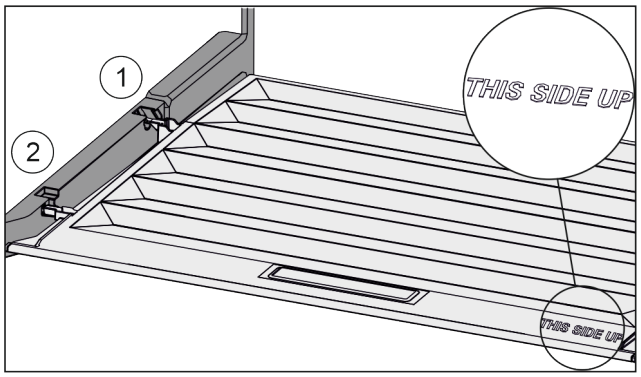

Fig. 69

If the text THIS SIDE UP points upwards:

▶ Insert the lip of the cover over the opening of the rear bracket *Fig. 69 (1)* and click into place *Fig. 69 (2)*.

▶ Position the cover where you want it (see 8.4 Adjusting the moisture levels) .

8.4 Adjusting the moisture levels

You can adjust the moisture in the drawer yourself by adjusting the compartment cover.

The compartment lid is attached to the drawer and can be hidden by a shelf or additional drawers.

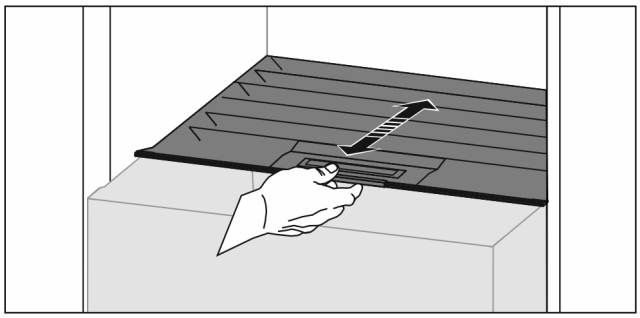

Fig. 70

Low air humidity

▶ Open the drawer.

▶ Slide the compartment cover forwards.

▷ With the drawer closed: Gap between the cover and the compartment.

▷ The air moisture in the Safe decreases.

High air moisture

▶ Open the drawer.

▶ Slide the cover back.

▷ With the drawer closed: The cover seals the compartment.

▷ The air moisture in the Safe increases.
If there is too much moisture in the compartment:

▶ Choose the setting “low air moisture”.

-or-

▶ Remove any excess moisture with a cloth.

Note

You can apply the “low air moisture” setting to the Fruit & Vegetable-Safe and the Meat & Dairy-Safe.

▶ Set the “low air moisture” option.

8.5 Glass shelves

You can remove the glass shelves under the drawers for cleaning.

8.5.1 Removing / inserting the glass shelf

Make sure that the following requirements are fulfilled:

❑ Glass shelf under the drawer: The drawer has been removed. (see 8.2 Drawers)

Removing glass shelf

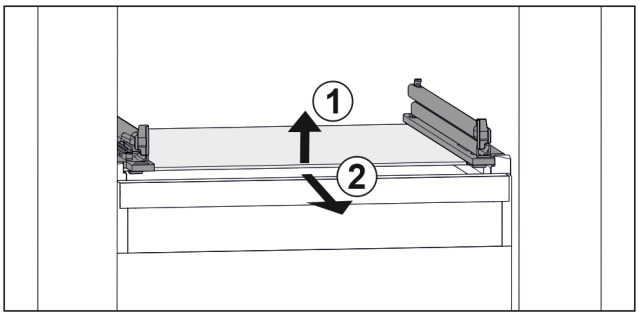

Fig. 71 Example illustration of glass shelf

▶ Lift glass shelf at the front. *Fig. 71 (1)*

▶ Take out glass shelf to the front. *Fig. 71 (2)*

Inserting glass shelf

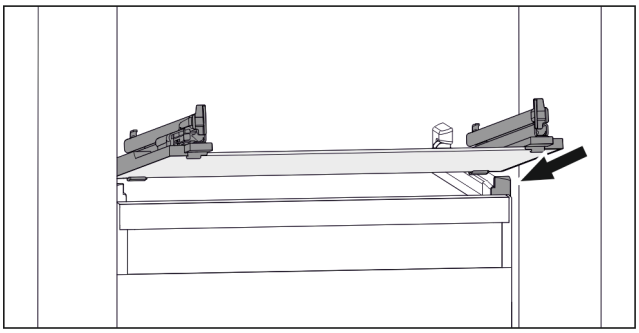

Fig. 72 Example illustration of glass shelf

▶ Position glass shelf at an angle behind the stoppers. (see Fig. 72)

▶ Lower glass shelf.

▶ Slide in glass shelf to the back.

8.6 Butter dish

8.6.1 Opening/closing the butter dish

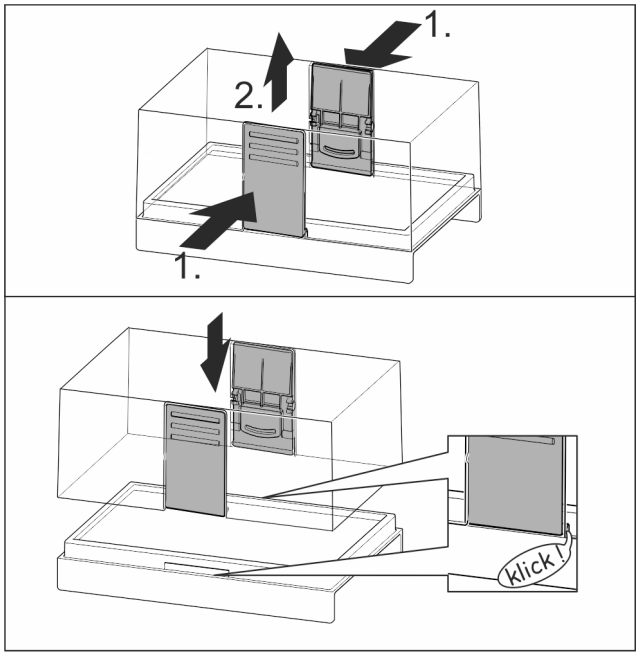

Fig. 73

8.6.2 Dismantling the butter dish

You can take the butter dish apart for cleaning.

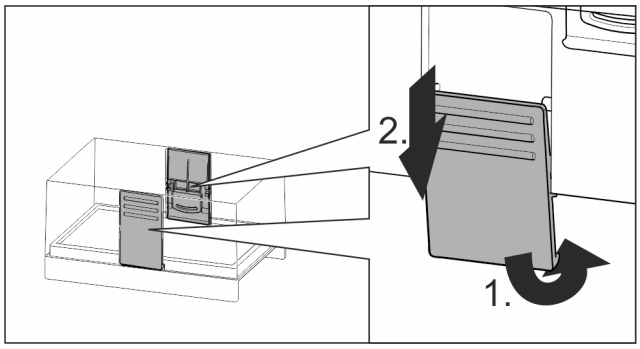

Fig. 74

▶ Disassembling the butter dish.

8.7 Egg rack

You can pull out and turn the egg rack. You can use both sides of the egg rack so you can label specifics like the purchase date.

8.7.1 Using the egg rack

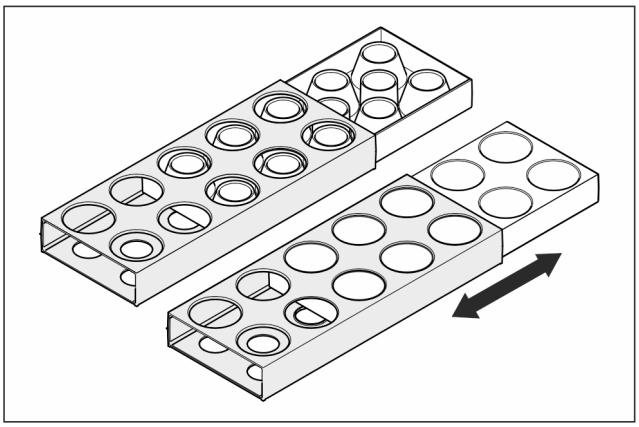

Fig. 75

▶ Top layer: for storing hen eggs.
▶ Bottom layer: for storing quail eggs.

8.8 FlexSystem

8.8.1 Using the FlexSystem

The FlexSystem helps you store and organise your food in a clear and flexible way. It lets you clearly divide your food into fruit, vegetables or by use-by dates, for example.

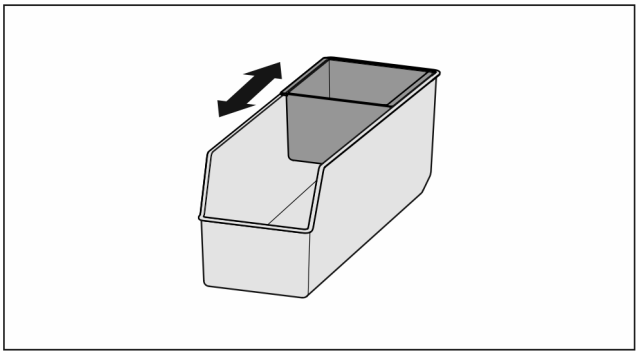

Fig. 76

▶ Move the inner shell.

8.8.2 Removing the FlexSystem

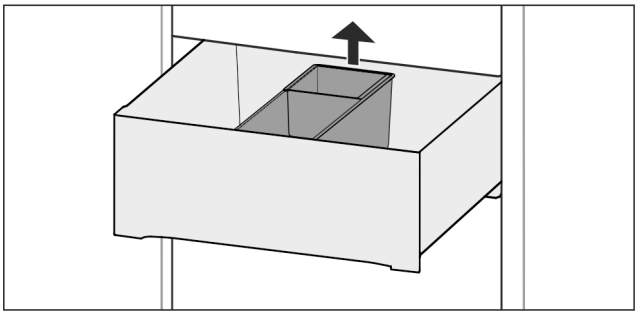

Fig. 77

▶ Lift the FlexSystem from the back.
▶ Pull up and out.

8.8.3 Inserting the FlexSystem

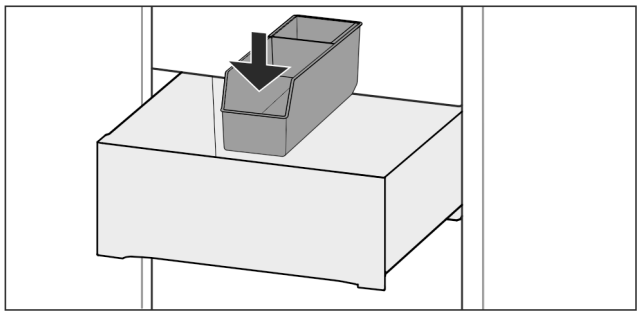

Fig. 78

▶ Insert the FlexSystem front-first.
▶ Lower the rear part.

8.8.4 Disassembling the FlexSystem

You can take the FlexSystem apart for cleaning.

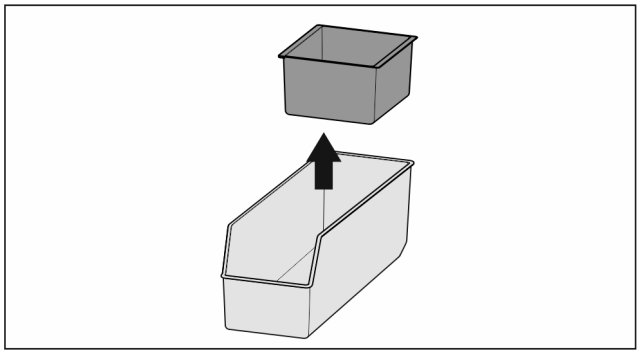

Fig. 79

▶ Disassembling the FlexSystem

9 Maintenance

9.1 FreshAir carbon filter

The FreshAir carbon filter is in the compartment above the fan.

It guarantees the best air quality.

❑ Replace the carbon filter every 6 months.
When the reminder is set, a message on the display prompts you to change it.
❑ The carbon filter can be disposed of with the regular household waste.

Note
FreshAir activated charcoal filters can be purchased from the Liebherr-Hausgeräte store at home.liebherr.com/shop/de/deu/zubehor.html.

9.1.1 Removing the FreshAir carbon filter

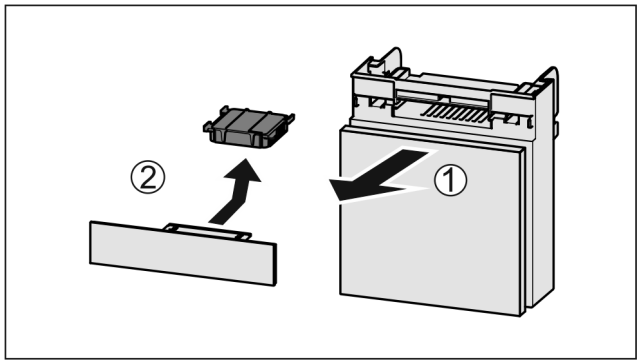

Fig. 80

▶ Pull out the compartment *Fig. 80 (1)*.
▶ Remove the carbon filter *Fig. 80 (2)*.

9.1.2 Inserting the FreshAir carbon filter

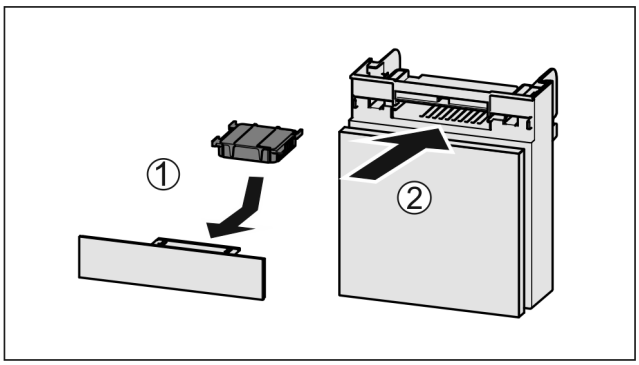

Fig. 81

▶ Insert the carbon filter as shown in the diagram *Fig. 81 (1)*.
▷ The carbon filter clicks into place.
If the carbon filter is pointing downwards:
▶ Push the compartment in *Fig. 81 (2)*.
▷ The carbon filter is now ready for use.

9.2 Disassembling / assembling pull-out systems

9.2.1 Notes on disassembly

You can disassemble some of the pull-out systems for cleaning. Your appliance can contain a variety of pull-out systems.

The following pull-out systems can be disassembled or cannot be disassembled:

Pull-out system	can be disassembled / cannot be disassembled
Fully extendible*	cannot be disassembled*
Fully extendible glass drawer*	can be disassembled (see Fully extendible glass drawer*) *

9.2.2 Drawer on telescopic rails

Fully extendible glass drawer*

Disassembling pull-out system

Make sure the following prerequisites are met:

❑ Drawer has been removed. (see Fully extendible glass drawer*)
❑ Glass shelf has been removed. (see 8.5 Glass shelves)

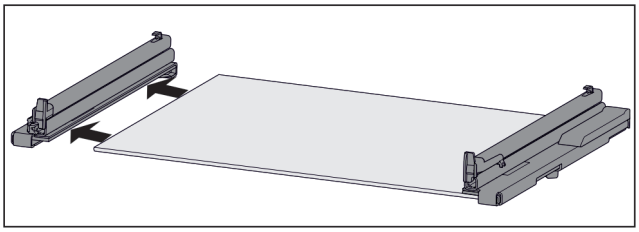

Fig. 82 Glass shelf with rails

▶ Remove rail from glass shelf sideways.

Installing pull-out system

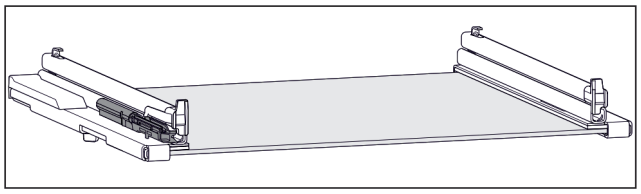

Fig. 83 Damping mechanism

The damping mechanism is attached to the left rail. (see Fig. 83) There is no damping mechanism attached to the right rail.

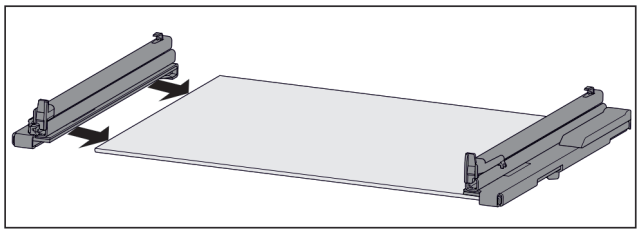

Fig. 84 Glass shelf with rails

Install rail **with** damping mechanism:

▶ Push rail as far as it will go onto the **left** side of the glass shelf.

Install rail **without** damping mechanism:

▶ Push rail as far as it will go onto the **right** side of the glass shelf.

9.3 Defrosting the appliance

WARNING
Improper defrosting of the appliance!
Injuries and damage.

▶ Do not use mechanical equipment or other methods to speed up the defrosting process other than those recommended by the manufacturer.
▶ Do not use electrical heating or steam-cleaning appliances, naked flames or defroster sprays to defrost.
▶ Do not use sharp objects to remove ice.

Defrosting is performed automatically. The water from the thawing process drains through the outlet and evaporates.

▶ Clean the drain opening regularly (see 9.4 Cleaning the appliance) .

9.4 Cleaning the appliance

9.4.1 Ready

WARNING
Danger of electric shock!

▶ Remove the refrigerator connector or interrupt the power supply.

WARNING
Risk of fire

▶ Do not damage the refrigeration circuit.

▶ Empty the appliance.
▶ Remove mains connector.

-or-

▶ Activate CleaningMode. (see CleaningMode)

9.4.2 Cleaning the interior

NOTICE
Improper cleaning!
Damage to the appliance.

▶ Only use soft cleaning cloths and ph-neutral all-purpose cleaners.
▶ Do not uses abrasive sponges or steel wool which may cause scratches.
▶ Do not use any sharp or abrasive cleaning agents, nor any that contain sand, chloride or acid.

▶ Plastic surfaces: clean by hand with a soft clean cloth, lukewarm water and a little detergent.
▶ Metal surfaces: clean by hand with a soft clean cloth, lukewarm water and a little detergent.
▶ Drain hole: remove deposits using a thin item (for example a cotton bud).

9.4.3 Clean the components

NOTICE
Improper cleaning!
Damage to the appliance.

▶ Only use soft cleaning cloths and ph-neutral all-purpose cleaners.
▶ Do not uses abrasive sponges or steel wool which may cause scratches.
▶ Do not use any sharp or abrasive cleaning agents, nor any that contain sand, chloride or acid.

Clean with a soft, clean cloth, lukewarm water and some detergent:

- Fruit & Vegetable safe cover
- Drawer
- Adjustable bottle shelf
- FlexSystem

Clean with a damp cloth:

- Retractable rails
  Please note: The grease in the tracks is used for lubrication and must not be removed!

Wash in the dishwasher up to 60 °C:

- Shelf
- Dividing shelf
- Holder of the dividing shelf
- Egg rack
- Butter dish

▶ To disassemble components: see the relevant section.
▶ Clean the components.

9.4.4 After cleaning

▶ Wipe the appliance and the components dry.
▶ Connect and switch on the appliance.
The temperature is cold enough:
▶ Place the food inside.
▶ Repeat cleaning regularly.

10 Customer help

10.1 Technical specifications

Temperature range	
Cooling	3 °C to 9 °C
BioFresh	0 °C to 3 °C

Maximum component capacity			
Features	Appliance width 550 mm (see installation instructions, appliance dimensions)	Appliance width 600 mm (see installation instructions, appliance dimensions)	Appliance width 700 mm (see installation instructions, appliance dimensions)
Glass drawer, height 59 mm	15 kg	--	--
Glass drawer, height 100 mm	15 kg	--	--
Glass drawer, height 150 mm	20 kg	--	--

Lighting	
Class[1]	Light source
This product contains one or more energy efficiency class G light sources.	LED

[1] The appliance may contain light sources with different energy efficiency classes. The lowest energy efficiency class is indicated.

For appliances with a WiFi connection:

Frequency specification	
Frequency band	2.4 GHz
Maximum radiated power	< 100 mW
Purpose of the wireless equipment	Integration in the local WiFi network for data communication

10.2 Operating noises

The appliance makes different noises when it is on.

- At **higher temperatures** the appliance uses less energy but works for longer. It is **quieter**.
- At **lower temperatures** the food is cooled faster. It is **louder**.

  Examples:
  - Functions on (see 7.2 Appliance functions)
  - Fan running
  - Food recently added
  - High ambient temperature
  - Door open for a while

Noise	Possible cause	Type of noise
Bubbling and splashing	Coolant flowing into the cooling circuit.	Normal operating noise
Hissing	Coolant sprays into the cooling circuit.	Normal operating noise
Humming	The appliance is cooling. The volume depends on the cooling output.	Normal operating noise
Suction noises	Soft-closing door is being opened and closed.	Normal operating noise
Humming and rustling	The fan is running.	Normal operating noise
Clicking	Components are switched on and off.	Normal switching noise
Rattling or humming	Valves or flaps are working.	Normal switching noise

Noise	Possible cause	Type of noise	Lifting
Vibration	Improper installation	Defective noise	Check the installation. Level the appliance.
Rattling	Components, items inside the appliance	Defective noise	Secure components. Leave enough space between the items.

10.3 Technical fault

Your appliance is designed and built to ensure it works reliably and has a long service life. In the unlikely event that a fault occurs during operation, please check whether it is due to an operating error. If so, you will be charged for the callout and repair costs even if it falls within the warranty period.

You can fix the following faults yourself.

10.3.1 Appliance function

Defect	Cause	Remedy
The appliance is not working.	→ The appliance is not switched on.	▶ Switch the appliance on.
	→ The power plug is not properly plugged into the socket.	▶ Check the power plug.
	→ There is something wrong with the power outlet fuse.	▶ Check the fuse.
	→ Power cut	▶ Keep the appliance closed.

Defect	Cause	Remedy
		▶ Protecting food: Lay freezer packs on top of the food or use another freezer if the power is off for a prolonged period. ▶ Do not re-freeze defrosted food,
	→ The appliance plug does not fit the appliance properly.	▶ Check the appliance plug.
Temperature is not cold enough.	→ The appliance door is not closed properly.	▶ Close the appliance door.
	→ Not enough ventilation.	▶ Keep ventilation grille clear, and clean it.
	→ The ambient temperature is too high.	▶ Problem solution: (see 1.4 Appliance range of use)
	→ The appliance was opened too many times or for too long.	▶ Wait to see if the required temperature corrects itself. If not, contact Customer Service. (see 10.4 Customer Service)
	→ The temperature is set incorrectly.	▶ Turn down the temperature and check after 24 hours.
	→ The appliance is too close to a heat source (oven, radiator, etc).	▶ Move the appliance or the heat source.
	→ The appliance was not correctly installed in the recess.	▶ Check if the appliance was installed correctly and that the door closes properly.
The door seal is defective or needs to be replaced for another reason.	→ The door seal can be replaced. It can be replaced without the need for special tools.	▶ Contact Customer Service. (see 10.4 Customer Service)
The appliance builds up too much ice or condensation.	→ The door seal may have slipped out of its groove.	▶ Check that the door seal is well fitted in the groove.

10.3.2 Features

Defect	Cause	Remedy
The internal light does not come on.	→ The appliance is not switched on.	▶ Switch the appliance on.
	→ The door was open for longer than 15 minutes.	▶ Interior lighting turns off automatically after approx. 15 min. with the door open.
	→ The LED interior light is faulty or the lid is damaged.	▶ Contact Customer Service. (see 10.4 Customer Service)

10.4 Customer Service

First check whether you can rectify the fault yourself (see 10 Customer help) . If you cannot rectify the problem, contact Customer Service.

You can find the address in the enclosed brochure “Liebherr-Service” or at home.liebherr.com/service.

WARNING
Unprofessional repair!
Injuries.
- ▶ Have any repairs and action - not expressly specified - on the appliance and mains cable carried out by service personnel only. (see 9 Maintenance)
- ▶ A damaged mains cable may only be replaced by the manufacturer, the manufacturer’s Customer Service or a similarly qualified person.
- ▶ In the case of appliances with an IEC connector, the change may be made by the customer.

10.4.1 Contacting Customer Service

Make sure that the following appliance information is available:

❑ Appliance name (model and index)

❑ Service no. (Service)
❑ Serial no. (S no.)

▶ Call up the appliance information via the display. (see Device information)
-or-
▶ Refer to the type plate for appliance information. (see 10.5 Model plate)

▶ Note down the appliance information.
▶ Notify customer service: Report errors and the appliance information.
▷ This will help us to provide you with a faster, more accurate service.
▶ Follow further instructions from Customer Service.

10.5 Model plate

The model plate is behind the drawers on the inside of the appliance.

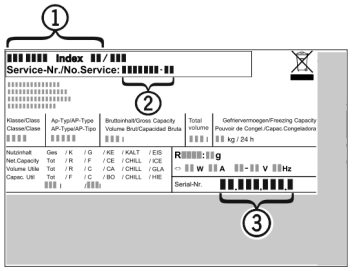

Fig. 85

(1) Appliance description **(3)** Serial no.
(2) Service no.

▶ Note the data on the model plate.

11 Shutting down

▶ Empty the appliance.
▶ Switch off appliance. (see Turn off appliance)
▶ Remove mains connector.
▶ Remove appliance connector if required: Remove and move from left to right at the same time.
▶ Clean appliance. (see 9.4 Cleaning the appliance)
▶ Leave the door open, so that no unpleasant odours arise.

12 Disposal

12.1 Preparing appliance for disposal



Liebherr uses batteries in some of its appliances. In the EU, for environmental reasons, legislation obliges the end user to remove these batteries before disposing of old appliances. If your appliance contains batteries, a corresponding notice is attached.

Lamps — If you can remove the lamps yourself without destroying them, also remove these before disposal.

▶ Take the appliance out of operation.
▶ Appliances with batteries: remove the batteries. For description, see **Maintenance** chapter.
▶ If possible: remove lamps without destroying them.

12.2 Disposing of the appliance in an environmentally friendly manner



The appliance still contains valuable materials and must be disposed of separately from unsorted municipal waste.





Dispose of batteries separately from the old appliance. To do this, you can return the batteries free of charge to retailers as well as recycling centres and collection centres for recyclable materials.

Lamps — Dispose of removed lamps via the respective collection systems.

For Germany: — You can dispose of the appliance free of charge via the class 1 collection containers at the local recycling and recyclable material collection centres. When purchasing a new fridge/freezer, if the sales area > 400 m^2, retailers will also take back the old appliance free of charge.

WARNING
Leaking coolant and oil!
Fire. The coolant contained in the appliance is eco-friendly, but also flammable. The oil contained in the appliance is flammable. Escaping coolant and oil can ignite if the concentration is high enough and in contact with an external heat source.
▶ Do not damage the pipelines of the coolant circuit and the compressor.

▶ Transport the appliance without damaging it.
▶ Dispose of batteries, lamps and the appliance according to the above specifications.



home.liebherr.com/fridge-manuals

EN integrated fridge with BioFresh

Issue date: 20240202

Part number index: 7088425-00

Liebherr-Hausgeräte GmbH
Memminger Straße 77-79
88416 Ochsenhausen
Deutschland