PHILIPS

Television

Quick Start Guide

8389 Series

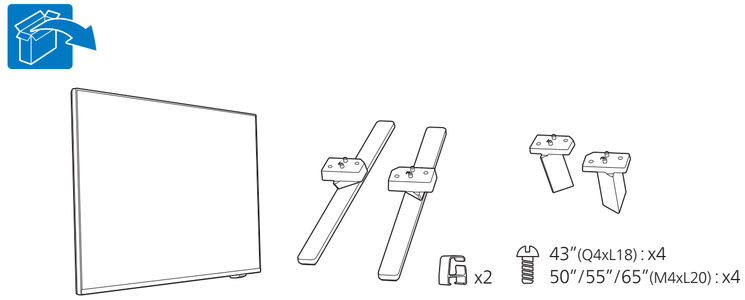

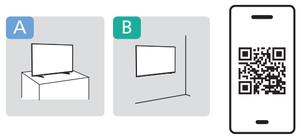

Register to find out more and get support
www.philips.com/TVsupport

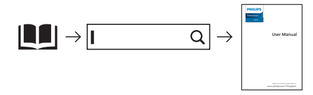

A 43”/50”/55”

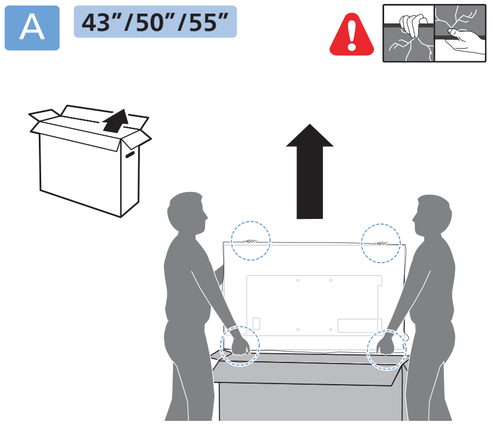

65”

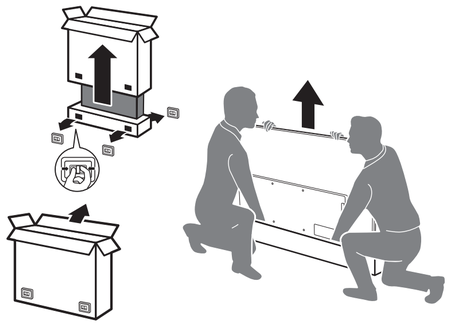

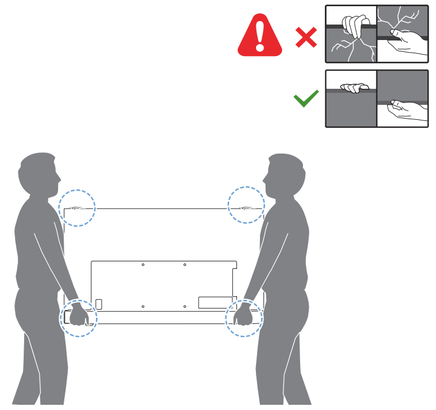

1

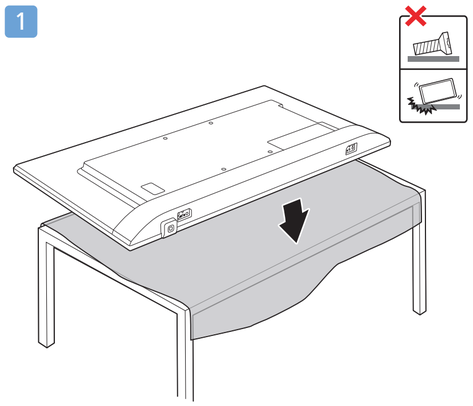

B

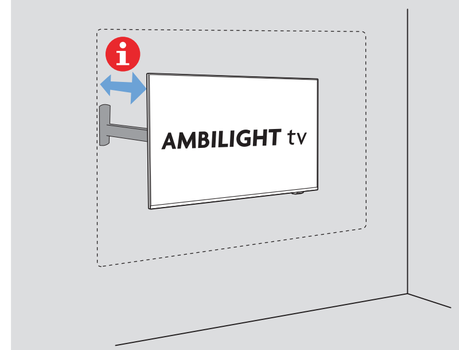

2

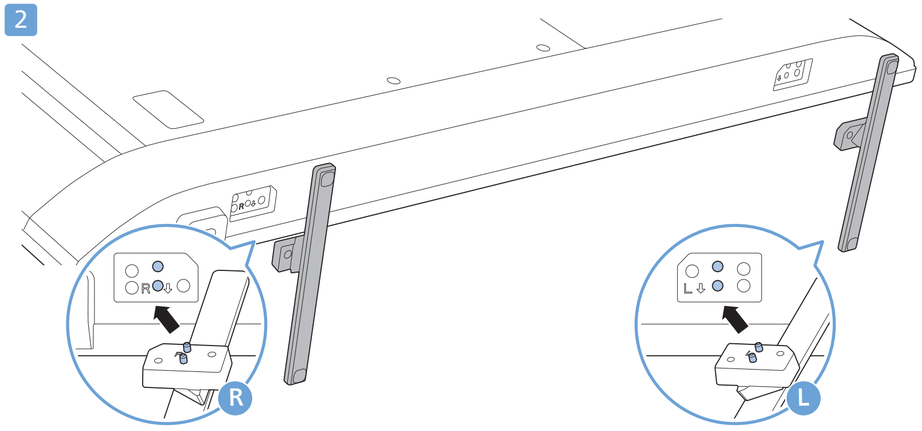

3

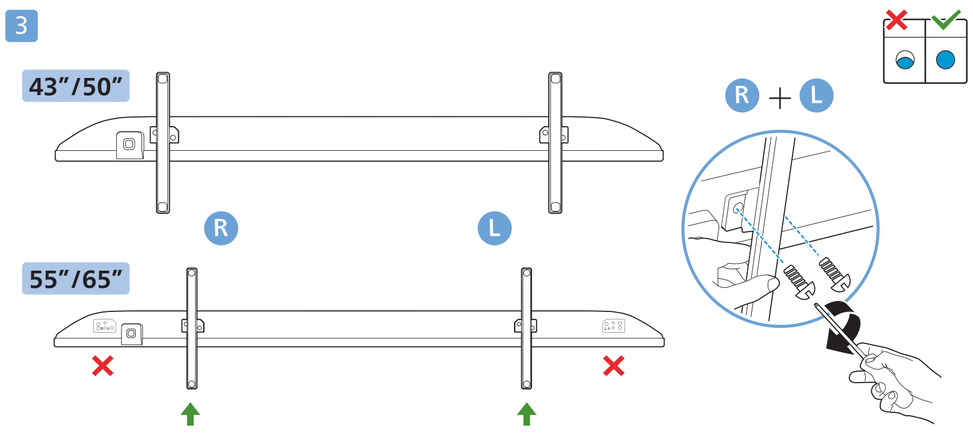

4

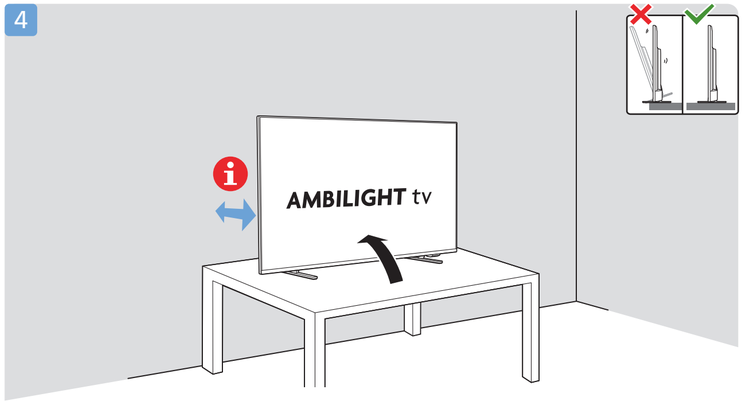

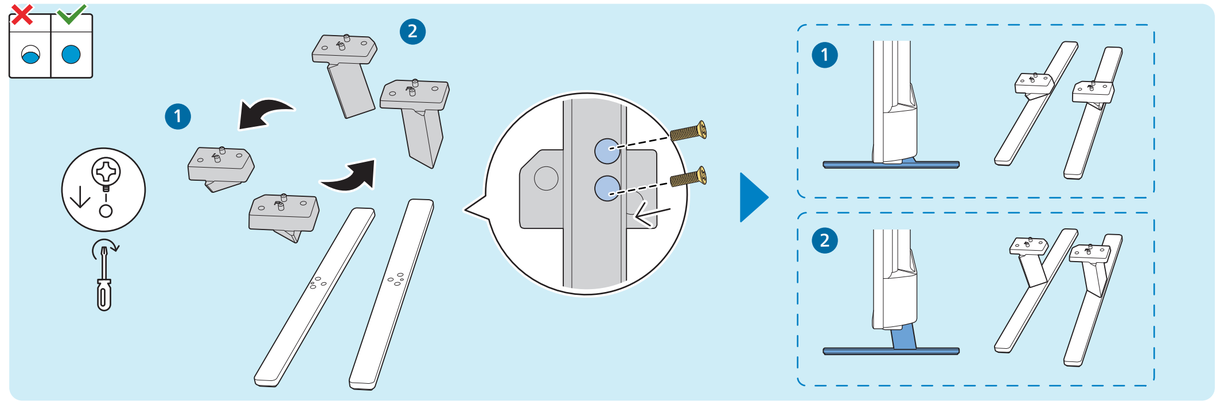

Wall Mount dimensions (x, y)
Dimensioni del montaggio a parete (x, y)

43”	100x200mm M6 (L: 10mm~12mm)	108 cm
50”	200x300mm M6 (L: 10mm~16mm)	126 cm
55”	200x300mm M6 (L: 10mm~16mm)	139 cm
65”	300x300mm M6 (L: 12mm~20mm)	164 cm

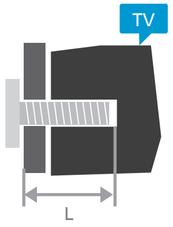

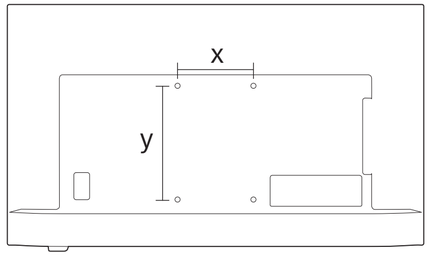

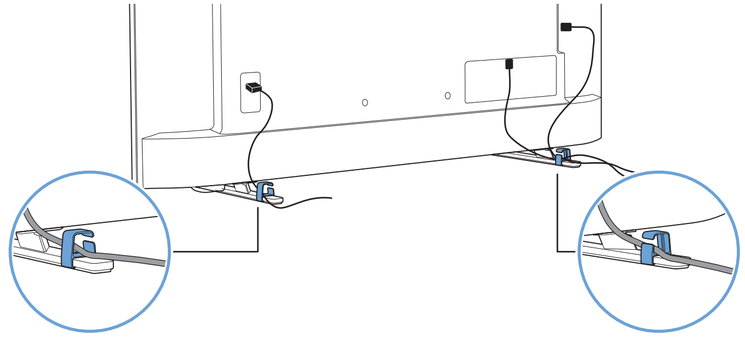

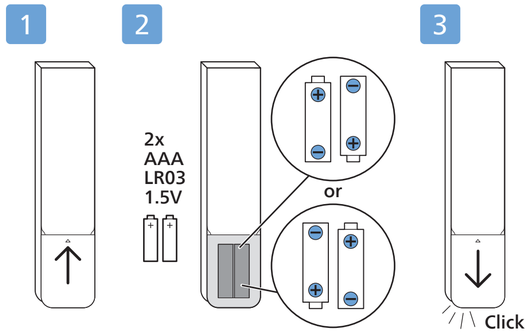

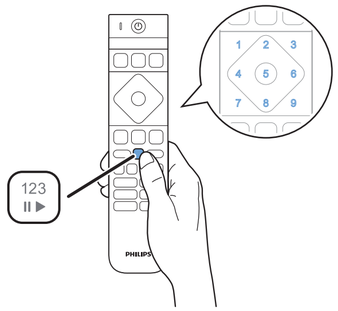

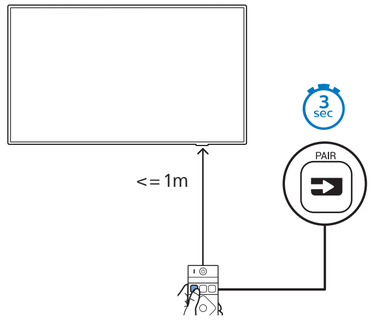

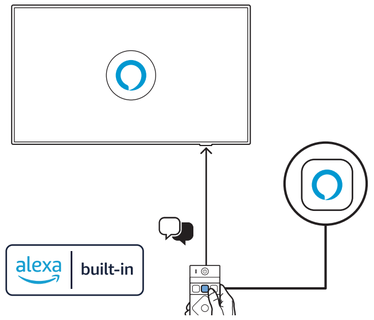

English	Read the safety instructions.	Español	Lea las instrucciones de seguridad.	Polski	Zapoznaj się z instrukcjami bezpieczeństwa.	Svenska	Läs säkerhetsinstruktionerna.
Български	Прочетете инструкциите за безопасност.	Français	Lisez les consignes de sécurité.	Português	Leia as instruções de segurança.	ภาษาไทย	โปรดอ่านคำแนะนำด้านความปลอดภัย
Čeština	Přečtěte si bezpečnostní pokyny.	Italiano	Leggere le istruzioni di sicurezza.	Română	Citiți instrucțiunile de siguranță.	Türkçe	Güvenlik talimatlarını okuyun.
Hrvatski	Pročitajte sigurnosne upute.	Қазақша	Қорғаныстық нұсқаулар.	Русский	Читайте инструкции по технике безопасности.	Українська	Читайте інструкції з техніки безпеки.
Dansk	Læs sikkerhedsforskrifterne.	Latviešu	Izlasiet drošības norādījumus.	Srpski	Pročitajte bezbednosna uputstva.	العربية	قراءة تعليمات السلامة.
Deutsch	Lesen Sie die Sicherheitshinweise.	Lietuvių	Perskaitykite saugos instrukcijas.	Slovenščina	Preberite varnostna navodila.	עברית	קראו את הוראות הבטיחות
Ελληνικά	Διαβάστε τις οδηγίες ασφαλείας.	Magyar	Olvassa el a biztonsági utasításokat.	Slovenský	Prečítajte si bezpečnostné pokyny.		
Eesti	Lugege ohutusnõudeid.	Nederlands	Lees de veiligheidsvoorschriften.	Suomi	Lue turvaohjeet.		
		Norsk	Les sikkerhetsforskriftene.				

FSC Logo
H:12mm



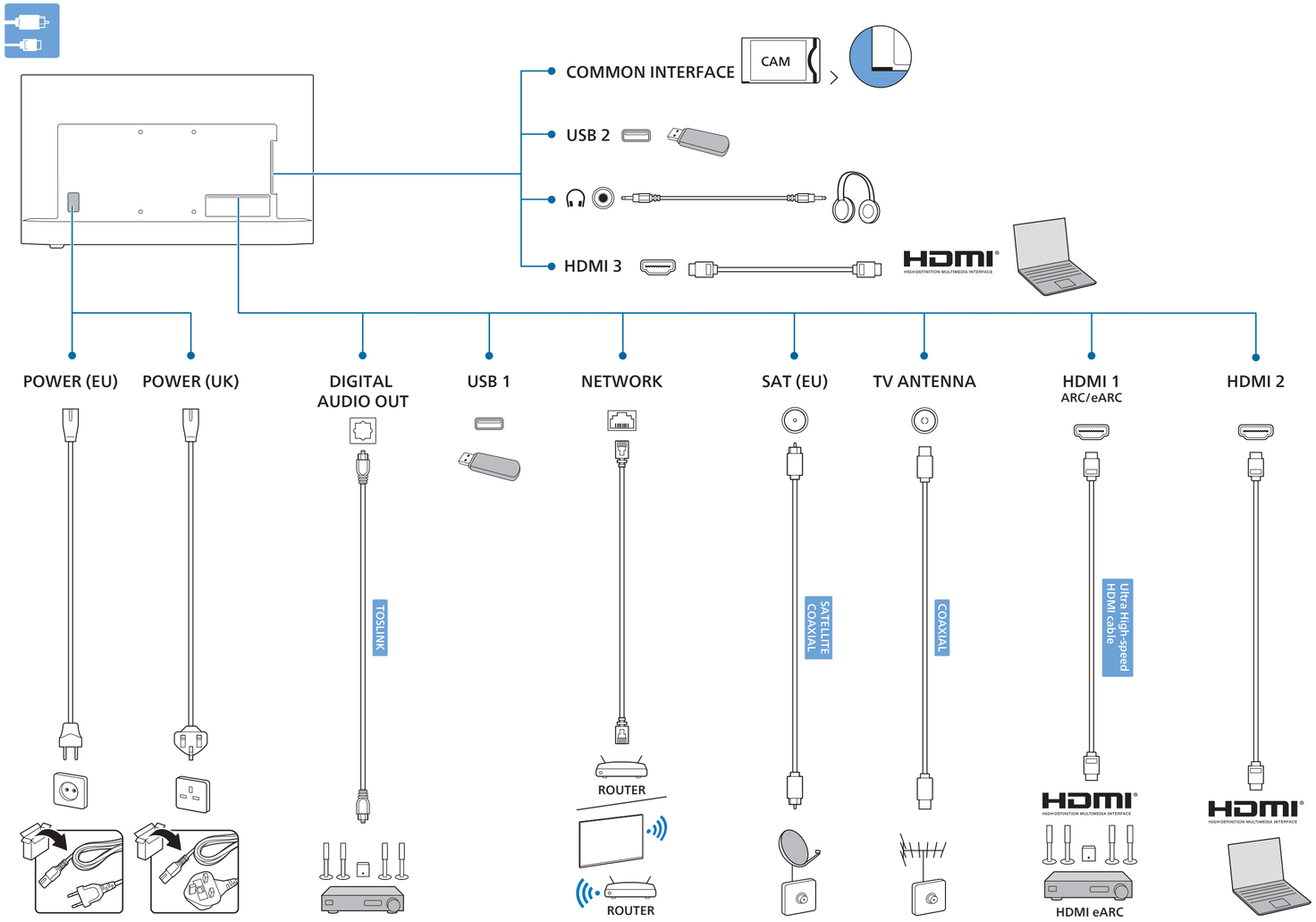

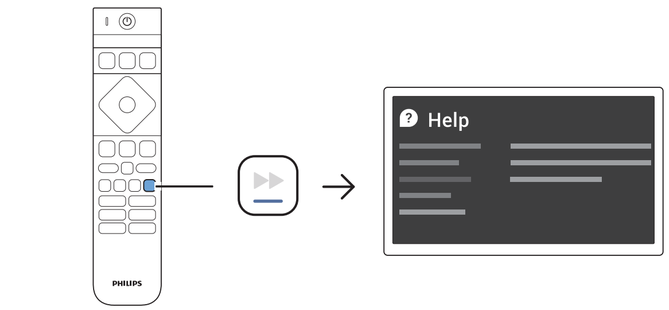

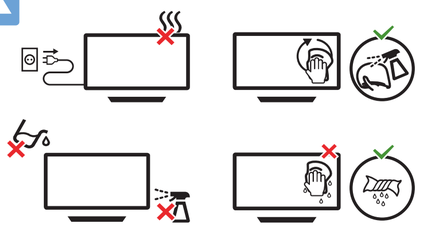

All registered and unregistered trademarks are property of their respective owners.
Specifications are subject to change without notice.
Philips and the Philips Shield Emblem are registered trademarks of Koninklijke Philips N.V. and are used under license.
This product has been manufactured by and is sold under the responsibility of TP Vision Europe B.V., and TP Vision Europe B.V. is the warrantor in relation to this product.
2024© TP Vision Europe B.V. All rights reserved.
www.philips.com/welcome