AEG

aeg.com/register



**OAG7M281DL**
**OAG7M281DW**
**OAG7M281DX**

**EN** User Manual | **Freezer**

**Welcome to AEG! Thank you for choosing our appliance.**

Get usage advice, brochures, trouble shooter, service and repair information:
**www.aeg.com/support**

Subject to change without notice.

## CONTENTS


**1.** SAFETY INFORMATION..... 2
**2.** SAFETY INSTRUCTIONS..... 4
**3.** INSTALLATION..... 6
**4.** OPERATION..... 8
**5.** DAILY USE..... 10
**6.** HINTS AND TIPS..... 12
**7.** CARE AND CLEANING..... 13
**8.** TROUBLESHOOTING..... 14
**9.** NOISES..... 16
**10.** TECHNICAL DATA..... 16
**11.** INFORMATION FOR TEST INSTITUTES..... 17
**12.** ENVIRONMENTAL CONCERNS..... 17


# 1. ⚠ SAFETY INFORMATION

Before the installation and use of the appliance, carefully read the supplied instructions. The manufacturer is not responsible for any injuries or damage that are the result of incorrect installation or usage. Always keep the instructions in a safe and accessible location for future reference.

## 1.1 Children and vulnerable people safety

- This appliance can be used by children aged from 8 years and above and persons with reduced physical, sensory or mental capabilities or lack of experience and knowledge if they have been given supervision or instruction concerning the use of the appliance in a safe way and understand the hazards involved. Children aged from 3 to 8 years and persons with very extensive and complex disabilities are allowed to load and unload the appliance provided that they have been properly instructed. Children of less than 3 years

of age should be kept away from the appliance unless continuously supervised.
- Children should be supervised to ensure that they do not play with the appliance.
- Children shall not carry out cleaning and user maintenance of the appliance without supervision.
- Keep all packaging away from children and dispose of it appropriately.

## 1.2 General Safety

- This appliance is for storing food and baverages only.
- This appliance is designed for single household domestic use in an indoor environment.
- This appliance may be used in, offices, hotel guest rooms, bed & breakfast guest rooms, farm guest houses and other similar accommodation where such use does not exceed (average) domestic usage levels.
- To avoid contamination of food respect the following instructions:
  – do not open the door for long periods;
  – clean regularly surfaces that can come in contact with food and accessible drainage systems;
- WARNING: Keep ventilation openings, in the appliance enclosure or in the built-in structure, clear of obstruction.
- WARNING: Do not use mechanical devices or other means to accelerate the defrosting process, other than those recommended by the manufacturer.
- WARNING: Do not damage the refrigerant circuit.
- WARNING: Do not use electrical appliances inside the food storage compartments of the appliance, unless they are of the type recommended by the manufacturer.
- Do not use water spray and steam to clean the appliance.
- Clean the appliance with a moist soft cloth. Only use neutral detergents. Do not use abrasive products, abrasive cleaning pads, solvents or metal objects.

- When the appliance is empty for long period, switch it off, defrost, clean, dry and leave the door open to prevent mould from developing within the appliance.
- Do not store explosive substances such as aerosol cans with a flammable propellant in this appliance.
- If the supply cord is damaged, it must be replaced by the manufacturer, its Authorised Service Centre or similarly qualified persons in order to avoid a hazard.

## 2. SAFETY INSTRUCTIONS

### 2.1 Installation

**⚠ WARNING!**

Only a qualified person must install this appliance.

- Remove all the packaging.
- Do not install or use a damaged appliance.
- Follow the installation instructions supplied with the appliance.
- Always take care when moving the appliance as it is heavy. Always use safety gloves and enclosed footwear.
- Make sure the air can circulate around the appliance.
- At first installation or after reversing the door wait at least 4 hours before connecting the appliance to the power supply. This is to allow the oil to flow back in the compressor.
- Before carrying out any operations on the appliance (e.g. reversing the door), remove the plug from the power socket.
- Do not install the appliance close to radiators or cookers, ovens, or hobs, unless otherwise specified in the installation instructions.
- Do not expose the appliance to the rain.
- Do not install the appliance where there is direct sunlight.
- Do not install this appliance in areas that are too humid or too cold.
- When you move the appliance, lift it by the front edge to avoid scratching the floor.

### 2.2 Electrical connection

**⚠ WARNING!**

Risk of fire and electric shock.

**⚠ WARNING!**

When positioning the appliance, ensure the supply cord is not trapped or damaged.

**⚠ WARNING!**

Do not use multi-plug adapters and extension cables.

- The appliance must be earthed.
- Make sure that the parameters on the rating plate are compatible with the electrical ratings of the mains power supply.
- Always use a correctly installed shockproof socket.
- Make sure not to cause damage to the electrical components (e.g. mains plug, mains cable, compressor). Contact the Authorised Service Centre or an electrician to change the electrical components.
- The mains cable must stay below the level of the mains plug.
- Connect the mains plug to the mains socket only at the end of the installation. Make sure that there is access to the mains plug after the installation.
- Do not pull the mains cable to disconnect the appliance. Always pull the mains plug.

## 2.3 Use

**⚠ WARNING!**

Risk of injury, burns, electric shock or fire.

 The appliance contains flammable gas, isobutane (R600a), a natural gas with a high level of environmental compatibility. Be careful not to cause damage to the refrigerant circuit containing isobutane.

- Do not change the specification of this appliance.
- Do not put electrical appliances (e.g. ice cream makers) in the appliance unless they are stated applicable by the manufacturer.
- If damage occurs to the refrigerant circuit, make sure that there are no flames and sources of ignition in the room. Ventilate the room.
- Do not let hot items to touch the plastic parts of the appliance.
- Do not put soft drinks in the freezer compartment. This will create pressure on the drink container.
- Do not store flammable gas and liquid in the appliance.
- Do not put flammable products or items that are wet with flammable products in, near or on the appliance.
- Do not touch the compressor or the condenser. They are hot.
- Do not remove or touch items from the freezer compartment if your hands are wet or damp.
- Do not freeze again food that has been thawed.
- Follow the storage instructions on the packaging of frozen food.
- Wrap the food in any food contact material before putting it in the freezer compartment.
- Do not allow food to come in contact with the inner walls of the appliance compartments.

## 2.4 Internal lighting

**⚠ WARNING!**

Risk of electric shock.

- This product contains one or more light sources of energy efficiency class F.
- Concerning the lamp(s) inside this product and spare part lamps sold separately: These lamps are intended to withstand extreme physical conditions in household appliances, such as temperature, vibration, humidity, or are intended to signal information about the operational status of the appliance. They are not intended to be used in other applications and are not suitable for household room illumination.

## 2.5 Care and cleaning

**⚠ WARNING!**

Risk of injury or damage to the appliance.

- Before maintenance, deactivate the appliance and disconnect the mains plug from the mains socket.
- This appliance contains hydrocarbons in the cooling unit. Only a qualified person must do the maintenance and the recharging of the unit.
- Regularly examine the drain of the appliance and if necessary, clean it. If the drain is blocked, defrosted water collects in the bottom of the appliance.

## 2.6 Service

- To repair the appliance contact the Authorised Service Centre. Use original spare parts only.
- Please note that self-repair or non-professional repair can have safety consequences and might void the guarantee.
- The following spare parts will be available for 7 years after the model has been discontinued: thermostats, temperature sensors, printed circuit boards, light sources, door handles, door hinges, trays and baskets. Please note that some of these spare parts are only available to

professional repairers, and that not all spare parts are relevant for all models.
- Door gaskets will be available for 10 years after the model has been discontinued.

### 2.7 Disposal

> ⚠ **WARNING!**
> Risk of injury or suffocation.

- Disconnect the appliance from the mains supply.
- Cut off the mains cable and discard it.
- Remove the door to prevent children and pets to be closed inside of the appliance.
- The refrigerant circuit and the insulation materials of this appliance are ozone-friendly.
- The insulation foam contains flammable gas. Contact your municipal authority for information on how to discard the appliance correctly.
- Do not cause damage to the part of the cooling unit that is near the heat exchanger.

## 3. INSTALLATION

> ⚠ **WARNING!**
> Refer to Safety chapters.

### 3.1 Dimensions

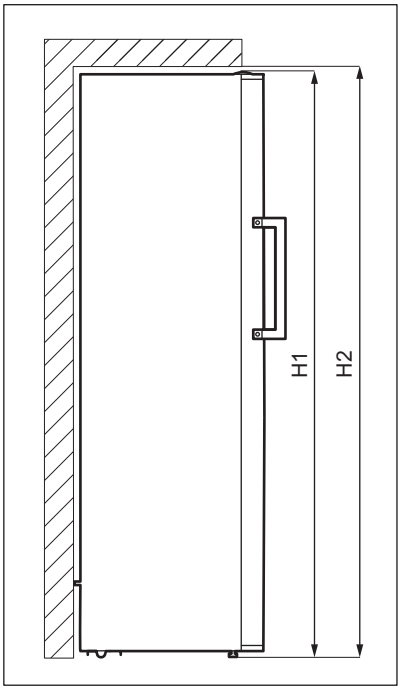


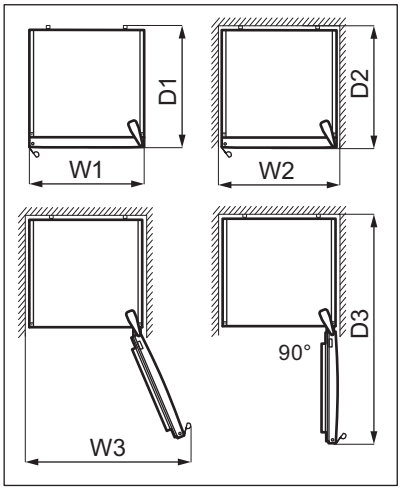

| Overall dimensions [1] | | |
|---|---|---|
| H1 | mm | 1860 |
| W1 | mm | 595 |
| D1 | mm | 650 |

[1] the height, width and depth of the appliance without the handle

| Space required in use [2] | | |
|---|---|---|
| H2 | mm | 1900 |
| W2 | mm | 600 |
| D2 | mm | 718 |

[2] the height, width and depth of the appliance including the handle, plus the space necessary for free circulation of the cooling air

| Overall space required in use [3] | | |
|---|---|---|
| H2 | mm | 1900 |
| W3 | mm | 649 |
| D3 | mm | 1224 |

[3] the height, width and depth of the appliance including the handle, plus the space necessary for free circulation of the cooling air, plus the space necessary to allow door opening to the minimum angle permitting removal of all internal equipment

## 3.2 Location

This appliance is not intended to be used as a built-in appliance.

In case of different installation from freestanding respecting space required in use dimensions, the appliance will function correctly but energy consumption might increase slightly.

To ensure appliance's best functionality, you should not install the appliance in the nearby of the heat source (oven, stoves, radiators, cookers or hobs) or in a place with direct sunlight. Make sure that air can circulate freely around the back of the cabinet.

This appliance should be installed in a dry, well ventilated indoor position.

To ensure best performance, if the appliance is positioned below an overhanging wall unit, the minimum distance between the top of the cabinet shall be maintained. Ideally, however, the appliance should not be positioned below overhanging wall units. One or more adjustable feet at the base of the cabinet ensure that the appliance stands level.

**⚠ CAUTION!**

If you position the appliance against the wall, use back spacers provided or keep the minimum distance indicated in the installation instructions.

**⚠ CAUTION!**

If you install the appliance next to a wall, refer to the installation instructions to understand the minimum distance between the wall and the side of the appliance where door hinges are to provide enough space to open the door when the internal equipment is removed (e.g. when cleaning).

This appliance is intended to be used at ambient temperature ranging from 10°C to 43°C.

ⓘ

The correct operation of the appliance can only be guaranteed within the specified temperature range.

ⓘ

If you have any doubts regarding where to install the appliance, please turn to the vendor, to our customer service or to the nearest Authorised Service Centre.

ⓘ

It must be possible to disconnect the appliance from the mains power supply. The plug must therefore be easily accessible after installation.

## 3.3 Electrical connection

- Before plugging in, ensure that the voltage and frequency shown on the rating plate correspond to your domestic power supply.

- The appliance must be earthed. The power supply cable plug is provided with a contact for this purpose. If the domestic power supply socket is not earthed, connect the appliance to a separate earth in compliance with current regulations, consulting a qualified electrician.
- The manufacturer declines all responsibility if the above safety precautions are not observed.

### 3.4 Levelling

When placing the appliance make sure that it stands level. This can be achieved by two adjustable feet at the bottom in front.

### 3.5 Rear spacers

In the bag with the documentation, there are two spacers which must be fitted as shown in the figure.

If you position the appliance against a wall in a freestanding installation, install the rear spacers in order to guarantee the minimum distance required for air circulation.

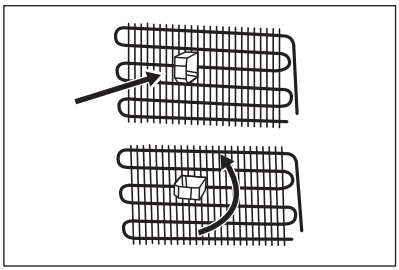

### 3.6 Door reversibility

Please refer to the separate document with instructions on installation and door reversal.

**⚠ CAUTION!**

At every stage of reversing the door protect the floor from scratching with a durable material.

### 3.7 Easy opening

The cooling air contracts inside the appliance causing suction, making it difficult to open the door. To make opening the appliance easier, use an adhesive overlay from the bag with documentation.

To install the overlay:

1. Peel off the liner from the back of the overlay.
2. Stick the overlay on the frame at the bottom of the appliance, at a distance of min. 60 mm to 100 mm from the hinge.

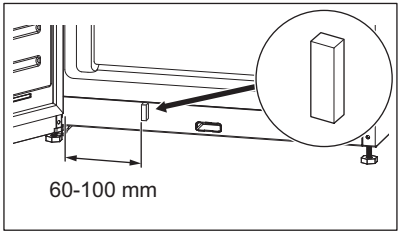


ⓘ

Keep the overlay away from children. Hazard of swallowing.

## 4. OPERATION

### 4.1 Control panel

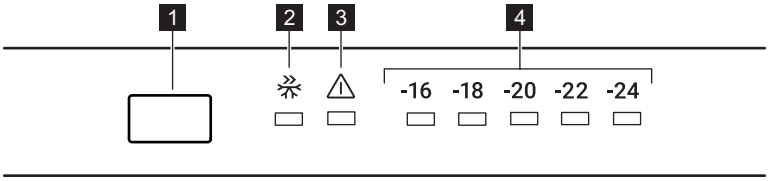


1 Temperature regulation button

2 Super Freeze indicator

3 Alarm indicator
4 Temperature indicators

## 4.2 Switching on and off

To switch on the appliance, insert the plug into the wall socket.

ⓘ
When the appliance is switched on for the first time, the interior light may turn on after a one-minute delay due to opening tests.

To switch off the appliance, unplug it.

## 4.3 Temperature regulation

Recommended set temperature is:
- -18°C for the freezer.

The temperature range may vary between -16°C and -24°C .

To set the temperature of the appliance, press the temperature regulation button repeatedly until you reach the desired temperature of the compartment.

Choose the setting keeping in mind that the temperature inside the appliance depends on:

- room temperature,
- frequency of opening the door,
- quantity of food stored,
- appliance location.

A medium setting is generally the most suitable one.

The temperature indicators show the set temperature.

ⓘ
The set temperature will be reached within 24 hours.

## 4.4 High temperature alarm

ⓘ
The alarm activates when you plug the appliance for the first time.

The alarm activates when the temperature in the appliance is too high.

During the alarm:

- the alarm indicator flashes,
- the temperature indicator -24 flashes,
- the acoustic alarm beeps.

**Turning off the alarm**

- Press a key on the control panel to turn off the alarm. The alarm indicator is on until the temperature is restored.
- Alarm beeping turns off automatically after 1 hour. Alarm indicator flashes and temperature indicator -24 flashes.
- If the appliance is back to the set temperature, the alarm beeping and alarm indicator turn off. Check if the food inside is not spoiled or thawed. If yes, refer to the "Thawing" section.

ⓘ
Refer to the "Temperature regulation" section to set the appliance temperature.

## 4.5 Super Freeze function

The Super Freeze function is used to perform pre-freezing and fast freezing in sequence of freezer compartment. It accelerates the freezing of fresh food and, at the same time, protects foodstuffs already stored from undesirable warming.

ⓘ
To freeze fresh food activate the Super Freeze function at least 3 hours before placing the food to complete pre-freezing.

To activate this function, press repeatedly the temperature regulation button until the Super Freeze indicator appears.

This function stops automatically after 24 hours.

You can deactivate the Super Freeze function before its automatic end by repeating the procedure until the Super Freeze indicator turns off or by selecting a different temperature of the freezer compartment.

## 4.6 Alarm

In case of cooling issues, power interruptions or significant temperature changes inside your appliance, the alarm indicator lights up red and the sound is on.

ⓘ

The alarm may light when you plug the appliance for the first time.

Refer to the "Troubleshooting" chapter for more possible causes of triggering the alarm, and solutions on how to deactivate it.

### 4.7 Standby mode

Activate the Standby mode to switch off the freezing function and therefore lower the energy consumption of the appliance.

To activate the Standby mode:

1. Set the temperature for -16°C. Refer to the "Temperature regulation" section.
2. Press and hold the temperature regulation button until all temperature indicators blink 3 times.

ⓘ

If you press the temperature regulation button while the Standby mode is on, all temperature indicators blink 3 times.

You can deactivate the Standby mode by repeating the above procedure.

ⓘ

During the Standby mode, the temperature inside the appliance may rise above the set -16°C. If that happens after the mode deactivates, the alarm indicator lights and the sound is on. When the appliance automatically lowers the temperature, the alarm indicator and the sound alarm deactivate.

## 5. DAILY USE

### 5.1 Removing and installing the door shelf

To remove the door shelf:

1. Hold the left side of the shelf.
2. Lift the right side of the shelf until it comes free from the fastener.

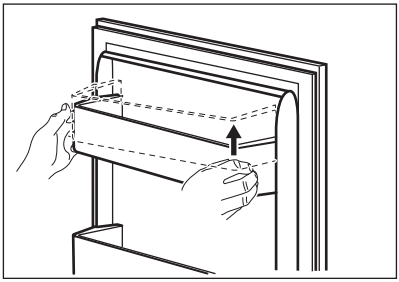

3. Lift the left side of the shelf and remove it.

To put the shelf back in:

1. Place the shelf flat on the door.
2. Push two sides of the shelf downwards at the same time so that the shelf fits both fasteners.

### 5.2 Movable shelf

The walls of the freezer compartment are equipped with a series of runners so that you can easily remove the shelf.

### 5.3 Removing and installing the freezer drawers

To remove a drawer from the freezer compartment:

1. Open the freezer door completely.
2. Pull the drawer out until it stops.
3. Lift slightly the front of the drawer and detach it from the appliance.

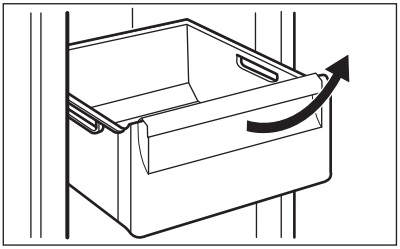

ⓘ

To put the drawer back into its initial position, follow the above steps in reverse order.

## 5.4 MULTIFLOW

The refrigerator compartment is equipped with the MULTIFLOW device that allows for rapid and more effective cooling of food and maintaining a more uniform temperature in each part of the refrigerator compartment.

This device activates automatically when needed.

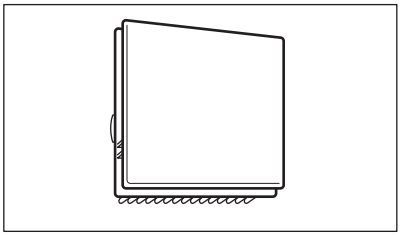

MULTIFLOW operates only when the door is closed.

ⓘ

Do not block the air vents to allow better cooling.

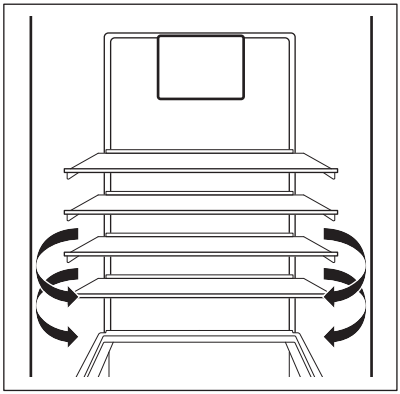

ⓘ

Do not remove the MULTIFLOW panel. Do not use water spray or steam to clean the appliance. For cleaning instructions, refer to the "Care and cleaning" chapter.

## 5.5 Freezing fresh food

The freezer compartment is suitable for freezing fresh food and storing frozen and deep-frozen food for a long time.

To freeze fresh food activate the Super Freeze function at least 3 hours before placing the food to be frozen in the freezer compartment.

The maximum amount of food that can be frozen without adding other fresh food during 24 hours is specified on the rating plate (a label located inside the appliance).

## 5.6 Storage of frozen food

When activating an appliance for the first time or after a period out of use, before putting the products in the compartment let the appliance run at least 3 hours with the Super Freeze function switched on.

The freezer drawers ensure that it is quick and easy to find the food package you want. If large quantities of food are to be stored, remove all drawers, except for the bottom drawer which needs to be in place to provide good air circulation.

Keep the food on the shelves no closer than 15 mm from the door.

⚠ **CAUTION!**

In the event of accidental defrosting, for example due to a power failure, if the power has been off for longer than the value shown on rating plate under "rising time", the defrosted food must be consumed quickly or cooked immediately then cooled and then re-frozen.

## 5.7 Thawing

Deep-frozen or frozen food, prior to being used, can be thawed in the refrigerator or at room temperature, depending on the time available for this operation.

Small pieces may even be cooked still frozen, directly from the freezer: in this case, cooking will take longer.

### 5.8 Ice-cube tray

This appliance is equipped with one or more trays for the production of ice-cubes.

ⓘ

Do not use metallic instruments to remove the trays from the freezer .

1. Fill the ice-cube trays with water.
2. Put them in the freezer .

## 6. HINTS AND TIPS

### 6.1 Hints for energy saving

- The internal configuration of the appliance is the one that ensures the most efficient use of energy.
- Do not open the door frequently or leave it open longer than necessary.
- The colder the temperature setting, the higher the energy consumption.
- Ensure a good ventilation. Do not cover the ventilation grilles or holes.

### 6.2 Hints for freezing

- Activate Super Freeze function at least 3 hours before placing the food inside the freezer compartment.
- Before freezing wrap and seal fresh food in: aluminium foil, plastic film or bags, airtight containers with lid.
- For more efficient freezing and thawing divide food into small portions.
- It is recommended to put labels and dates on all your frozen food. This will help to identify foods and to know when they should be used before their deterioration.
- The food should be fresh when being frozen to preserve good quality. Especially fruits and vegetables should be frozen after the harvest to preserve all of their nutrients.
- Do not freeze bottles or cans with liquids, in particular drinks containing carbon dioxide - they may explode during freezing.
- Do not put hot food in the freezer compartment. Cool it down at room temperature before placing it inside the compartment.
- To avoid increase in temperature of already frozen food, do not place fresh unfrozen food directly next to it. Place food at room temperature in the part of the freezer compartment where there is no frozen food.
- Do not eat ice cubes, water ices or ice lollies immediately after taking them out of the freezer. Risk of frostbites.
- Do not re-freeze defrosted food. If the food has defrosted, cook it, cool it down and then freeze it.

### 6.3 Hints for storage of frozen food

- Freezer compartment is the one marked with ✳✳✳.
- Higher temperature setting inside the appliance may lead to shorter shelf life.
- The whole freezer compartment is suitable for storage of frozen food products.
- Leave enough space around the food to allow air to circulate freely.
- For adequate storage refer to food packaging label to see the shelf life of food.
- It is important to wrap the food in such a way that prevents water, humidity or condensation from getting inside.

### 6.4 Shopping tips

After grocery shopping:

- Ensure that the packaging is not damaged - the food could be deteriorated. If the package is swollen or wet, it might have not been stored in the optimal conditions and defrosting may have already started.
- To limit the defrosting process buy frozen goods at the end of your grocery shopping and transport them in a thermal and insulated cool bag.
- Place the frozen foods immediately in the freezer after coming back from the shop.

- If food has defrosted even partially, do not re-freeze it. Consume it as soon as possible.
- Respect the expiry date and the storage information on the package.

### 6.5 Shelf life

| Type of food | Shelf life (months) |
|---|---|
| Bread | 3 |
| Fruits (except citrus) | 6 - 12 |
| Vegetables | 8 - 10 |
| Leftovers without meat | 1 - 2 |
| **Dairy food:** | |
| Butter | 6 - 9 |
| Soft cheese (e.g. mozzarella) | 3 - 4 |
| Hard cheese (e.g. parmesan, cheddar) | 6 |
| **Seafood:** | |
| Fatty fish (e.g. salmon, mackerel) | 2 - 3 |
| Lean fish (e.g. cod, flounder) | 4 - 6 |
| Shrimps | 12 |
| Shucked clams and mussels | 3 - 4 |
| Cooked fish | 1 - 2 |
| **Meat:** | |
| Poultry | 9 - 12 |
| Beef | 6 - 12 |
| Pork | 4 - 6 |
| Lamb | 6 - 9 |
| Sausage | 1 - 2 |
| Ham | 1 - 2 |
| Leftovers with meat | 2 - 3 |

## 7. CARE AND CLEANING

**⚠ WARNING!**

Refer to Safety chapters.

### 7.1 Cleaning the interior

Before using the appliance for the first time, the interior and all internal accessories should be washed with lukewarm water and some neutral soap to remove the typical smell of a brand-new product, then dried thoroughly.

**⚠ CAUTION!**

Do not use detergents, abrasive powders, chlorine or oil-based cleaners as they will damage the finish.

**⚠ CAUTION!**

The accessories and parts of the appliance are not suitable for washing in a dishwasher.

### 7.2 Periodic cleaning

The equipment has to be cleaned regularly:

1. Clean the inside and accessories with lukewarm water and some neutral soap.
2. Regularly check the door seals and wipe them clean to ensure they are clean and free from debris.
3. Clean the condenser with a brush at least twice a year.

4. Clean the evaporator tray periodically to remove accumulated water.
5. Rinse and dry thoroughly.

### 7.3 Defrosting of the appliance

The defrosting of the freezer compartment is automatic. Although, a layer of frost may occur on the freezer compartment's interior walls if the freezer door is opened frequently or kept open too long.

### 7.4 Periods of non-operation

When the appliance is not in use for long periods, take the following precautions:

1. Disconnect the appliance from electricity supply.
2. Remove all food.
3. Clean the appliance and all accessories.
4. Leave the door open to prevent unpleasant smells.

## 8. TROUBLESHOOTING

**⚠ WARNING!**
Refer to Safety chapters.

### 8.1 What to do if...

| Problem | Possible cause | Solution |
|---|---|---|
| The appliance does not operate. | The appliance is switched off. | Switch on the appliance. |
| | The mains plug is not connected to the mains socket correctly. | Connect the mains plug to the mains socket correctly. |
| | There is no voltage in the mains socket. | Connect a different electrical appliance to the mains socket. Contact a qualified electrician. |
| The appliance is noisy. | The appliance is not supported properly. | Check if the appliance stands stable. |
| The compressor operates continually. | Temperature is set incorrectly. | Refer to the "Operation" chapter. |
| | Many food products were put in at the same time. | Wait a few hours and then check the temperature again. |
| | The room temperature is too high. | Refer to the "Installation" chapter. |
| | Food products placed in the appliance were too warm. | Allow food products to cool to room temperature before storing. |
| | The door is not closed correctly. | Refer to the "Closing the door" section. |
| | The Super Freeze function is switched on. | Refer to the "Super Freeze function" section. |
| The compressor does not start immediately after pressing the "Super Freeze", or after changing the temperature. | The compressor starts after a period of time. | This is normal, no error has occurred. |
| Door is misaligned or interferes with ventilation grill. | The appliance is not levelled. | Refer to the installation instructions. |

| Problem | Possible cause | Solution |
|---|---|---|
| Door does not open easily. | You attempted to re-open the door immediately after closing. | Wait a few seconds between closing and re-opening of the door. |
| The lamp does not work. | The lamp is defective. | Contact the nearest Authorized Service Centre. |
| There is too much frost and ice. | The door is not closed correctly. | Refer to the "Closing the door" section. |
| | The gasket is deformed or dirty. | Refer to the "Closing the door" section. |
| | Food products are not wrapped properly. | Wrap the food products better. |
| | Temperature is set incorrectly. | Refer to the "Operation" chapter. |
| | Appliance is fully loaded and is set to the lowest temperature. | Set a higher temperature. Refer to the "Operation" chapter. |
| | Temperature set in the appliance is too low and the ambient temperature is too high. | Set a higher temperature. Refer to the "Operation" chapter. |
| Water flows on the floor. | The melting water outlet is not connected to the evaporative tray above the compressor. | Attach the melting water outlet to the evaporative tray. |
| Temperature cannot be set. | The Super Freeze function is switched on. | Switch off the Super Freeze function manually, or wait until the function deactivates automatically to set the temperature. Refer to the "Super Freeze function" section. |
| The temperature in the appliance is too low/too high. | The temperature is not set correctly. | Set a higher/lower temperature. |
| | The door is not closed correctly. | Refer to the "Closing the door" section. |
| | The food products' temperature is too high. | Let the food products temperature decrease to room temperature before storage. |
| | Many food products are stored at the same time. | Store less food products at the same time. |
| | The door has been opened often. | Open the door only if necessary. |
| | The Super Freeze function is switched on. | Refer to the "Super Freeze function" section. |
| | There is no cold air circulation in the appliance. | Make sure that there is cold air circulation in the appliance. Refer to the "Hints and tips" chapter. |

ⓘ

If the advice does not lead to the desired result, call the nearest Authorized Service Centre.

## 8.2 Replacing the lamp

The appliance is equipped with a longlife LED interior light.

Only service is allowed to replace the lighting device. Contact your Authorised Service Centre.

### 8.3 Closing the door

1. Clean the door gaskets.
2. If necessary, adjust the door. Refer to the "Installation" chapter.
3. If necessary, replace the defective door gaskets. Contact the Authorised Service Centre.

## 9. NOISES

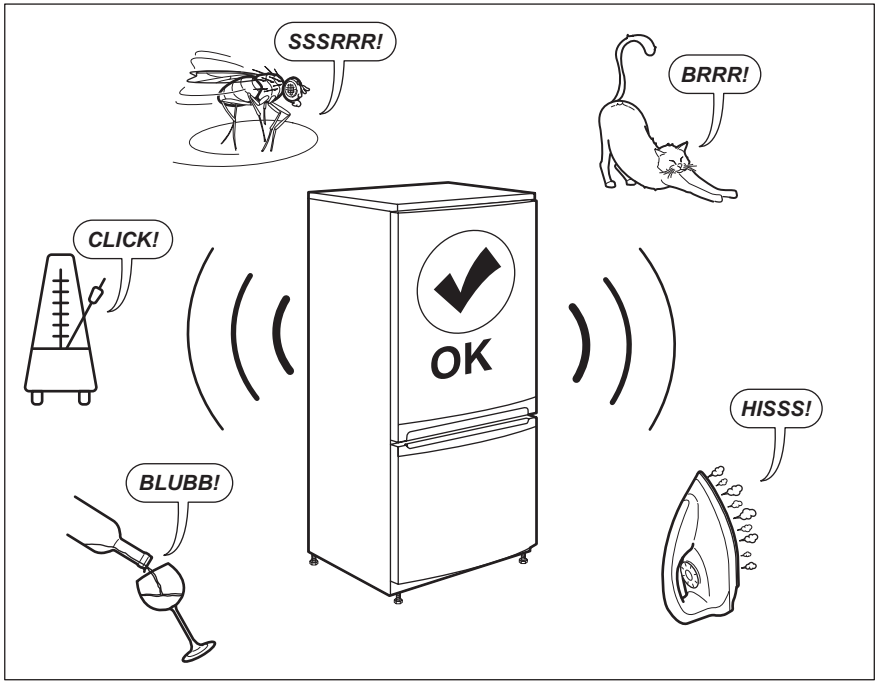


## 10. TECHNICAL DATA

The technical information is situated in the rating plate on the internal side of the appliance and on the energy label.

The QR code on the energy label supplied with the appliance provides a web link to the information related to the performance of the appliance in the EU EPREL database. Keep the energy label for reference together with the user manual and all other documents provided with this appliance.

It is also possible to find the same information in EPREL using the link *https://eprel.ec.europa.eu* and the model name and product number that you find on the rating plate of the appliance.

See the link *www.theenergylabel.eu* for detailed information about the energy label.

## **11.** INFORMATION FOR TEST INSTITUTES

Installation and preparation of the appliance for any EcoDesign verification shall be compliant with EN 62552. Ventilation requirements, recess dimensions and minimum rear clearances shall be as stated in this User Manual at Chapter 3. Please contact the manufacturer for any other further information, including loading plans.

## **12.** ENVIRONMENTAL CONCERNS

Recycle materials with the symbol . Put the packaging in relevant containers to recycle it. Help protect the environment and human health by recycling waste of electrical and electronic appliances. Do not dispose of appliances marked with the symbol with the household waste. Return the product to your local recycling facility or contact your municipal office.

aeg.com

212003185-B-472023

