Electrolux

electrolux.com/register



**COB8S09WX**
**EOB8S09WX**
**LOB8S09WX**

**EN** User Manual | **Steam oven**

# INSTALLATION

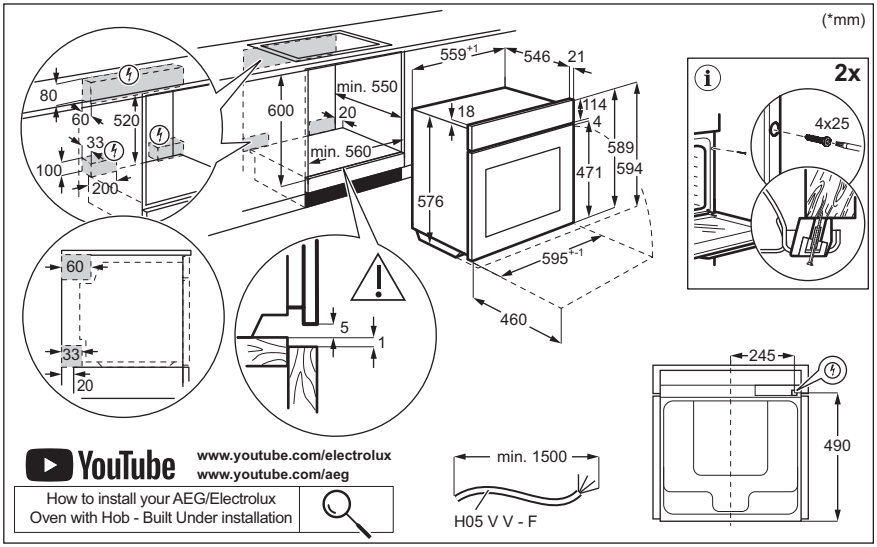


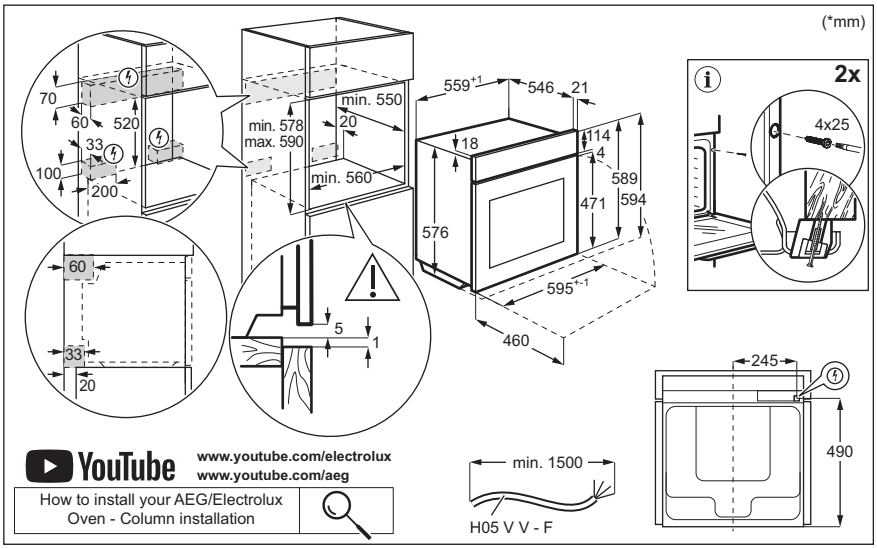

**Welcome to Electrolux! Thank you for choosing our appliance.**

Get usage advice, brochures, troubleshooting, service and repair information:
**www.electrolux.com/support**

Subject to change without notice.

## CONTENTS


**1.** SAFETY INFORMATION....3
**2.** SAFETY INSTRUCTIONS....5
**3.** PRODUCT DESCRIPTION....7
**4.** CONTROL PANEL....8
**5.** BEFORE FIRST USE....9
**6.** DAILY USE....10
**7.** ADDITIONAL FUNCTIONS....14
**8.** CLOCK FUNCTIONS....14
**9.** USING THE ACCESSORIES....15
**10.** HINTS AND TIPS....17
**11.** CARE AND CLEANING....19
**12.** TROUBLESHOOTING....22
**13.** ENERGY EFFICIENCY....24
**14.** ENVIRONMENTAL CONCERNS....25


# 1. ⚠ SAFETY INFORMATION

Before the installation and use of the appliance, carefully read the supplied instructions. The manufacturer is not responsible for any injuries or damage that are the result of incorrect installation or usage. Always keep the instructions in a safe and accessible location for future reference.

## 1.1 Children and vulnerable people safety

- This appliance can be used by children aged from 8 years and above and persons with reduced physical, sensory or mental capabilities or lack of experience and knowledge if they have been given supervision or instruction concerning the use of the appliance in a safe way and understand the hazards involved. Children of less than 8 years of age and persons with very extensive and complex disabilities shall be kept away from the appliance unless continuously supervised.

- Children should be supervised to ensure that they do not play with the appliance and mobile devices with the app.
- Keep all packaging away from children and dispose of it appropriately.
- WARNING: The appliance and its accessible parts become hot during use. Keep children and pets away from the appliance when in use and when cooling down.
- If the appliance has a child safety device, it should be activated.
- Children shall not carry out cleaning and user maintenance of the appliance without supervision.

## 1.2 General Safety

- This appliance is for cooking purposes only.
- This appliance is designed for single household domestic use in an indoor environment.
- This appliance may be used in offices, hotel guest rooms, bed & breakfast guest rooms, farm guest houses and other similar accommodation where such use does not exceed (average) domestic usage levels.
- Only a qualified person must install this appliance and replace the cable.
- Do not use the appliance before installing it in the built-in structure.
- Disconnect the appliance from the power supply before carrying out any maintenance.
- If the supply cord is damaged, it must be replaced by the manufacturer, its Authorised Service Centre or similarly qualified persons to avoid an electrical hazard.
- WARNING: Ensure that the appliance is switched off before replacing the lamp to avoid the possibility of electric shock.
- WARNING: The appliance and its accessible parts become hot during use. Care should be taken to avoid touching heating elements or the surface of the appliance cavity.
- Always use oven gloves to remove or insert accessories or ovenware.

- Use only the food sensor (core temperature sensor) recommended for this appliance.
- To remove the shelf supports first pull the front of the shelf support and then the rear end away from the side walls. Install the shelf supports in the opposite sequence.
- Do not use a steam cleaner to clean the appliance.
- Do not use harsh abrasive cleaners or sharp metal scrapers to clean the glass door since they can scratch the surface, which may result in shattering of the glass.

## **2.** SAFETY INSTRUCTIONS

### 2.1 Installation

> ⚠ **WARNING!**
>
> Only a qualified person must install this appliance.

- Remove all the packaging.
- Do not install or use a damaged appliance.
- Follow the installation instructions available on our website.
- Always take care when moving the appliance as it is heavy. Always use safety gloves and enclosed footwear.
- Do not pull the appliance by the handle.
- Install the appliance in a safe and suitable place that meets installation requirements.
- Keep the minimum distance from other appliances and units.
- Before mounting the appliance, check if the appliance door opens without restraint.
- The appliance is equipped with an electric cooling system. It must be operated with the electric power supply.

### 2.2 Electrical connection

> ⚠ **WARNING!**
>
> Risk of fire and electric shock.

- All electrical connections should be made by a qualified electrician.
- The appliance must be earthed.
- Make sure that the parameters on the rating plate are compatible with the electrical ratings of the mains power supply.
- Always use a correctly installed shockproof socket.
- Do not use multi-plug adapters and extension cables.
- Make sure not to cause damage to the mains plug and to the mains cable. Should the mains cable need to be replaced, this must be carried out by our Authorised Service Centre.
- Do not let mains cables touch or come near the appliance door or the niche below the appliance, especially when it operates or the door is hot.
- The shock protection of live and insulated parts must be fastened in such a way that it cannot be removed without tools.
- Connect the mains plug to the mains socket only at the end of the installation. Make sure that there is access to the mains plug after the installation.
- If the mains socket is loose, do not connect the mains plug.
- Do not pull the mains cable to disconnect the appliance. Always pull the mains plug.
- Use only correct isolation devices: line protecting cut-outs, fuses (screw type fuses removed from the holder), earth leakage trips and contactors.
- The electrical installation must have an isolation device which lets you disconnect the appliance from the mains at all poles. The isolation device must have a contact opening width of minimum 3 mm.

- This appliance is supplied with a main plug and a main cable.

## 2.3 Use

**⚠ WARNING!**

Risk of injury, burns and electric shock or explosion.

- Do not change the specification of this appliance.
- Make sure that the ventilation openings are not blocked.
- Do not let the appliance stay unattended during operation.
- Deactivate the appliance after each use.
- Be careful when you open the appliance door while the appliance is in operation. Hot air can release.
- Do not operate the appliance with wet hands or when it has contact with water.
- Do not apply pressure on the open door.
- Do not use the appliance as a work surface or as a storage surface.
- Open the appliance door carefully. The use of ingredients with alcohol can cause a mixture of alcohol and air.
- Do not let sparks or open flames to come in contact with the appliance when you open the door.
- Always use glass and jars approved for preserving purposes.
- Do not put flammable products or items that are wet with flammable products in, near or on the appliance.
- Do not share your Wi-Fi password.

**⚠ WARNING!**

Risk of damage to the appliance.

- To prevent damage or discoloration to the enamel:
  - do not put ovenware or other objects in the appliance directly on the bottom.
  - do not put aluminium foil directly on the bottom of cavity of the appliance.
  - do not put water directly into the hot appliance.
  - do not keep moist dishes and food in the appliance after you finish the cooking.
  - be careful when you remove or install the accessories.
- Discoloration of the enamel or stainless steel has no effect on the performance of the appliance.
- Use a deep pan for moist cakes. Fruit juices cause stains that can be permanent.
- Always cook with the appliance door closed.
- If the appliance is installed behind a furniture panel (e.g. a door) make sure the door is never closed when the appliance operates. Heat and moisture can build up behind a closed furniture panel and cause subsequent damage to the appliance, the housing unit or the floor. Do not close the furniture panel until the appliance has cooled down completely after use.

## 2.4 Care and cleaning

**⚠ WARNING!**

Risk of injury, fire, or damage to the appliance.

- Before maintenance, deactivate the appliance and unplug it from the mains.
- Ensure the appliance is cold to avoid glass breakage. If the door glass panels are damaged, contact the authorized service centre for replacement.
- Be careful when you remove the door from the appliance, the door is heavy.
- Clean and dry the appliance, its cavity, and accessories after each use to prevent steam condensation, corrosion, and surface deterioration.
- Check the product regularly for signs of deterioration that may make it unsuitable for food contact, such as cracks, blisters, delamination, shrinkage, stickiness, corrosion, or other visible changes in texture or appearance. Follow cleaning and care instructions to prevent deterioration.
- Use a microfibre cloth, warm water, and neutral detergents for cleaning the appliance and accessories. Do not use abrasive products, pads, solvents, sharp-edged or metal objects.
- Follow safety instructions on packaging when using an oven spray.

## 2.5 Steam Cooking

**⚠ WARNING!**

Risk of burns and damage to the appliance.

- Released Steam can cause burns:
  - Be careful when you open the appliance door when the function is activated. Steam can release.
  - Open the appliance door with care after the steam cooking operation.

## 2.6 Internal lighting

**⚠ WARNING!**

Risk of electric shock.

- Concerning the lamp(s) inside this product and spare part lamps sold separately: These lamps are intended to withstand extreme physical conditions in household appliances, such as temperature, vibration, humidity, or are intended to signal information about the operational status of the appliance. They are not intended to be used in other applications and are not suitable for household room illumination.
- This product contains a light source of energy efficiency class G.
- Use only lamps with the same specifications.

## 2.7 Service

- To repair the appliance contact the Authorised Service Centre.
- Use original spare parts only.

## 2.8 Disposal

**⚠ WARNING!**

Risk of injury or suffocation.

- Contact your municipal authority for information on how to dispose of the appliance.
- Disconnect the appliance from the mains supply.
- Cut off the mains electrical cable close to the appliance and dispose of it.

# 3. PRODUCT DESCRIPTION

## 3.1 General overview

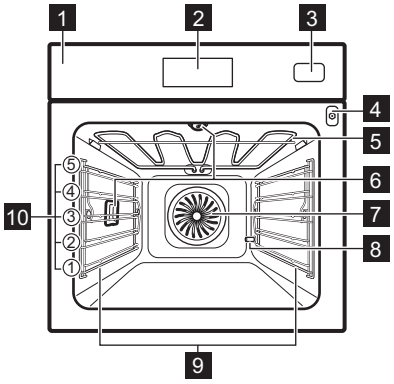


1 Control panel
2 Display
3 Water tank
4 Socket for the food sensor
5 Heating element
6 Lamp
7 Fan
8 Descaling pipe outlet
9 Shelf support, removable
10 Shelf positions

## 3.2 Accessories

- **Wire shelf**
  For cake tins, ovenproof dishes, roast dishes, cookware / dishes.
- **Baking tray**
  For moist cakes, baked items, bread, large roasts, frozen meals and to catch dripping liquids, e.g. fat when roasting food on wire shelf.
- **Grill- / Roasting pan**
  To bake and roast or as pan to collect fat.
- **Food Sensor**
  To control cooking based on the temperature inside the food.

- **Steam set**
  One unperforated and one perforated food container. The steam set drains the condensing water away from the food during steam cooking. Use it to prepare vegetables, fish, chicken breast. The set is not suitable for food that needs to soak in the water e.g. rice, polenta, pasta.

# 4. CONTROL PANEL

## 4.1 Control panel overview

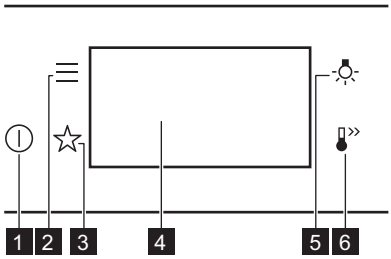


| | | |
|---|---|---|
| 1 | ON / OFF | Press and hold to turn the appliance on and off. |
| 2 | Menu | Lists the appliance options and setting functions. |
| 3 | Favourites | Lists the favourite settings. |
| 4 | Display | Shows the current settings of the appliance. |
| 5 | Lamp switch | To turn the lamp on and off. |
| 6 | Fast Heat Up | To turn on and off the function: Fast Heat Up. |

## 4.2 Display

Display with key functions set.

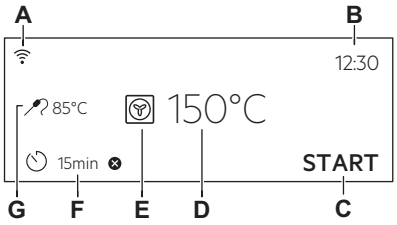


**A.** Wi-Fi
**B.** Time of Day
**C.** START / STOP
**D.** Temperature
**E.** Heating functions
**F.** Timer
**G.** Food Sensor (selected models only)

| Display indicators | |
|---|---|
| OK | To confirm the selection / setting. |
| 〈 | To go one level back in the menu. |
| | To undo the last action. |
| | To turn the options on and off. |
| | The sound alarm function is activated. |
| STOP | The sound alarm and stop cooking function is activated. |
| | Pop up message only is activated. |
| | Delayed start function is activated. |
| | To cancel the setting. |
| | Wi-Fi connection is turned on. |
| | Remote Operation is turned on. |

# 5. BEFORE FIRST USE

**⚠ WARNING!**

Refer to Safety chapters.

## 5.1 First connection

The display shows welcome message after the first connection.

You have to set: Language, Display Brightness, Key Tones, Buzzer Volume, Water Hardness, Time of Day.

## 5.2 Wireless connection

To connect the appliance you need:
- Wireless network with the Internet connection.
- Mobile device connected to the same wireless network.

1. To download the app scan the QR code located on the back cover of the user manual. You can also download the app directly from the app store.
2. Follow the app onboarding instructions.
3. Turn on the appliance.
4. Press ☰. Select: Settings / Connections.
5. ⏻ - slide or press to turn on or off: Wi-Fi.

The appliance wireless module starts within 90 sec.

ⓘ

For safety reasons, remote operation turns off automatically after 24 h. Repeat the onboarding, if needed.

| | |
|---|---|
| Frequency | 2.4 GHz WLAN |
| | 2400 - 2483.5 MHz |
| Protocol | IEEE 802.11b DSSS, 802.11g/n OFDM |
| Max Power | EIRP < 20 dBm (100 mW ) |
| Wi-Fi module | NIUS-50 |

## 5.3 Software licences

The software in this product contains components that are based on free and open source software. Electrolux acknowledges the contributions of the open software and robotics communities to the development project.

To access the source code of these free and open source software components whose license conditions require publishing, and to see their full copyright information and applicable license terms, visit: http://electrolux.opensoftwarerepository.com (folder NIUS).

## 5.4 Initial preheating and cleaning

Preheat the empty appliance before the first use and contact with food. The appliance can emit unpleasant smell and smoke. Ventilate the room during preheating.

1. Remove all accessories and removable shelf supports from the appliance.
2. Set the function ▭. Set the maximum temperature. Let the appliance operate for 1 h.
3. Set the function ▭. Set the maximum temperature. Let the appliance operate for 15 min.
4. Set the function ⊛. Set the maximum temperature. Let the appliance operate for 15 min.
5. Turn off the appliance and wait until it is cold.
6. Clean the appliance and the accessories only with a microfibre cloth, warm water and a mild detergent.
7. Put the accessories and removable shelf supports back to their initial position.

## 5.5 Setting: Water Hardness

When you connect the appliance to the mains you have to set the water hardness level.

Use the test paper or contact your water supplier to check the water hardness level.

1. Put the test paper into the tap water for about 1 sec. Do not put the test paper under running water.
2. Shake the test paper to remove any remaining water.

3. After 1 min, check water hardness with the table below.
4. Set the water hardness level: Menu / Settings / Setup / Water Hardness.

The colours of the test paper continue to change. Check the water hardness within 1 min after testing.

You can change the water hardness level in the menu: Settings / Setup / Water Hardness.

The table shows water hardness range with the corresponding level of water classification. Adjust the water hardness level according to the table.

| Water hardness level | Test paper |
|---|---|
| **1** - soft | 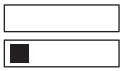 |
| **2** - moderately hard |  |
| **3** - hard |  |
| **4** - very hard |  |

# **6.** DAILY USE

**⚠ WARNING!**

Refer to Safety chapters.

## 6.1 Heating functions

### STANDARD

**Grill**
To grill thin pieces of food and to toast bread.

**Turbo Grilling**
To roast large meat joints or poultry with bones on one shelf position. To bake gratins and to brown.

**True Fan Cooking**
To roast meat and bake cakes. Set a lower temperature than for Conventional Cooking as the fan distributes heat evenly in the oven interior.

**Frozen Foods**
Perfect for ready meals (e.g. french fries, croquettes or spring rolls).

**Conventional Cooking**
To bake and roast food on one shelf position.

**Pizza Function**
Best for baking pizza and other dishes that require more heat from below.

**Bottom Heat**
Choose this function after a cooking process to brown the food more on the bottom if needed. Use the lowest shelf level.

ⓘ

The lamp may turn off automatically at a temperature below 80 °C during some heating functions.

### SPECIALS

**Preserving**
To preserve vegetables and fruits, place canning jars in a baking tray filled with water, using heat-resistant jars with bayonet or screw caps of the same size. Use the lowest shelf position.

**Dehydrating**
To dry sliced fruit, vegetables and mushrooms. To allow the moisture-saturated air to escape and the fruit to dry better, it is advisable to open the oven door occasionally during the drying process.

**Plate Warming**
To preheat plates for serving.

**Defrost**
To defrost food (vegetables and fruit). The defrosting time depends on the amount and size of the frozen food.

**Au Gratin**
For dishes such as lasagna or potato gratin. To bake gratins and to brown.

**Slow Cooking**
Low temperature cooking process. It's perfect to cook delicate food (e.g., beef, veal or lamb).

| | |
|---|---|
| | **Keep Warm**<br>To keep food warm. Please note that some dishes may continue to cook and dry out while being kept warm. Cover the dishes if necessary. |
| | **Moist Fan Baking**<br>This function is designed to save energy during cooking. When you use this function, the temperature inside the appliance may differ from the set temperature. The residual heat is used. The heating power may be reduced. For more information refer to "Daily Use" chapter, Notes on: Moist Fan Baking. |

STEAM

| | |
|---|---|
| | **Steamify**<br>Use steam for steaming, stewing, gentle crisping, baking and roasting. |
| | **Steam Regenerating**<br>Food reheating with steam prevents surface drying. Heat is distributed in a gentle and even way, which allows to recover taste and aroma of food as just prepared. This function can be used to reheat food directly on a plate. You can reheat more than one plate at the same time, using different shelf positions. |
| | **Bread Baking**<br>Use this function to prepare bread and bread rolls with professional-like result in terms of crispiness, colour and crust gloss. |
| | **Dough Proving**<br>To speed up the rising of the yeast dough. Cover the surface of the dough to prevent from drying. |
| FULL | **Full Steam**<br>For steaming vegetables, side dishes or fish. |
| HIGH | **Humidity High**<br>The function is suitable for cooking delicate dishes like custards, flans, terrines and fish. |
| LOW | **Humidity Low**<br>The function is suitable for meat, poultry, oven dishes and casseroles. Thanks to the combination of steam and heat, the meat gets a juicy and tender texture along with a crusty surface. |

## 6.2 Notes on: Moist Fan Baking

This function was used to comply with the energy efficiency class and ecodesign requirements (according to EU 65/2014 and EU 66/2014). Tests according to: IEC/EN 60350-1.

The oven door should be closed during cooking so that the function is not interrupted and the oven operates with the highest energy efficiency possible.

When you use this function the lamp automatically turns off after 30 sec.

For the cooking instructions refer to "Hints and tips" chapter, Moist Fan Baking. For general energy saving recommendations refer to "Energy Efficiency" chapter, Energy saving tips.

## 6.3 Setting: Heating functions

1. Turn on the appliance. The display shows the default heating function and the temperature.
2. Press the symbol of the heating function to enter the submenu.
3. Select the heating function and press OK.
4. Set the temperature. Press OK.
5. Press START.

Food Sensor - you can plug the sensor at any time before or during cooking. Refer to "Using the accessories, Food sensor" chapter.

6. STOP - press to turn off the heating function.
7. Turn off the appliance.

## 6.4 Setting: Steamify - Steam heating function

1. Turn on the appliance. Select the symbol of the heating function and press it to enter the submenu.
2. Press . Set the steam heating function.
3. Press OK. The display shows the temperature settings.
4. Set the temperature. Type of the steam heating function depends on the set temperature:
   a. **Steam for Steaming** 50 - 100 °C - for steaming vegetables, grains,

legumes, seafood, terrines and spoon desserts.

b. **Steam for Stewing** 105 - 130 °C - for cooking stewed and braised meat or fish, bread and poultry, as well as cheesecakes and casseroles.

c. **Steam for Gentle Crisping** 135 - 150 °C - for meat, casseroles, stuffed vegetables, fish and gratin. Owing to the combination of steam and heat the meat gets a juicy and tender texture along with a crusty surface. If you set the timer, grill function turns on automatically in the last minutes of the cooking process to give dish a gentle gratin.

d. **Steam for Baking and Roasting** 155 - 230 °C - for roasted and baked dishes meat, fish, poultry, filled puff pastry, tarts, muffins, gratin, vegetables and bakery dishes. If you set the timer and put the food on the first level, bottom heat function turns on automatically in the last minutes of the cooking process to give dish a crispy bottom.

5. Press OK.
6. Press the cover of the water tank to open it.
7. Fill the water tank with cold water to the maximum level (around 950 ml) until the signal sounds or the display shows the message. The water supply is sufficient for approximately 50 min. Do not fill the water tank over its maximum capacity. There is a risk of water leakage, overflow and furniture damage.

> ⚠ **WARNING!**
>
> Use only cold tap water. Do not use filtered (demineralised) or distilled water. Do not use other liquids. Do not pour flammable or alcoholic liquids into the water tank.

8. Push the water tank to its initial position.
9. Press START .

Steam appears after approximately 2 min. When the appliance reaches the set temperature, the signal sounds.

10. When the water tank runs out of water, the signal sounds. Refill the water tank.
11. Turn off the appliance.
12. Empty the water tank after each steam cooking to prevent limestone residue.

Refer to "Care and Cleaning" chapter, Tank emptying.

13. After cooking, carefully open the oven door. Residual water can condensate in the oven interior.
14. When the appliance is cold, dry the oven interior with a soft cloth.

> ⚠ **WARNING!**
>
> The appliance is hot. There is a risk of burns. Be careful when you empty the water tank.

## 6.5 Menu

Press ☰ to enter the menu.

| Menu item | | Application |
|---|---|---|
| Assisted Cooking | | Lists automatic programmes. |
| Cleaning | | Lists cleaning programmes. |
| Favourites | | Lists the favourite settings. |
| Options | | To set the appliance configuration. |
| Settings | Connections | To set the network configuration. |
| | Setup | To set the appliance configuration. |
| | Service | Shows the software version and configuration. |

### Submenu for: Cleaning

| Submenu | Application |
|---|---|
| Drying | Procedure for drying the cavity from the condensation remaining after a use of the steam functions. |
| Tank emptying | Procedure for removing the residual water from the water tank after use of the steam functions. |
| Steam Cleaning | Light cleaning. |

| Submenu | Application |
|---|---|
| Steam Cleaning Plus | Thorough cleaning. |
| Descaling | Cleaning of the steam generation circuit from residual limestone. |
| Rinsing | Procedure for rinsing and cleaning the steam generation circuit after frequent use of the steam functions. |

### Submenu for: Options

| Submenu | Application |
|---|---|
| Light | Turns the lamp on and off. |
| Child Lock | Prevents accidental activation of the appliance. |
| Fast Heat Up | Shortens the heat up time. It is available only for some of the heating functions. |
| Cleaning Reminder | Turns the reminder on and off. |
| Digital Clock Style | Changes the format of the displayed time indication. |

### Submenu for: Connections

| Submenu | Description |
|---|---|
| Wi-Fi | To enable and disable: Wi-Fi. |
| Remote Operation | To enable and disable remote operation.<br>Option visible only after you turn on: Wi-Fi. |
| Auto Remote Operation | To start remote operation automatically after pressing START.<br>Option visible only after you turn on: Wi-Fi. |
| Network | To check network status and the signal power of: Wi-Fi. |
| Forget Network | To disable current network from auto connection with the appliance. |

### Submenu for: Setup

| Submenu | Description |
|---|---|
| Language | Sets the appliance language. |
| Display Brightness | Sets the display brightness. |
| Key Tones | Turns the tone of the touch fields on and off. It is not possible to mute the tone for ⏻. |
| Buzzer Volume | Sets the volume of key tones and signals. |
| Water Hardness | Sets the water hardness. |
| Time of Day | Sets the current time and date. |

### Submenu for: Service

| Submenu | Description |
|---|---|
| Demo Mode | Activation / deactivation code: 2468 |
| Software Version | Information about software version. |
| Reset All Settings | Restores factory settings. |

## 6.6 Setting: Assisted Cooking

Assisted Cooking submenu consists of a set of additional functions and programs that are designed for dedicated dishes. Each dish in this submenu is provided with a suitable setting. You can adjust the time and the temperature during cooking.

For some of the dishes you can also cook with Food Sensor. The degree to which a dish is cooked:

- Rare
- Medium
- Well Done

For some of the dishes you can also cook with Weight Automatic.

1. Turn on the appliance.
2. Press ☰.
3. Press 🔧. Enter Assisted Cooking.
4. Choose a dish or a food type.
5. Place the food inside the appliance and press START .

When the function ends, check if the food is ready. Extend the cooking time, if needed.

# 7. ADDITIONAL FUNCTIONS

## 7.1 Favourites ☆

You can save up to 3 of your favourite settings, such as heating function and cooking time.

1. Turn on the appliance.
2. Select the preferred setting.
3. Press ☰.
4. Select: Favourites / Save current settings.
5. Press **+** to add the setting to the list of: Favourites.
6. Press OK.

↩ - press to reset the setting.

⊗ - press to cancel the setting.

## 7.2 Function lock

This function prevents an accidental change of the appliance function.

1. Turn on the appliance.
2. Set a heating function.
3. ☆, 🌡 - press at the same time to turn on the function.

☆, 🌡 - press at the same time to turn off the function.

## 7.3 Child Lock

This function prevents accidental activation of the appliance.

1. Turn on the appliance.
2. Press ☰.
3. Select Options / Child Lock.
4. Press the code letters in an alphabetical order.

Child Lock is activated.
When this function is activated, access to: Timer, Wi-Fi and lamp is available.

To enable the use of the appliance, press the code letters in an alphabetical order.

## 7.4 Automatic switch-off

For safety reasons, if the heating function is active and no settings are changed, the appliance will turn off automatically after a certain period of time.

| (°C) | (h) |
|---|---|
| 30 - 115 | 12.5 |
| 120 - 195 | 8.5 |
| 200 - 230 | 5.5 |

If you intend to run a heating function for a duration exceeding the automatic switch-off time, set the cooking time. Refer to the 'Clock functions' chapter.

The Automatic switch-off does not work with the functions: Light, Food Sensor, End time.

## 7.5 Cooling fan

When the appliance operates, the cooling fan turns on automatically to keep the surfaces of the appliance cool. If you turn off the appliance, the cooling fan can continue to operate until the appliance cools down.

# 8. CLOCK FUNCTIONS

## 8.1 Clock functions description

| Function | Description |
|---|---|
| Timer | To set the length of cooking. Maximum is 23 h 59 min.<br>You can set what happens when the time is up by setting the preferred: End Action. |

| Function | Description |
|---|---|
| End Action | Sound Alarm - when the time is up the signal sounds. You can set this function at any time, even when the appliance is turned off. |
| | Sound Alarm and stop cooking - when the time is up the signal sounds and the heating function turns off. |
| | Pop up message only - when the time is up the message appears on the display. You can set this function at any time, even when the appliance is turned off. |
| Delayed start | To postpone the start and / or end of cooking. |
| Time Extension | To extend the cooking time. |
| Uptimer | To show how long the appliance operates. Maximum is 23 h 59 min. You can turn the function on and off. This function has no effect on the operation of the appliance. |

### 8.2 Setting: Time of Day

1. Turn on the appliance.
2. Press: Time of Day.
3. Set the time.
4. Press OK.

### 8.3 Setting: Timer

1. Choose the heating function and set the temperature.
2. Press ⏲.
3. Set the time.

You can select the preferred End action by pressing • • •.

4. Press OK. Repeat the action until the display shows the main screen.

When 10% of cooking time is left and the food does not seem to be ready, you can extend cooking time. You can also change the heating function. Press **+1min** to extend the cooking time.

### 8.4 Setting: Delayed start

1. Set the heating function and the temperature.
2. Press ⏲.
3. Set the cooking time.
4. Press • • •.
5. Press: Delayed start.
6. Choose the desired start time.
7. Press OK. Repeat the action until the display shows the main screen.

### 8.5 Setting: Uptimer

1. Press ⏲.
2. Press • • •.
3. Press: Uptimer.
4. Slide or press to show the running time on the main screen.
5. Press OK. Repeat the action until the display shows the main screen.

### 8.6 Changing timer settings

You can change the set time during cooking at any time.

1. Press ⏲.
2. Set the timer value.
3. Press OK.

## 9. USING THE ACCESSORIES

⚠ **WARNING!**

Refer to Safety chapters.

### 9.1 Inserting accessories

A small indentation at the top increases safety and provides tilt protection. The indentations are also anti-tip devices. The rim around the shelf prevents cookware from slipping off the shelf.

**Wire shelf**

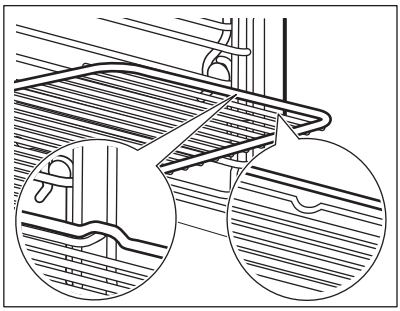

Insert the shelf between the guide bars of the shelf support. Make sure that the shelf touches the back of the oven interior.

**Baking tray / Deep pan**

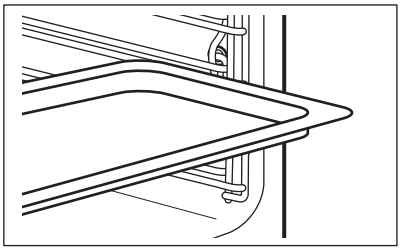

Push the tray between the guide bars of the shelf support. Place the baking tray with the slope towards the back of the oven interior.

## 9.2 Food Sensor

It measures the temperature inside the food. You can use it with every heating function.

There are two temperatures to be set:

- °C - the temperature inside the appliance. It should be at least 25 °C higher than the food core temperature.
- - the food core temperature.

For the best cooking results:

- Ingredients should be at room temperature.
- Do not use it for liquid dishes.
- During cooking the needle of the food sensor must be fully inserted in the dish.

The appliance calculates an approximate end of cooking time. It depends on the quantity of food, the heating function and the temperature.

### Cooking with: Food Sensor

**⚠ WARNING!**

There is a risk of burns as Food Sensor and shelf supports become hot. Do not touch Food Sensor handle with bare hands. Always use oven gloves.

1. Turn on the appliance.
2. Set a heating function and, if necessary, the oven temperature.
3. Insert Food Sensor inside the dish:
   **Meat, poultry and fish**
   Insert the entire needle of the Food Sensor into the meat or fish at its thickest part.

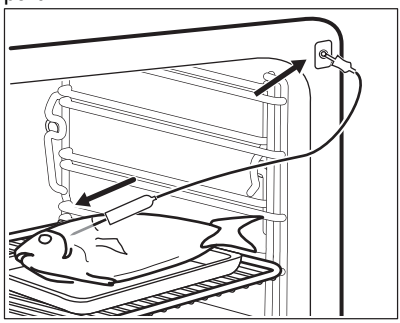

   **Casserole**
   Insert the tip of Food Sensor exactly in the centre of the casserole. Food Sensor should be stabilized in one place during cooking. Use a solid ingredient to achieve that. Use the rim of the baking dish to support the silicone handle of Food Sensor. The tip of Food Sensor should not touch the bottom of a baking dish.

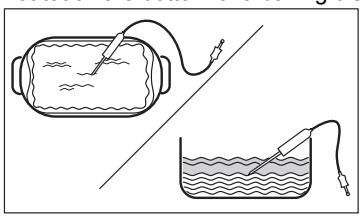

4. Plug Food Sensor into the socket located inside the appliance. Refer to "Product description" chapter.

The display shows the current temperature of Food Sensor.

5. - press to set the core temperature of the sensor.
6. - press to set the preferred option:
   - Sound Alarm - when food reaches the core temperature, the signal sounds.
   - Sound Alarm and stop cooking - when food reaches the core temperature, the signal sounds and the cooking stops.
7. Select the option and repeatedly press OK to go to main screen.
8. Press START .
9. When the food reaches the set temperature, the signal sounds. Check if the food is ready. Extend the cooking time, if needed.
10. Remove Food Sensor plug from the socket and remove the dish from the appliance.

# 10. HINTS AND TIPS

## 10.1 Cooking recommendations

The temperature and cooking times in the tables are for guidance only. They depend on the recipes, quality and quantity of the ingredients used.

Your appliance may bake or roast differently than your previous appliance. The hints below show recommended settings for temperature, cooking time and shelf position for specific types of the food.

Count the shelf positions from the bottom of the oven floor.

If you cannot find the settings for a specific recipe, look for a similar one.

For energy saving tips refer to "Energy efficiency" chapter.

For more cooking recommendations refer to the cooking tables available on our website. To find the Cooking Hints, check the PNC number on the rating plate located on the front frame inside the appliance.

**Symbols used in the tables:**

| | |
|---|---|
| | Food type |
| | Heating function |
| °C | Temperature |
| | Accessory |
| | Container (Gastronorm) |
| | Weight (kg) |
| | Shelf position |
| | Cooking time (min) |

## 10.2 Moist Fan Baking - recommended accessories

Use dark and non-reflective tins and containers. They have better heat absorption than light colour and reflective dishes.

- **Pizza pan** - dark, non-reflective, diameter 28cm
- **Baking dish** - dark, non-reflective, diameter 26cm
- **Ramekins** - ceramic, diameter 8cm, height 5 cm
- **Flan base tin** - dark, non-reflective, diameter 28cm

## 10.3 Moist Fan Baking

For the best results follow suggestions listed in the table below.

| | | °C | | |
|---|---|---|---|---|
| Sweet rolls, 16 pieces | baking tray or dripping pan | 180 | 2 | 25 - 35 |
| Swiss Roll | baking tray or dripping pan | 180 | 2 | 15 - 25 |
| Whole fish, 0.2 kg | baking tray or dripping pan | 180 | 3 | 15 - 25 |
| Cookies, 16 pieces | baking tray or dripping pan | 180 | 2 | 20 - 30 |
| Macaroons, 24 pieces | baking tray or dripping pan | 160 | 2 | 25 - 35 |
| Muffins, 12 pieces | baking tray or dripping pan | 180 | 2 | 20 - 30 |
| Savory pastry, 20 pieces | baking tray or dripping pan | 180 | 2 | 20 - 30 |
| Short crust biscuits, 20 pieces | baking tray or dripping pan | 140 | 2 | 15 - 25 |
| Tartlets, 8 pieces | baking tray or dripping pan | 180 | 2 | 15 - 25 |

## 10.4 Information for test institutes

Tests according to: EN 60350-1, IEC 60350-1.

**Baking on one level**

| | | | °C | | |
|---|---|---|---|---|---|
| Fatless sponge cake | True Fan Cooking | Wire shelf | 160 | 45 - 60 | 2 |
| Fatless sponge cake | Conventional Cooking | Wire shelf | 160 | 45 - 60 | 2 |
| Apple pie, 2 tins Ø20 cm | True Fan Cooking | Wire shelf | 160 | 55 - 65 | 2 |
| Apple pie, 2 tins Ø20 cm | Conventional Cooking | Wire shelf | 180 | 55 - 65 | 1 |
| Short bread | True Fan Cooking | Baking tray | 140 | 25 - 35 | 2 |
| Short bread | Conventional Cooking | Baking tray | 140 | 25 - 35 | 2 |
| Small cakes, 20 per tray **1)** | True Fan Cooking | Baking tray | 150 | 20 - 30 | 3 |
| Small cakes, 20 per tray **1)** | Conventional Cooking | Baking tray | 170 | 20 - 30 | 3 |
| Toast **2)** | Grill | Wire shelf | max. | 1 - 2 | 5 |

**1)** Preheat the empty appliance.

**2)** Preheat the empty appliance for 5 min.

**Multilevel baking**

| | | | °C | | |
|---|---|---|---|---|---|
| Short bread | True Fan Cooking | Baking tray | 140 | 25 - 45 | 2 and 4 |

| | | | °C | | |
|---|---|---|---|---|---|
| Small cakes, 20 per tray[1)] | True Fan Cooking | Baking tray | 150 | 25 - 35 | 2 and 4 |
| Fatless sponge cake | True Fan Cooking | Wire shelf[2)] | 160 | 45 - 55 | 2 and 4 |
| Apple pie | True Fan Cooking | Wire shelf[2)] | 160 | 55 - 65 | 2 and 4 |

1) Preheat the empty appliance.

2) 1 cake tin on each wire shelf. One positioned to the left and one to the right.

### 10.5 Information for test institutes

Tests for the function: Full Steam

Tests according to IEC 60350-1.

Set the temperature to 100°C.

| | | | | |
|---|---|---|---|---|
| Broccoli[1) 2)] | 2/3 Steam set perforated | 0.3 | 3 | 8 - 9 |
| Broccoli[1) 2)] | 2/3 Steam set perforated | max. | 3 | 10 - 11 |
| Peas, frozen[2)] | 2 x 2/3 Steam set perforated | 2 x 1.5 | 2 and 4 | Until the temperature in the coldest spot reaches 85 °C. |

1) Preheat the empty appliance.

2) Put the baking tray on the first shelf position.

## 11. CARE AND CLEANING

**⚠ WARNING!**

Refer to Safety chapters.

### 11.1 Notes on cleaning

**Cleaning Agents**

- Clean the front of the appliance only with a microfibre cloth with warm water and a mild detergent.
- Use a cleaning solution to clean metal surfaces.
- Clean stains with a mild detergent.

**Everyday Use**

- Clean the interior of the appliance after each use. Fat accumulation or other residue may cause fire.
- Do not store food in the appliance for longer than 20 minutes. Dry the interior of the appliance only with a microfibre cloth after each use.

**Accessories**

- Clean all accessories after each use and let them dry. Use only a microfibre cloth with warm water and a mild detergent. Do not clean the accessories in a dishwasher.
- Do not clean the non-stick accessories using abrasive cleaner or sharp-edged objects.

### 11.2 Removing the shelf supports

Remove the shelf supports to clean the appliance.

1. Turn off the appliance and wait until it is cold.
2. Carefully pull the shelf supports up and out of the front catch.
3. Pull the front end of the shelf support away from the side wall.
4. Pull the supports out of the rear catch.

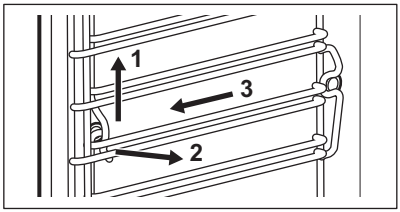


Install the shelf supports in the opposite sequence.

## 11.3 Steam Cleaning

1. Turn off the appliance and wait until it is cold.
2. Remove all accessories and removable shelf supports.
3. Clean the bottom of the oven interior and the inner door glass with a soft cloth with warm water and a mild detergent.
4. Fill the water tank to the maximum level until the signal sounds or the display shows the message.
5. Select: Menu / Cleaning.

| Option | Description |
|---|---|
| Steam Cleaning | Light cleaning<br>**Duration:** 30 min |
| Steam Cleaning Plus | Normal cleaning<br>Spray the cavity with a detergent.<br>**Duration:** 75 min |

6. Press START . Follow the instruction on the display.

The signal sounds when the cleaning ends.

7. Press any symbol to turn off the signal.
8. Turn off the appliance.
9. When the appliance is cold, dry the cavity with a soft cloth.
10. Leave the oven door open and wait until the oven interior is dry.

ⓘ

When this function works, the lamp is off.

## 11.4 Cleaning Reminder

When the reminder appears, cleaning is recommended.

Use the function: Steam Cleaning Plus.

## 11.5 Descaling

Use it to descale the steam system.

1. Turn off the appliance and wait until it is cold.
2. Remove all accessories.
3. Make sure that the water tank is empty. Refer to "Care and cleaning" chapter, Tank emptying.
   **Duration of the first part:** around 100 min
4. Select: Menu / Cleaning / Descaling.
5. Place the grill- / roasting pan on the first shelf position.
6. Pour 250 ml of the descaling agent in the water tank.
7. Fill the remaining part of the water tank with 700 ml of water, until the signal sounds or the display shows the message.
8. Turn on the function and follow the instruction on the display. The first part of descaling starts.
   **Duration of the second part:** around 35 min
9. Fill the water tank with 950 ml of water, until the signal sounds or the display shows the message.
10. When the function ends, remove the grill- / roasting pan.
11. Turn off the appliance and wait until it is cold.
12. Clean the oven interior with a soft cloth.
13. Leave the oven door open and wait until the cavity is dry.

If some limestone residue remains in the appliance after descaling, the display prompts to repeat the procedure.

## 11.6 Descaling reminder

There are two reminders which prompt you to descale the appliance. You cannot disable the descaling reminder.

- Soft reminder - recommends you to descale the appliance.
- Hard reminder - obligates you to descale the appliance. If you do not descale the appliance when the hard reminder is on, the steam functions are disabled.

## 11.7 Rinsing

Use it to clean the steam system after frequent use of the steam functions.

1. Turn off the appliance and wait until it is cold.
2. Remove all accessories.
3. Place the deep pan on the first shelf position.
4. Fill the water tank with water to the maximum level until the signal sounds or the display shows the message.
5. Select: Menu / Cleaning / Rinsing.

**Duration:** around 30 min

6. Turn on the function and follow the instruction on the display.
7. When the function ends, remove the deep pan.

ⓘ

When this function works, the lamp is off.

## 11.8 Drying

Use it after cooking with a steam heating function or steam cleaning to dry the cavity.

1. Turn off the appliance and wait until it is cold.
2. Remove all accessories.
3. Select: Menu / Cleaning / Drying.
4. Follow the instruction on the display.

## 11.9 Drying reminder

After cooking with a steam heating function the display prompts to dry the appliance.

Press YES to dry the appliance.

## 11.10 Tank emptying

Use it after cooking with steam heating function to remove the residual water from the water tank.

1. Turn off the appliance and wait until it is cold.
2. Remove all accessories.
3. Place the deep pan on the first shelf position.
4. Select: Menu / Cleaning / Tank emptying.

**Duration:** 6 min

5. Turn on the function and follow the instruction on the display.
6. When the function ends, remove the deep pan.

ⓘ

When this function works, the lamp is off.

## 11.11 Removing and installing door

You can remove the door and the internal glass panels to clean it. The number of glass panels is different for different models.

⚠ **WARNING!**

The door is heavy.

⚠ **CAUTION!**

Carefully handle the glass, especially around the edges of the front panel. The glass can break.

1. Make sure the appliance is cold.
2. Fully open the door.
3. Press the clamping levers **A** on the two door hinges.

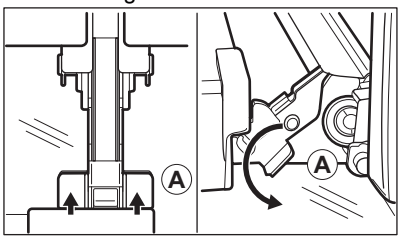


4. Close the oven door to the first opening position (at approximate angle: 70°).
5. Hold the door with one hand on each side and pull it away from the oven at an upwards angle.
6. Put the door with the outer side down on a soft cloth on a stable surface.
7. Hold the door trim **B** on the top edge of the door at the two sides and push inwards to release the clip seal.

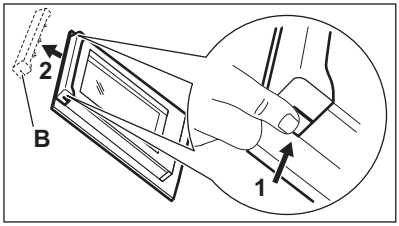


8. Pull the door trim to the front to remove it.
9. Hold the door glass panels on their top edge one by one and pull them up out of the guide.

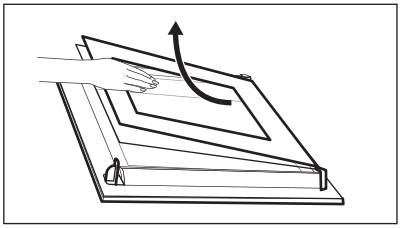

10. Clean the glass panel with water and soap. Dry the glass panel carefully. Do not clean the glass panels in the dishwasher.

After cleaning, do the above steps in the opposite sequence. Install the smaller panel first, then the larger and the door.

Make sure that the glass panels are inserted in the correct position otherwise the surface of the door may overheat.

### 11.12 Replacing the lamp

**⚠ WARNING!**

Risk of electric shock.
The lamp can be hot.

1. Turn off the appliance and wait until it is cold.
2. Disconnect the appliance from the mains.
3. Place the cloth on the oven floor.

#### Top lamp

1. Turn the glass cover to remove it.

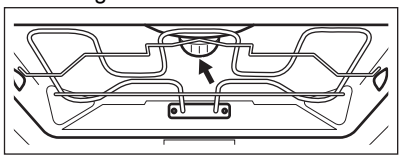

2. Remove the metal ring and clean the glass cover.
3. Replace the lamp with a suitable 300 °C heat-resistant lamp.
4. Attach the metal ring to the glass cover and install it.

#### Side lamp

1. Remove the left shelf support to get access to the lamp.
2. Use a Torx 20 screwdriver to remove the cover.
3. Clean the glass cover.
4. Replace the lamp with a suitable 300 °C heat-resistant lamp.
5. Install the metal frame and the seal. Tighten the screws.
6. Install the left shelf support.

## 12. TROUBLESHOOTING

**⚠ WARNING!**

Refer to Safety chapters.

### 12.1 What to do if...

| Problem description | Cause and remedy |
|---|---|
| You cannot activate or operate the appliance. | The appliance is not connected to an electrical supply or it is connected incorrectly. |

| Problem description | Cause and remedy |
|---|---|
| The appliance does not heat up. | The clock is not set.<br>To set the clock refer to "Clock functions" chapter. |
| | The door is not closed correctly.<br>Lamps / symbols for the hob |
| | The fuse is blown.<br>Make sure the fuse is the cause of the problem. If the problem recurs, contact a qualified electrician. |
| | Child Lock is activated. |
| The lamp is turned off. | The lamp is burnt out. Replace the lamp.<br>For details refer to "Care and Cleaning" chapter. |
| ⓘ Power cut always stops cleaning. Repeat cleaning if it's interrupted by power failure. | |
| Trouble with wireless network signal. | Check if your mobile device is connected to the wireless network. Check your wireless network and router.<br>Restart the router. |
| New router installed or router configuration changed. | To configure appliance and mobile device again, refer to "Before first use" chapter, Wireless connection. |
| The wireless network signal is weak. | Move router as close to the appliance as possible. |
| The wireless signal is disrupted by microwave oven placed near the appliance. | Turn off the microwave oven.<br>Avoid using microwave oven and the Remote operation of the appliance at the same time. Microwaves disrupt WiFi signal. |

## 12.2 Error codes

When the software error occurs, the display shows error message. You will find the list of problems in the table below.

| Code and description | Remedy |
|---|---|
| **F111** - Food Sensor is not correctly inserted into the socket. | Fully plug Food Sensor into the socket. |
| **F240, F439** - the touch fields on the display do not work properly. | Clean the surface of the display. Make sure there is no dirt on the touch fields. |
| **F601** - there is a problem with Wi-Fi signal. | Check your network connection. Refer to "Before first use" chapter, Wireless connection. |
| **F604** - the first connection to Wi-Fi failed. | Turn the appliance off and on and try again. Refer to "Before first use" chapter, Wireless connection. |
| **F908** - the appliance system cannot connect with the control panel. | Turn the appliance off and on. |
| **F602, F603** - Wi-Fi is not available. **1)** | Turn the appliance off and on. |

**1)** When the following error message continues to appear on the display, it means a faulty subsystem may have been disabled. In such a case contact your dealer or an Authorized Service Centre. If one of these errors occurs, the rest of the appliance functions will continue to work as usual.

### 12.3 Service data

If you cannot find a solution to the problem yourself, contact your dealer or an Authorised Service Centre.

The necessary data for the service centre is on the rating plate. The rating plate is located on the front frame of the appliance. It is visible when you open the door. Do not remove the rating plate from the appliance.

**We recommend that you write the data here:**

| |
|---|
| Model (MOD.) : |
| Product number (PNC): |
| Serial number (S.N.): |

## 13. ENERGY EFFICIENCY

### 13.1 Product Information Sheet and Product Information according to EU Energy Labelling and Ecodesign Regulations

| | | |
|---|---|---|
| Supplier's name | Electrolux | |
| Model identification | COB8S09WX 944032134<br>EOB8S09WX 944032132<br>LOB8S09WX 944032133 | |
| Energy Efficiency Index | 61.9 | |
| Energy efficiency class | A++ | |
| Energy consumption with a standard load, conventional mode | 1.09 kWh/cycle | |
| Energy consumption with a standard load, fan-forced mode | 0.52 kWh/cycle | |
| Number of cavities | 1 | |
| Heat source | Electricity | |
| Volume | 70 l | |
| Type of oven | Built-In Oven | |
| Mass | COB8S09WX | 34.5 kg |
| | EOB8S09WX | 34.5 kg |
| | LOB8S09WX | 34.5 kg |

IEC/EN 60350-1 - Household electric cooking appliances - Part 1: Ranges, ovens, steam ovens and grills - Methods for measuring performance.

### 13.2 Product Information for power consumption and maximum time to reach applicable low power mode

| | |
|---|---|
| Power consumption in standby | 0.8 W |
| Power consumption in network standby | 2.0 W |
| Maximum time needed for the equipment to automatically reach the applicable low power mode | 20 min |

For guidance on how to activate and deactivate the wireless network connection, refer to "Before first use" chapter.

### 13.3 Energy saving tips

Following tips below will help you save energy when using your appliance.

Make sure that the appliance door is closed when the appliance operates. Do not open the appliance door too often during cooking. Keep the door gasket clean and make sure it is well fixed in its position.

Use metal cookware and dark, non-reflective tins and containers to improve energy saving.

Do not preheat the appliance before cooking unless specifically recommended.

Keep breaks between baking as short as possible when you prepare a few dishes at one time.

**Cooking with fan**
When possible, use the cooking functions with fan to save energy.

**Residual heat**
When the cooking duration is longer than 30 min, reduce the appliance temperature to minimum 3 - 10 min before the end of cooking. The residual heat inside the appliance will continue to cook.

Use the residual heat to keep the food warm or warm up other dishes.

When you turn off the appliance, the display shows the residual heat.

If a programme with Duration is activated and the cooking time is longer than 30 min, the heating elements automatically turn off earlier in some appliance functions.

**Keep food warm**
Choose the lowest possible temperature setting to use residual heat and keep the food warm. The residual heat indicator or temperature appears on the display.

**Cooking with the lamp off**
Turn off the lamp during cooking. Turn it on only when you need it.

**Moist Fan Baking**
Function designed to save energy during cooking.

When you use this function the lamp automatically turns off after 30 sec. You may turn on the lamp again but this action will reduce the expected energy savings.

**Standby mode**
After 2 min the display switches to standby mode.

## **14.** ENVIRONMENTAL CONCERNS

Recycle materials with the symbol . Put the packaging in relevant containers to recycle it. Help protect the environment and human health by recycling waste of electrical and electronic appliances. Do not dispose of appliances marked with the symbol  with the household waste. Return the product to your local recycling facility or contact your municipal office.

electrolux.com

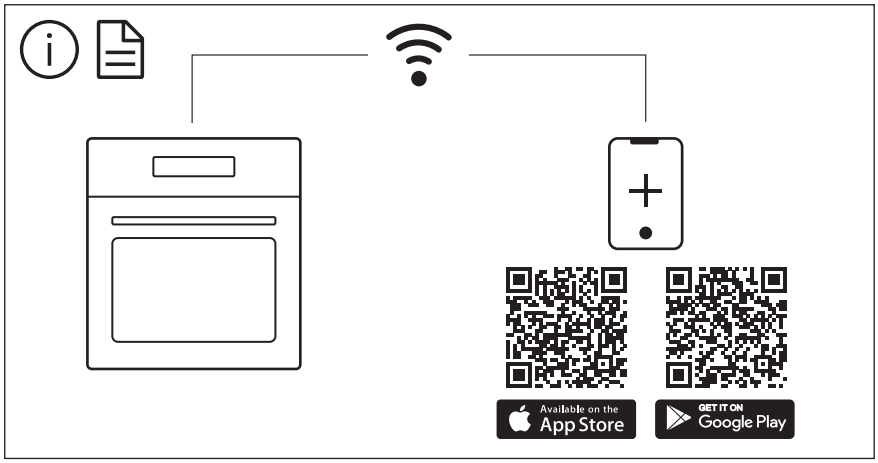


867380778-C-272026