User Manual

GETTING STARTED? EASY.



ZWF 0147NX

EN User Manual
Washing Machine

ZANUSSI

⚠ SAFETY INFORMATION

Before the installation and use of the appliance, carefully read the supplied instructions. The manufacturer is not responsible for any injuries or damages that are the result of incorrect installation or usage. Always keep the instructions in a safe and accessible location for future reference.

CHILDREN AND VULNERABLE PEOPLE SAFETY

- This appliance can be used by children aged from 8 years and above and persons with reduced physical, sensory or mental capabilities or lack of experience and knowledge if they have been given supervision or instruction concerning the use of the appliance in a safe way and understand the hazards involved.
- Children between 3 and 8 years of age and persons with very extensive and complex disabilities shall be kept away unless continuously supervised.
- Children of less than 3 years of age should be kept away unless continuously supervised.
- Do not let children play with the appliance.
- Keep all packaging away from children and dispose of it appropriately.
- Keep detergents away from children.
- Keep children and pets away from the appliance when the door is open.
- Children shall not carry out cleaning and user maintenance of the appliance without supervision.

GENERAL SAFETY

- Do not change the specification of this appliance.
- This appliance is intended to be used in household and similar applications such as:
  - staff kitchen areas in shops, offices and other working environments;
  - by clients in hotels, motels, bed & breakfast and other residential type environments;
  - areas for communal use in blocks of flats or in launderettes.

- Do not exceed the maximum load of 10 kg (refer to the "Programme chart" chapter).
- The operating water pressure at the water entry point from the outlet connection must be between 0.5 bar (0.05 MPa) and 8 bar (0.8 MPa).
- The ventilation opening in the base must not be covered by a carpet, mat, or any floor covering.
- The appliance must be connected to the water mains using the new supplied hose sets, or other new hose sets supplied by the Authorised Service Centre.
- Old hose sets must not be reused.
- If the mains power supply cable is damaged, it must be replaced by the manufacturer, its Authorised Service Centre or similarly qualified persons to avoid an electrical hazard.
- Before any maintenance operation, deactivate the appliance and disconnect the mains plug from the socket.
- Do not use high pressure water sprays and/or steam to clean the appliance.
- Clean the appliance with a moist cloth. Use only neutral detergents. Do not use abrasive products, abrasive cleaning pads, solvents or metal objects.

SAFETY INSTRUCTIONS

INSTALLATION

The installation must comply with relevant national regulations.

- Remove all the packaging and the transit bolts including rubber bush with plastic spacer.
- Keep the transit bolts in a safe place. If the appliance is to be moved in the future they must be reattached to lock the drum to prevent an internal damage.
- Always take care when moving the appliance as it is heavy. Always use safety gloves and enclosed footwear.
- Do not install or use a damaged appliance.
- Follow the installation instructions supplied with the appliance.
- Do not install or use the appliance where the temperature can be less than 0°C or where it is exposed to the weather.
- The floor area on which the appliance is to be installed must be flat, stable, heat resistant and clean.
- Make sure that there is air circulation between the appliance and the floor.
- When the appliance is in its permanent position, check if it is levelled correctly with the aid of a spirit level. If it is not, adjust the feet accordingly.
- Do not install the appliance directly above a floor drain.
- Do not spray water on the appliance and do not expose it to excessive humidity.
- Do not install the appliance where the appliance door cannot be fully opened.
- Do not put a closed container to collect possible water leakage under the appliance. Contact the Authorised Service Centre to ensure which accessories can be used.

ELECTRICAL CONNECTION



WARNING! Risk of fire and electric shock.

- The appliance must be earthed.
- Always use a correctly installed shockproof socket.
- Make sure that the parameters on the rating plate are compatible with the electrical ratings of the mains power supply.
- Do not use multi-plug adapters and extension cables.
- Make sure not to cause damage to the mains plug and to the mains cable. Should the mains cable need to be replaced, this must be carried out by our Authorised Service Centre.
- Connect the mains plug to the mains socket only at the end of the installation. Make sure that there is access to the mains plug after the installation.
- Do not touch the mains cable or the mains plug with wet hands.
- Do not pull the mains cable to disconnect the appliance. Always pull the mains plug.
- This appliance complies with the E.E.C. Directives.

WATER CONNECTION

- Do not cause damage to the water hoses.
- Before connection to new pipes, pipes not used for a long time, where repair work has been carried out or new devices fitted (water meters, etc.), let the water flow until it is clean and clear.
- Ensure that there are no visible water leaks during and after the first use of the appliance.
- Do not use an extension hose if the inlet hose is too short. Contact the Authorised Service Centre for the replacement of the inlet hose.
- It is possible to see water flowing from the drain hose. This is due to the testing of the appliance with the use of water in the factory.
- You can extend the drain hose to maximum 400 cm. Contact the Authorised Service Centre for the other drain hose and the extension.

USE



WARNING! Risk of injury, electric shock, fire, burns or damage to the appliance.

- Follow the safety instructions on the detergent packaging.
- Do not put flammable products or items that are wet with flammable products in, near or on the appliance.
- Make sure that all metal objects are removed from the laundry.
- Do not wash fabrics which are heavily soiled with oil, grease or other greasy substances. It can damage rubber parts of the washing machine. Prewash such fabrics by hand before loading them into the washing machine.
- Do not touch the glass door while a programme is in operation. The glass can get hot.

SERVICE

- To repair the appliance contact an Authorised Service Centre.
- Use original spare parts only.

DISPOSAL



WARNING! Risk of injury or suffocation.

- Disconnect the appliance from the mains electrical and water supplies.
- Cut off the mains electrical cable close to the appliance and dispose of it.
- Remove the door catch to prevent children or pets from becoming trapped in the drum.
- Dispose of the appliance in accordance with local requirements for the disposal of Waste Electrical and Electronic Equipment (WEEE).

PRODUCT DESCRIPTION

APPLIANCE OVERVIEW

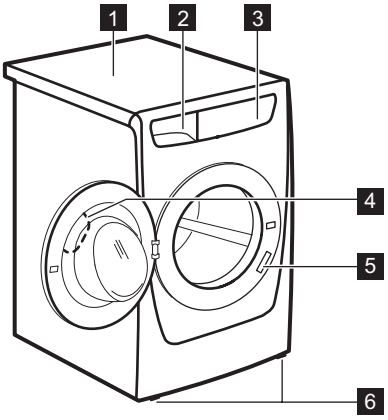

1. Worktop
2. Detergent dispenser
3. Control panel
4. Door handle
5. Rating plate
6. Feet for levelling the appliance

FIXING PLATE KIT (4055171146)

Available from your authorised dealer.

If you install the appliance on a plinth, secure the appliance in the fixing plates.

Read carefully the instructions supplied with the accessory.

EASY START

SPECIAL FEATURES

Your new washing machine meets all modern requirements for an effective treatment of laundry with low water, energy and detergent consumption and will care for fabrics.

This appliance is designed with a **self cleaning draining system**, allowing light fluff fibers that fall off the clothes to be drained out with the water, in such a way that there is no need to access this area for regular maintenance and cleaning.

CONTROL PANEL DESCRIPTION

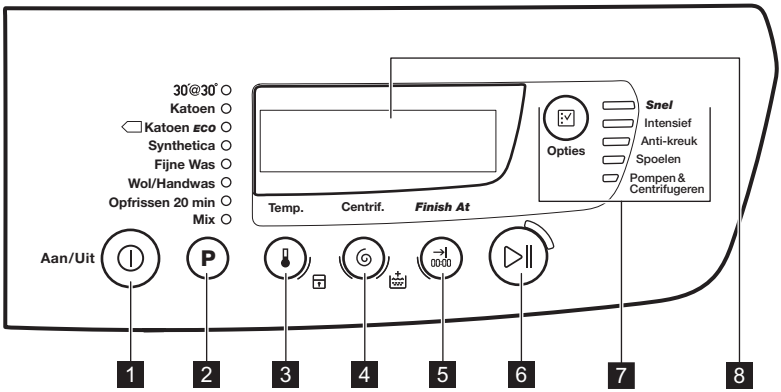

1. On / Off button (Aan/Uit)
2. Programme selection touchpad **P**
3. Temperature touchpad
4. Spin selection touchpad
5. Finish at touchpad (Finish At)
6. Start/Pause touchpad
7. Options selection touchpad
8. Display

DISPLAY

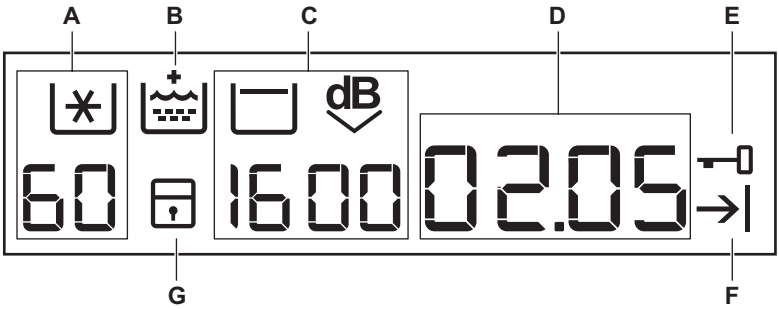

A. The Temperature area:
- 88: Temperature indicator
- : Cold water indicator

B. : The permanent extra rinse indicator

C. The spin area:
- 1888 : The spin speed indicator
- – – – : The No Spin indicator
- : The Rinse Hold indicator
- dB: The Extra Silent indicator

D. The time area:
- 1.25: The programme duration
- 17:30: The time of cycle finish (when the 00:00 is selected) or the current time[1)]
- E20: The alarm codes
- Err: The message of error
- 0: Programme is completed.

E. : The door locked indicator
- You cannot open the appliance door when the symbol is on.
- You can open the door only when the symbol goes off.

F. : The Finish At indicator (Finish At)

G. : The indicator of the child lock

PROGRAMME CHART

Programme Temperature range	Maximum load Reference spin speed	Programme description (Type of load and soil level)
30' @ 30° 30°C	3 kg 800 rpm	A short cycle for **synthetic and delicate items with light soil level** or for items to freshen up.
Katoen 90°C - Cold	10 kg 1400 rpm	**White cotton and coloured cotton**. Normal and heavy soil.

1) Visible only for 2 seconds when you activate the appliance.

Programme Temperature range	Maximum load Reference spin speed	Programme description (Type of load and soil level)
Katoen ECO[1)] 60°C - 40°C	10 kg 1400 rpm	**White cotton and fast-coloured cotton**. Normal soil. The energy consumption decreases and the time of the washing programme is extended, ensuring good washing results.
Synthetica 60°C - Cold	4 kg 1200 rpm	**Synthetic items or mixed fabric items**. Normal soil.
Fijne Was 40°C - Cold	4 kg 1200 rpm	**Delicate fabrics such as acrylics, viscose and mixed fabrics requiring gentler washing**. Normal soil.
Wol/Handwas 40°C - Cold	1,5 kg 1200 rpm	**Machine washable wool, hand washable wool and other fabrics** with «hand washing» care symbol[2)].
Opfrissen 20 min 40°C - 30°C	3 kg 1200 rpm	A very short cycle for **cotton and synthetic items with light soil level** or worn only once.
Mix 60°C - Cold	3 kg 1200 rpm	Special programme for **cotton, synthetic and mixed fabrics** with light soil. In case of setting cold wash cycle make sure to use the detergent designed for low temperatures.

1) Standard programmes for the Energy Label consumption values. According to regulation 1061/2010, these programmes are respectively the «Standard 60°C cotton programme» and the «Standard 40°C cotton programme». They are the most efficient programmes in terms of combined energy and water consumption for washing normally soiled cotton laundry.

The water temperature of the washing phase may differ from the temperature declared for the selected programme.

2) During this cycle the drum rotates slowly to ensure a gentle wash. It can seem that the drum doesn't rotate or doesn't rotate properly, but this is normal for this programme.

Programme options compatibility

Programme	Snel[1)]	Intensief	Anti-kreuk	Spoelen	Pompen & Centrifugeren
30' @ 30°	■			■	■
Katoen	■	■	■	■	■

Programme				dB	Snel[1)]	Intensief	Anti-kreuk	Spoelen	Pompen & Centrifugeren		
Katoen ECO	■	■	■	■	■			■	■	■	■
Synthetica	■	■	■	■	■	■	■	■	■	■	■
Fijne Was	■	■	■	■	■	■		■	■	■	■
Wol/Hand-was	■	■	■	■				■	■	■	
Opfrissen 20 min	■	■	■					■	■	■	
Mix	■	■	■		■	■	■	■	■	■	■

1) When you set this option, we recommend that you decrease the quantity of the laundry. It is possible to keep the full load but the washing results can be unsatisfactory. Recommended load: cotton: 5 kg, synthetics and delicates: 2,5 kg.

CONSUMPTION VALUES

Stated values are obtained in laboratory conditions with relevant standards. Different causes can change the data: the quantity and type of laundry and ambient temperature. Water pressure, the supply voltage and the temperature of inlet water may also affect the washing programme duration.

Technical specifications may be changed without prior notice to improve the quality of product.

At the start of the programme, the display shows the programme duration for the maximum load capacity.
During the washing phase the programme duration is automatically calculated and can be greatly reduced if the laundry load is lower than the maximum load capacity (e.g. Cotton 60°C, maximum load capacity 10 kg, the programme duration exceeds 2 hours; actual load 1 kg, the programme duration will be less than 1 hour).
When the appliance is calculating the real programme duration a dot flashes in the display.

Programmes	Load (kg)	Energy consumption (kWh)	Water consumption (litre)	Approximate programme duration (minutes)	Remaining moisture (%)[1)]
Katoen 60°C	10	2,04	87	240	52
Katoen 40°C	10	1,40	83	210	52
Synthetica 40°C	4	0,80	61	140	35
Fijne Was 40°C	4	0,56	75	95	35
Wol/Handwas 30°C [2)]	1,5	0,42	62	75	30
Standard cotton programmes					
Standard 60°C cotton	10	0.93	57	246	52
Standard 60°C cotton	5	0,70	45	206	52
Standard 40°C cotton	5	0,65	46	203	52

1) At the end of spin phase.
2) Not available for some models.

Off Mode (W)	Left On Mode (W)
0.30	0.30

The information given in the chart above is compliant with the EU Commission regulation 1015/2010 implementing directive 2009/125/EC .

OPTIONS

TEMPERATURE

With this option you can change the default temperature.

Indicator = cold water.

The indicator of the set temperature comes on.

CENTRIFUGEREN

With this option you can decrease the default spin speed.

The display shows the indicator of the set speed.

Additional spin options:

No Spin

- Set this option to remove all spin phases.
- Set it for very delicate fabrics.
- The rinse phase uses more water for some washing programmes.
- The display shows the indicator– – –.

Rinse Hold

- Set this option to prevent the laundry creases.
- The washing programme stops with the water in the drum. The drum turns regularly to prevent the laundry creases.

- The door stays locked. You must drain the water to unlock the door.
- The display shows the indicator .

To drain the water refer to 'At the end of the programme'.

Extra Silent

- Set this option to remove all spin phases and to perform a silent washing.
- The rinse phase uses more water for some washing programmes.
- The washing programme stops with the water in the drum. The drum turns regularly to prevent the laundry creases.
- The door stays locked. You must drain the water to unlock the door.
- The display shows the indicator dB.

To drain the water refer to 'At the end of the programme'.

SNEL

With this option you can decrease the programme duration.

Use this option for items with light soil or items to refresh.

The related indicator comes on.

INTENSIEF

With this option you can wash very soiled laundry.

The washing cycle lasts longer with this option.

The related indicator comes on.

ANTI-KREUK

The appliance carefully washes and spins the laundry to prevent the creases.

The appliance decreases the spin speed, uses more water and adapts the programme duration to the type of laundry.

The related indicator comes on.

SPOELEN

With this option you can perform only a last rinse of a selected washing programme.

If you set also the Extra Rinse function ( ) the appliance adds two or more rinses.

The related indicator comes on.

POMPEN & CENTRIFUGEREN

With this option you can perform the spin and drain cycle.

The spin phase is suitable to the washing programme you set.

If you set also the No Spin option (– – –) , the appliance only drains.

FINISH AT

With this option you can set the exact time in which you would like your washing programme to be completed.

The start of the washing programme delays. The washing programme finishes in the set hour.

You can set the end time to 20 hours forward at maximum.

The display shows the set hour of cycle's finish and the indicator comes on.

EXTRA RINSE

With this option you can add some rinses to a washing programme.

Use this option for persons allergic to detergents and in areas where the water is soft.

The related indicator comes on.[1)]

SETTINGS

PERMANENT EXTRA RINSE

With this option you can permanently have an extra rinse when you set a new programme.

- To **activate/deactivate** this option touch the buttons and at the same time until the indicator **comes on/goes off**.

CHILD LOCK

With this option you can prevent that the children play with the control panel.

- To **activate/deactivate** this option, touch the buttons and at the same time until the indicator **comes on/goes off**.

1) See in "Settings" how to activate this option.

Activate this option after you touch the button ▷‖ : the buttons are locked (except for the button ⏻) .

This option stays active even when you switch off the appliance.

ACOUSTIC SIGNALS

The acoustic signals operate when:

- The programme is completed.
- The appliance has a malfunction.

To **deactivate/activate** the acoustic signals, touch the buttons **P** and 🌡 at the same time for 4 seconds.

If you deactivate the acoustic signals, they continue operate when the appliance has a malfunction.

BEFORE FIRST USE

WARNING! Refer to Safety chapters.

BEFORE FIRST USE

During installation or before first use you may observe some water in the appliance. This is residual water left in the appliance after a full functional test in the factory to ensure the appliance is delivered to customers in perfect working order and is no cause for concern.

1. Connect the mains plug to the mains socket.
2. Open the water tap.
3. Put a small quantity of detergent in the compartment for washing phase.
4. Set and start a programme for cotton at the highest temperature without laundry.

This removes all possible dirt from the drum and the tub.

CLOCK SETTING

1. Touch the button 🌡 and the button →| 00:00 at the same time for some seconds.

The hour digits flash.

2. Touch the button →| 00:00 to change (or confirm) the hour. The hours change with the steps of one hour.

If you keep the button →| 00:00 pressed the digits change in a quicker way.

3. Touch the button ▷‖ to confirm the selection.

The minute digits flash.

4. Touch the button →| 00:00 to change (or confirm) the minutes. The minutes change with the steps of one minute.
5. Touch the button ▷‖ to confirm the selection.

The appliance enters automatically in clock setting mode when:

- you activate the appliance for the first time after the installation,
- you activate the appliance for the first time after it has been unplugged for more than two weeks,
- you did not confirm the time selection within 15 seconds period from last button touching,
- you switched the appliance off before confirming the time.

DAILY USE

WARNING! Refer to Safety chapters.

LOADING THE LAUNDRY

Open the water tap. Connect the mains plug to the mains socket.

1. Pull the door handle to open the appliance door.
2. Put the laundry in the drum, one item at a time.
3. Shake the items before you put them in the appliance.

Make sure not to put too much laundry in the drum. Refer to max. loads indicated in "Programme chart".

4. Close the door.



CAUTION! Make sure that no laundry stays between the seal and the door. There is a risk of water leakage or damage to the laundry.

Washing heavily oiled, greasy stains could cause damage rubber parts of the washing machine.

USING DETERGENT AND ADDITIVES

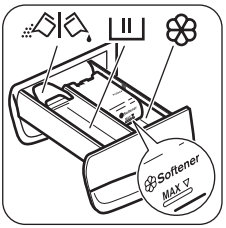

1. Measure out the detergent and the fabric conditioner.
2. Put the detergent and the fabric conditioner into the compartments.
3. Carefully close the detergent drawer.

DETERGENT COMPARTMENTS

	Detergent compartment for washing phase. If you use liquid detergent, put it immediately before you start the programme.
	Compartment for liquid additives (fabric conditioner, starch). **CAUTION!** Do not exceed the **MAX** level.
	Flap for powder or liquid detergent.

LIQUID OR POWDER DETERGENT

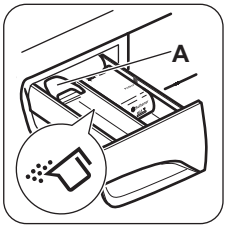

The default position of the flap is **A** (powder detergent).

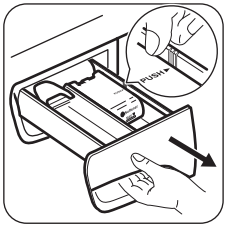

To use liquid detergent:
1. Remove the drawer. Push the drawer edge in the place with the arrow (PUSH) to remove the drawer easily.

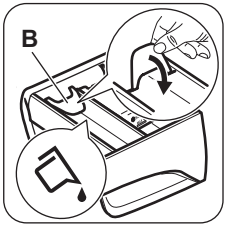

2. Adjust the flap in position **B**.
3. Put back the drawer in the recess.

When you use the liquid detergent:
- Do not use gelatinous or thick liquid detergents.
- Do not put more liquid then 120 ml.
- Do not set the delay start.

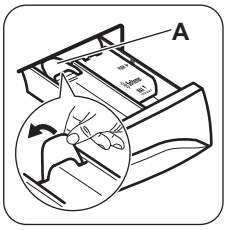

When the flap is in position B and you want to use powder detergent:
1. Remove the drawer.
2. Adjust the flap in position **A**.
3. Put back the drawer in the recess.

- Measure out the detergent and the fabric conditioner.
- Put the detergent and the fabric conditioner into the compartments.
- Carefully close the detergent drawer.

ACTIVATING THE APPLIANCE

Press and hold the Aan/Uit button to activate or deactivate the appliance.

A tune sounds when the appliance is activated.

SETTING A PROGRAMME

1. Touch the programme button **P** and set the programme:
   - The indicator of the button ▷‖ flashes.
   - The display shows the programme duration.
2. If necessary, change the temperature and the spin speed or add available options. When you activate an option, the indicator of the set option comes on.

If you set something incorrect, the display shows the message Err.

STARTING A PROGRAMME WITHOUT THE FINISH AT →| 00:00 OPTION

Touch the button ▷‖.

- The indicator of the button ▷‖ stops to flash and stays on.
- The programme starts, the door locks, the indicator 🔒 is on.
- The drain pump can operate for a short time at the beginning of the washing cycle.

After approximately 15 minutes from the start of the programme:
- The appliance adjusts automatically the programme duration agree with the laundry load.
- The display shows the new value.

STARTING A PROGRAMME WITH THE FINISH AT →| 00:00 OPTION

Check if the appliance has the correct hour set. See in "Clock setting" how to set the appliances's clock.

First set the programme (and add options) then set the option →| 00:00.

1. Touch the button →| 00:00 to set the desired end time. With the first touch the time is rounded to the nearest hour or to the nearest half an hour. By each next touch the end time increases by 30 minutes segments until maximum range of 20 hours.[1)]

The display shows the finish hour you set (e.g. 17:30) and the indicator →| is on to show that this option is active.

2. Touch the button ▷‖:
   - The door is locked.
   - The appliance starts the countdown.
   - When the countdown is completed, the programme starts automatically and the actual programme duration counts down in minutes until the cycle end.

You can cancel or change the set of the option →| 00:00 before you touch the button ▷‖. After touching the button ▷‖ you can only cancel the option →| 00:00.

To cancel the Finish At →| 00:00 option:

a. Touch the button ▷‖ to set the appliance to pause. The indicator of button ▷‖ flashes.

b. Touch the button →| 00:00 again and again until the indicator →| goes off from the display. Touch the button ▷‖ again to start the programme immediately.

INTERRUPTING A PROGRAMME AND CHANGING THE OPTIONS

You can change only some options before they operate.

1. Touch ▷‖.

The indicator of this button flashes.

2. Change the options.

If you change any option the →| 00:00 option (if set) will be disabled.

3. Touch ▷‖ again.

The programme continues.

CANCELLING A PROGRAMME

1. Press the button ⏻ for some seconds to cancel the programme and to deactivate the appliance.
2. Press the same button again to activate the appliance. Now, you can set a new washing programme.

Before starting the new programme the appliance could drain the water. In this case, make sure that the detergent is still in the detergent compartment, if not fill the detergent again.

---

1) If you keep the button →| 00:00 pressed the digits change in a quicker way.

OPENING THE DOOR

While a programme (or the 00:00) operates, the appliance door is locked. The indicator is on.

CAUTION! If the temperature and level of the water in the drum are too high, you cannot open the door.

To open the door during the first minutes of the cycle (or when the 00:00 operates) :

1. Touch the button ▷‖ to pause the appliance.
2. Wait until the indicator goes off.
3. You can open the door.
4. Close the door and touch the button ▷‖ again. The programme (or the 00:00) continues.

AT THE END OF THE PROGRAMME

- The appliance stops automatically.
- The acoustic signal operates (if it is activated).
- In the display 0 comes on.
- The indicator of the button ▷‖ goes off.
- The door lock indicator goes off.
- You can open the door.
- Remove the laundry from the appliance. Make sure that the drum is empty.
- Press the button ⏻ for some seconds to deactivate the appliance.
- Close the water tap.
- Keep the door and the detergent drawer ajar, to prevent the mildew and odours.

The washing programme is completed, but there is water in the drum:

- The drum turns regularly to prevent the creases in the laundry.
- The indicator flashes to remind you to drain the water.
- The door lock indicator is on. The indicator of button ▷‖ flashes. The door stays locked.
- You must drain the water to open the door.

Draining the water:

1. To drain the water.
   - Touch the button ▷‖. The appliance drains the water and spins with the maximum spin speed for selected washing programme.
   - Alternatively, touch the button to change the spin speed and then touch the button ▷‖. The appliance drains the water and spins. If you set , the appliance only drains.
2. When the programme is completed and the door lock indicator goes off, you can open the door.
3. Press the button ⏻ for some seconds to deactivate the appliance.

The appliance drains and spins automatically after approximately 18 hours (except for Wool programme).

AUTO-OFF OPTION

The AUTO-OFF stand-by option automatically deactivates the appliance to decrease the energy consumption. All the indicators and the display go off when :

- You do not use the appliance for 5 minutes before you touch ▷‖.
  Press the button ⏻ to activate the appliance again.
- After 5 minutes from the end of the washing programme.
  Press the button ⏻ to activate the appliance again.
  The display shows the end of the last set programme.
  Touch the button **P** if you want to set a new cycle.

HINTS AND TIPS

THE LAUNDRY LOAD

- Divide the laundry in: white, coloured, synthetics, delicates and wool.
- Obey the washing instructions that are on the laundry care labels.
- Do not wash white and coloured items together.
- Some coloured items can discolour with the first wash. We recommend that you wash them separately for the first times.
- Button up pillowcases, close zippers, hooks and poppers. Tie up belts.
- Empty the pockets and unfold the items.
- Turn multilayered fabrics, wool and items with painted illustrations inside out.
- Remove hard stains with a special detergent.
- Wash and pre-treat heavy soil stains before putting items in drum

- Be careful with the curtains. Remove the hooks and put the curtains in a washing bag or pillowcase.
- Do not wash laundry without hems or with cuts. Use a washing bag to wash small and/or delicate items (e.g. underwired bras, belts, tights, etc.).
- A very small load can cause balance problems with the spin phase. If this occurs, adjust manually the items in the tub and start the spin phase again.

STUBBORN STAINS

For some stains, water and detergent is not sufficient.

We recommend that you pre-treat these stains before you put the items in the appliance.

Special stain removers are available. Use the special stain remover that is applicable to the type of stain and fabric.

DETERGENTS AND ADDITIVES

- Only use detergents and additives specially made for washing machines:
  - powder detergents for all types of fabric,
  - powder detergents for delicate fabrics (40 °C max) and woollens,
  - liquid detergents, preferably for low temperature wash programmes (60 °C max) for all types of fabric, or special for woollens only.
- Do not mix different types of detergents.
- To help the environment, do not use more than the correct quantity of detergent.
- Obey the instructions that you find on the on packaging of these products.
- Use the correct products for the type and colour of the fabric, the programme temperature and the level of soil.
- If your appliance does not have the detergent dispenser with the flap device, add the liquid detergents with a dosing ball (supplied by the detergent's manufacturer).

ECOLOGICAL HINTS

- Always start a washing programme with the maximum load of laundry allowed.
- If necessary, use a stain remover when you set a programme with a low temperature.
- To use the correct quantity of detergent, check the water hardness of your domestic system. Refer to "Water hardness".

WATER HARDNESS

If the water hardness in your area is high or moderate, we recommend that you use a water softener for washing machines. In areas where the water hardness is soft it is not necessary to use a water softener.

To know the water hardness in your area, contact your local water authority.

Use the correct quantity of the water softener. Obey the instructions that you find on the packaging of the product.

CARE AND CLEANING

WARNING! Refer to Safety chapters.

EXTERNAL CLEANING

Clean the appliance with soap and warm water only. Fully dry all the surfaces.

CAUTION! Do not use alcohol, solvents or chemical products.

DESCALING

If the water hardness in your area is high or moderate, we recommend that you use a water descaling product for washing machines.

Regularly examine the drum to prevent limescale and rust particles.

To remove rust particles use only special products for washing machines. Do this separately from the laundry wash.

Always obey the instructions that you find on the packaging of the product.

MAINTENANCE WASH

With the low temperature programmes it is possible that some detergent stays in the drum. Perform a maintenance wash regularly. To do this:

- Remove all laundry from the drum.
- Select the cotton programme with the highest temperature with a small quantity of detergent.

DOOR SEAL

This appliance is designed with a **self cleaning draining system**, allowing light fluff fibers that fall off the clothes to be drained out with the water, in

such a way that there is no need to access this area for regular maintenance and cleaning.

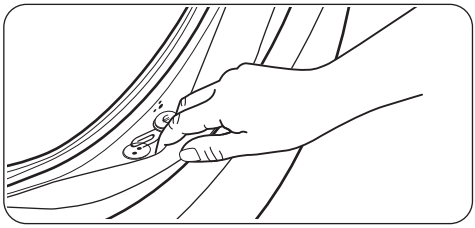

Regularly examine the seal and remove all objects from the inner part. Coins, buttons, other small items forgotten in the pockets of your clothes are deposited during the washing cycle in the special double lip trap in the porthole seal, where they can be conveniently recovered at the end of the cycle.

CLEANING THE DETERGENT DISPENSER

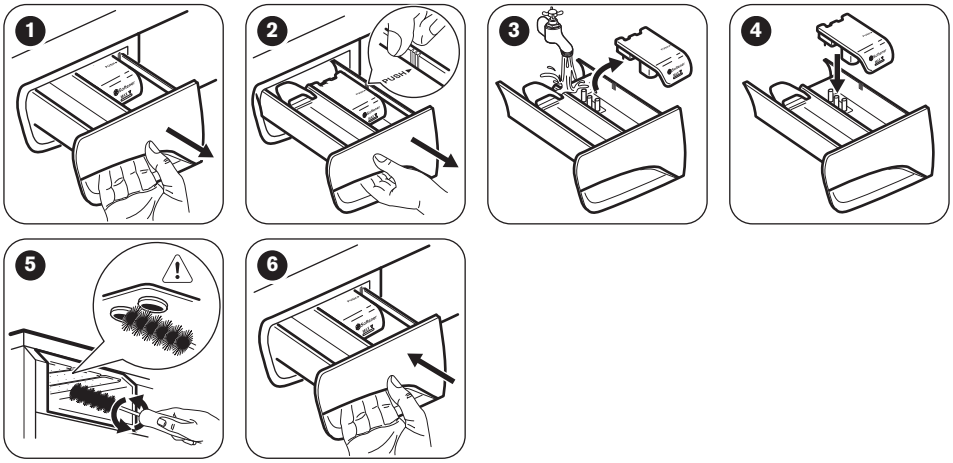

CLEANING THE INLET HOSE AND THE VALVE FILTER

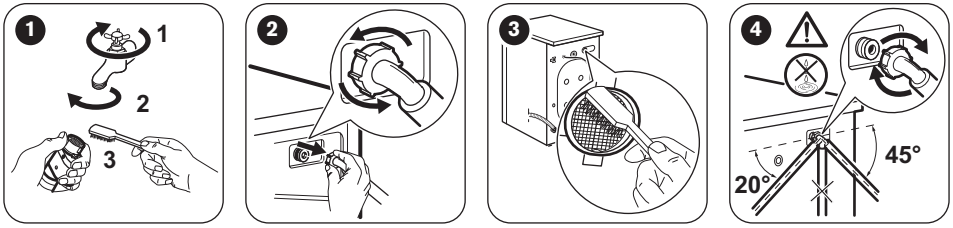

FROST PRECAUTIONS

If the appliance is installed in an area where the temperature can be less than 0 °C, remove the remaining water from the inlet hose and the drain pump.

Do this procedure also when you want to do the emergency drain.

1. Disconnect the mains plug from the mains socket.
2. Remove the water inlet hose.
3. Remove the drain hose from the rear support and unhook it from sink or spigot.
4. Put the ends of the drain and inlet hose in a container. Let the water flow out of the hoses.

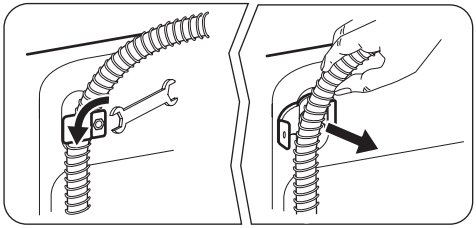

5. When no more water flows, install the inlet hose and the drain hose again.

WARNING! Make sure that the temperature is more than 0 °C before you use the appliance again. The manufacturer is not responsible for damages caused by low temperatures.

TROUBLESHOOTING

WARNING! Refer to Safety chapters.

INTRODUCTION

The appliance does not start or it stops during operation.

First try to find a solution to the problem (refer to the table). If the problem persists, contact the Authorised Service Centre.

With some problems, the acoustic signals operate and the display shows an alarm code:

- E10 - The appliance does not fill with water properly. Start the appliance again by pressing ▷II button. After 10 seconds the door will be unlocked.
- E20 - The appliance does not drain the water.
- E40 - The appliance door is open or not closed correctly. Please check the door!

If the appliance is overloaded, remove some items from the drum and/or keep pressed the door and push the ▷II button at the same time until the indicator 🔒 stops flashing (see the picture below).

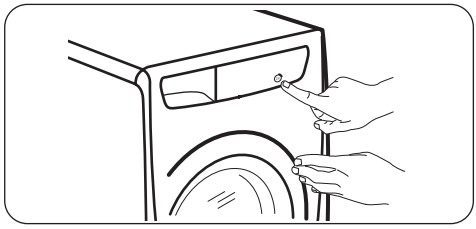

- EH0 - The mains supply is unstable. Wait until the mains supply is stable.
- E91 - No communication between electronic elements of the appliance. Switch off and switch on again. The programme was not finished properly or the appliance stopped too early. If the alarm code appears again, contact the Authorised Service Centre.
- EF0 - The anti-flood device is on. Disconnect the appliance and close the water tap. Contact the Authorised Service Centre.

WARNING! Deactivate the appliance before you do the checks.

POSSIBLE FAILURES

Problem	Possible solution
The programme does not start.	▪ Make sure that the mains plug is connected to the mains socket. ▪ Make sure that the appliance door is closed. ▪ Make sure that there is not a damaged fuse in the fuse box. ▪ Make sure that the Start/Pause has been pressed. ▪ If the delay start is set, cancel the setting or wait for the end of countdown. ▪ Deactivate the Child Lock function if it is on.
The appliance does not fill with water properly.	▪ Make sure that the water tap is open. ▪ Make sure that the pressure of the water supply is not too low. For this information, contact your local water authority. ▪ Make sure that the water tap is not clogged. ▪ This problem may be caused by the filter of the inlet hose or the valve drain filter which may be clogged. Refer to “Care and cleaning”. If problem remains please contact the Authorised Service Centre. ▪ Make sure that the inlet hose has no kinks or bends. ▪ Make sure that the connection of the water inlet hose is correct.
The appliance does not drain the water.	▪ Make sure that the sink spigot is not clogged. ▪ Make sure that the drain hose has no kinks or bends. ▪ Make sure that the connection of the drain hose is correct. ▪ Set the drain option if you set a programme without drain phase. ▪ Set the drain option if you set an option which ends with water in the drum. ▪ This problem may be caused by the clogged drain filter. Please contact the Authorised Service Centre.
The spin phase does not operate or the washing cycle lasts longer than usually.	▪ Adjust manually the items in the tub and start the spin phase again. This problem may be caused by balance problems. ▪ Set the spin option. ▪ Set the drain option if you set an option which ends with water in the drum. ▪ This problem may be caused by the clogged drain filter. Please contact the Authorised Service Centre.
There is water on the floor.	▪ Make sure that the couplings of the water hoses are tight and there is not water leakages. ▪ Make sure that the water inlet hose and the drain hose have no damages. ▪ Make sure you use the correct detergent and the correct quantity of it.
You cannot open the appliance door.	▪ Make sure that the washing programme is finished. ▪ Set the drain or the spin option if there is water in the drum. ▪ Do the emergency drain procedure. See "Frost precautions" (in "Care and Cleaning" chapter).
The appliance makes an unusual noise.	▪ Make sure the levelling of the appliance is correct. Refer to 'Installation instruction'. ▪ Make sure that the packaging and/or the transit bolts are removed. Refer to 'Installation instruction'. ▪ Add more laundry in the drum. The load may be too small.

Problem	Possible solution
The appliance fills with water and drain immediately.	▪ Make sure that the drain hose is in the correct position. The end of the hose may be too low. Refer to 'Installation instruction'.
The cycle is shorter than the time displayed.	▪ The appliance calculates a new time according to the laundry load. See the 'Consumption Values' chapter.
The cycle is longer than the time displayed.	▪ An unbalanced laundry load increases the duration time. This is a normal behaviour of the appliance.
The washing results are not satisfactory.	▪ Increase the detergent quantity or use a different detergent. ▪ Use special products to remove the stubborn stains before you wash the laundry. ▪ Make sure that you set the correct temperature. ▪ Decrease the laundry load.
You cannot set an option.	▪ Make sure that you press only the wanted touch button(s).

After the check, activate the appliance. The programme continues from the point of interruption.

If the problem occurs again, contact the Authorised Service Centre.

If the display shows other alarm codes. Deactivate and activate the appliance. If the problem continues, contact the Authorised Service Centre.

SERVICE

We recommend the use of original spare parts.

When contacting the Authorised Service Centre, make sure that these data are available. You can find the information on the rating plate: model, PNC and Serial Number. (Mod., Prod. No., Ser. No.)

TECHNICAL DATA

Dimension	Width/ Height/ Depth/ Total depth	600 mm/ 850 mm/ 600 mm/ 660 mm
Electrical connection	Voltage Overall power Fuse Frequency	230 V 2200 W 10 A 50 Hz
Level of protection against ingress of solid particles and moisture ensured by the protective cover, except where the low voltage equipment has no protection against moisture		IPX4
Water supply pressure	Minimum Maximum	0,5 bar (0,05 MPa) 8 bar (0,8 MPa)
Water supply [1)]		Cold water
Maximum Load	Cotton	10 kg
Energy Efficiency Class		A+++ -20%
Spin Speed	Maximum spin speed	1351 rpm

1) Connect the water inlet hose to a water tap with a 3/4" thread.

PRODUCT INFORMATION SHEET IN REFERENCE TO E.U. REGULATION 1369/2017

Product Information Sheet	
Trade Mark	ZANUSSI
Model	ZWF 0147NX, PNC914910603
Rated capacity in kg	10
Energy efficiency class	A+++ -20%
Energy consumption in kWh per year, based on 220 standard washing cycles for cotton programmes at 60 °C and 40 °C at full and partial load, and the consumption of the low-power modes. Actual energy consumption will depend on how the appliance is used.	190
Energy consumption of the standard 60°C cotton programme at full load in kWh	0.93
Energy consumption of the standard 60°C cotton programme at partial load in kWh	0,70
Energy consumption of the standard 40°C cotton programme at partial load kWh	0,65
Power consumption of the off-mode in W	0,3
Power consumption in left-on mode in W	0,3
Water consumption in litres per year, based on 220 standard washing cycles for cotton programmes at 60 °C and 40 °C at full and partial load. Actual water consumption will depend on how the appliance is used.	11790
Spin-drying efficiency class on a scale from G (least efficient) to A (most efficient)	B
Maximum spin speed in rpm	1351
Remaining moisture content in %	52
The 'standard 60 °C cotton programme' and the 'standard 40 °C cotton programme' are the standard washing programmes to which the information in the label and the fiche relates, these programmes are suitable to clean normally soiled cotton laundry and they are the most efficient in terms of combined energy and water consumption.	-
Programme time of the standard 60°C cotton programme at full load in minutes	246
Programme time of the standard 60°C cotton programme at partial load in minutes	206
Programme time of the "standard 40°C cotton programme at partial load in minutes	203
Duration of the left on mode in minutes	5
Airborne acoustical noise emission in db(A) washing	54

Airborne acoustical noise emission in db(A) spinning	78
Built in appliance Y/N	No

The information given in the chart above is compliant with the EU Commission regulation 1015/2010 implementing directive 2009/125/EC .

ENVIRONMENTAL CONCERNS

Recycle materials with the symbol . Put the packaging in relevant containers to recycle it. Help protect the environment and human health by recycling waste of electrical and electronic appliances. Do not dispose of appliances marked with the symbol  with the household waste. Return the product to your local recycling facility or contact your municipal office.

WWW.ZANUSSI.COM/SHOP



CE

192959791-A-302018