ATGBICS® by APPROVED TECHNOLOGY

Technical Datasheet

SFP-25G-SR-X

25GBase-SR SFP28 Transceiver

Hot Pluggable, +3.3V, LC Duplex, 850nm, up to 100m, Extended Temperature

FEATURES

- Supports 25Gb/s bit rates
- Hot-Pluggable
- Duplex LC connector
- 850nm VCSEL transmitter, PIN photodetector
- MMF links up to 100m
- 2-wire interface for management specifications compliant with SFF-8472 digital diagnostic monitoring interface
- Power Supply: +3.3V
- Power consumption<1W
- Extended Operating Temperature Range: -5 to 85°C
- RoHS compliant

APPLICATIONS

- 25GBASE-SR/SW Ethernet
- SONET OC-192 / SDH
- 25G Fibre Channel

DESCRIPTION

ATGBICS SFP-25G-SR-X transceiver is a very compact 25Gb/s optical transceiver module for serial optical communication applications at 25Gb/s. The SFP-25G-SR-X converts a 25Gb/s serial electrical data stream to 25Gb/s optical output signal and a 25Gb/s optical input signal to 25Gb/s serial electrical data streams. The high speed 25Gb/s electrical interface is fully compliant with SFI specification.

The high performance 850nm VCSEL transmitter and high sensitivity PIN receiver provide superior performance for Ethernet applications at up to 100m links.

The SFP28 Module is compliant with SFF-8431, SFF-8432 and IEEE 802.3ae 25GBASE-SR. Digital diagnostics functions are available via a 2-wire serial interface, as specified in SFF-8472.
The fully SFP compliant form factor provides hot pluggability, easy optical port upgrades and low EMI emission.

ATGBICS® All rights reserved. EOE

ATGBICS.com | Approved-Technology.com | +44 (0) 1202 424 518 | sales@approved-technology.com

ABSOLUTE MAXIMUM RATINGS

Parameter	Symbol	Min.	Typical	Max.	Unit
Case Operating Temperature	T_A	-5		85	℃
Storage Temperature	T_S	-40		85	℃
Maximum Supply Voltage	Vcc	-0.5		4	V
Relative Humidity	RH	0		85	%

ELECTRICAL CHARACTERISTICS (VCC = 3.135 to 3.465 Volts)

Parameter	Symbol	Min.	Typical	Max.	Unit	Notes
Supply Voltage	Vcc	3.135		3.465	V	
Supply Current	Icc			250	mA	
Power Consumption	P			1	W	
TRANSMITTER						
Input Differential Impedance	R_{in}		100		Ohms (Ω)	1
Tx Input Single Ended DC Voltage Tolerance (Ref VeeT)	V	-0.3		4	V	
Differential Input Voltage Swing	Vin, pp	180		700	mV	2
Transmit Disable Voltage	V_D	2		Vcc	V	3
Transmit Enable Voltage	V_{EN}	Vee		Vee+0.8	V	
RECEIVER						
Single Ended Output Voltage Tolerance	V	-0.3		4	V	
Rx Output Diff Voltage	Vo	300		850	mV	
Rx Output Rise and Fall Time	Tr/Tf	30			ps	4
LOS Fault	$V_{LOS\ fault}$	2		Vcc_{HOST}	V	5
LOS Normal	$V_{LOS\ norm}$	Vee		Vee+0.8	V	5

Notes:

1. Connected directly to TX data input pins. AC coupling from pins into laser driver IC.
2. Per SFF-8431 Rev 3.0
3. Into 100 Ohms differential termination.
4. 20%～80%
5. LOS is an open collector output. Should be pulled up with 4.7k – 10k Ohms on the host board. Normal operation is logic 0; loss of signal is logic 1. Maximum pull-up voltage is 5.5V.

OPTICAL PARAMETERS (VCC 3.135 to 3.465 Volts)

Parameter	Symbol	Min.	Typical	Max.	Unit	Notes
TRANSMITTER						
Center Wavelength	λt	840	850	860	nm	
RMS Spectral Width	λ_{RMS}			4	nm	
Average Optical Power	Pavg	-7.3		-1	dBm	1
Optical Power OMA	Poma		-1.5		dBm	
Laser Off Power	Poff			-30	dBm	
Extinction Ratio	ER	3.5			dB	
Transmitter Dispersion Penalty	TDP			3.9	dB	2
Relative Intensity Noise	Rin			-128	dB/Hz	3
Optical Return Loss Tolerance		20			dB	
RECEIVER						
Center Wavelength	λr	840		860	nm	
Receiver Sensitivity (OMA)	Sen			-11.1	dBm	4
Stressed Sensitivity (OMA)	Sen_{ST}			-7.5	dBm	4
Los Assert	LOS_A	-30		-	dBm	
Los Dessert	LOS_D			-12	dBm	
Los Hysteresis	LOS_H	0.5			dB	
Overload	Sat	0			dBm	5
Receiver Reflectance	Rrx			-12	dB	

Notes:

1. Average power figures are informative only, per IEEE802.3ae.
2. TWDP figure requires the host board to be SFF-8431 compliant. TWDP is calculated using the Matlab code provided in clause 68.6.6.2 of IEEE802.3ae.
3. 12dB reflection.
4. Conditions of stressed receiver tests per IEEE802.3ae. CSRS testing requires the host board to be SFF-8431 compliant.
5. Receiver overload specified in OMA and under the worst comprehensive stressed condition.

TIMING CHARACTERISTICS

Parameter	Symbol	Min.	Typical	Max.	Unit
TX_Disable Assert Time	t_off			10	us
TX_Disable Negate Time	t_on			1	ms
Time to Initialize Include Reset of TX_FAULT	t_int			300	ms
TX_FAULT from Fault to Assertion	t_fault			100	us
TX_Disable Time to Start Reset	t_reset	10			us
Receiver Loss of Signal Assert Time	T_A,RX_LOS			100	us
Receiver Loss of Signal Deassert Time	T_d,RX_LOS			100	us
Rate-Select Chage Time	t_ratesel			10	us
Serial ID Clock Time	t_serial-clock			100	kHz

PIN ASSIGNMENT

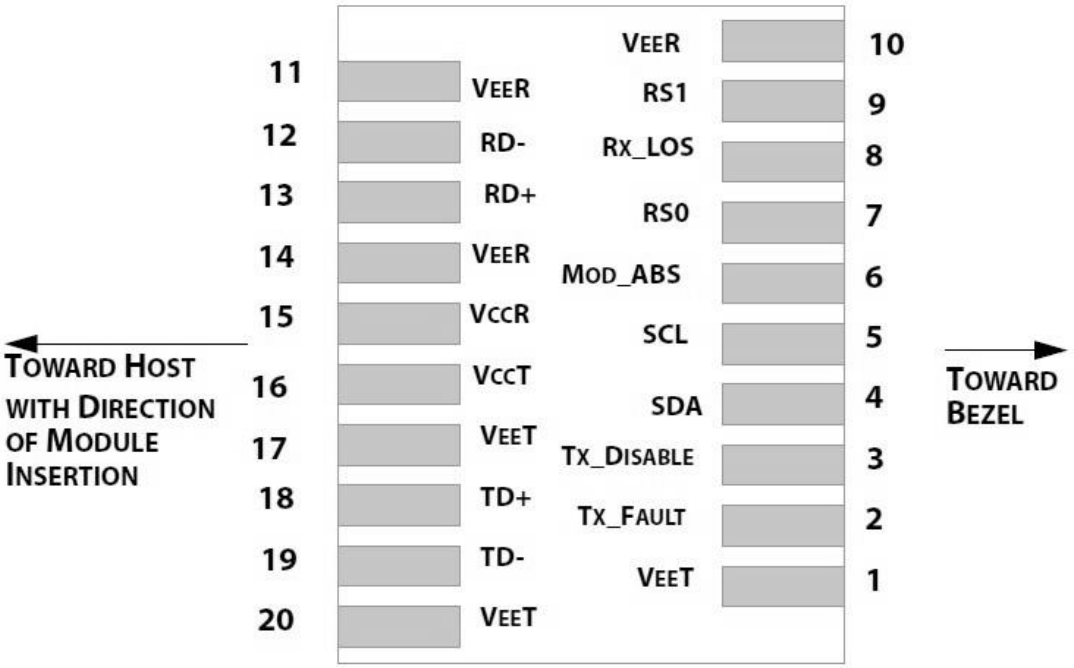

Diagram of Host Board Connector Block Pin Numbers and Name

PIN FUNCTION DEFINITIONS

PIN No	Name	Function	Notes
1	VeeT	Module transmitter ground	1
2	Tx Fault	Module transmitter fault	2
3	Tx Disable	Transmitter Disable; Turns off transmitter laser output	3
4	SDL	2 wire serial interface data input/output (SDA)	
5	SCL	2 wire serial interface clock input (SCL)	
6	MOD-ABS	Module Absent, connect to VeeR or VeeT in the module	2
7	RS0	Rate select0, optionally control SFP28 receiver. When high, input data rate >4.5Gb/s; when low, input data rate <=4.5Gb/s	
8	LOS	Receiver Loss of Signal Indication	4
9	RS1	Rate select0, optionally control SFP28 transmitter. When high, input data rate >4.5Gb/s; when low, input data rate <=4.5Gb/s	
10	VeeR	Module receiver ground	1
11	VeeR	Module receiver ground	1
12	RD-	Receiver inverted data out put	
13	RD+	Receiver non-inverted data out put	
14	VeeR	Module receiver ground	1
15	VccR	Module receiver 3.3V supply	
16	VccT	Module transmitter 3.3V supply	
17	VeeT	Module transmitter ground	1
18	TD+	Transmitter inverted data out put	
19	TD-	Transmitter non-inverted data out put	
20	VeeT	Module transmitter ground	1

Notes:

1. The module ground pins are isolated from the module case.
2. This pin is an open collector/drain output pin and is pulled up with 4.7k – 10k Ohms to Host_Vcc on the host board.
3. This pin is pulled up with 4.7k – 10k Ohms to VccT in the module.
4. This pin is an open collector/drain output pin and is pulled up with 4.7k – 10k Ohms to Host_Vcc on the host board.

SFP MODULE EEPROM INFORMATION AND MANAGEMENT

The SFP modules implement the 2-wire serial communication protocol as defined in the SFP -8472. The serial ID information of the SFP modules and Digital Diagnostic Monitor parameters can be accessed through the I^2C interface at address A0h and A2h. The memory is mapped in Table 1. Detailed ID information (A0h) is listed in Table 2. And the DOM specification at address A2h. For more details of the memory map and byte definitions, please refer to the SFF-8472, "Digital Diagnostic Monitoring Interface for Optical Transceivers". The DOM parameters have been internally calibrated.

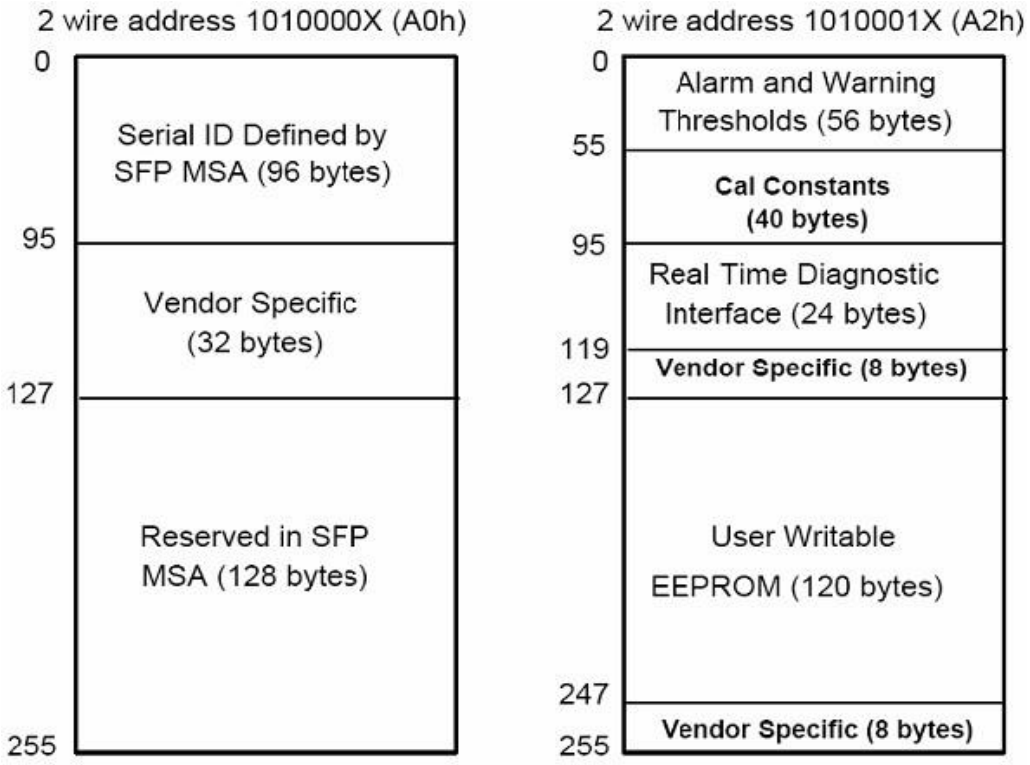

Table 1 - Digital Diagnostic Memory Map (Specific Data Field Descriptions)

Data Address	Length (Byte)	Name of Length	Description and Contents
BASE ID FIELDS			
0	1	Identifier	Type of Serial transceiver (03h=SFP)
1	1	Reserved	Extended identifier of type serial transceiver (04h)
2	1	Connector	Code of optical connector type (07=LC)
3-10	8	Transceiver	25GBase-SR
11	1	Encoding	64B/66B
12	1	BR, Nominal	Nominal baud rate, unit of 100Mbps
13-14	2	Reserved	(0000h)
15	1	Length (9um)	Link length supported for 9/125um fibre, units of 100m
16	1	Length (50um)	Link length supported for 50/125um fibre, units of 10m
17	1	Length (62.5um)	Link length supported for 62.5/125um fibre, units of 10m
18	1	Length (Copper)	Link length supported for copper, units of meters
19	1	Reserved	
20-35	16	Vendor Name	SFP vendor name: ATGBICS
36	1	Reserved	
37-39	3	Vendor OUI	SFP transceiver vendor OUI ID
40-55	16	Vendor PN	Part Number: “SFP-25G-SR-X” (ASCII)
56-59	4	Vendor rev	Revision level for part number
60-62	3	Reserved	
63	1	CCID	Least significant byte of sum of data in address 0-62
EXTENDED ID FIELDS			
64-65	2	Option	Indicates which optical SFP signals are implemented (001Ah = LOS, TX_FAULT, TX_DISABLE all supported)
66	1	BR, max	Upper bit rate margin, units of %
67	1	BR, min	Lower bit rate margin, units of %
68-83	16	Vendor SN	Serial number (ASCII)
84-91	8	Date code	OEM’s Manufacturing date code
92-94	3	Reserved	
95	1	CCEX	Check code for the extended ID Fields (addresses 64 to 94)
VENDOR SPECIFIC ID FIELDS			
96-127	32	Readable	OEM specific date, read only
128-255	128	Reserved	Reserved for SFF-8079

Table 2 - EEPROM Serial ID Memory Contents (A0h)

DIGITAL DIAGNOSTIC MONITOR CHARACTERISTICS

Data Address	Parameter	Accuracy	Unit
96-97	Transceiver Internal Temperature	±3.0	°C
98-99	VCC3 Internal Supply Voltage	±3.0	%
100-101	Laser Bias Current	±10	%
102-103	Tx Output Power	±3.0	dBm
104-105	Rx Input Power	±3.0	dBm

REGULATORY COMPLIANCE

The SFP-25G-SR-X complies with international Electromagnetic Compatibility (EMC) and international safety requirements and standards (see details in Table following).

Electrostatic Discharge (ESD) to the Electrical Pins	MIL-STD-883E Method 3015.7	Class 1(>1000 V)
Electrostatic Discharge (ESD) to the Duplex LC Receptacle	IEC 61000-4-2 GR-1089-CORE	Compatible with standards
Electromagnetic Interference (EMI)	FCC Part 15 Class B EN55022 Class B (CISPR 22B) VCCI Class B	Compatible with standards
Laser Eye Safety	FDA 21CFR 1040.10 and 1040.11 EN60950, EN (IEC) 60825-1,2	Compatible with Class 1 laser product.

RECOMMENDED CIRCUIT

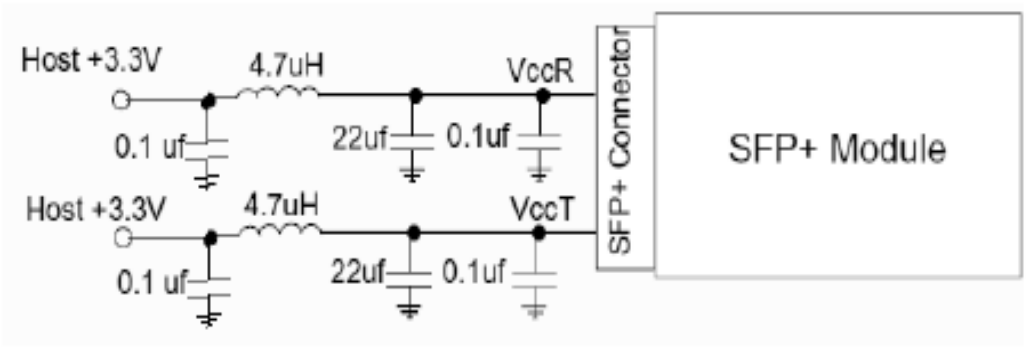

Recommended Host Board Power Supply Circuit

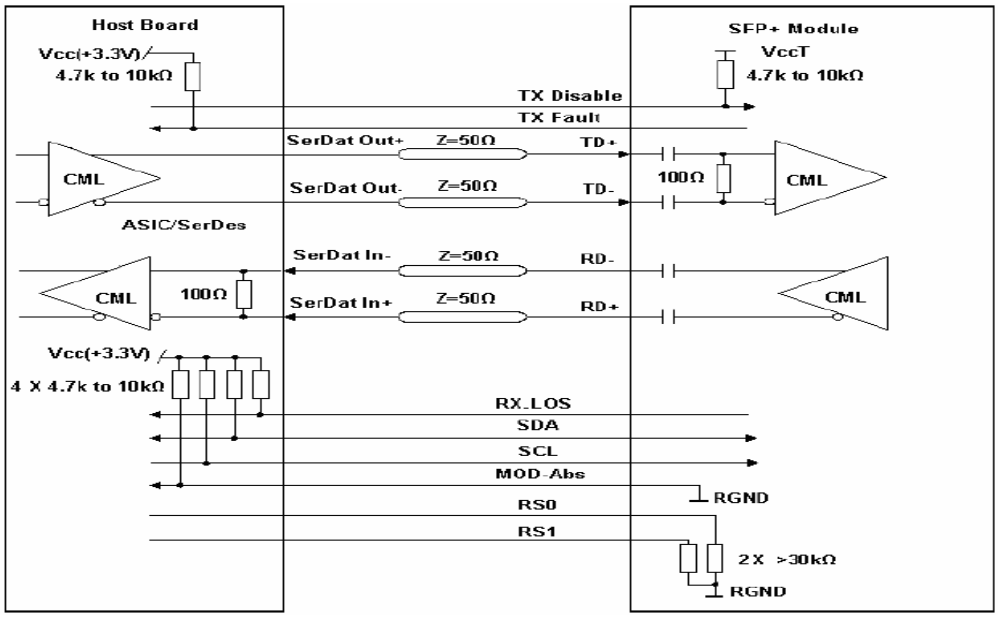

Recommended High-speed Interface Circuit

MECHANICAL DIMENSIONS (UNIT: mm)

