

LED MR16

7MR16/LED/830/F25/DIM 12V 10/1FB

Philips LED MR-16 lamps with single optic technology provide the look and color quality of traditional halogens while using a fraction of the energy. A perfect fit for spot lighting, they are compatible with most existing fixtures with MR16 GU5.3 holders and are designed as a retrofit replacement for halogen or incandescent spots.

Product data

General Information	
Cap-Base	GU5.3 [GU5.3]
Nominal lifetime	25,000 hour(s)
Switching Cycle	50,000
Lighting Technology	LED
EU RoHS compliant	Yes

Light Technical	
Color Code	830 [CCT of 3000K]
Beam Angle (Nom)	25 degree(s)
Luminous Flux	515 lm
Luminous Intensity (Nom)	2,500 cd
Color Designation	White (WH)
Correlated Color Temperature (Nom)	3000 K
Luminous Efficacy (rated) (Nom)	73.00 lm/W
Color Consistency	<4
Color rendering index (CRI)	80
LLMF At End Of Nominal Lifetime (Nom)	70 %

Operating and Electrical	
Line Frequency	- Hz
Input Frequency	- Hz
Power Consumption	7 W
Lamp Current (Nom)	650 mA
Wattage Equivalent	50 W
Starting Time (Nom)	0.5 s
Warm-up time to 60% light	0.5 s
Power Factor (Fraction)	0.7
Voltage (Nom)	ac electronic 12 V

Temperature	
T-Case Maximum (Nom)	194 °F

Controls and Dimming	
Dimmable	Only with specific dimmers

Mechanical and Housing	
Bulb Finish	Clear
Bulb Material	Aluminum
Bulb Shape	MR16
UL Wet/ damp/ dry location	Damp location

Approval and Application	
Suitable For Accent Lighting	Yes

LED MR16

Energy Certifications	Energy Star
T20 compliant	No

Application Conditions	
can it be used in closed luminaires	Yes

Product Data	
Order product name	7MR16/LED/830/F25/DIM 12V 10/1FB
Full product name	7MR16/LED/830/F25/DIM 12V 10/1FB

Order code	573873
Material Nr. (12NC)	929003076304
Numerator - Quantity Per Pack	1
EAN/UPC - Product/Case	046677573874
Numerator - Packs per outer box	10
EAN/UPC - Case	50046677573879

Dimensional drawing

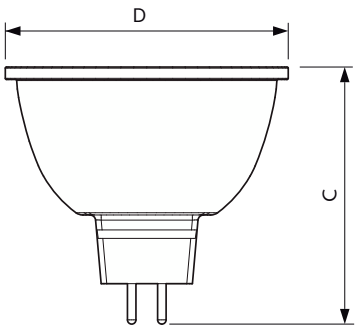

Product	D	C
7MR16/LED/830/F25/DIM 12V 10/1FB	2 inch	1-7/8 inch

Photometric data

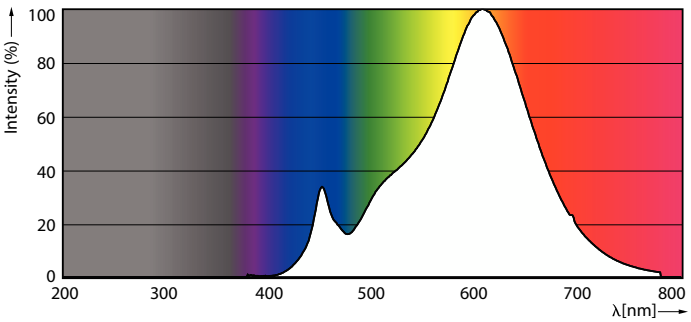

Spectral Power Distribution Colour - 7MR16/LED/830/F25/DIM 12V 10/1FB

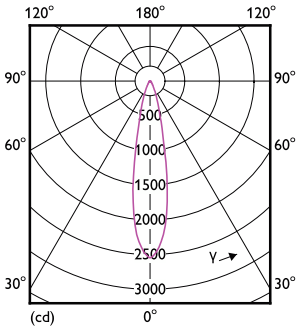

Light Distribution Diagram - 7MR16/LED/830/F25/DIM 12V 10/1FB

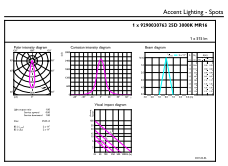

Accent Lighting Spots - 7MR16/LED/830/F25/DIM 12V 10/1FB

LED MR16

Lifetime

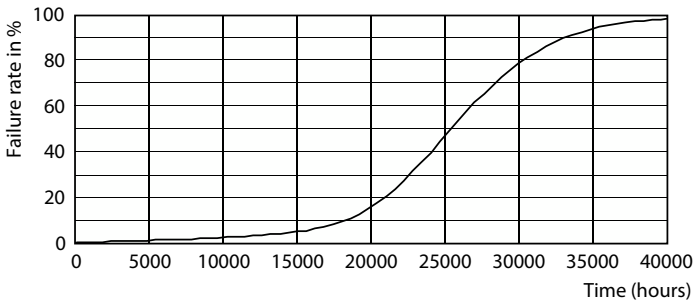

Life Expectancy Diagram - 7MR16/LED/830/F25/DIM 12V 10/1FB

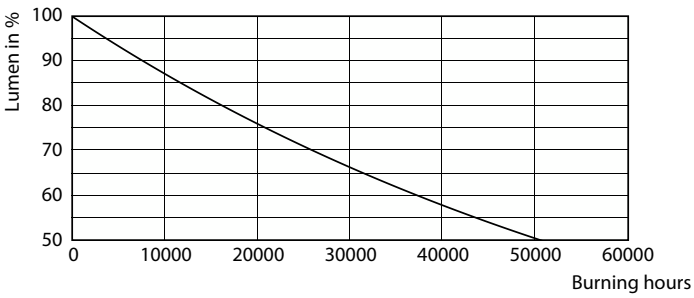

Lumen Maintenance Diagram - 7MR16/LED/830/F25/DIM 12V 10/1FB

© 2023 Signify Holding All rights reserved. Signify does not give any representation or warranty as to the accuracy or completeness of the information included herein and shall not be liable for any action in reliance thereon. The information presented in this document is not intended as any commercial offer and does not form part of any quotation or contract, unless otherwise agreed by Signify. Philips and the Philips Shield Emblem are registered trademarks of Koninklijke Philips N.V.