OptiPlex

Antenna Installation Guide

June 2025
Rev. A01

DELL Technologies

Notes, cautions, and warnings

NOTE: A NOTE indicates important information that helps you make better use of your product.

CAUTION: A CAUTION indicates either potential damage to hardware or loss of data and tells you how to avoid the problem.

WARNING: A WARNING indicates a potential for property damage, personal injury, or death.

© 2022-2025 Dell Inc. or its subsidiaries. All rights reserved. Dell Technologies, Dell, and other trademarks are trademarks of Dell Inc. or its subsidiaries. Other trademarks may be trademarks of their respective owners.

Contents

Chapter 1: Before you begin **4**

Chapter 2: Recommended tools **5**

Chapter 3: OptiPlex Tower Antenna **6**

Chapter 4: OptiPlex Small Form Factor Antenna **8**

Chapter 5: OptiPlex Micro Antenna **10**

Chapter 6: Antenna Placement **12**

Chapter 7: SMA antenna **14**

Chapter 8: Getting help **15**

Contacting Dell 15

1

Before you begin

Steps

1. Save and close all open files and exit all open applications.
2. Shut down your system: Click **Start** > **Power** > **Shut down**.

   NOTE: If you are using a Linux operating system, see the documentation of your operating system for shut-down instructions.

3. Disconnect your system and all attached devices from their electrical outlets.
4. Disconnect all attached network devices and peripherals, such as keyboard, mouse, and monitor from your system.

   CAUTION: To disconnect a network cable, first unplug the cable from your system and then unplug the cable from the network device.

5. If the system unit or the adapter is being installed on the monitor:
   a. Disconnect the power and all the display cables from the monitor.
   b. Remove the stand from the monitor and place the monitor on a clean and soft surface.

2

Recommended tools

The procedures in this document may require the following tool:

- Phillips screwdriver #2

3

OptiPlex Tower Antenna

Steps

1. Follow the instructions in Before you begin.
2. Align and connect the antenna cables to the SMA connectors on the chassis.
3. Tighten the bolts to secure the antenna cables to the SMA connectors on the chassis.

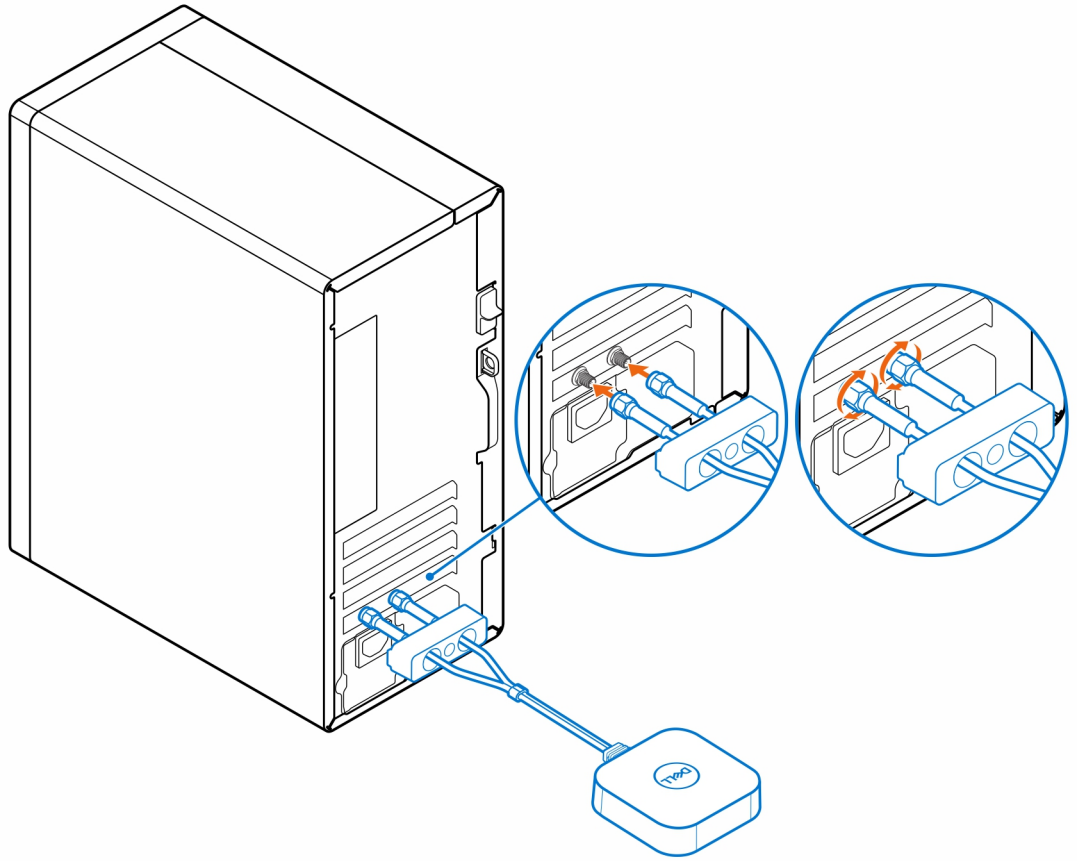

4. Slide the SMA cover over the antenna cables.
5. Align the tabs on the SMA cover with the slots on the chassis.
6. Push the SMA cover towards the chassis until it clicks into place.
7. Tighten the captive screw to secure the SMA cover to the chassis.

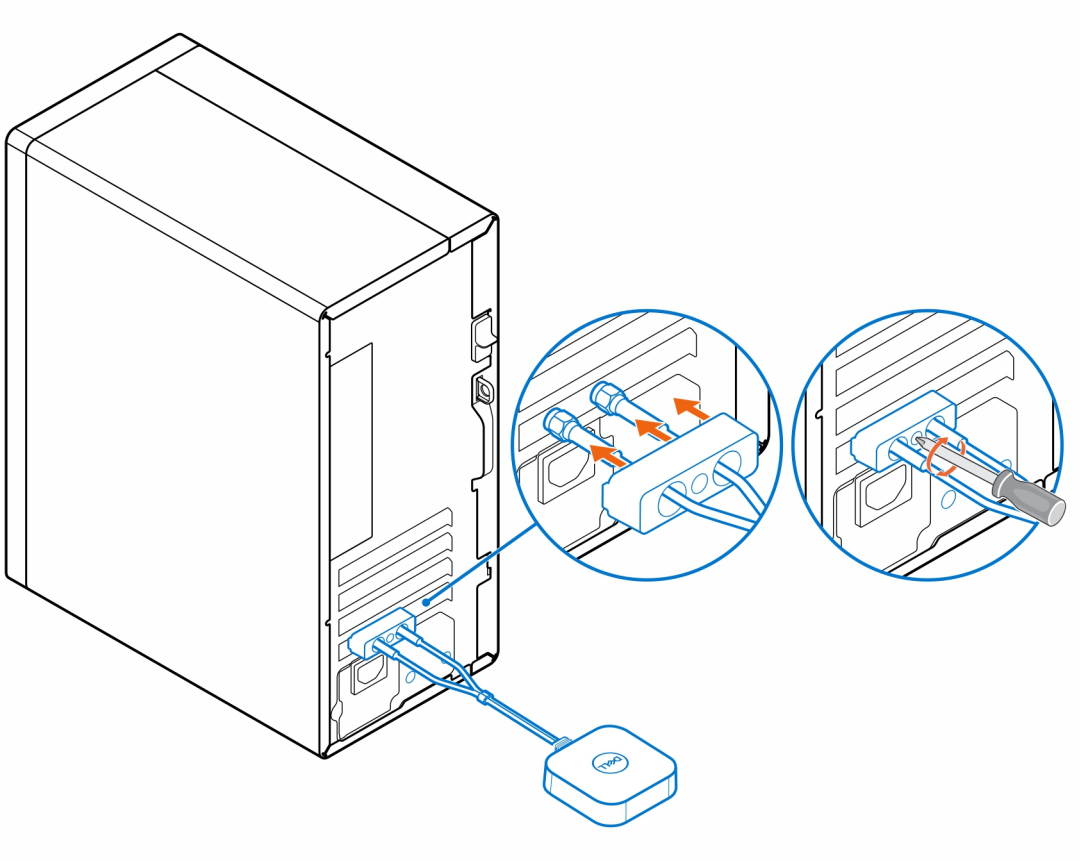

4

OptiPlex Small Form Factor Antenna

Steps

1. Follow the instructions in Before you begin.
2. Align and connect the antenna cables to the SMA connectors on the chassis.
3. Tighten the bolts to secure the antenna cables to the SMA connectors on the chassis.

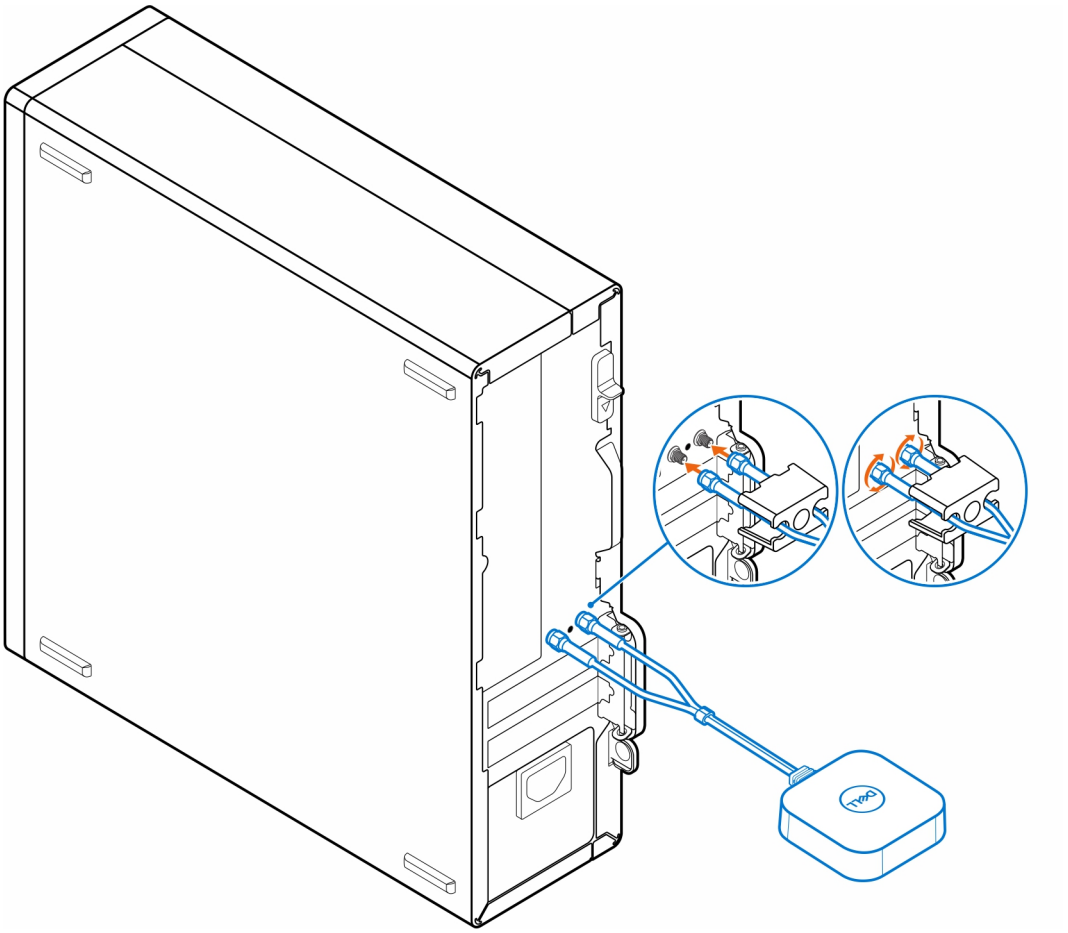

4. Slide the SMA cover over the antenna cables.
5. Align the tabs on the SMA cover with the slots on the chassis.
6. Push the SMA cover towards the chassis until it clicks into place.
7. Tighten the captive screw to secure the SMA cover to the chassis.

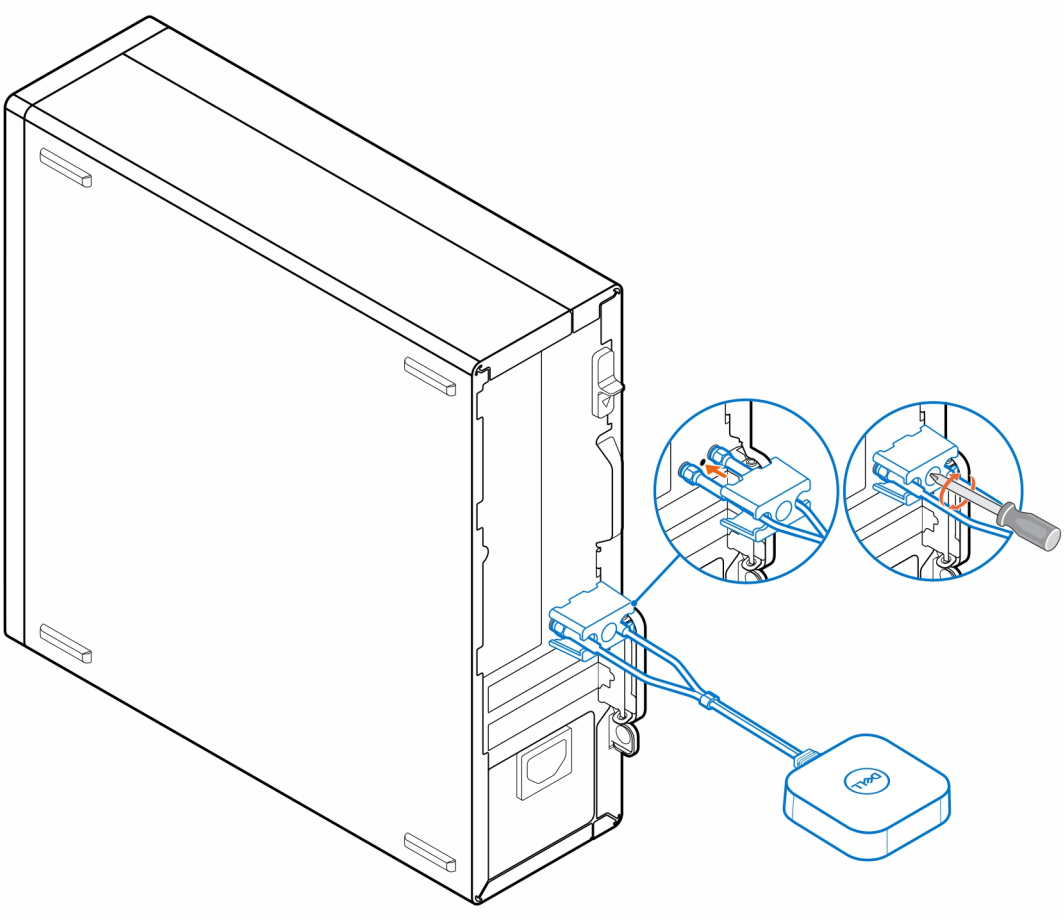

5

OptiPlex Micro Antenna

Steps

1. Follow the instructions in Before you begin.
2. Align and connect the antenna cables to the SMA connectors on the chassis.
3. Tighten the bolts to secure the antenna cables to the SMA connectors on the chassis.

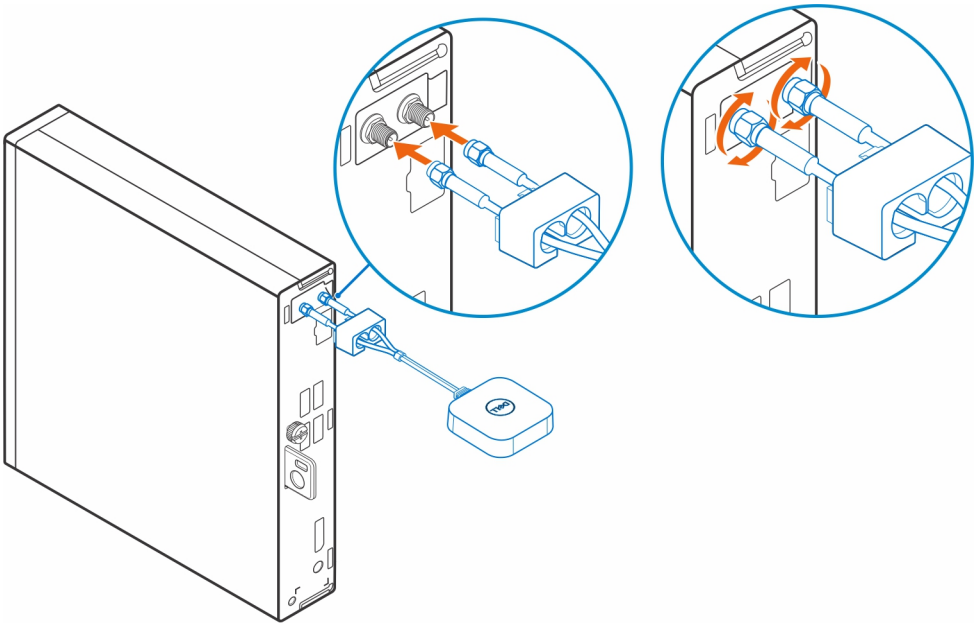

4. Slide the SMA cover over the antenna cables.
5. Align the tabs on the SMA cover with the slots on the chassis.
6. Push the SMA cover towards the chassis until it clicks into place.
7. Tighten the captive screw to secure the SMA cover to the chassis.

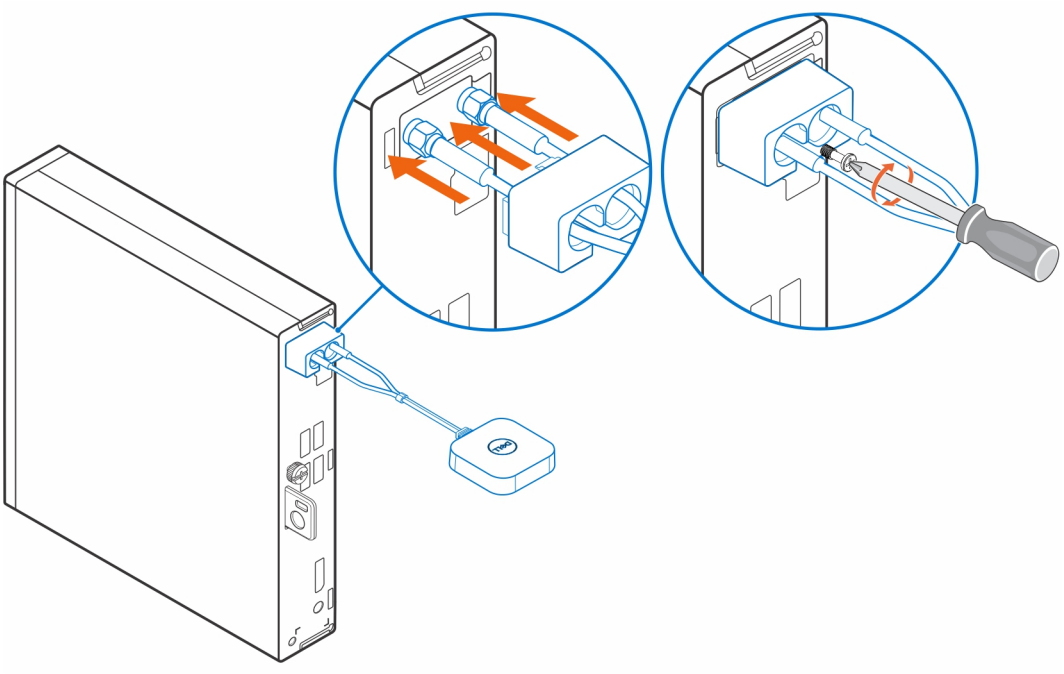

6

Antenna Placement

Place the antenna in a suitable location.

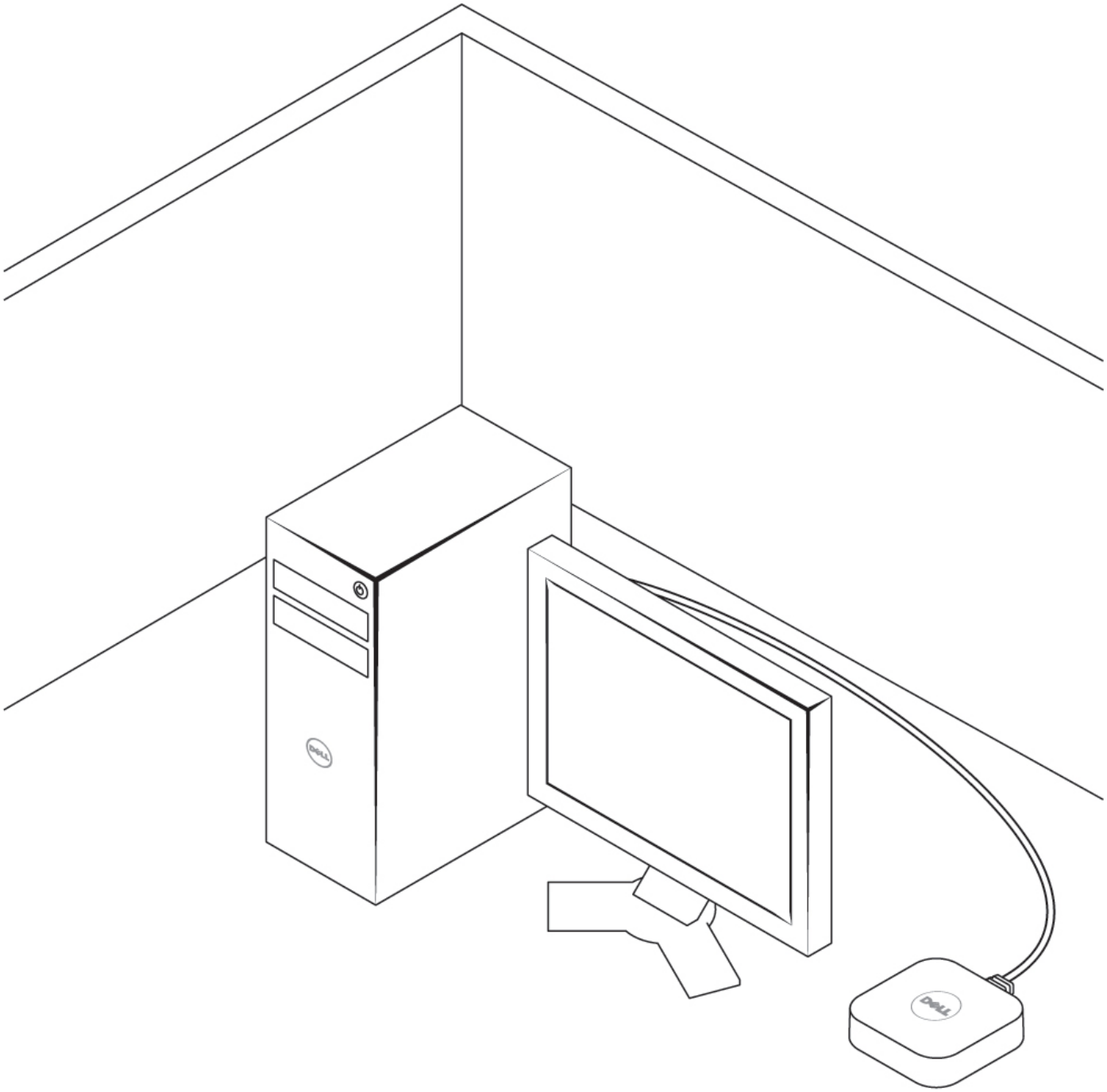

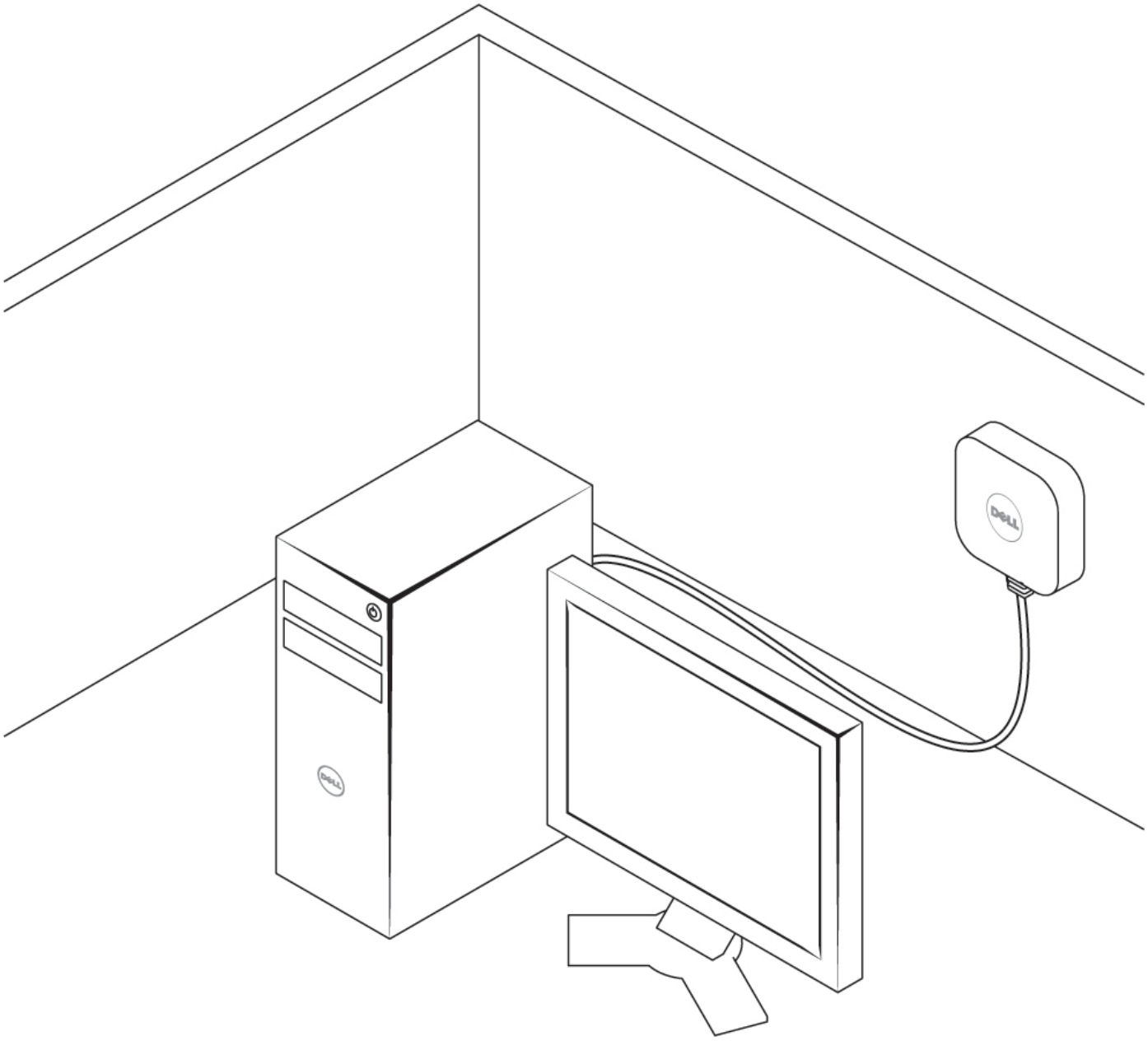

7

SMA antenna

For SMA antenna removal and installation procedures, search for OptiPlex Service Manual at www.dell.com/support.

8

Getting help

Contacting Dell

Prerequisites

NOTE: If you do not have an active Internet connection, you can find contact information on your purchase invoice, packing slip, bill, or Dell product catalog.

About this task

Dell provides several online and telephone-based support and service options. Availability varies by country and product, and some services may not be available in your area. To contact Dell for sales, technical support, or customer service issues:

Steps

1. Go to **Dell.com/support**.
2. Select your support category.
3. Verify your country or region in the **Choose a Country/Region** drop-down list at the bottom of the page.
4. Select the appropriate service or support link based on your need.