HK634200XB Built-in Hob





Exact heat for impeccable results

Our induction hobs have sensitive touch controls that take you from cool to hot – and back – immediately, letting you make precise changes to make your dish perfectly delicious. Like when you need intense heat for pan-searing steak. And because such precise heat



Quicker heat for extra speed

This hob's power booster function is specially designed to provide you with a quick, intense heat up that gets you cooking fast.



Stay safe and make full use of any residual heat

The residual heat indicator lets you know when your hobs are still hot. Not only can you stay safe, but you can also use the heat to keep food warm.

More Benefits :

• Induction heating for a wipe-clean cooking surface

• Adjustable minute minder (up to 99 minutes)

• Child safety device – ensures the hob stays off

Features :

• Automax function
•Stop &Go with keep warm setting
•Residual heat indicators
•Powerful booster
•15 stage digital power level displays
•Child safety control lock
•Control lock
•Auto safety switch off
•Front left: 1 large induction zone with booster
•Front right: 1 small induction zone with booster
•Rear left: 1 medium induction zone with booster
•Rear right: 1 medium induction zone with booster

Technical Specs :

• ProductTitle : OptiFix™ Integrated 60cm Induction Hob, Black with Stainless Steel Trim
•Width (mm) : 576
•Depth (mm) : 516
•Built In Height (mm) : 55
•Voltage : 220-240
•Net Weight : 10.84
•Colour : Stainless Steel
•Colour : Black
•ColorEnglish : Black
•Bar Code : 7332543161614

Product Description :

The quickest way to cook, this 60cm induction hob heats the pan and nothing else. It's wipe-clean and cool-touch, with 4 circular large or small zones, so you can use any pan, anywhere, instantly — less energy required, and LCD up-down touch controls keep your finger on the cooking.

HK634200XB Built-in Hob

PSGBHO130D000024

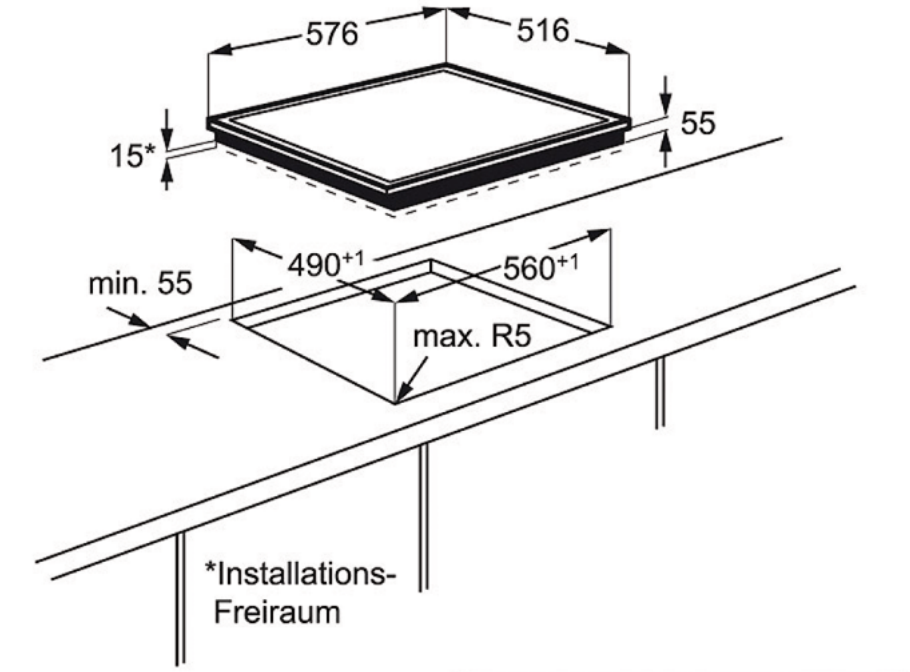

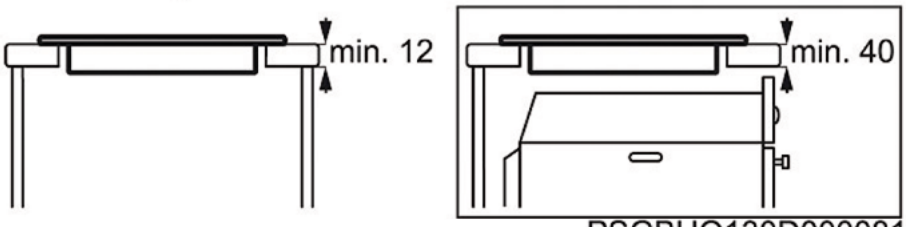

PSGBHO130D000081

