OMK58CU1SX

12NC: 859991660070

GTIN (EAN) code: 8003437939365

SENSING THE DIFFERENCE



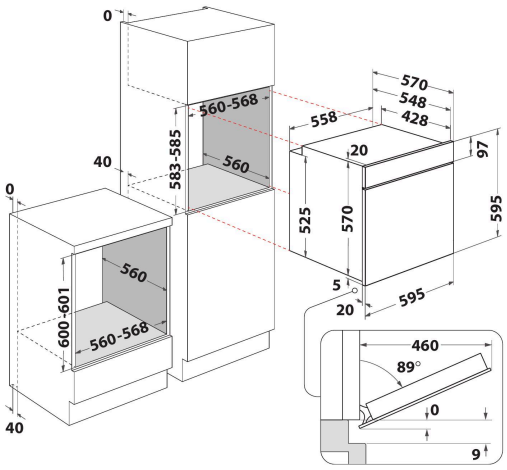

- Catalytic cleaning system
- Energy class A+
- Cavity 71 L
- Cook3
- Defrost function
- Forced Air Fan Cooking
- Grill
- Easy Clean Enamel Interior
- Turbo grill function
- Maxi cooking
- Pizza/Bread function
- Eco Forced Air
- Soft closing door
- Rising
- Special functions
- Tilting Grill for easy cleaning
- Conventional Cooking

Whirlpool built in electric oven: inox color - OMK58CU1SX

This Whirlpool built in Oven features: advanced electric technology allowing you to cook dishes saving energy. Innovative Cook3 function, that allows you to cook up to three separate dishes at the same time, without the risk of aromas mixing. Oven door with soft-close design, for increased ease of use.

Multifunction 8
Multiple cooking methods. The Multifunction 8 feature offers flexible cooking options, to ensure perfect results, whatever the recipe.

Cook3
No aroma mixing. With the innovative Cook3 function, you can cook up to three separate dishes at the same time, without the risk of aromas mixing.

Forced Air
Seal in the taste. Thanks to the Forced Air technology, preheated air is circulated inside your Oven using an innovative convection system, giving you moist, juicy cooking results.

Auto Bread
Bake different types of breads, effortlessly. Once the function is selected by turning the knob, the time and temperature are set automatically. The oven stops after 1 hour.

Auto Pastry
Easily bake your pastry dishes. Once the function is selected by turning the knob, the time and temperature are set automatically. The oven stops after 45 minutes.

Catalytic
Self-cleaning panels. The catalytic panels fitted inside the oven take care of any spills and splashes, eliminating them while cooking.

Standard cavity
This Whirlpool Oven features a standard-size cavity.

Energy class
Outstanding energy savings. Ovens with an A/ A+ energy rating offer an excellent level of energy efficiency, ensuring lower consumption and saving you money on your energy bills.

Maxi Cooking
Perfectly cook big portions of food. Ideal for big roasts.

Pizza
Get the best results and a crispy base for your pizzas.

OMK58CU1SX

12NC: 859991660070

GTIN (EAN) code: 8003437939365

Whirlpool
SENSING THE DIFFERENCE

MAIN FEATURES

Product group	Oven
Commercial code	OMK58CU1SX
Main colour of product	Inox
Construction type	Built-in
Type of control	Electronic
Type of control settings	-
Are any hobs controls integrated?	No
Which kind of hobs can be controlled?	-
Automatic programmes	Yes
Current (A)	13
Voltage (V)	220-240
Frequency (Hz)	50/60
Length of Electrical Supply Cord (cm)	100
Plug type	No
Depth with open door 90 degree (mm)	-
Height of the product	595
Width of the product	595
Depth of the product	551
Minimum niche height	0
Minimum niche width	0
Niche depth	0
Net weight (kg)	27.55
Usable volume (of cavity)	71
Integrated Cleaning system	Catalytic partial
Grids of the cavity	1
Trays	2

TECHNICAL FEATURES

Timer	Yes
Time control	Electronic
Time-setting options	Stop
Safety device	-
Interior light	Yes
Number of interior lights of the cavity	1
Position of interior lights of the cavity	Front left
Oven guides of the cavity	Telescopic
Probe of the cavity	No

PERFORMANCES

Energy input	Electric
Type of energy of the cavity	Electricity
Energy efficiency class - NEW (2010/30/EU)	A+
Energy consumption per cycle conventional - NEW (2010/30/EU)	0.89
Energy consumption per cycle forced air convection - NEW (2010/30/EU)	0.69

