H-12U Anti-Vandal Cabinet



H-12U Anti-Vandal Cabinet



Technical Details

Features
19” Compatibility
Anti-Vandal Protection
Anti-Vandal Lock

Dimensions
Size: 12U
Width : 600 mm
Height : 738 mm
Depth : 600 mm

Material
2.5 mm Steel

Appearance
Finish Surface : Powder Coating
Color : RAL7035

H-12U Anti-Vandal Cabinet

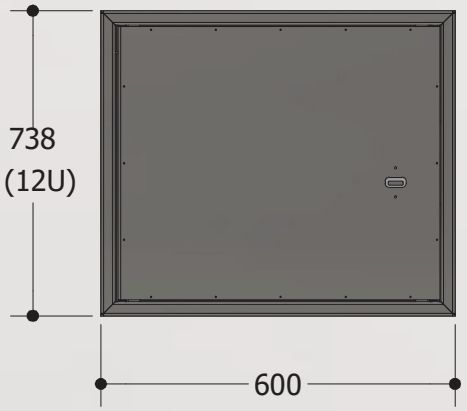

Front View

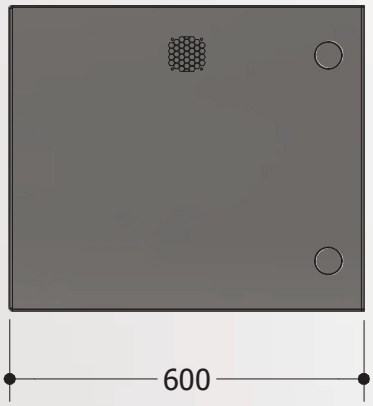

Side View

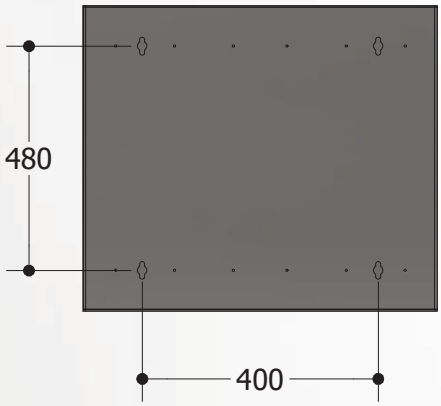

Rear View

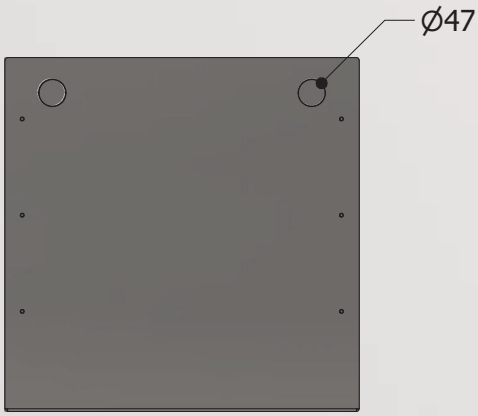

Top View

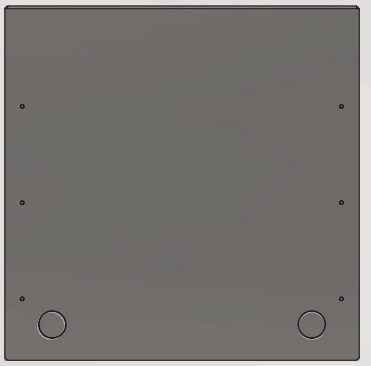

Bottom View

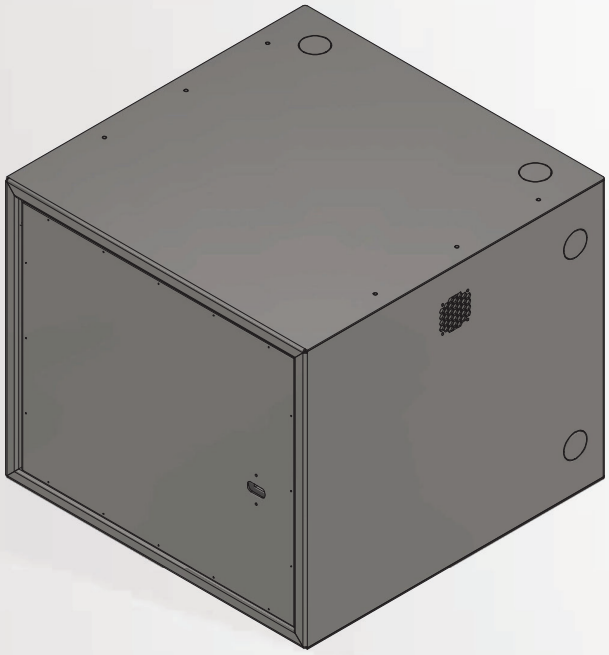

Front Isometric View

H-12U Anti-Vandal Cabinet

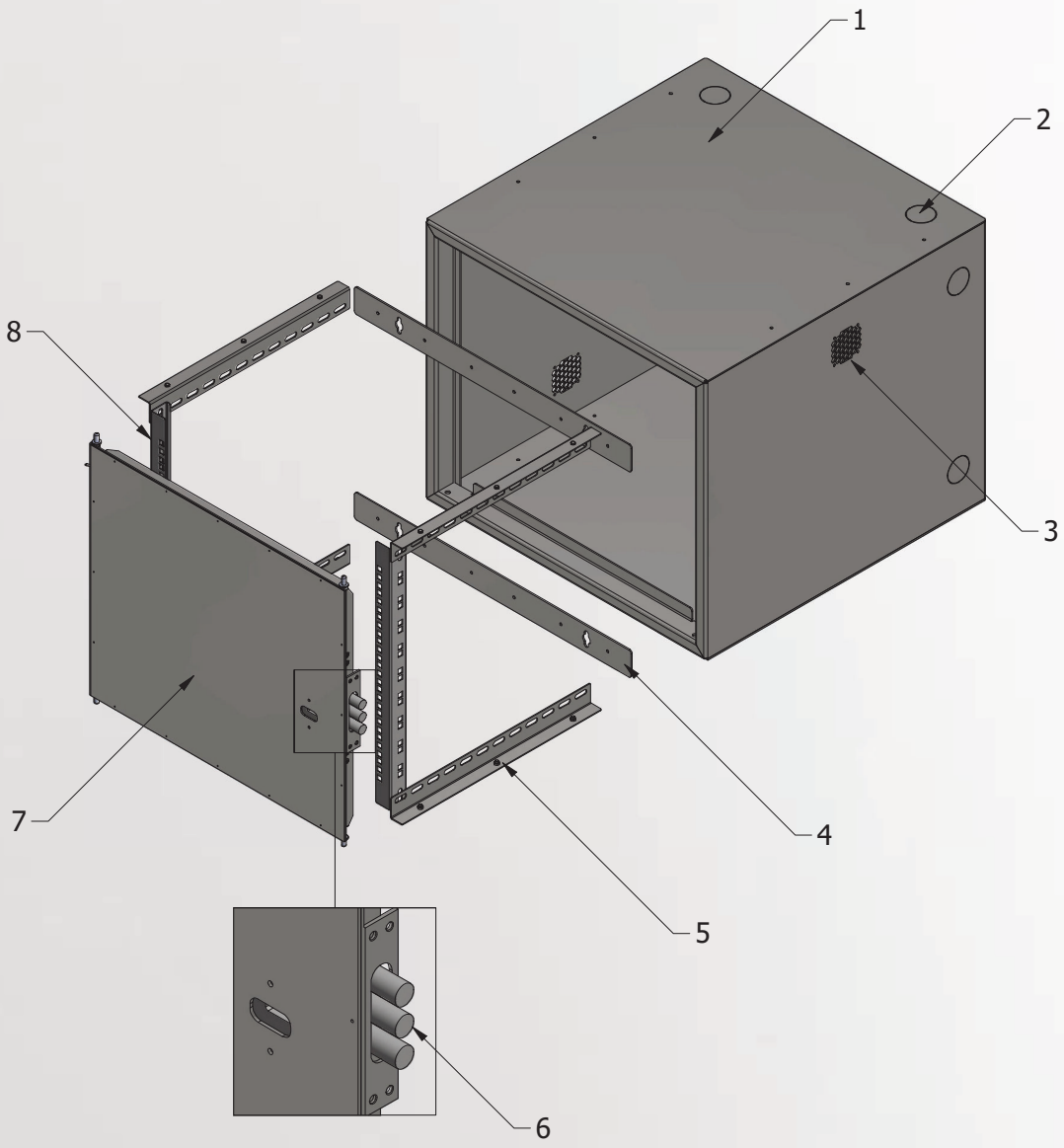

COMPONENT LIST	
NO	PART NAME
1	Cabinet Body
2	Cable Entry
3	Honey Comb Ventilation
4	Wall Support Bar
5	Horizontal Support Bar
6	Anti-Vandal Locking Mechanism
7	Front Door
8	19" Device Mounting Rail