Product Datasheet

ET7302-AOC-30M-C

Edgecore® Compatible 25Gb/s SFP28 Active Optical Cable, Active, 30m

FEATURES

- Electrical interface compliant to SFF-8431
- 850nm VCSEL laser and PIN photo-detector
- Low power consumption of max 3.5W
- Maximum link length of 70m on OM3 MMF and 100m on OM4 MMF
- Digital diagnostics functions are available via the I2C interface
- Hot pluggable electrical interface
- RoHS compliant
- 0 to 70°C case temperature operating range

APPLICATIONS

- 25GBASE-SR Ethernet
- InfiniBand QDR, SDR, DDR
- Servers, switches, storage and host card adapters

DESCRIPTION

ATGBICS ET7302-AOC-30M is a Single-Channel, Pluggable, Fiber-Optic SFP28 for 25 Gigabit Ethernet and Infiniband EDR Applications. It is a high-performance module for short-range data communication and interconnect applications which operate at 25.78125 Gbps up to 70 m using OM3 fiber or 100 m using OM4 fiber. This module is designed to operate over multimode fiber systems using a nominal wavelength of 850nm. The electrical interface uses a 20 contact edge type connector.

ATGBICS® All rights reserved. EOE

ATGBICS®

Product Datasheet

Absolute Maximum Ratings

Parameter	Symbol	Min	Max	Unit
Storage Temperature	TST	-20	85	℃
Relative Humidity	RH	0	85	%
Case Operating Temperature	TOPC	0	70	℃
Supply Voltage	VCC	-0.3	3.6	V

Recommended Operating Conditions

Parameter	Symbol	Min	Typical	Max	Unit
Operating Case temperature	TA	0		+70	℃
Supply Voltage	VCC	3.13	3.3	3.47	V
Supply current	Icc			300	mA
Channel Data Rate	Dr		25.78125		Gbps

Transmitter

Measured condition: Channel Data Rate 25.78125Gbps, $VR_{CC}R$=3.3V, PRBS31, Case Operating Temperature 0~70℃

Parameter	Symbol	Min	Typical	Max	Unit
Input differential impedance	Zin	90	100	110	Ω
Differential Data Input Swing	Vin PP	300		1100	mV
Transmit Enable Voltage	VEN			0.8	V
Transmit Disable Voltage	VD	2.0			V
Average launch power	PAVG	-7.5	-1	+2.5	dBm
Extinction Ratio	ER	2.0			dB
Centre Wavelength	λc	840	850	860	nm

ATGBICS® All rights reserved. EOE

ATGBICS®

Product Datasheet

Receiver

Measured condition: Channel Data Rate 25.78125Gbps, $VR_{CC}R$=3.3V, PRBS31, Case Operating Temperature 0~70℃

Parameter	Symbol	Min	Typical	Max	Unit
Center Wavelength	λc	840	850	860	nm
Differential Data Output Swing	Vout PP	500		800	mV
Bit Error Rate	BER			E-12	
Receiver Overload	PinMAX	2.5			dBm
Output Differential Impedance	Zout	90	100	110	ohm
LOS Fault	V_{OH}	2.4			V
LOS Normal	V_{OL}			0.4	V

ATGBICS® All rights reserved. EOE

Product Datasheet

Pin Descriptions

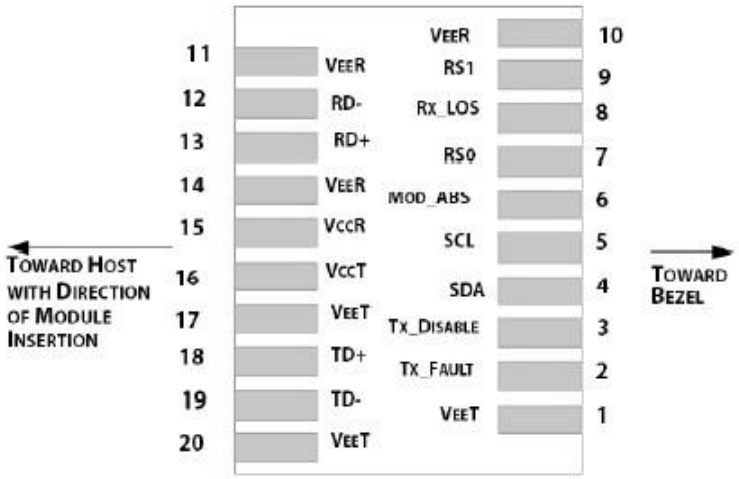

PIN	Name	Function/Description
1	VeeT	Transmitter Ground
2	Tx_Fault	Transmitter Fault - High indicates a fault condition
3	Tx_Disable	Transmitter Disable – High or open disables the transmitter
4	SDA	Two wire serial interface Data Line
5	SCL	Two wire serial interface Clock Line
6	MOD_ABS	Module Absent (Output), connected to VeeT or VeeR in the module
7	RS0	Rx Rate Select, not used
9	RS1	Tx Rate Select, not used
10	VeeR	Receiver Ground
11	VeeR	Receiver Ground
12	RD-	Receiver Inverted DATA out
13	RD+	Receiver Non-inverted DATA out
14	VeeR	Receiver Ground
15	VccR	Receiver Power Supply
16	VccT	Transmitter Power Supply
17	VeeT	Transmitter Ground
18	TD+	Transmitter Non-Inverted DATA in
19	TD-	Transmitter Inverted DATA in
20	VeeT	Transmitter Ground

ATGBICS® All rights reserved. EOE

Product Datasheet

Module Power Supply Tolerance Filtering

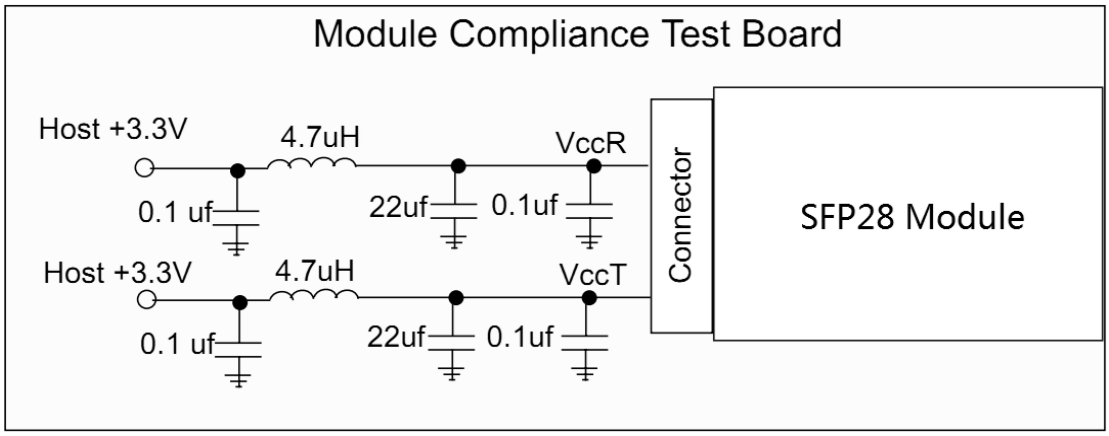

Mechanical Design Diagram

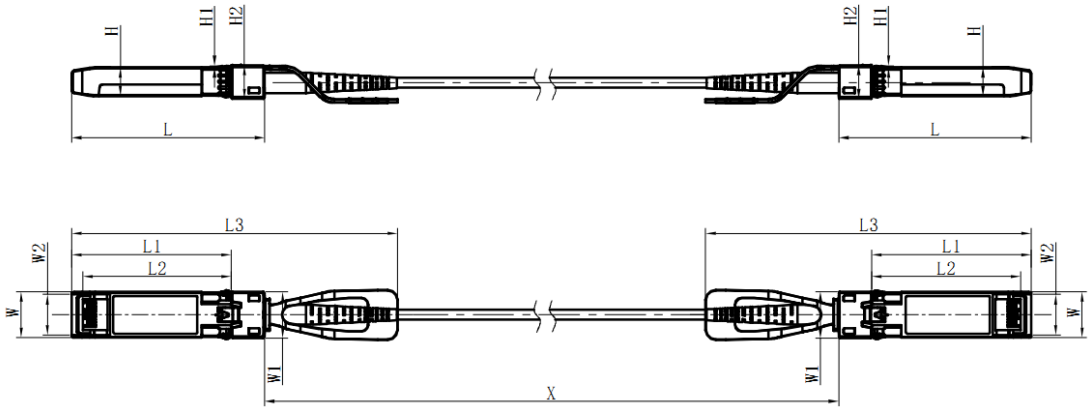

Unit: mm

	L	L1	L2	L3	W	W1	W2	H	H1	H2
MAX	57.75	48.0	44.65	102.5	13.75	14.0	12.25	8.65	0.55	10.4
Typical	57.55	47.8	44.45	101.5	13.65	13.9	12.15	8.55	0.5	10.2
MIN	57.35	47.6	44.25	100.5	13.55	13.8	12.05	8.45	0.45	10.0

Length	Note
3m	OM3 Round Cable
5m	OM3 Round Cable
10m	OM3 Round Cable
20m	OM3 Round Cable
30m	OM3 Round Cable
50m	OM3 Round Cable
70m	OM3 Round Cable
100m	OM4 Round Cable

ATGBICS® All rights reserved. EOE