AEG

aeg.com/register

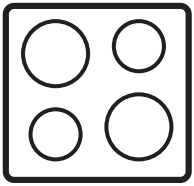

**HDB95623NB**

**EN** User Manual | **Hob**

**Welcome to AEG! Thank you for choosing our appliance.**

Get usage advice, brochures, trouble shooter, service and repair information:
**www.aeg.com/support**

Subject to change without notice.

## CONTENTS


**1.** SAFETY INFORMATION..... 2
**2.** SAFETY INSTRUCTIONS..... 5
**3.** INSTALLATION..... 8
**4.** PRODUCT DESCRIPTION..... 14
**5.** DAILY USE..... 16
**6.** HINTS AND TIPS..... 20
**7.** CARE AND CLEANING..... 23
**8.** TROUBLESHOOTING..... 25
**9.** TECHNICAL DATA..... 27
**10.** ENERGY EFFICIENCY..... 28
**11.** ENVIRONMENTAL CONCERNS..... 29


# 1. ⚠ SAFETY INFORMATION

Before the installation and use of the appliance, carefully read the supplied instructions. The manufacturer is not responsible for any injuries or damage that are the result of incorrect installation or usage. Always keep the instructions in a safe and accessible location for future reference.

## 1.1 Children and vulnerable people safety

- This appliance can be used by children aged from 8 years and above and persons with reduced physical, sensory or mental capabilities or lack of experience and knowledge if they have been given supervision or instruction concerning the use of the appliance in a safe way and understand the hazards involved. Children of less than 8 years of age and persons with very extensive and complex disabilities shall be kept away from the appliance unless continuously supervised.
- Children should be supervised to ensure that they do not play with the appliance.

- Keep all packaging away from children and dispose of it appropriately.
- WARNING: The appliance and its accessible parts become hot during use. Keep children and pets away from the appliance when in use and when cooling down.
- If the appliance has a child safety device, it should be activated.
- Children shall not carry out cleaning and user maintenance of the appliance without supervision.

## 1.2 General Safety

- This appliance is for cooking purposes only.
- This appliance is designed for single household domestic use in an indoor environment.
- This appliance may be used in, offices, hotel guest rooms, bed & breakfast guest rooms, farm guest houses and other similar accommodation where such use does not exceed (average) domestic usage levels.
- WARNING: The appliance and its accessible parts become hot during use. Care should be taken to avoid touching heating elements.
- WARNING: Unattended cooking on a hob with fat or oil can be dangerous and may result in fire.
- Never use water to extinguish the cooking fire. Switch off the appliance and cover flames with e.g. a fire blanket or lid.
- WARNING: The appliance must not be supplied through an external switching device, such as a timer, or connected to a circuit that is regularly switched on and off by a utility.
- CAUTION: The cooking process has to be supervised. A short term cooking process has to be supervised continuously.
- WARNING: Danger of fire: Do not store items on the cooking surfaces.
- Metallic objects such as knives, forks, spoons and lids should not be placed on the hob surface since they can get hot.

- Do not use the appliance before installing it in the built-in structure.
- Do not use a steam cleaner to clean the appliance.
- After use, switch off the hob element by its control and do not rely on the pan detector.
- If the glass ceramic surface / glass surface is cracked, switch off the appliance and unplug it from the mains. In case the appliance is connected to the mains directly using junction box, remove the fuse to disconnect the appliance from power supply. In either case contact the Authorised Service Centre.
- In case of hotplate glass breakage:
  – shut immediately off all burners and any electrical heating element and isolate the appliance from the power supply,
  – do not touch the appliance surface,
  – do not use the appliance.
- If the supply cord is damaged, it must be replaced by the manufacturer, an authorized Service or similarly qualified persons in order to avoid a hazard.
- Where the appliance is directly connected to the power supply, an all-pole isolating switch with a contact gap is required. Complete disconnection in compliance with the conditions specified in overvoltage category III must be guaranteed. The earth cable is excluded from this.
- When you route the mains cable, make sure that the cable doesn't come into direct contact (for example using insulating sleeving) with parts that can reach temperatures of more than 50°C above room temperature.
- WARNING: Use only hob guards designed by the manufacturer of the cooking appliance or indicated by the manufacturer of the appliance in the instructions for use as suitable or hob guards incorporated in the appliance. The use of inappropriate guards can cause accidents.

# 2. SAFETY INSTRUCTIONS

This appliance is suitable for the following markets: IT

## 2.1 Installation

**⚠ WARNING!**

Only a qualified person must install this appliance.

**⚠ WARNING!**

Risk of injury or damage to the appliance.

- Remove all the packaging.
- Do not install or use a damaged appliance.
- Follow the installation instructions supplied with the appliance.
- Keep the minimum distance from other appliances and units.
- Always take care when moving the appliance as it is heavy. Always use safety gloves and enclosed footwear.
- Seal the cut surfaces of the cabinet with a sealant to prevent moisture from causing swelling.
- Protect the bottom of the appliance from steam and moisture.
- Do not install the appliance next to a door or under a window. This prevents hot cookware from falling from the appliance when the door or the window is opened.
- If the appliance is installed above drawers make sure that the space, between the bottom of the appliance and the upper drawer is sufficient for air circulation.
- The bottom of the appliance can get hot. Install a non-combustible separation panel under the appliance to prevent access to the bottom.
- Make sure that the ventilation space of 2 mm, between the worktop and the front of the below unit, is free. The warranty does not cover damages caused by the lack of an adequate ventilation space.

## 2.2 Electrical Connection

**⚠ WARNING!**

Risk of fire and electric shock.

- All electrical connections should be made by a qualified electrician.
- The appliance must be earthed.
- Before carrying out any operation make sure that the appliance is disconnected from the power supply.
- Make sure that the parameters on the rating plate are compatible with the electrical ratings of the mains power supply.
- Make sure the appliance is installed correctly. Loose and incorrect electricity mains cable or plug (if applicable) can make the terminal become too hot.
- Use the correct electricity mains cable.
- Do not let the electricity mains cable tangle.
- Make sure that a shock protection is installed.
- Use the strain relief clamp on the cable.
- Make sure the mains cable or plug (if applicable) does not touch the hot appliance or hot cookware, when you connect the appliance to a socket.
- Do not use multi-plug adapters and extension cables.
- Make sure not to cause damage to the mains plug (if applicable) or to the mains cable. Contact our Authorised Service Centre or an electrician to change a damaged mains cable.
- The shock protection of live and insulated parts must be fastened in such a way that it cannot be removed without tools.
- Connect the mains plug to the mains socket only at the end of the installation. Make sure that there is access to the mains plug after the installation.
- If the mains socket is loose, do not connect the mains plug.
- Do not pull the mains cable to disconnect the appliance. Always pull the mains plug.
- Use only correct isolation devices: line protecting cut-outs, fuses (screw type

fuses removed from the holder), earth leakage trips and contactors.
- The electrical installation must have an isolation device which lets you disconnect the appliance from the mains at all poles. The isolation device must have a contact opening width of minimum 3 mm.

## 2.3 Gas connection

**⚠ CAUTION!**

When using a gas cylinder, always keep it on a flat horizontal surface (with the gas valve on top).

- All gas connections must be made by a qualified person.
- Before installation, make sure that the local distribution conditions (nature of the gas and gas pressure) and the adjustment of the appliance are compatible.
- Make sure that there is air circulation around the appliance.
- The information about the gas supply is on the rating plate.
- This appliance is not connected to a device, which evacuates the products of combustion. Make sure to connect the appliance according to current installation regulations. Follow the requirements for adequate ventilation.

## 2.4 Use

**⚠ WARNING!**

Risk of injury, burns and electric shock.

**⚠ CAUTION!**

The use of a gas cooking appliance results in the production of heat, moisture and products of combustion in the room in which it is installed. Ensure that the kitchen is well ventilated especially when the appliance is in use.
Prolonged intensive use of the appliance may require additional ventilation, for example the increasing of mechanical ventilation where present, additional ventilation to safely remove the products of combustion to outside (external) air whilst also providing room air changes with additional ventilation. Consult a qualified person before installation of the additional ventilation.

- Do not change the specification of this appliance.
- Remove all the packaging, labelling and protective film (if applicable) before first use.
- Make sure that the ventilation openings are not blocked.
- Do not let the appliance stay unattended during operation.
- Set the cooking zone to “off” after each use.
- Do not put cutlery or saucepan lids on the cooking zones. They can become hot.
- Do not operate the appliance with wet hands or when it has contact with water.
- Do not use the appliance as a work surface or as a storage surface.
- If the surface of the appliance is cracked, disconnect immediately the appliance from the power supply. This to prevent an electrical shock.
- Users with a pacemaker must keep a distance of minimum 30 cm from the induction cooking zones when the appliance is in operation.
- When you place food into hot oil, it may splash.

**⚠ WARNING!**

Risk of fire and explosion

- Fats and oil when heated can release flammable vapours. Keep flames or heated objects away from fats and oils when you cook with them.

- The vapours that very hot oil releases can cause spontaneous combustion.
- Used oil, that can contain food remnants, can cause fire at a lower temperature than oil used for the first time.
- Do not put flammable products or items that are wet with flammable products in, near or on the appliance.

**⚠ WARNING!**

Risk of damage to the appliance.

- Do not keep hot cookware on the control panel.
- Do not put a hot pan cover on the glass surface of the hob.
- Do not let cookware boil dry.
- Be careful not to let objects or cookware fall on the appliance. The surface can be damaged.
- Never leave a burner on with empty cookware or without cookware.
- Do not activate the cooking zones with empty cookware or without cookware.
- Do not put aluminium foil on the appliance.
- Cookware made of cast iron, aluminium or with a damaged bottom can cause scratches on the glass / glass ceramic. Always lift these objects up when you have to move them on the cooking surface.
- Use only stable cookware with the correct shape and diameter larger than the dimensions of the burners.
- Make sure cookware is centrally positioned on the burners.
- Do not use large cookware that overlap the edges of the appliance. This can cause damage to the worktop surface.
- Use only the accessories supplied with the appliance.
- Do not install a flame diffuser on the burner.
- Do not let acid liquids, for example vinegar, lemon juice or limescale remover, touch the hob. This can cause matt patches.
- Discoloration of the enamel or stainless steel has no effect on the performance of the appliance.

## 2.5 Care and cleaning

**⚠ WARNING!**

Do not remove the buttons, knobs or gaskets from the control panel. Water may get inside the appliance and cause damage.

- Clean the appliance regularly to prevent the deterioration of the surface material.
- Switch off the appliance and let it cool down before cleaning.
- Do not use water spray and steam to clean the appliance.
- Clean the appliance with a moist soft cloth. Use only neutral detergents. Do not use abrasive products, abrasive cleaning pads, solvents or metal objects, unless otherwise specified.

## 2.6 Service

- To repair the appliance contact the Authorised Service Centre. Use original spare parts only.
- Concerning the lamp(s) inside this product and spare part lamps sold separately: These lamps are intended to withstand extreme physical conditions in household appliances, such as temperature, vibration, humidity, or are intended to signal information about the operational status of the appliance. They are not intended to be used in other applications and are not suitable for household room illumination.

## 2.7 Disposal

**⚠ WARNING!**

Risk of injury or suffocation.

- Contact your local authority for information on how to dispose of the appliance.
- Disconnect the appliance from the mains supply.
- Cut off the mains electrical cable close to the appliance and dispose of it.
- Flat the external gas pipes.

# 3. INSTALLATION

**⚠ WARNING!**

Refer to Safety chapters.

## 3.1 Before the installation

Before you install the hob, write down the information below from the rating plate. The rating plate is on the bottom of the hob.

Model .....
PNC .....
Serial number .....

## 3.2 Built-in hobs

Only use the built-in hobs after you assemble the hob into correct built-in units and work surfaces that align to the standards.

## 3.3 Gas Connection

**⚠ WARNING!**

The following instructions about installation, maintenance and ventilation must be carried out by qualified personnel in compliance with the regulation in force (UNI-CIG 7129 - 7131). Make sure that the kitchen is well ventilated: keep natural ventilation holes open (at least 100 cm²) or install a mechanical extractor hood.

Choose fixed connections or use a flexible pipe in stainless steel in compliance with the regulation in force. If you use flexible metallic pipes, be careful they do not come in touch with mobile parts or they are not squeezed. Also be careful when the hob is put together with an oven.

ⓘ

Make sure that the gas supply pressure of the appliance obeys the recommended values.

If the supplied pressure has not the specified value, it is necessary to assemble a proper pressure regulator in compliance with the standard UNI EN 88. For Liquid Gas (LPG) the use of pressure regulator is allowed only if they are in compliance with UNI EN 12864. The adjustable connection is fixed to the comprehensive ramp by means of a threaded nut G 1/2". Screw the parts without force, adjust the connection in the necessary direction and tighten everything.

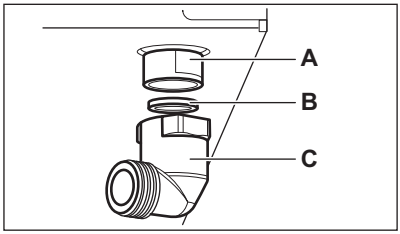


**A.** End of shaft with thread
**B.** Washer supplied with the appliance
**C.** Elbow supplied with the appliance

**Rigid connection:**
Carry out connection by using metal rigid pipes (copper with mechanical end) (UNI-CIG 7129).

**Flexible connection:**
Use a flexible pipe in stainless steel (UNI-CIG 9891) with a maximum length 2 m.

**⚠ WARNING!**

When installation is complete, make sure that the seal of each pipe fitting is correct. Use a soapy solution, not a flame!

## 3.4 Injectors replacement

1. Remove the pan supports.
2. Remove the caps and crowns of the burner.
3. With a socket spanner 7 remove the injectors and replace them with the ones which are necessary for the type of gas you use (see table in "Technical Data" chapter).
4. Assemble the parts, follow the same procedure backwards.
5. Attach the label with the new type of gas supply near the gas supply pipe. You can find this label in the package supplied with the appliance.

If the supply gas pressure is changeable or different from the necessary pressure, you must fit an applicable pressure adjuster on the gas supply pipe.

## 3.5 Adjustment of minimum level

To adjust the minimum level of the burners:

1. Light the burner.
2. Turn the knob on the minimum position.
3. Remove the knob, the gasket and the washer.

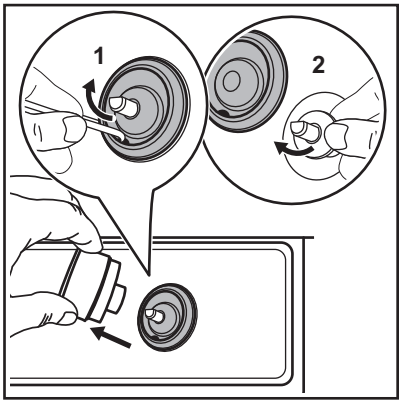


**⚠ WARNING!**

Pay attention not to damage the gasket. Do not use sharp tool to remove it.

**⚠ WARNING!**

Do not use the hob surface to leverage the gasket. This can cause damage to the glass.

4. With a thin screwdriver, adjust the bypass screw position (A).

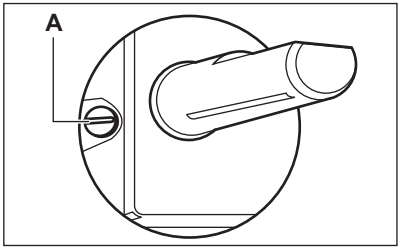


5. If you change:
   - from natural gas G20 20 mbar to liquid gas, fully tighten the bypass screw in.
   - from liquid gas to natural gas G20 20 mbar, undo the bypass screw approximately 1/4 of a turn.
6. Reassemble the washer, the gasket and the knob.

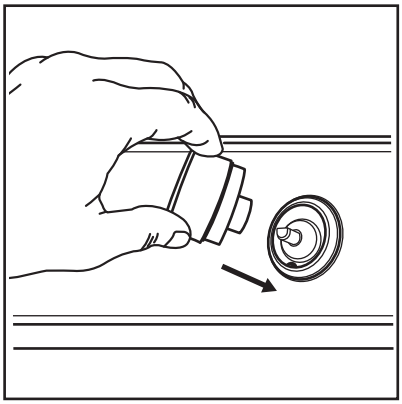

**⚠ WARNING!**

Make sure to place the gasket and washer exactly in their original positions.

**⚠ WARNING!**

Make sure the flame does not go out when you quickly turn the knob from the maximum position to the minimum position.

## 3.6 Connection cable

- Make sure that the rated voltage and type of power on the rating plate agree with the voltage and the power of the local power supply.
- The hob is supplied with the connection cable.
- Replace the damaged mains cable only with the spare parts cable. Speak to your local Authorised Service Center.
- Do not let the power cable to heat up to a temperature higher than 90°C.

**⚠ WARNING!**

All electrical connections must be made by a qualified electrician.

**⚠ CAUTION!**

Do not drill or solder the wire ends. This is strictly forbidden!

**⚠ CAUTION!**

Do not connect the cable without cable end sleeve.

To replace the connection cable use only the special cable provided. The cable type is: H05V2V2-F T90.

Make sure that the cable section is applicable to the voltage and the working temperature. The green - yellow earth wire must be approximately 1 cm longer than the brown and black phase wires.

To prevent contact between the cable and the appliance below the hob use the clamps which are on the side of the cabinet.

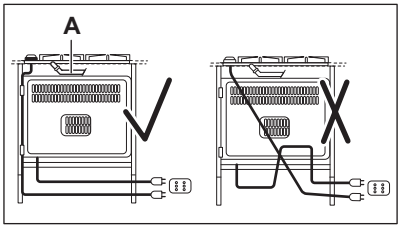


**A.** Rigid copper pipe or flexible pipe of stainless steel

## 3.7 Connection diagram

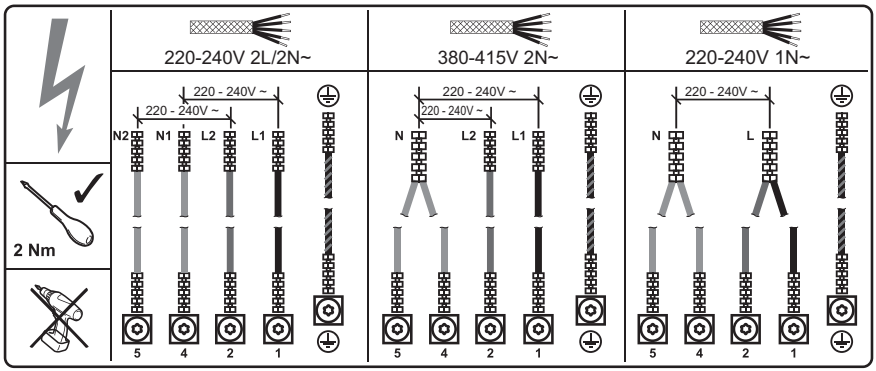


| Two-phase connection: 220-240V 2L/2N~ | | Two-phase connection: 380-415V 2N~ | | One-phase connection: 220 - 240V 1N ~ | |
|---|---|---|---|---|---|
| Green - yellow | ⏚ | Green - yellow | ⏚ | Green - yellow | ⏚ |
| Blue | N1 | Blue and blue | N | Blue and blue | N |
| Blue | N2 | Black | L1 | Black and brown | L |
| Black | L1 | Brown | L2 | | |
| Brown | L2 | | | | |

## 3.8 Attaching the seal - On-top installation

**1.** Clean the worktop around the cut out area.

**2.** Attach the supplied seal stripe to the lower edge of the hob, along the outer edge of the glass ceramic. Do not stretch it. Make sure that the ends of the seal stripe are located in the middle of one side of the hob.

3. Add some millimetres to the length when you cut the seal stripe.
4. Join the two ends of the seal stripe together.

## 3.9 Assembly

### ON-TOP INSTALLATION

1.

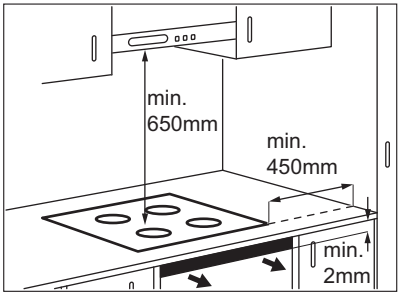


2.

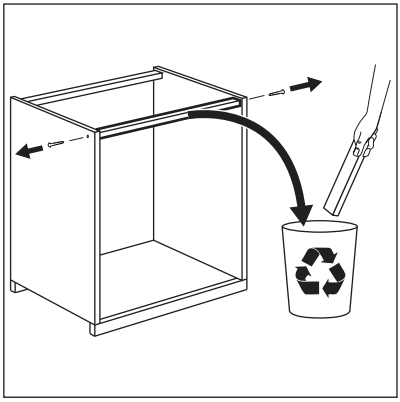

3.

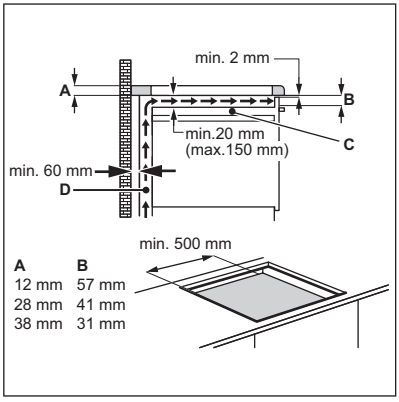


**C.** Removable panel
**D.** Space for connections

4.

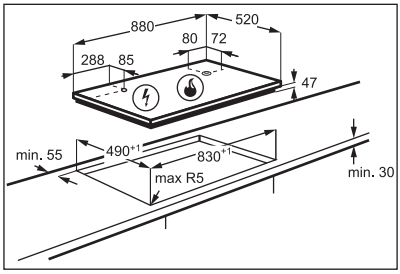


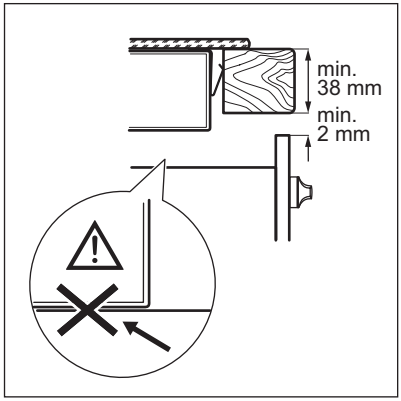


5.

6. Install all four springs using supplied T20 screws:

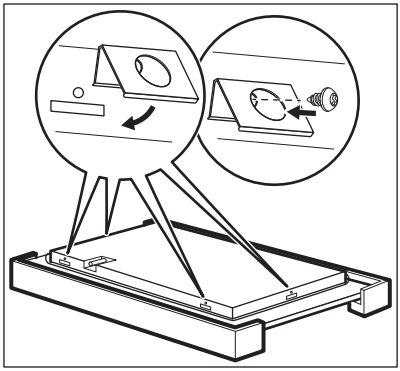

**7.**

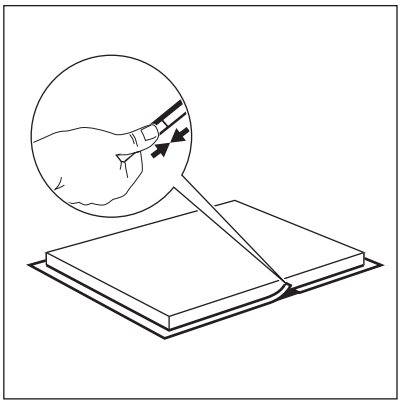

**CAUTION!**

Install the appliance only on a worktop with a flat surface.

**INTEGRATED INSTALLATION**

**1.**

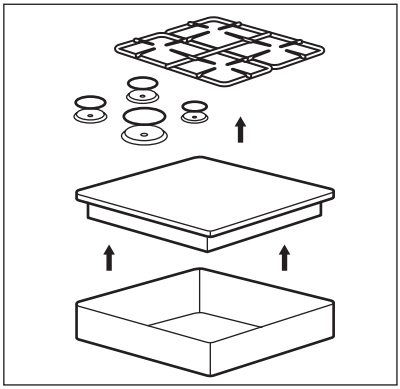

**2.**

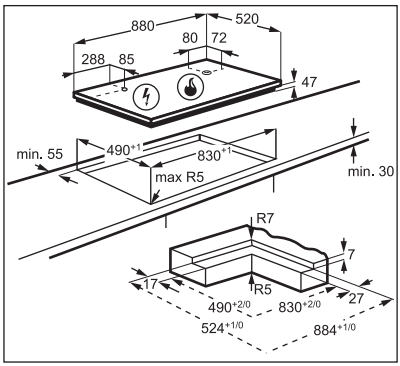


**3.** Install all four springs using supplied T20 screws:

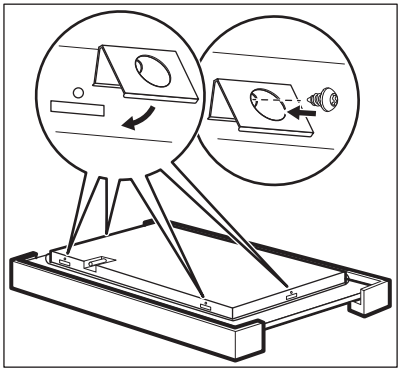

4.

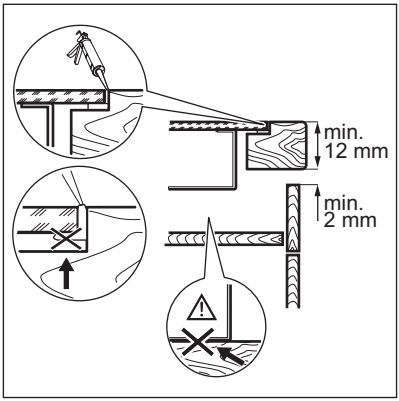


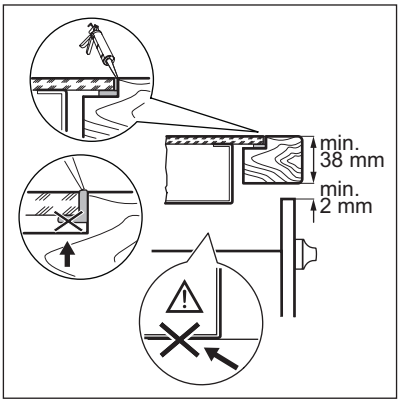


5.

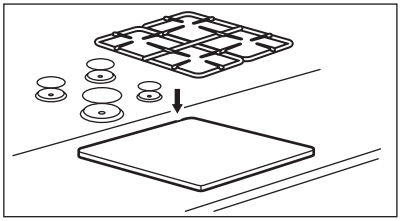

## 3.10 Possibilities for insertion

**Kitchen unit with door**

The panel installed below the hob must be easy to remove and let an easy access in case a technical assistance intervention is necessary.

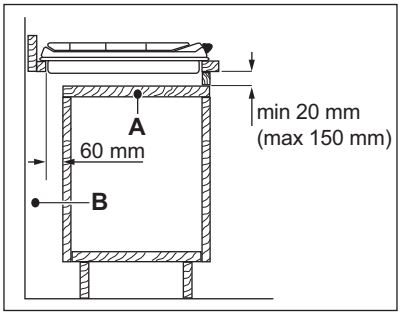


**A.** Removable panel
**B.** Space for connections

**Kitchen unit with oven**

The electrical connection of the hob and the oven must be installed separately for safety reasons and to let easy remove oven from the unit.

**⚠ CAUTION!**

The bottom of the appliance can get hot. If an oven isn't installed beneath the hob, a non-combustible separation panel must be installed under the appliance to prevent access to the bottom. The position of the panel is described in the "Installation" chapter.

# 4. PRODUCT DESCRIPTION

## 4.1 Cooking surface layout

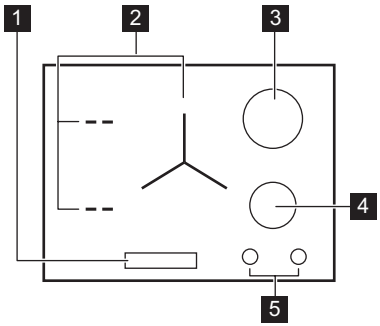


1 Control panel
2 Induction cooking zones
3 Ultra Rapid burner
4 Semi-rapid burner
5 Control knobs

## 4.2 Control knob

| Symbol | Description |
|---|---|
| ● | no gas supply / off position |
| ✶ | ignition position / maximum gas supply |
| 1 | minimum gas supply |
| 1 - 9 | power levels |

## 4.3 Control panel layout

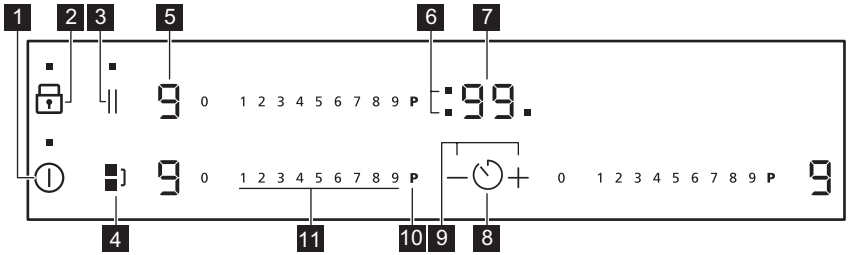


Use the sensor fields to operate the appliance. The displays, indicators and sounds tell which functions operate.

| | Sensor field | Function | Comment |
|---|---|---|---|
| 1 | ⏻ | ON / OFF | To activate and deactivate the hob. |
| 2 | 🔒 | Lock / Child Safety Device | To lock / unlock the control panel. |
| 3 | \|\| | STOP+GO | To activate and deactivate the function. |
| 4 | ▪⌐ | Bridge | To activate and deactivate the function. |
| 5 | - | Heat setting display | To show the heat setting. |

| | Sensor field | Function | Comment |
|---|---|---|---|
| 6 | - | Timer indicators of cooking zones | To show for which zone you set the time. |
| 7 | - | Timer display | To show the time in minutes. |
| 8 | ⏲ | - | To select the cooking zone. |
| 9 | + / − | - | To increase or decrease the time. |
| 10 | P | PowerBoost | To activate and deactivate the function. |
| 11 | - | Control bar | To set a heat setting. |

## 4.4 Heat setting displays

| Display | Description |
|---|---|
| 0 | The cooking zone is deactivated. |
| 1 - 9 | The cooking zone operates. |
| A | Automatic Heat Up operates. |
| P | PowerBoost operates. |
| E + digit | There is a malfunction. |
| ≡ / = / _ | OptiHeat Control (3 step Residual heat indicator): continue cooking / keep warm / residual heat. |
| L | Lock / Child Safety Device operates. |
| F | Incorrect or too small cookware or no cookware on the cooking zone. |
| - | Automatic Switch Off operates. |

## 4.5 OptiHeat Control (3 step Residual heat indicator)

**⚠ WARNING!**

≡ / = / _ As long as the indicator is on, there is a risk of burns from residual heat.

The induction cooking zones produce the heat necessary for the cooking process directly in the bottom of the cookware. The glass ceramic is heated by the heat of the cookware.

The indicators appear when a cooking zone is hot. They show the level of the residual heat for the cooking zones you are currently using:

≡ - continue cooking,

= - keep warm,

_ - residual heat.

The indicator may also appear:

- for the neighbouring cooking zones even if you are not using them,

- when hot cookware is placed on cold cooking zone,
- when the hob is deactivated but the cooking zone is still hot.

The indicator disappears when the cooking zone has cooled down.

## 5. DAILY USE

**⚠ WARNING!**

Refer to Safety chapters.

### 5.1 Gas burners

#### Burner overview

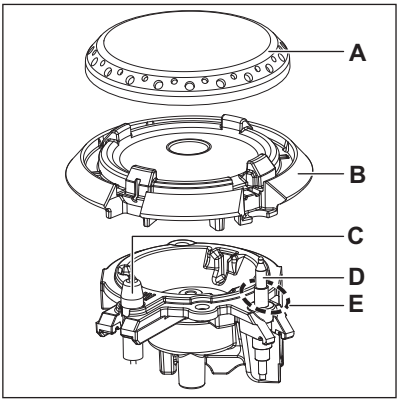


**A.** Burner cap
**B.** Burner crown
**C.** Ignition candle
**D.** Thermocouple
**E.** Pilot flame

#### Ignition of the burner

ⓘ

Always light the burner before you put on the cookware.

**⚠ WARNING!**

Be very careful when you use open fire in the kitchen environment. The manufacturer declines any responsibility in case of the flame misuse.

1. Push the control knob down and turn it counterclockwise to the maximum gas supply position (✱).
2. Keep the control knob pushed for equal or less than 10 seconds. This lets the thermocouple warm up. If not, the gas supply is interrupted.
3. Adjust the flame after it is regular.

ⓘ

If after some tries the burner does not light, check if the crown and its cap are in correct positions.

**⚠ WARNING!**

Do not keep the control knob pushed for more than 15 seconds. If the burner does not light after 15 seconds, release the control knob, turn it into off position and try to light the burner again after minimum 1 minute.

**⚠ CAUTION!**

In the absence of electricity you can ignite the burner without electrical device; in this case approach the burner with a flame, turn the control knob counter-clockwise to maximum gas supply position and push it down. Keep the control knob pushed for equal or less than 10 seconds to let the thermocouple warm up.

ⓘ

If the burner accidentally goes out, turn the control knob to the off position and try to light the burner again after minimum 1 minute.

The spark generator can start automatically when you switch on the mains, after installation or a power cut. It is normal.

The hob is supplied with StepPower. This function allows you to set the power more precisely from 9-1.

The flame that surrounds the thermocouple is a pilot flame. It prevents unexpected shutdown.

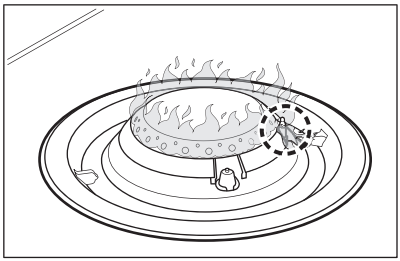

### Turning the burner off

To put the flame out, turn the knob to the off position ●.

**⚠ WARNING!**

Always turn the flame down or switch it off before you remove the pans from the burner.

## 5.2 Induction cooking zones

### Activating and deactivating

Touch ⏻ for 1 second to activate or deactivate the hob.

### Automatic Switch Off

**The function deactivates the hob automatically if:**

- all cooking zones are deactivated,
- you do not set the heat setting after you activate the hob,
- you spill something or put something on the control panel for more than 10 seconds (a pan, a cloth, etc.). An acoustic signal sounds and the hob deactivates. Remove the object or clean the control panel.
- the hob gets too hot (e.g. when a saucepan boils dry). Let the cooking zone cool down before you use the hob again.
- you use incorrect cookware. The symbol F comes on and the cooking zone deactivates automatically after 2 minutes.
- you do not deactivate a cooking zone or change the heat setting. After some time - comes on and the hob deactivates.

**The relation between the heat setting and the time after which the hob deactivates:**

| Heat setting | The hob deactivates after |
|---|---|
| u, 1 - 2 | 6 hours |
| 3 - 4 | 5 hours |
| 5 | 4 hours |
| 6 - 9 | 1.5 hour |

### The heat setting

To set or change the heat setting:

Touch the control bar at the correct heat setting or move your finger along the control bar until you reach the correct heat setting.

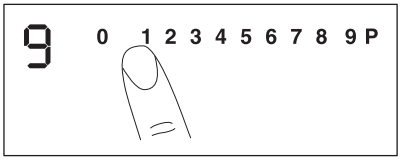


### Bridge

The function operates when the pot covers the centres of the two zones.

This function connects two left side cooking zones and they operate as one.

First set the heat setting for one of the left side cooking zones.

**To activate the function:** touch . To set or change the heat setting touch one of the control sensors.

**To deactivate the function:** touch . The cooking zones operate independently.

## Automatic Heat Up

Use the function to get a desired heat setting in a shorter time. When the function is on, the cooking zone operates at the highest heat setting in the beginning and then continues to operate at the desired heat setting.

To activate the function the cooking zone must be cold.

**To activate the function for a cooking zone:** touch P (P comes on). Immediately touch a desired heat setting. After 3 seconds A comes on.

**To deactivate the function:** change the heat setting.

## PowerBoost

This function makes more power available to the induction cooking zones. The function can be activated for the induction cooking zone only for a limited period of time. After this time the induction cooking zone automatically sets back to the highest heat setting.

**To activate the function for a cooking zone:** touch P. P comes on.

**To deactivate the function:** change the heat setting.

## Timer

- **Count Down Timer**

You can use this function to set the length of a single cooking session.

First set the heat setting for the cooking zone, then set the function.

**To set the cooking zone:** touch repeatedly until the indicator of a cooking zone appears.

**To activate the function or change the time:** touch + or − of the timer to set the time (00 - 99 minutes). When the indicator of the cooking zone starts to flash, the time counts down.

**To see the remaining time:** touch to set the cooking zone. The indicator of the cooking zone starts to flash. The display shows the remaining time.

**To deactivate the function:** touch to set the cooking zone and then touch −. The remaining time counts down to **00**. The indicator of the cooking zone disappears.

When the countdown ends, an acoustic signal sounds and **00** flashes. The cooking zone deactivates.

**To stop the sound:** touch .

- **Minute Minder**

You can use this function when the hob is activated and the cooking zones do not operate. The heat setting display shows 0.

**To activate the function:** touch and then touch + or − of the timer to set the time. When the time finishes, an acoustic signal sounds and **00** flashes.

**To stop the sound:** touch .

The function has no effect on the operation of the cooking zones.

## Pause

This function sets all cooking zones that operate to the lowest heat setting.

When the function operates, you cannot change the heat setting.

**To activate the function:** touch II. comes on.

**To deactivate the function:** touch ||. The previous heat setting comes on.

## Lock

You can lock the control panel while cooking zones operate. It prevents an accidental change of the heat setting.

**Set the heat setting first.**

**To activate the function:** touch 🔒. L comes on for 4 seconds.

**To deactivate the function:** touch 🔒. The previous heat setting comes on.

> ⓘ
> When you deactivate the hob, you also deactivate this function.

## Child Safety Device

This function prevents an accidental operation of the hob.

**To activate the function:** activate the hob with ⏻. Do not set any heat setting. Touch 🔒 for 4 seconds. L comes on. Deactivate the hob with ⏻.

**To deactivate the function:** activate the hob with ⏻. Do not set any heat setting. Touch 🔒 for 4 seconds. 0 comes on. Deactivate the hob with ⏻.

## OffSound Control (Deactivating and activating the sounds)

Deactivate the hob. Touch ⏻ for 3 seconds. The display comes on and goes out. Touch 🔒 for 3 seconds. 60 or 61 comes on. Touch + of the timer to choose one of the following:

- 61 - the sounds are off
- 60 - the sounds are on

To confirm your selection wait until the hob deactivates automatically.

When the function is set to 61 you can hear the sounds only when:

- you touch ⏻
- Minute Minder comes down
- Count Down Timer comes down
- you put something on the control panel.

## Power limitation

Originally the hob is at its highest possible power level.

**To decrease or increase the power level:**

1. Deactivate the hob.
2. Touch ⏻ for 3 seconds. The display comes on and goes off.
3. Touch 🔒 for 3 seconds. 60 or 61 comes on.
4. Touch ⏲. P72 comes on.
5. Touch — / + of the Timer to set the power level.
6. Wait for the display to go off.

**Power levels**

Refer to “Technical data” chapter.

- P72 — Max Power
- P15 — 1500 W
- P20 — 2000 W
- P25 — 2500 W
- P30 — 3000 W
- P35 — 3500 W
- P40 — 4000 W
- P45 — 4500 W
- P50 — 5000 W
- P60 — 6000 W

> ⚠ **CAUTION!**
> Make sure that the selected power fits to the house installation fuses.

## Power management function

- Cooking zones are grouped according to the location and number of the phases in the hob. See the illustration.
- Each phase has a maximum electricity loading of 3600 W.
- The function divides the power between cooking zones connected to the same phase.
- The function activates when the total electricity loading of the cooking zones connected to a single phase exceeds 3600 W.

- The function decreases the power to the other cooking zones connected to the same phase.
- The heat setting display of the reduced zones alternates between the chosen heat setting and the reduced heat setting. After some time the heat setting display of the reduced zones stays on the reduced heat setting.

**Power management function with Power limitation function**

When you set the Power limitation function to **4.5 kW or less**, power of the hob is divided between all cooking zones.

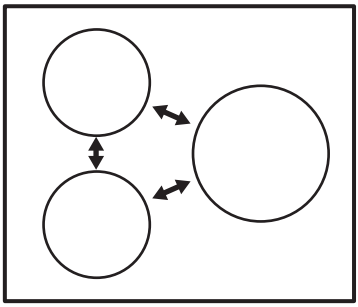

When you set the Power limitation function to **more than 4.5 kW**, the power of the hob is divided between its left and right side.

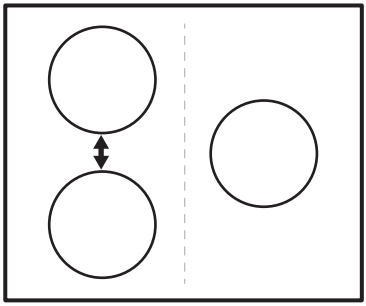

# 6. HINTS AND TIPS

**⚠ WARNING!**

Refer to Safety chapters.

## 6.1 Cookware

**Electric:**

ⓘ

For induction cooking zones a strong electro-magnetic field creates the heat in the cookware very quickly.

Use the induction cooking zones with suitable cookware.

- The bottom of the cookware must be as thick and flat as possible.
- Ensure pan bases are clean and dry before placing on the hob surface.
- In order to avoid scratches, do not slide or rub the pot across the ceramic glass.

**Cookware material**

- **correct:** cast iron, steel, enamelled steel, stainless steel, multi-layer bottom (with a correct marking from a manufacturer).
- **not correct:** aluminium, copper, brass, glass, ceramic, porcelain.

**Cookware is suitable for an induction hob if:**

- water boils very quickly on a zone set to the highest heat setting.
- a magnet pulls on to the bottom of the cookware.

**Cookware dimensions**

- Induction cooking zones adapt to the dimension of the bottom of the cookware automatically.
- The cooking zone efficiency is related to the diameter of the cookware. The cookware with a diameter smaller than the minimum receives only a part of the power generated by the cooking zone.

- For both safety reasons and optimal cooking results, do not use cookware larger than indicated in "Cooking zones specification". Avoid keeping cookware close to the control panel during the cooking session. This might impact the functioning of the control panel or accidentally activate hob functions.

ⓘ

Refer to "Technical data".

**⚠ CAUTION!**

Do not use cast iron pans, clay or earthenware pots, grilling accessories or toaster plates.

**Gas:**

**⚠ WARNING!**

Do not put the same pan on two burners.

**⚠ WARNING!**

Do not put unstable or damaged pots on the burner to prevent spills and injuries.

**⚠ CAUTION!**

Make sure that pot handles are not above the front edge of the cooktop.

**⚠ CAUTION!**

Make sure that the pots are placed centrally on the burner in order to get the maximum stability and a lower gas consumption.

**⚠ CAUTION!**

Liquids spilt during cooking can cause the glass to break.

## 6.2 Diameters of cookware

**⚠ CAUTION!**

Use cookware with diameters applicable to the size of burners.

| Burner | Diameter of cookware (mm) |
|---|---|
| Ultra Rapid | 180 - 260 |
| Semi-rapid | 160 - 220 |

## 6.3 Öko Timer (Eco Timer)

To save energy, the heater of the cooking zone deactivates before the count down timer sounds. The difference in the operation time depends on the heat setting level and the length of the cooking operation.

## 6.4 The noises during operation (for induction cooking zones)

**If you can hear:**

- crack noise: cookware is made of different materials (sandwich construction).
- whistle sound: you use a cooking zone with a high power level and the cookware is made of different materials (a sandwich construction).
- humming: you use high power level.
- clicking: electric switching occurs.
- hissing, buzzing: the fan operates.

**The noises are normal and do not refer to hob malfunction.**

## 6.5 Examples of cooking applications (for induction cooking zones)

The relation between the heat setting and the cooking zone consumption of power is not linear. When you increase the heat setting, it is not proportional to the increase of the cooking zone consumption of power. It means that the cooking zone with the medium heat setting uses less than a half of its power.

ⓘ

The data in the table is for guidance only.

| Heat setting | Use to: | Time (min) | Hints |
|---|---|---|---|
| ⏛ - 1 | Keep cooked food warm. | as necessary | Put a lid on the cookware. |
| 1 - 2 | Hollandaise sauce, melt: butter, chocolate, gelatine. | 5 - 25 | Mix from time to time. |
| 1 - 2 | Solidify: fluffy omelettes, baked eggs. | 10 - 40 | Cook with a lid on. |
| 2 - 3 | Simmer rice and milkbased dishes, heating up ready-cooked meals. | 25 - 50 | Add the minimum twice as much liquid as rice, mix milk dishes part procedure through. |
| 3 - 4 | Steam vegetables, fish, meat. | 20 - 45 | Add some tablespoons of liquid. |
| 4 - 5 | Steam potatoes. | 20 - 60 | Use max. ¼ l water for 750 g of potatoes. |
| 4 - 5 | Cook larger quantities of food, stews and soups. | 60 - 150 | Up to 3 l liquid plus ingredients. |
| 6 - 7 | Gentle fry: escalope, veal cordon bleu, cutlets, rissoles, sausages, liver, roux, eggs, pancakes, doughnuts. | as necessary | Turn halfway through. |
| 7 - 8 | Heavy fry, hash browns, loin steaks, steaks. | 5 - 15 | Turn halfway through. |
| 9 | Boil water, cook pasta, sear meat (goulash, pot roast), deep-fry chips. | | |
| P | Boil large quantities of water. Power function is activated. | | |

## 6.6 Examples of cooking applications (for gas burners)

| Food categories | Recipes | Burner type | Heat up phase power level 1) | Cooking phase power level |
|---|---|---|---|---|
| Pasta - Rice - other Cereals | Mushrooms rice | Large | - | 5-8 |
| | Couscous | Large | 4-6 | 1-3 2) |
| | Spaghetti | Large | - | 7-9 |
| | Ravioli | Large | - | 7-9 |
| Soup - Legumes | Vegetable soup | Medium | - | 6-9 2) |
| | Mushrooms and potatoes soup | Medium | - | 6-9 2) |
| | Fish soup | Large | - | 1-2 2) |
| Meat | Beef meatballs | Large | 3-6 | 1-3 2) |
| | Fillet of pork roast | Large | 7-9 | 4-6 |
| | Beef burger gratin | Medium | 7-9 | 3-6 |

| Food categories | Recipes | Burner type | Heat up phase power level 1) | Cooking phase power level |
|---|---|---|---|---|
| Fish | Sepia with peas | Large | - | 1-3 2) |
| | Roasted tuna steak | Large | 7-9 | 4-6 |
| Vegetables | Mushrooms with seasonings | Medium | - | 5-8 |
| | Caponata with vegetables | Large | 4-6 | 1-3 2) |
| | Boiled potatoes | Medium | - | 7-9 |
| | Frozen spinach with butter | Large | - | 1-3 |
| Fried dishes | French fries | Large | - | 8-9 |
| | Donuts | Large | 6-8 | 1-2 |
| Snacks cooked with pan | Roasting nuts | Large | 7-9 | 4-6 |
| | Croutons of bread and escarole | Large | 7-9 | 4-6 |
| | Pancakes | Medium | 7-9 | 2-5 |

**1)** Useful to reach the optimal cooking condition (e.g. correct pan/pot temperature, boiling water and heating up oil...) before starting the real cooking phase with a different/lower power level.

**2)** Cook with a lid on.

ⓘ

All recipes for approximately 4 portions.

ⓘ

The settings suggested in the cooking table should only serve as guidelines and be adjusted depending on the rawness of food, its weight and quantity as well as on the type of gas used and the material of the cookware used to prepare the dish.

# 7. CARE AND CLEANING

⚠ **WARNING!**

Refer to Safety chapters.

## 7.1 General information

- Clean the hob after each use.
- Always use cookware with clean bottom.
- Scratches or dark stains on the surface have no effect on how the hob operates.
- Use a special cleaner applicable for the surface of the hob.
- Use a special scraper for the glass.

⚠ **WARNING!**

Do not use knives, scrapers or similar instruments to clean the surface of the glass or between the rims of the burners and the frame (if applicable).

- Wash stainless steel parts with water, and then dry them with a soft cloth.

## 7.2 Pan supports

ⓘ

You can wash the pan supports in a dishwasher.

1. Remove the pan supports to easily clean the hob.

ⓘ

Be very careful when you replace the pan supports to prevent the hob top from damage.

2. After you clean the pan supports, make sure that they are in correct positions.
3. For the burner to operate correctly, make sure that the arms of the pan supports are inserted in the recesses of the enamelled plates.

## 7.3 Removing and assembling pan supports

After cleaning of the hob, make sure that pan supports are in a correct position. In order to place a pan support properly, make sure that its arms fits the grips placed at the base of the burner as shown in the picture. This way, a pan support is stable and fixed.

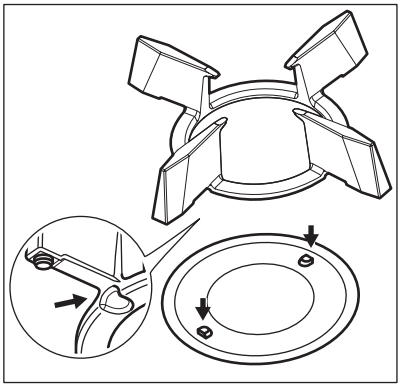

## 7.4 Cleaning the hob

- **Remove immediately:** melted plastic, plastic foil, salt, sugar and food with sugar, otherwise, the dirt can cause damage to the hob. Take care to avoid burns. Use a special hob scraper on the glass surface at an acute angle and move the blade on the surface.
- **Remove when the hob is sufficiently cool:** limescale rings, water rings, fat stains, shiny metallic discoloration. Clean the hob with a moist cloth and a non-abrasive detergent. After cleaning, wipe the hob dry with a soft cloth.
- **Remove shiny metallic discoloration:** use a solution of water with vinegar and clean the glass surface with a cloth.
- To clean the enamelled parts, caps and crowns, wash them with warm soapy water and dry them carefully before you put them back on.

## 7.5 Cleaning the flame spreader

ⓘ

You can wash the flame spreaders in a dishwasher.

⚠ **WARNING!**

Let the flame spreaders cool down before you clean them.

**Light stains:**
Wash the flame spreader with warm water and soap and dry it with a soft cloth.

**Medium stains:**
Use the dishwasher. Place the flame spreader on the bottom rack in a flat position, with the top side up.

**Heavy stains:**
Clean the flame spreader with warm water and soap, then wash it in the dishwasher. If the stain is still present wash the top of the flame spreader with a grill cleaner and run through the dishwasher again.

Use a toothpick to clean the holes of the flame spreader.

## 7.6 Cleaning the spark plug

This feature is obtained through a ceramic ignition candle with a metal electrode. Keep these components well clean to prevent difficult lighting and check that the burner crown holes are not obstructed.

### 7.7 Periodic maintenance

Speak to your local Authorised Service Centre periodically to check the conditions of the gas supply pipe and the pressure adjuster, if fitted.

## 8. TROUBLESHOOTING

**⚠ WARNING!**
Refer to Safety chapters.

### 8.1 What to do if...

| Problem | Possible cause | Remedy |
|---|---|---|
| You cannot activate or operate the hob. | The hob is not connected to an electrical supply or it is connected incorrectly. | Check if the hob is correctly connected to the electrical supply. Refer to the connection diagram. |
| | The fuse is blown. | Make sure that the fuse is the cause of the malfunction. If the fuse is blown again and again, contact a qualified electrician. |
| | | Activate the hob again and set the heat setting in less than 10 seconds. |
| | You touched 2 or more sensor fields at the same time. | Touch only one sensor field. |
| | There is water or fat stains on the control panel. | Clean the control panel. |
| An acoustic signal sounds and the hob deactivates.<br>An acoustic signal sounds when the hob is deactivated. | You put something on one or more sensor fields. | Remove the object from the sensor fields. |
| The hob deactivates. | You put something on the sensor field ⏻. | Remove the object from the sensor field. |
| Residual heat indicator does not come on. | The zone is not hot because it operated only for a short time. | If the zone operated sufficiently long to be hot, speak to an Authorised Service Centre. |
| Automatic Heat Up function does not operate. | The zone is hot. | Let the zone become sufficiently cool. |
| | The highest heat setting is set. | The highest heat setting has the same power as the function. |
| The heat setting changes between two levels. | Power management function operates. | Refer to "Daily use" chapter. |
| The sensor fields become hot. | The cookware is too large or you put it too near to the controls. | Put large cookware on the rear zones if possible. |
| There is no signal when you touch the panel sensor fields. | The signals are deactivated. | Activate the signals.<br>Refer to "Daily use" chapter. |

| Problem | Possible cause | Remedy |
|---|---|---|
| [-] comes on. | Automatic Switch Off operates. | Deactivate the hob and activate it again. |
| [L] comes on. | The Child Safety Device or the Lock function operates. | Refer to "Daily use" chapter. |
| [F] comes on. | There is no cookware on the zone. | Put cookware on the zone. |
| | The cookware is incorrect. | Use the correct cookware.<br>Refer to “Hints and tips” chapter. |
| | The diameter of the bottom of the cookware is too small for the zone. | Use cookware with correct dimensions.<br>Refer to “Technical data” chapter. |
| [E] and a number come on. | There is an error in the hob. | Disconnect the hob from the electrical supply for some time. Disconnect the fuse from the electrical system of the house. Connect it again.<br>If [E] comes on again, speak to an Authorised Service Centre. |
| There is no spark when you try to activate the spark generator. | The hob is not connected to an electrical supply or it is connected incorrectly. | Check if the hob is correctly connected to the electrical supply. |
| | The fuse is blown. | Make sure that the fuse is the cause of the malfunction. If the fuse is blown again and again, contact a qualified electrician. |
| | Burner cap and crown are placed incorrectly. | Place the burner cap and crown correctly. |
| The flame extinguishes immediately after ignition. | Thermocouple is not heated up sufficiently. | After lightning the flame, keep the knob pushed for equal or less than 10 seconds. |
| The flame ring is uneven. | Burner crown is blocked with food residues. | Make sure that the injector is not blocked and the burner crown is clean. |

## 8.2 If you cannot find a solution...

If you cannot find a solution to the problem yourself, contact your dealer or an Authorised Service Centre. Give the data from the rating plate. Give also an error message that comes on.Make sure, you operated the hob correctly. If not the servicing by a service technician or dealer will not be free of charge, also during the warranty period. The information about guarantee period and Authorised Service Centres are in the guarantee booklet.

### 8.3 Labels supplied with the accessories bag

Stick the adhesive labels as indicated below:

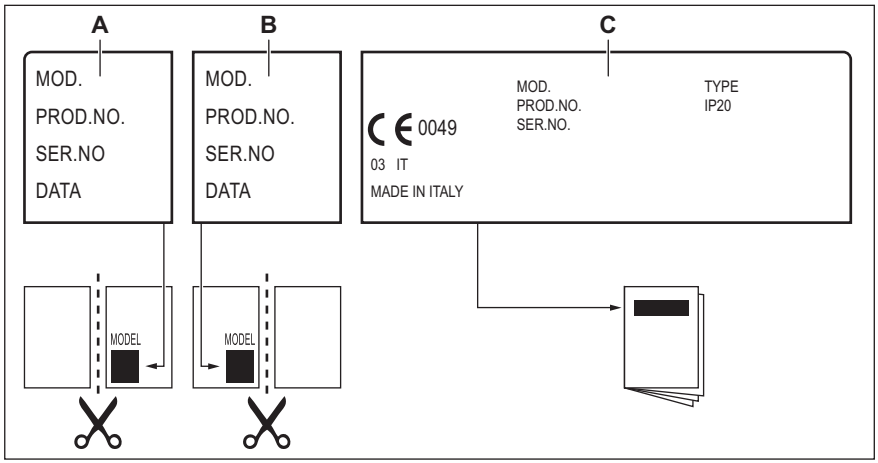


**A.** Stick it on Guarantee Card and send this part (if applicable).
**B.** Stick it on Guarantee Card and keep this part (if applicable).
**C.** Stick it on instruction booklet.

## 9. TECHNICAL DATA

### 9.1 Hob dimensions

| | |
|---|---|
| Width | 880 mm |
| Depth | 520 mm |

### 9.2 Cooking zones specification

| Cooking zone | Nominal power (maximum heat setting) [W] | PowerBoost [W] | PowerBoost maximum duration [min] | Cookware diameter [mm] |
|---|---|---|---|---|
| Left front | 1800 | 2800 | 10 | 145 - 180 |
| Left rear | 1800 | 2800 | 10 | 145 - 180 |
| Middle centre | 1800<br>3600 | 2800<br>3600 | 10<br>10 | 145 - 245<br>245 - 280 |

The power of the cooking zones can be different in some small range from the data in the table. It changes with the material and dimensions of the cookware.

For optimal cooking results use cookware no larger than the diameter in the table.

### 9.3 Bypass diameters

| BURNER | Ø BYPASS 1/100 mm |
|---|---|
| Ultra Rapid | 57 |
| Semi-rapid | 32 |

### 9.4 Other technical data

| | | | |
|---|---|---|---|
| TOTAL POWER: | Gas original: | G20 (2H) 20 mbar | 4,5 kW |
| | Gas replace-ment: | G30 (3+) 28-30 mbar<br>G31 (3+) 37 mbar | 334 g/h<br>329 g/h |
| | Electric zones: | 7,2 kW | |
| Electric supply: | 230/400 V 2N~ 50-60 Hz | | |
| Appliance category: | II2H3+ | | |
| Gas connection: | G 1/2" | | |
| Appliance class: | 3 | | |

### 9.5 Gas burners for NATURAL GAS G20 20 mbar

| BURNER | NORMAL POWER kW | MINIMUM POWER kW | INJECTOR MARK |
|---|---|---|---|
| Ultra Rapid | 2,65 | 1,4 | 110 |
| Semi-rapid | 1,85 | 0,45 | 103x |

### 9.6 Gas burners for LPG G30/G31 28-30/37 mbar

| BURNER | NORMAL POWER kW | MINIMUM POWER kW | INJECTOR MARK | NOMINAL GAS FLOW g/h | |
|---|---|---|---|---|---|
| | | | | G30 28-30 mbar | G31 37 mbar |
| Ultra Rapid | 2,75 | 1,4 | 87 | 200 | 196 |
| Semi-rapid | 1,85 | 0,45 | 67 | 134 | 132 |

## 10. ENERGY EFFICIENCY

### 10.1 Product Information according to EU Ecodesign regulation

| | |
|---|---|
| Model identification | HDB95623NB |

| | | |
|---|---|---|
| Type of hob | | Built-in hob |
| Number of electric cooking zones | | 3 |
| Heating technology per electric cooking zone | | Induction |
| Diameter of circular electric cooking zones (Ø) | Left rear | 18.0 cm |
| | Left front | 18.0 cm |
| | Middle centre | 27.0 cm |
| Energy consumption per cooking zone (EC electric cooking) | Left rear | 180.0 Wh / kg |
| | Left front | 190.2 Wh / kg |
| | Middle centre | 180.0 Wh / kg |
| Number of gas burners | | 2 |
| Energy efficiency per gas burner (EE gas burner) | Right rear - Ultra Rapid | 55.3% |
| | Right front - Semi-rapid | 62.3% |
| Energy efficiency for the gas hob (EE gas hob) | | 58.8% |
| Energy consumption of the hob (EC electric hob) | | 183.4 Wh / kg |

EN 30-2-1: Domestic cooking appliances burning gas - Part 2-1 : Rational use of energy - General

IEC/EN 60350-2 - Household electric cooking appliances - Part 2: Hobs - Methods for measuring performance

### 10.2 Energy saving

- Before use, make sure that the burners and pan supports are assembled correctly.
- Use cookware with diameters applicable to the size of burners.
- Center the pot on the burner.
- When you heat up water, use only the amount you need.
- If it is possible, always put the lids on the cookware.
- When the liquid starts to boil, turn down the flame to barely simmer the liquid.
- If it is possible, use a pressure cooker. Refer to its user manual.

### 10.3 Product Information for power consumption and maximum time to reach applicable low power mode

| | |
|---|---|
| Power consumption in off mode | 0.3 W |
| Maximum time needed for the equipment to automatically reach the applicable low power mode | 2 min |

## 11. ENVIRONMENTAL CONCERNS

Recycle materials with the symbol ♺. Put the packaging in relevant containers to recycle it.

Help protect the environment and human health by recycling waste of electrical and electronic appliances. Do not dispose of

appliances marked with the symbol  with the household waste. Return the product to your local recycling facility or contact your municipal office.

Electrolux Appliances AB - Contact Address: Al. Powstancow Slaskich 26, 30-570 Krakow, Poland

aeg.com

867374179-E-182024

