HKB75453NB
HKB75453NW

EN **User Manual**
Hob

USER MANUAL

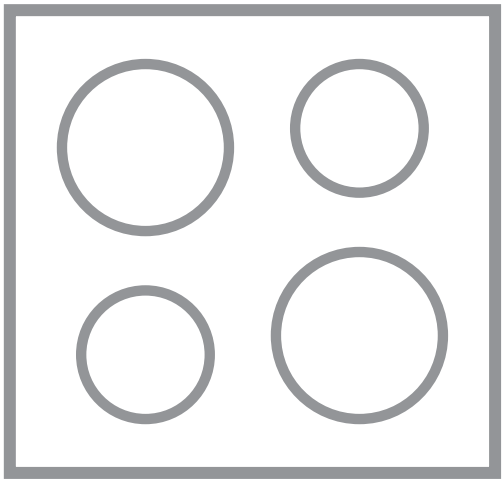

AEG

CONTENTS

1. SAFETY INFORMATION....2
2. SAFETY INSTRUCTIONS....5
3. INSTALLATION....8
4. PRODUCT DESCRIPTION....13
5. DAILY USE....15
6. HINTS AND TIPS....18
7. CARE AND CLEANING....21
8. TROUBLESHOOTING....22
9. TECHNICAL DATA....24
10. ENVIRONMENTAL CONCERNS....26

FOR PERFECT RESULTS

Thank you for choosing this AEG product. We have created it to give you impeccable performance for many years, with innovative technologies that help make life simpler – features you might not find on ordinary appliances. Please spend a few minutes reading to get the very best from it.
Visit our website to:

Get usage advice, brochures, trouble shooter, service and repair information:
www.aeg.com/support

Register your product for better service:
www.registeraeg.com

Buy Accessories, Consumables and Original spare parts for your appliance:
www.aeg.com/shop

CUSTOMER CARE AND SERVICE

Always use original spare parts.
When contacting our Authorised Service Centre, ensure that you have the following data available: Model, PNC, Serial Number.
The information can be found on the rating plate.

⚠ Warning / Caution-Safety information

ⓘ General information and tips

Environmental information

Subject to change without notice.

1. ⚠ SAFETY INFORMATION

Before the installation and use of the appliance, carefully read the supplied instructions. The manufacturer is not responsible for any injuries or damage that are the result of incorrect installation or usage. Always keep the

instructions in a safe and accessible location for future reference.

1.1 Children and vulnerable people safety

- This appliance is not intended for use by persons (including children) with reduced physical, sensory or mental capabilities, or lack of experience and knowledge, unless they have been given supervision or instruction concerning use of the appliance by a person responsible for their safety.
- Children should be supervised to ensure that they do not play with the appliance.
- Keep all packaging away from children and dispose of it appropriately.
- WARNING: The appliance and its accessible parts become hot during use. Keep children and pets away from the appliance when in use and when cooling down.
- If the appliance has a child safety device, it should be activated.
- Children shall not carry out cleaning and user maintenance of the appliance without supervision.

1.2 General Safety

- This appliance is for cooking purposes only.
- This appliance is designed for single household domestic use in an indoor environment.
- This appliance may be used in, offices, hotel guest rooms, bed & breakfast guest rooms, farm guest houses and other similar accommodation where such use does not exceed (average) domestic usage levels.
- WARNING: The appliance and its accessible parts become hot during use. Care should be taken to avoid touching heating elements.
- WARNING: Unattended cooking on a hob with fat or oil can be dangerous and may result in fire.

- Never use water to extinguish the cooking fire. Switch off the appliance and cover flames with e.g. a fire blanket or lid.
- WARNING: The appliance must not be supplied through an external switching device, such as a timer, or connected to a circuit that is regularly switched on and off by a utility.
- CAUTION: The cooking process has to be supervised. A short term cooking process has to be supervised continuously.
- WARNING: Danger of fire: Do not store items on the cooking surfaces.
- Metallic objects such as knives, forks, spoons and lids should not be placed on the hob surface since they can get hot.
- Do not use the appliance before installing it in the built-in structure.
- Do not use a steam cleaner to clean the appliance.
- If the glass ceramic surface / glass surface is cracked, switch off the appliance and unplug it from the mains. In case the appliance is connected to the mains directly using junction box, remove the fuse to disconnect the appliance from power supply. In either case contact the Authorised Service Centre.
- In case of hotplate glass breakage:
  - shut immediately off all burners and any electrical heating element and isolate the appliance from the power supply,
  - do not touch the appliance surface,
  - do not use the appliance.
- If the supply cord is damaged, it must be replaced by the manufacturer, an authorized Service or similarly qualified persons in order to avoid a hazard.
- Where the appliance is directly connected to the power supply, an all-pole isolating switch with a contact gap is required. Complete disconnection in compliance with the conditions specified in

overvoltage category III must be guaranteed. The earth cable is excluded from this.

- When you route the mains cable, make sure that the cable doesn't come into direct contact (for example using insulating sleeving) with parts that can reach temperatures of more than 50°C above room temperature.
- WARNING: Use only hob guards designed by the manufacturer of the cooking appliance or indicated by the manufacturer of the appliance in the instructions for use as suitable or hob guards incorporated in the appliance. The use of inappropriate guards can cause accidents.

2. SAFETY INSTRUCTIONS

This appliance is suitable for the following markets: RU

2.1 Installation

WARNING!
Only a qualified person must install this appliance.

WARNING!
Risk of injury or damage to the appliance.

- Remove all the packaging.
- Do not install or use a damaged appliance.
- Follow the installation instructions supplied with the appliance.
- Keep the minimum distance from other appliances and units.
- Always take care when moving the appliance as it is heavy. Always use safety gloves and enclosed footwear.
- Seal the cut surfaces with a sealant to prevent moisture from causing swelling.
- Protect the bottom of the appliance from steam and moisture.
- Do not install the appliance next to a door or under a window. This prevents hot cookware from falling from the appliance when the door or the window is opened.
- If the appliance is installed above drawers make sure that the space, between the bottom of the appliance and the upper drawer is sufficient for air circulation.
- The bottom of the appliance can get hot. Install a non-combustible separation panel under the appliance to prevent access to the bottom.

2.2 Electrical Connection

WARNING!
Risk of fire and electric shock.

- All electrical connections should be made by a qualified electrician.
- The appliance must be earthed.
- Before carrying out any operation make sure that the appliance is disconnected from the power supply.
- Make sure that the parameters on the rating plate are compatible with the electrical ratings of the mains power supply.
- Make sure the appliance is installed correctly. Loose and incorrect electricity mains cable or plug (if applicable) can make the terminal become too hot.
- Use the correct electricity mains cable.

- Do not let the electricity mains cable tangle.
- Make sure that a shock protection is installed.
- Use the strain relief clamp on the cable.
- Make sure the mains cable or plug (if applicable) does not touch the hot appliance or hot cookware, when you connect the appliance to a socket.
- Do not use multi-plug adapters and extension cables.
- Make sure not to cause damage to the mains plug (if applicable) or to the mains cable. Contact our Authorised Service Centre or an electrician to change a damaged mains cable.
- The shock protection of live and insulated parts must be fastened in such a way that it cannot be removed without tools.
- Connect the mains plug to the mains socket only at the end of the installation. Make sure that there is access to the mains plug after the installation.
- If the mains socket is loose, do not connect the mains plug.
- Do not pull the mains cable to disconnect the appliance. Always pull the mains plug.
- Use only correct isolation devices: line protecting cut-outs, fuses (screw type fuses removed from the holder), earth leakage trips and contactors.
- The electrical installation must have an isolation device which lets you disconnect the appliance from the mains at all poles. The isolation device must have a contact opening width of minimum 3 mm.

2.3 Gas connection

CAUTION!
When using a gas cylinder, always keep it on a flat horizontal surface (with the gas valve on top).

- All gas connections must be made by a qualified person.
- Before installation, make sure that the local distribution conditions (nature of the gas and gas pressure) and the adjustment of the appliance are compatible.
- Make sure that there is air circulation around the appliance.
- The information about the gas supply is on the rating plate.
- This appliance is not connected to a device, which evacuates the products of combustion. Make sure to connect the appliance according to current installation regulations. Follow the requirements for adequate ventilation.

2.4 Use

WARNING!
Risk of injury, burns and electric shock.

CAUTION!
The use of a gas cooking appliance results in the production of heat, moisture and products of combustion in the room in which it is installed. Ensure that the kitchen is well ventilated especially when the appliance is in use. Prolonged intensive use of the appliance may require additional ventilation, for example the increasing of mechanical ventilation where present, additional ventilation to safely remove the products of combustion to outside (external) air whilst also providing room air changes with additional ventilation. Consult a qualified person before installation of the additional ventilation.

- Do not change the specification of this appliance.
- Remove all the packaging, labelling and protective film (if applicable) before first use.
- Make sure that the ventilation openings are not blocked.
- Do not let the appliance stay unattended during operation.
- Set the cooking zone to “off” after each use.

- Do not put cutlery or saucepan lids on the cooking zones. They can become hot.
- Do not operate the appliance with wet hands or when it has contact with water.
- Do not use the appliance as a work surface or as a storage surface.
- When you place food into hot oil, it may splash.



WARNING!
Risk of fire and explosion

- Fats and oil when heated can release flammable vapours. Keep flames or heated objects away from fats and oils when you cook with them.
- The vapours that very hot oil releases can cause spontaneous combustion.
- Used oil, that can contain food remnants, can cause fire at a lower temperature than oil used for the first time.
- Do not put flammable products or items that are wet with flammable products in, near or on the appliance.



WARNING!
Risk of damage to the appliance.

- Do not keep hot cookware on the control panel.
- Do not let cookware boil dry.
- Be careful not to let objects or cookware fall on the appliance. The surface can be damaged.
- Never leave a burner on with empty cookware or without cookware.
- Do not put aluminium foil on the appliance.
- Cookware made of cast iron, aluminium or with a damaged bottom can cause scratches on the glass / glass ceramic. Always lift these objects up when you have to move them on the cooking surface.
- Use only stable cookware with the correct shape and diameter larger than the dimensions of the burners.
- Make sure cookware is centrally positioned on the burners.
- Do not use large cookware that overlap the edges of the appliance. This can cause damage to the worktop surface.
- Make sure the flame does not go out when you quickly turn the knob from the maximum to the minimum position.
- Use only the accessories supplied with the appliance.
- Do not install a flame diffuser on the burner.
- Do not let acid liquids, for example vinegar, lemon juice or limescale remover, touch the hob. This can cause matt patches.
- Discoloration of the enamel or stainless steel has no effect on the performance of the appliance.

2.5 Care and cleaning



WARNING!
Do not remove the buttons, knobs or gaskets from the control panel. Water may get inside the appliance and cause damage.

- Clean the appliance regularly to prevent the deterioration of the surface material.
- Switch off the appliance and let it cool down before cleaning.
- Do not use water spray and steam to clean the appliance.
- Clean the appliance with a moist soft cloth. Use only neutral detergents. Do not use abrasive products, abrasive cleaning pads, solvents or metal objects.
- Do not clean the burners in the dishwasher.

2.6 Service

- To repair the appliance contact the Authorised Service Centre. Use original spare parts only.
- Concerning the lamp(s) inside this product and spare part lamps sold separately: These lamps are intended to withstand extreme physical conditions in household appliances, such as temperature, vibration, humidity, or are intended to signal information about the operational status of the appliance. They are not intended to be used in other applications and are not suitable for household room illumination.

2.7 Disposal

WARNING!
Risk of injury or suffocation.

- For information on how to dispose of the appliance, contact your dealer, manufacturer's authorized person, or your local solid waste operator.
- Disconnect the appliance from the mains supply.
- Cut off the mains electrical cable close to the appliance and dispose of it.
- Flat the external gas pipes.

3. INSTALLATION

WARNING!
Refer to Safety chapters.

3.1 Before the installation

Before you install the hob, write down the information below from the rating plate. The rating plate is on the bottom of the hob.

Model .....
PNC .....
Serial number .....

3.2 Gas Connection

WARNING!
The following instructions about installation, connection and maintenance must be carried out by qualified personnel in compliance with standards and local regulations in force.

Choose fixed connections or use a flexible pipe in stainless steel in compliance with the regulation in force. If you use flexible metallic pipes, be careful they do not come in touch with mobile parts or they are not squeezed. Also be careful when the hob is put together with an oven.

Make sure that the gas supply pressure of the appliance obeys the recommended values. The adjustable connection is fixed to the comprehensive ramp by means of a threaded nut G 1/2". Screw the parts without force, adjust the connection in the necessary direction and tighten everything.

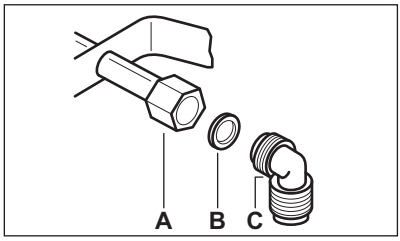

A. End of shaft with nut
B. Washer supplied with the appliance
C. Elbow supplied with the appliance

WARNING!
It is important to install the elbow correctly. Make sure that the shoulder is on the end of the thread. Then install it on the hob connecting pipe. Incorrect assembly may cause a gas leakage.

Liquid gas
Use the rubber pipe holder for liquid gas. Always engage the gasket. Then continue with the gas connection.

The flexible pipe is prepared for apply when:

- it can not get hot more than room temperature, higher than 30°C;
- it is no longer than 1500 mm;
- it shows no throttles;
- it is not subject to traction or torsion;
- it does not get in touch with cutting edges or corners;
- it can be easily examined in order to make sure its condition.

The control of preservation of the flexible pipe consists in checking that:

- it does not show cracks, cuts, marks of burnings on the two ends and on its full length;
- the material is not hardened, but shows its correct elasticity;
- the fastening clamps are not rusted;
- expired term is not due.

If one or more defects are visible, do not repair the pipe, but replace it.

WARNING!
When installation is complete, make sure that the seal of each pipe fitting is correct. Use a soapy solution, not a flame!

3.3 Injectors replacement

WARNING!
Information for authorised installer only.

1. Remove the pan supports.
2. Remove the caps and crowns of the burner.
3. With a socket spanner 7 remove the injectors and replace them with the ones which are necessary for the type of gas you use (see table in "Technical Data" chapter).
4. Assemble the parts, follow the same procedure backwards.
5. Attach the label with the new type of gas supply near the gas supply pipe. You can find this label in the package supplied with the appliance.

If the supply gas pressure is changeable or different from the necessary pressure, you must fit an applicable pressure adjuster on the gas supply pipe.

3.4 Adjustment of minimum level

WARNING!
Information for authorised installer only.

To adjust the minimum level of the burners:

1. Remove the knob.
   To remove the knob:
   a. In the opposite of the index, insert a flat screwdriver between the knob and a rubber gasket.
   b. Squeeze downward the gasket with a screwdriver.
   c. Move ahead the screwdriver to reach the lower face of locking clip.
   d. Pull the screwdriver up together with the knob.

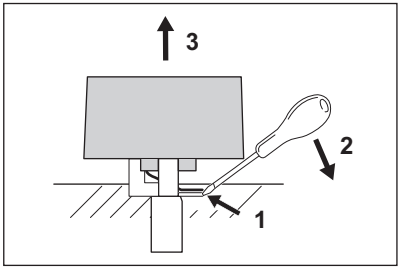

2. Using thin screwdriver lift up and remove the plastic magnet holder.

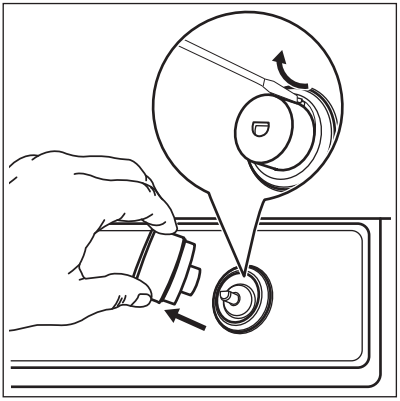

3. Ignite the shaft manually without the knob.
4. Turn the shaft on the minimum position.
5. With a thin screwdriver, adjust the bypass screw position (A).

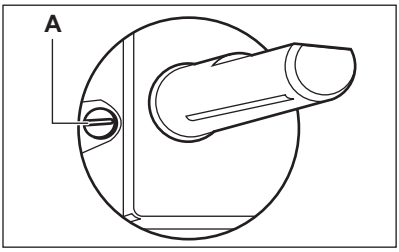

6. If you change:
   - from natural gas G20 13 mbar or natural gas G20 20 mbar to liquid gas, fully tighten the bypass screw in.
   - from liquid gas to natural gas G20 13 mbar, undo the bypass screw about 1/2 of a turn.
   - from liquid gas to natural gas G20 20 mbar, undo the bypass screw about 1/4 of a turn.
   - from natural gas G20 13 mbar to natural gas G20 20 mbar, tighten the bypass screw about 1/4 of a turn.
   - from natural gas G20 20 mbar to natural gas G20 13 mbar, undo the bypass screw about 1/4 of a turn.
7. Reassemble the magnet holder and the knob.

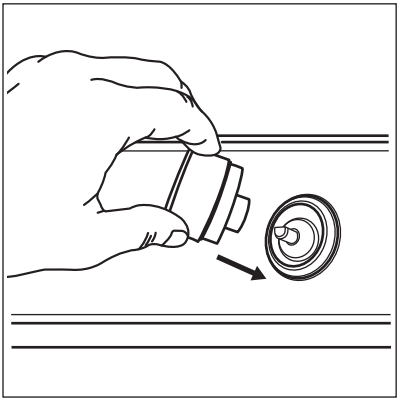

WARNING!
Make sure the flame does not go out when you quickly turn the knob from the maximum position to the minimum position.

3.5 Electrical connection

- Make sure that the rated voltage and type of power on the rating plate agree with the voltage and the power of the local power supply.
- This appliance is supplied with a mains cable. It has to be supplied with a correct plug which can hold the load that the rating plate rates. Make sure that you install the plug in a correct socket.
- Always use a correctly installed shockproof socket.
- Make sure that there is an access to the mains plug after the installation.
- Do not pull the mains cable to disconnect the appliance. Always pull the mains plug.
- There is a risk of fire when the appliance is in connection with an extension cable, an adapter or a multiple connection. Make sure that the ground connection agrees with the standards and regulations.
- Do not let the power cable to heat up to a temperature higher than 90° C.

If the pilot lights turn on after connecting the hob to the mains, turn on and off the control knob and wait until the residual heat indicator goes out.

3.6 Connection cable

To replace the connection cable use only the special cable or its equivalent. The cable type is: H03V2V2-F T90.

Make sure that the cable section is applicable to the voltage and the working temperature. The yellow / green earth wire must be approximately 2 cm longer than the brown (or black) phase wire.

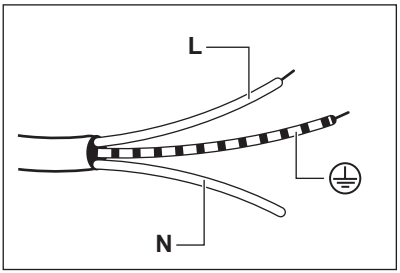

1. Connect the green and yellow (earth) wire to the terminal which is marked with the letter 'E', or the earth symbol ⏚, or coloured green and yellow.
2. Connect the blue (neutral) wire to the terminal which is marked with the letter 'N' or coloured blue.
3. Connect the brown (live) wire to the terminal which is marked with the letter 'L'. It must always be connected to the network phase.

3.7 Assembly

ON-TOP INSTALLATION

1.

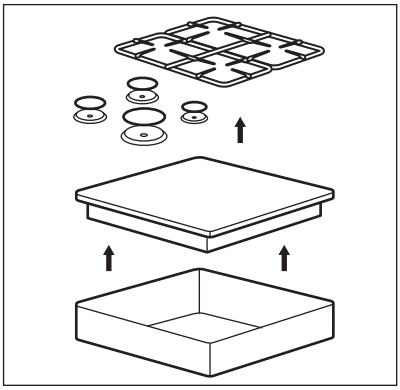

2.

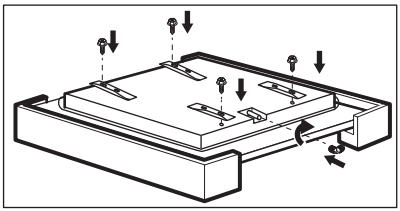

3.

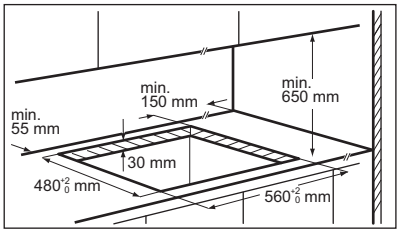

4.

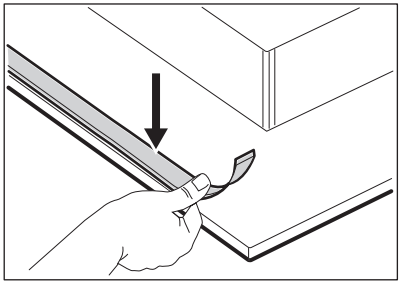

5.

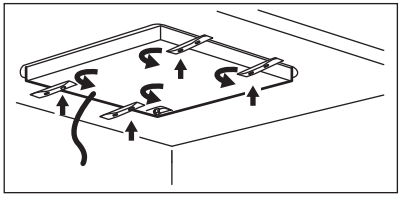

6.

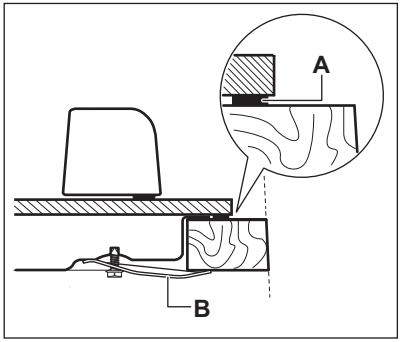

A. supplied seal
B. supplied brackets

7.

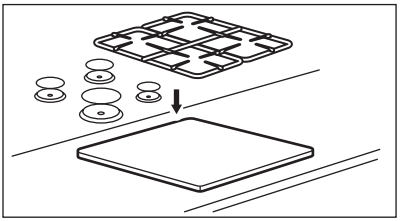

INTEGRATED INSTALLATION

1.

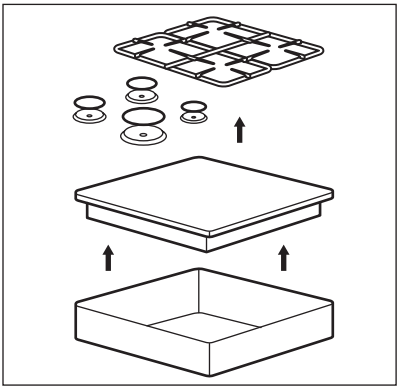

2.

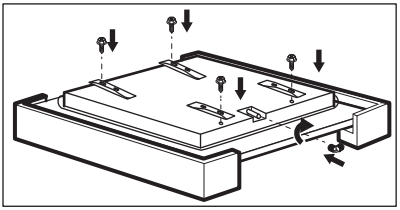

3.

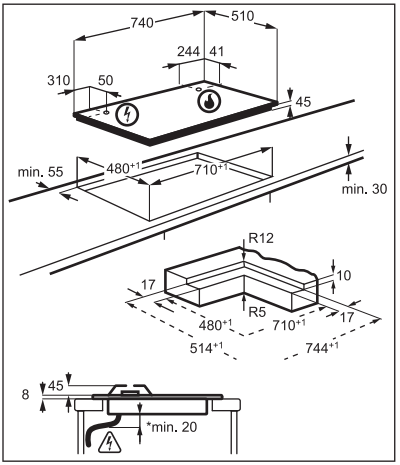

4.

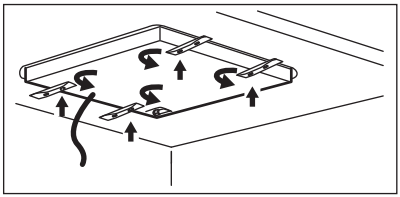

5.

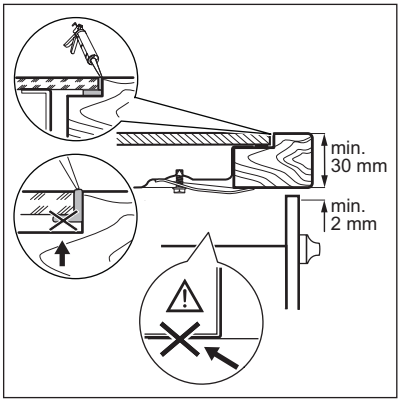

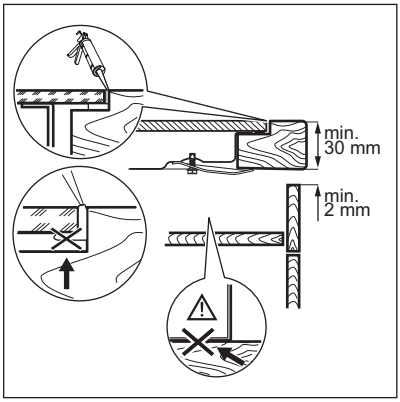

6.

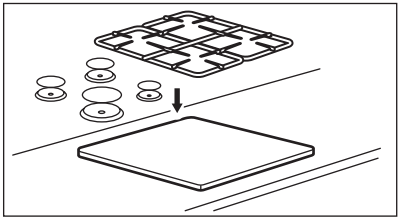

CAUTION!
Install the appliance only on a worktop with flat surface.

3.8 Installing hob under the hood

If you install the hob under a hood, please see the installation instructions of the hood for the minimum distance between the appliances.

3.9 Possibilities for insertion

The panel installed below the hob must be easy to remove and let an easy access in case a technical assistance intervention is necessary.

Kitchen unit with door

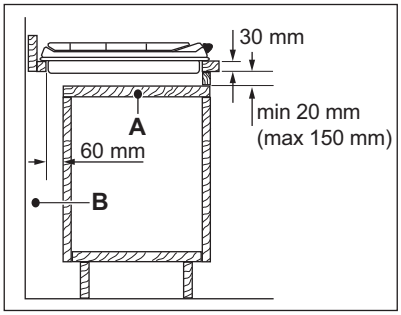

A. Removable panel
B. Space for connections

Kitchen unit with oven
The electrical connection of the hob and the oven must be installed separately for safety reasons and to allow for easy removal of the oven from the unit.

4. PRODUCT DESCRIPTION

4.1 Cooking surface layout

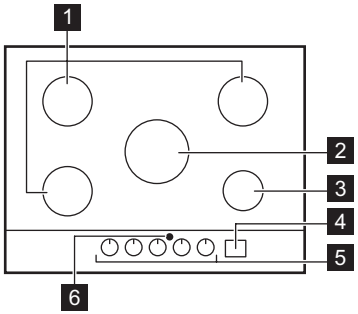

1 Semi-rapid burner
2 Ultra Rapid burner
3 Auxiliary burner
4 Control panel
5 Control knobs
6 Window for Hob²Hood infrared signal

4.2 Control panel layout

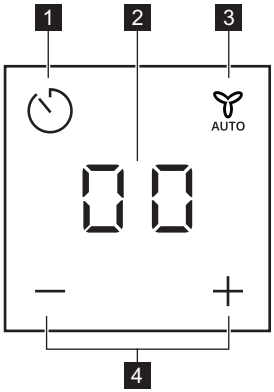

Use the sensor fields to operate the Minute Minder and Hob²Hood. The displays, indicators and sounds tell which functions operate.

	Sensor field	Function	Comment
1	⏲	-	To select the Timer function. To activate + / − and Hob²Hood icons.
2	-	Timer display	To show the time in minutes. To show Hob²Hood function and Hob²Hood Automatic Modes.
3	AUTO	Hob²Hood	To activate and deactivate the manual mode of the function.
4	+ / −	-	To increase or decrease the time. To switch Hob²Hood Automatic Modes.

Stand-by mode:
Press the ⏲ for at least 1 second to activate the display.

4.3 Control knob

Symbol	Description
●	no gas supply / off position
✶	ignition position / maximum gas supply

Symbol	Description
1	minimum gas supply
1 - 9	power levels

4.4 Residual heat

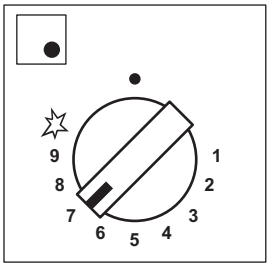

LEDs full light
Knob opened

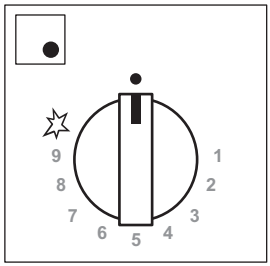

LEDs light slowly reduced
Residual heat starts

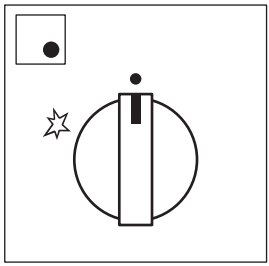

LEDs light off
Residual heat ends

WARNING!
There is a risk of burns from residual heat.

The residual heat indicator lights up when you turn off the burner.

Knob of the burner	Open knob			
	on < 20 sec	20 sec < on < 1 min	1 min < on < 5 min	on > 5 min
Ultra Rapid	0	30 sec	3 min	15 min
Semi-rapid (front left)	0	30 sec	3 min	10 min
Semi-rapid (rear left)	0	30 sec	3 min	10 min
Semi-rapid (rear right)	0	30 sec	3 min	10 min
Auxiliary	0	30 sec	3 min	5 min

5. DAILY USE

WARNING!
Refer to Safety chapters.

5.1 Burner overview

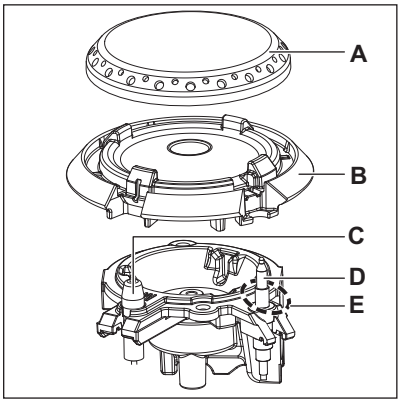

A. Burner cap
B. Burner crown
C. Ignition candle
D. Thermocouple
E. Pilot flame

5.2 Ignition of the burner

Always light the burner before you put on the cookware.

WARNING!
Do not light the burner when the flame spreader is removed.

WARNING!
Be very careful when you use open fire in the kitchen environment. The manufacturer declines any responsibility in case of the flame misuse.

1. Push the control knob down and turn it counterclockwise to the maximum gas supply position (☆).
2. Keep the control knob pushed for equal or less than 10 seconds. This lets the thermocouple warm up. If not, the gas supply is interrupted.
3. Adjust the flame after it is regular.

If after some tries the burner does not light, check if the crown and its cap are in correct positions.

WARNING!
Do not keep the control knob pushed for more than 15 seconds. If the burner does not light after 15 seconds, release the control knob, turn it into off position and try to light the burner again after minimum 1 minute.

CAUTION!
In the absence of electricity you can ignite the burner without electrical device; in this case approach the burner with a flame, turn the control knob counter-clockwise to maximum gas supply position and push it down. Keep the control knob pushed for equal or less than 10 seconds to let the thermocouple warm up.

If the burner accidentally goes out, turn the control knob to the off position and try to light the burner again after minimum 1 minute.

The spark generator can start automatically when you switch on the mains, after installation or a power cut. It is normal.

Each control knob is surrounded by highlighted numbers visible while Residual Heat function operates.

The hob is supplied with StepPower. This function allows you to set the power more precisely from 9-1.

WARNING!
If you do not switch the knob to the off position, after two hours a warning sound is emitted and the symbols flash red. It reminds you that the burner is on. To stop the sound, touch ⏲, AUTO, + or −.

The flame that surrounds the thermocouple is a pilot flame. It prevents unexpected shutdown.

5.3 Turning the burner off

To put the flame out, turn the knob to the off position ●.

WARNING!
Always turn the flame down or switch it off before you remove the pans from the burner.

5.4 Minute Minder

You can use this function as a Minute Minder.

1. Touch ⏲.

To activate the function.

2. Touch + or − of the timer to set the time (00 - 99 minutes).

When the time comes to an end, the sound operates and **00** flashes.

In the last minute the time decreases in seconds, and the last 10 seconds the timer emits a sound signal.

3. Touch ⏲, AUTO, + or −.

To stop the sound.

4. To stop the timer, touch longer ⏲.

You can use the Minute Minder at any time also if the appliance is off.

The function has no effect on the operation of the burners.

5.5 AUTO Hob²Hood

It is an advanced automatic function which connects the hob to a special hood. Both the hob and the hood have an infrared signal communicator. You can also operate the fan from the hob manually.

Manual modes:

Mode	Manual light	Fan speed
H0	Off	Off
HL	On	Off
H1	On	Level 1
H2	On	Level 2
H3	On	Level 3

To turn off the hood touch longer AUTO till H0 is displayed.

WARNING!
After end of cooking, the hood does not turn off automatically. Turn it off manually.

For most of the hoods, the remote system is originally deactivated. Activate it before you use the function. For more information refer to the hood user manual.

Setting default Hob²Hood procedure:

1. When timer is off, touch Minute Minder for 3 seconds. 00 comes on.
2. Touch + and − together until An comes on, n is a current automatic mode.
3. Touch + to select desired automatic mode.

After the Automatic Mode is selected, wait till it disappears from the display so that this setting is saved in Flash Memory and recalled at startup.

Repeat the same procedure to select another Hob²Hood Automatic Mode.

Automatic modes:

Mode	Description	H2H icon	H2H display	Automatic light	Fan speed
A0	No remote control	Off	Off	Off	Off
A1	Remote control	On	On	Off	Off
A2	H2H Auto Light	On	On	On	Off
A3	H2H Auto Speed 0-2 (factory default)	On	On	On	1
A4	H2H Auto Speed 1-3	On	On	On	1-3

A3	
Burner type on	**Speed**
AUX	1
SR	1
UR	1

A4	
Power (kW)	**Speed**
1-5	1

A4	
Power (kW)	**Speed**
6-8	2
9-11	3

6. HINTS AND TIPS

WARNING!
Refer to Safety chapters.

6.1 Cookware

CAUTION!
Do not use cast iron pans, clay or earthenware pots, grilling accessories or toaster plates.

WARNING!
Do not put the same pan on two burners.

WARNING!
Do not put unstable or damaged pots on the burner to prevent spills and injuries.

CAUTION!
Make sure that the bottoms of pots do not stand too close to the control knob, otherwise the flame heats the control knob up.

CAUTION!
Make sure that pot handles are not above the front edge of the cooktop.

CAUTION!
Make sure that the pots are placed centrally on the burner in order to get the maximum stability and a lower gas consumption.

CAUTION!
Liquids spilt during cooking can cause the glass to break.

6.2 Energy saving

- If it is possible, always put the lids on the cookware.
- When the liquid starts to boil, turn down the flame to barely simmer the liquid.

6.3 Diameters of cookware

CAUTION!
Use cookware with diameters applicable to the size of burners.

Burner	Diameter of cookware (mm)
Ultra Rapid	200 - 260
Semi-rapid (rear left)	160 - 240
Semi-rapid (rear right)	160 - 240
Semi-rapid (front left)	160 - 220
Auxiliary	120 - 220

6.4 Hints and Tips for Hob²Hood

When you operate the hob with the function:

- Protect the hood panel from direct sunlight.
- Do not spot halogen light on the hood panel.
- Do not cover the hob control panel.
- Do not interrupt the signal between the hob and the hood (e.g. with the hand, a cookware handle or a tall pot). See the picture.

The hood pictured below is for illustration purpose only.

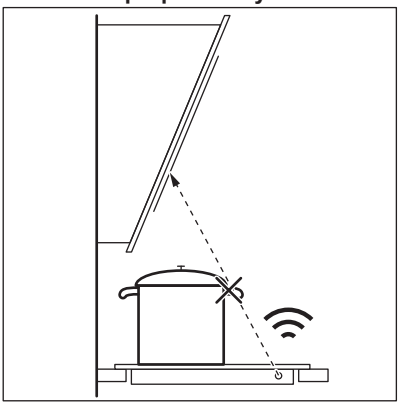

Keep the window for Hob²Hood infrared signal communicator clean.

Other remotely controlled appliances may block the signal. Do not use any such appliances near to the hob while Hob²Hood is on.

Cooker hoods with the Hob²Hood function
To find the full range of cooker hoods which work with this function refer to our consumer website. The AEG cooker hoods that work with this function must have the symbol AUTO.

6.5 Suggested recipes

Food categories	Recipes	Burner type	Heat up phase power level 1)	Cooking phase power level
Sauces - Dressing	Bechamel	Small	-	1-3
	Tomato sauce	Small	2-4	1-2

Food categories	Recipes	Burner type	Heat up phase power level [1]	Cooking phase power level
Pasta - Rice - other Cereals	Mushrooms rice	Large	-	6-8
	Couscous	Large	4-6	1-4
	Spaghetti	Large	-	7-9
	Ravioli	Large	-	7-9
Soup - Legumes	Vegetable soup	Medium	-	6-9
	Mushrooms and potatoes soup	Medium	-	6-9
	Fish soup	Large	-	1-2
Meat	Beef meatballs	Large	3-6	1-3
	Fillet of pork roast	Large	7-9	4-6
	Beef burger gratin	Medium	7-9	3-6
Fish	Sepia with peas	Large	-	1-3
	Roasted tuna steak	Large	7-9	4-6
Vegetables	Mushrooms with seasonings	Medium	-	5-8
	Caponata with vegetables	Large	4-6	1-4
	Boiled potatoes	Medium	-	7-9
	Frozen spinach with butter	Large	-	1-3
Fried dishes	French fries	Large	-	8-9
	Krapfen	Large	6-8	1
Snacks cooked with pan	Roasting nuts	Large	7-9	4-6
	Croutons of bread and escarole	Large	7-9	4-6
	Pancakes	Medium	7-9	2-5
Desserts	Caramel	Small	-	1-3
	Custard	Small	-	2-4
	Panna cotta	Small	-	3-6

[1] Useful to reach optimal cooking condition.

All recipes for approximately 4 portions.

The settings suggested in the cooking table should only serve as guidelines and be adjusted depending on the rawness of food, its weight and quantity as well as on the type of gas used and the material of the cookware used to prepare the dish.

7. CARE AND CLEANING

WARNING!
Refer to Safety chapters.

7.1 General information

- Clean the hob after each use.
- Clean the hob when all light are off. The Minute Minder may stay activated.
- Always use cookware with a clean base.
- Use a special cleaner suitable for the surface of the hob.
- Wash stainless steel parts with water, and then dry them with a soft cloth.
- Scratches or dark stains on the surface have no effect on how the hob operates.

The presence of water or other liquids on the control panel can accidentally activate or deactivate the hob functions.

WARNING!
Do not use knives, scrapers or similar instruments to clean the surface of the glass or the rims of the burners and the frame (if applicable).

You can wash the burner crown in a dishwasher.

CAUTION!
Do not clean the burner crown with abrasive products, abrasive cleaning pads, solvents or metal objects. Burner crown may cause discoloration.

7.2 Pan supports

The pan supports are not resistant to washing in a dishwasher. They must be washed by hand.

1. Remove the pan supports to easily clean the hob.

   Be very careful when you replace the pan supports to prevent the hob top from damage.
2. The enamel coating occasionally can have rough edges, so be careful when you wash the pan supports by hand and dry them. If necessary, remove stubborn stains with a paste cleaner.
3. After you clean the pan supports, make sure that they are in correct positions.
4. For the burner to operate correctly, make sure that the arms of the pan supports are aligned with the centre of the burner.

7.3 Removing and assembling pan supports

After cleaning of the hob, make sure that pan supports are in a correct position. In

order to place a pan support properly, make sure that its arms fits the grips placed at the base of the burner as shown in the picture. This way, a pan support is stable and fixed.

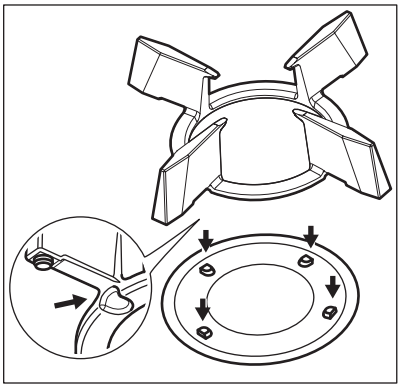

7.4 Cleaning the hob

- **Remove immediately:** melted plastic, plastic foil, salt, sugar and food with sugar, otherwise, the dirt can cause damage to the hob. Take care to avoid burns.
- **Remove when the hob is sufficiently cool:** limescale rings, water rings, fat stains, shiny metallic discoloration. Clean the hob with a moist cloth and a non-abrasive detergent. After cleaning, wipe the hob dry with a soft cloth.
- To clean the enamelled parts, caps and crowns, wash them with warm soapy water and dry them carefully before you put them back on.

7.5 Cleaning the flame spreader

You can wash the flame spreaders in a dishwasher.

WARNING!
Let the flame spreaders cool down before you clean them.

Light stains:
Wash the flame spreader with warm water and soap and dry it with a soft cloth.

Medium stains:
Use the dishwasher. Place the flame spreader on the bottom rack in a flat position, with the top side up.

Heavy stains:
Clean the flame spreader with warm water and soap, then wash it in the dishwasher. If the stain is still present wash the top of the flame spreader with a grill cleaner and run through the dishwasher again.

Use a toothpick to clean the holes of the flame spreader.

7.6 Cleaning the spark plug

This feature is obtained through a ceramic ignition candle with a metal electrode. Keep these components well clean to prevent difficult lighting and check that the burner crown holes are not obstructed.

7.7 Periodic maintenance

Speak to your local Authorised Service Centre periodically to check the conditions of the gas supply pipe and the pressure adjuster, if fitted.

8. TROUBLESHOOTING

WARNING!
Refer to Safety chapters.

8.1 What to do if...

Problem	Possible cause	Remedy
There is no spark when you try to activate the spark generator.	The hob is not connected to an electrical supply or it is connected incorrectly.	Check if the hob is correctly connected to the electrical supply.
	The fuse is blown.	Make sure that the fuse is the cause of the malfunction. If the fuse is blown again and again, contact a qualified electrician.
	Burner cap and crown are placed incorrectly.	Place the burner cap and crown correctly.
	Flame spreader is placed incorrectly.	Place the flame spreader correctly.
The flame extinguishes immediately after ignition.	Thermocouple is not heated up sufficiently.	After lightning the flame, keep the knob pushed for equal or less than 10 seconds.
The flame ring is uneven.	Burner crown is blocked with food residues.	Make sure that the injector is not blocked and the burner crown is clean.
The control panel brightness is reduced or it switches off.	The temperature of the plate is high. To ensure long lifetime of the display the brightness is reduced depending on the temperature of the hob. Above a certain temperature the control panel switches off.	Let the hob cool down.
The control knob pilot lights turn on after connecting the hob to the mains or after a power outage.	Pilot light test.	Refer to "Installation".
Hob²Hood function does not work.	You covered the control panel.	Remove the object from the control panel.
You cannot activate or operate Hob²Hood and Minute Minder.	There is water or fat stains on the control panel.	Clean the control panel.
The display shows **"E t"**	-	Turn off the control knobs and wait until the display is off or disconnect the appliance to the main to return to the initial condition.

Problem	Possible cause	Remedy
AUTO does not shows up when knobs are opened.	Selected Automatic Mode is A0.	Refer to "Daily use".

8.2 If you cannot find a solution...

If you cannot find a solution to the problem yourself, contact your dealer or an Authorised Service Centre. Give the data from the rating plate. Make sure, you operated the hob correctly. If not the servicing by a service technician or dealer will not be free of charge, also during the warranty period. The information about guarantee period and Authorised Service Centres are in the guarantee booklet.

8.3 Labels supplied with the accessories bag

Stick the adhesive labels as indicated below:

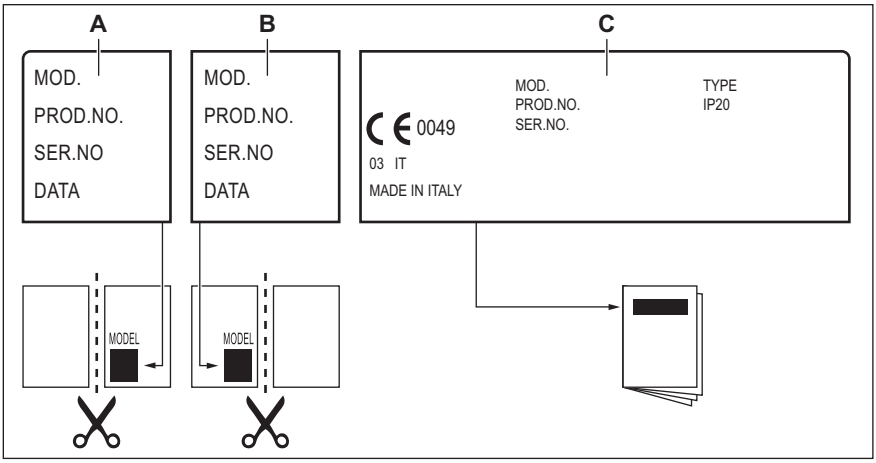

A. Stick it on Guarantee Card and send this part (if applicable).
B. Stick it on Guarantee Card and keep this part (if applicable).
C. Stick it on instruction booklet.

9. TECHNICAL DATA

9.1 Hob dimensions

Width	740 mm
Depth	510 mm

9.2 Bypass diameters

BURNER	Ø BYPASS 1/100 mm
Ultra Rapid	57
Semi-rapid	32
Auxiliary	28

9.3 Other technical data

TOTAL POWER:	Gas original:	G20 (2H) 20 mbar	10,35 kW
	Gas replacement:	G30/G31 (3B/P) 30/30 mbar G20 (2H) 13 mbar	716 g/h 10,15 kW
Electric supply:	220-240 V ~ 50-60 Hz		
Appliance category:	II2H3B/P		
Gas connection:	G 1/2"		
Appliance class:	3		

9.4 Gas burners for NATURAL GAS G20 20 mbar

BURNER	NORMAL POWER kW	MINIMUM POWER kW	INJECTOR MARK
Ultra Rapid	3,8	1,4	151
Semi-rapid	1,85	0,45	103x
Auxiliary	1,0	0,33	79x

9.5 Gas burners for NATURAL GAS G20 13 mbar

BURNER	NORMAL POWER kW	MINIMUM POWER kW	INJECTOR MARK
Ultra Rapid	3,5	1,4	158X
Semi-rapid	1,9	0,45	115A
Auxiliary	0,95	0,33	83

Installation kit to be ordered from Authorised Service Centre.

9.6 Gas burners for LPG G30/G31 30/30 mbar

BURNER	NORMAL POWER kW	MINIMUM POWER kW	INJECTOR MARK	NOMINAL GAS FLOW kW
Ultra Rapid	3,3	1,75	90x	240
Semi-rapid	1,85	0,55	67	134
Auxiliary	1,0	0,45	52	73

10. ENVIRONMENTAL CONCERNS

Recycle materials with the symbol ♺. Put the packaging in relevant containers to recycle it. Help protect the environment and human health by recycling waste of electrical and electronic appliances. Do not dispose of appliances marked with the symbol with the household waste. Return the product to your local recycling facility or contact your municipal office.

www.aeg.com/shop





867367941-B-252022

EAC CE

AEG