



43" Professional Digital Signage display with 4K UHD resolution

Set in a slim bezel, the iiyama LE4341UHS is a professional digital signage display offering 18/7 operating time and landscape orientation.

The 4K UHD resolution (3840x2160) provides exceptional colour and image performance. With the built-in media player you can play your favourite music and show your most beautiful videos, photos and images directly on screen.



4K

UHD resolution (3840x2160), better known as 4K, offers a gigantic viewable area with 4 times more information and work space than a Full HD screen. Due to the high DPI (dots per inch), it displays an incredibly sharp and crisp image.



Media player

Play your favourite music and show your most beautiful videos, photos and images directly on screen from a flash drive or internal memory with the built-in media player.

01 DISPLAY CHARACTERISTICS

Design	Thin bezel
Diagonal	42.5", 108cm
Panel	IPS, haze 1%
Native resolution	3840 x 2160 (8.3 megapixel 4K UHD)
Aspect ratio	16:9
Panel brightness	350 cd/m²
Static contrast	1200:1
Response time (GTG)	8ms
Viewing zone	horizontal/vertical: horizontal°/vertical 178°, right/left: 0°/0°, up/down: 0°/0°
Colour support	1.07B 10bit (8bit + Hi-FRC) (NTSC 72%)
Horizontal Sync	30 - 83kHz
Viewable area W x H	941.2 x 529.4mm, 37.1 x 20.8"
Pixel pitch	0.245mm
Bezel colour and finish	black, glossy

02 INTERFACES / CONNECTORS / CONTROLS

Analog signal input	VGA x1 (max. 1920x1080 @60Hz)
Digital signal input	HDMI x3 (max. 3840x2160 @60Hz)
Audio input	Mini jack x1
Monitor control input	RS-232c x1 RJ45 (LAN) x1 IR x1
Audio output	RCA (L/R) x1 Speakers 2 x 10W
Monitor control output	RS-232c x1 IR loop through x1
HDCP	2.2
USB ports	x1 (2.0, FW update support)

03 FEATURES

Max. non-stop operating time	18/7
Anti image retention	yes
Media playback	yes
Housing (bezel)	plastic

04 GENERAL

OSD languages	EN, DE, FR, ES, IT, CN, RU, JP, CZ, NL, PL
Control buttons	Power, Mute, Input, Plus, Minus, Up, Down, Menu
User controls	picture (picture format, colour temp., noise reduction, dynamic contrast, gamma, brightness, black level, colour, contrast, hue, sharpness, RGB range, reset), Sound (treble, bass, balance, speaker, audio output, reset), general settings 1 (menu languages, clock, schedule, HDMI CEC link, HDMI modes, communication setting), screen (auto adjust, clock, phase, H. position, V. position, reset), general settings 2 (auto power off, network standby, power management, auto signal detection, auto play, local KB lock, RC lock, monitor ID, LED, pixel shift, information, factory reset)

05 MECHANICAL

Orientation	landscape
Fanless design	yes
VESA mounting	400 x 400mm
Operation temperature range	0°C - 40°C
Storage temperature range	- 20°C - 60°C
MTBF	50000 hours (excluding backlight)

06 ACCESSORIES INCLUDED

Cables	power, HDMI, RS-232c
Guides	quick start guide, safety guide
Remote control	yes (batteries included)

07 POWER MANAGEMENT

Power supply unit	internal
Power supply	AC 100 - 240V, 50/60Hz
Power usage	117W typical, 0.5W stand by, 0.3W off mode

08 SUSTAINABILITY

Regulations	CB, CE, TÜV-Bauart, EAC, RoHS support, ErP, WEEE, REACH
Energy efficiency class (Regulation (EU) 2017/1369)	G
REACH SVHC	above 0.1%: Lead

09 DIMENSIONS / WEIGHT

Product dimensions W x H x D	972 x 560 x 67.5mm
Box dimensions W x H x D	1070 x 690 x 139mm
Weight (without box)	8.8kg
Weight (with box)	12.3kg
EAN code	4948570120932

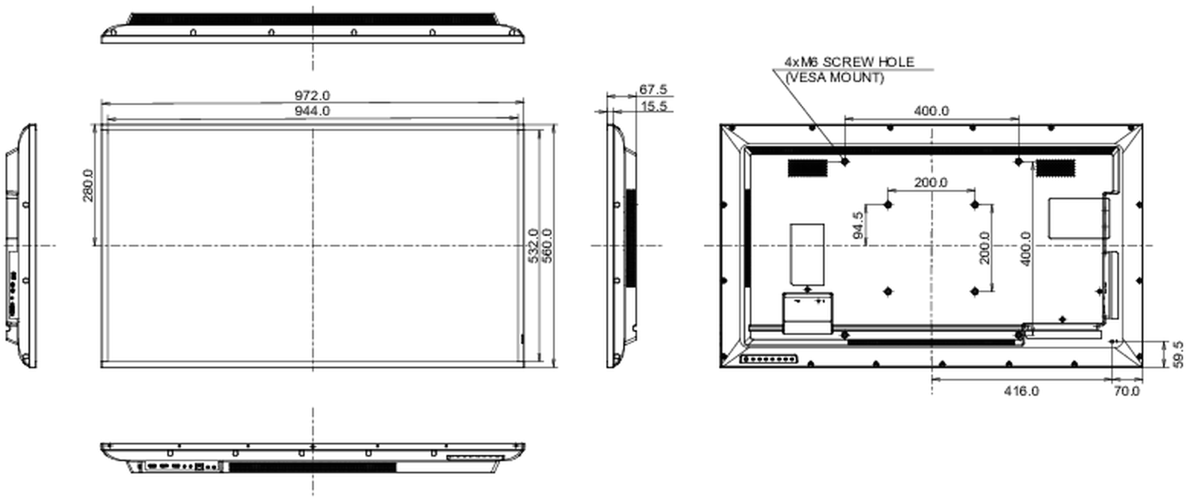

All trademarks and registered trademarks acknowledged. E & O E. Specification subject to change without notice. All LCD's comply with ISO-9241-307:2008 in connection with pixel defects.

© IIYAMA CORPORATION. ALL RIGHTS RESERVED