User Manual Easy UPS On-Line SRV15KUXI-IN/SRV20KUXI-IN

Important Safety Instructions

SAVE THESE INSTRUCTIONS - This manual contains important instructions that should be followed during installation and maintenance of the UPS.

Read these instructions carefully and look at the equipment to become familiar with the device before trying to install, operate, service or maintain it. The following special messages may appear throughout this manual or on the equipment to warn of potential hazards or to call attention to information that clarifies or simplifies a procedure.



The addition of this symbol either to a “Danger” or “Warning” safety label indicates that an electrical hazard exists which will result in personal injury if the instructions are not followed.



This is the safety alert symbol. It is used to alert you to potential personal injury hazards. Obey all safety messages that follow this symbol to avoid possible injury or death.

⚠ DANGER

DANGER indicates a hazardous situation which, if not avoided, will result in death or serious injury.

⚠ WARNING

WARNING indicates a hazardous situation which, if not avoided, could result in death or serious injury.

⚠ CAUTION

CAUTION indicates a hazardous situation which, if not avoided, could result in minor or moderate injury.

NOTICE

***NOTICE* is used to address practices not related to physical injury.**

Product Handling Guidelines













<18 kg	18-32 kg	32-55 kg	>55 kg
<40 lb	40-70 lb	70-120 lb	>120 lb

Safety and General Information

Inspect the package contents upon receipt. Notify the carrier and dealer if there is any damage.

Read the Safety Guide before installing the Easy UPS.

- This UPS is for indoor use only.
- Do not operate the UPS in direct sunlight, in contact with fluids, or where there is excessive dust or high humidity.
- Do not operate the UPS near open windows or doors.
- Be sure the air vents on the UPS are not blocked. Allow adequate space for proper ventilation.
- NOTE: Allow a minimum of 20 cm clearance on both front and rear sides of the UPS.
- Environmental factors impact battery life. Elevated ambient temperatures and poor quality utility power causing frequent discharges will shorten battery life. Follow the battery manufacturer recommendations.

Electrical safety

- When grounding cannot be verified, disconnect the equipment from the utility power outlet before installing or connecting to other equipment. Reconnect the power cord only after all connections are made.
- Connection to the branch circuit (mains) must be performed by a qualified electrician.
- The protective earth conductor for the UPS carries the leakage current from the load devices (computer equipment). An insulated ground conductor is to be installed as part of the branch circuit that supplies input power to the UPS. The conductor must have the same size and insulation material as the grounded and ungrounded branch circuit supply conductors. The conductor will be green and with or without a yellow stripe.
- The grounding conductor is to be grounded to earth at the service equipment, or if supplied by a separately derived system, at the supply transformer or motor generator set.

Battery safety

- Servicing of batteries should be performed or supervised by personnel knowledgeable about batteries and the required precautions. In this case batteries is not user replaceable.
- Over charging, over heating or other misuse of batteries can result in leakage of battery electrolyte. Released electrolyte is toxic and may be harmful to the skin and eyes.
- CAUTION: Before installing or replacing the batteries, remove jewelry such as wristwatches and rings. High short circuit current through conductive materials could cause severe burns.
- CAUTION: Do not dispose of batteries in a fire. The batteries may explode.
- CAUTION: Do not open or mutilate batteries. Released material is harmful to the skin and eyes and may be toxic.
- CAUTION: A battery can present a risk of electric shock and burns by high short-circuit current. Contact with any part of a grounded battery can result in electrical shock. The following precautions should be observed when working on batteries:
  - Remove watches, rings, or other metal objects.
  - Use tools with insulated handles.
  - Wear rubber gloves and boots.
  - Do not lay tools or metal parts on top of batteries.
  - Disconnect charging source and load prior to installing or maintaining the battery.
  - Remove battery grounds during installation and maintenance to reduce likelihood of shock. Remove the connection from ground if any part of the battery is determined to be grounded.
- CAUTION: Failed batteries can reach temperatures that exceed the burn thresholds for touchable surfaces.

Hardwiring safety

- Verify that all branch circuit (mains) and low voltage (control) circuits are de-energized, and locked out before installing cables or making connections, whether in the junction box or to the UPS.
- Wiring by a qualified electrician is required.
- Adhere to national and local codes.
- Select wire size and connectors according to national and local codes.
- All openings allowing access to UPS hardwiring terminals must be covered. Failure to do so may result in personal injury or equipment damage.

Radio frequency warning

This UPS is a category C3 product as per IEC 62040-2, meant for commercial and industrial application in the second environment - installation restrictions or additional measures may be needed to prevent disturbances.

NOTE: To maintain compliance with the EMC directive for products, output cords connected to the UPS should not exceed 10 meters in length.

Product Description

The APC by Schneider Electric Online UPS is a high performance, uninterruptible power supply (UPS). The Online UPS helps to provide protection to connected equipment from utility power blackouts, brownouts, sags, surges, small utility fluctuations and large disturbances. The Online UPS also provides battery backup power to connected equipment until utility power returns to normal levels or the batteries are fully discharged.

This user manual is available on the enclosed Documentation CD and on the APC by Schneider Electric Web site, www.apc.com.

Package Contents

UPS 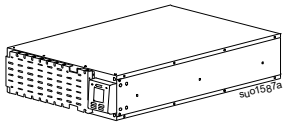		Front bezel 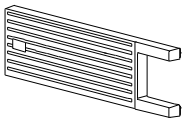	User documentation 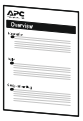
Software, User documentation CD 	Open Grommets (7) 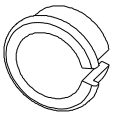	USB cable 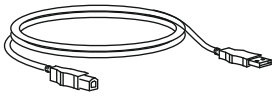	Serial communication cable 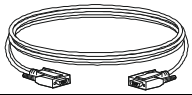
Battery Cable (Optional) 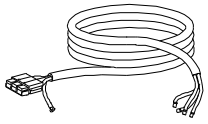	Stabilizer brackets (2 pairs) 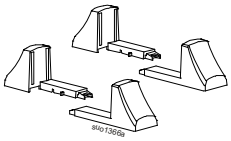	Flat head screws (8) 	Rack-mount bracket (1 pair) 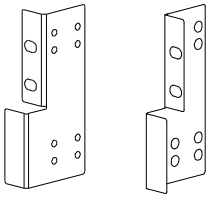
Battery Connector Clamp (Optional) 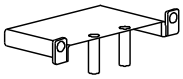	1U Foot extension (4) 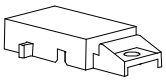	Foot stand screws (8) 	
Accessories for three phase input single phase output configuration (Bag 3:1)			
Ring terminal (3) 			
Accessories for three phase input three phase output configuration (Bag 3:3)			
Shorting Jumper SJ4 (1) 	Shorting Jumper SJ5 (1) 	Shorting Jumper SJ6 (1) 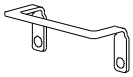	Ring terminal (6) 
Accessories for single phase input single phase output configuration (Bag 1:1)			
Shorting Jumper SJ1 (1) 	Shorting Jumper SJ3 (1) 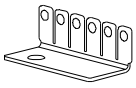	Screw for fastening lug to shorting jumpers (2) 	

NOTE:

- The model and serial numbers are located on a label in the rear panel.
- The packaging is recyclable; save it for reuse or dispose of it properly.

Optional Accessories

Refer to APC by Schneider Electric Web site, www.apc.com, for available accessories.

Specifications

Environmental

NOTICE

RISK OF EQUIPMENT DAMAGE

- UPS must be used indoors only.
- The installation location should be sturdy to withstand the weight of the UPS.
- Do not operate UPS where there is excessive dust or where the temperature or humidity are outside specified limits.

Failure to follow these instructions can result in equipment damage.

Temperature	**Operating**	• 0 to 40 °C at rated load • 40 to 45 °C linearly derated to 85% of maximum load capacity • 45 to 50 °C linearly derated to 75% of maximum load capacity
	Storage	-20 to 60 °C
Elevation	**Operating**	• 0 to 1,000 m: Normal operation • 1,000 to 3,000 m: The output power reduces @ 1% for every 100 m increase in elevation • > 3,000 m: UPS will not work
	Storage	0 to 15,000 m
Humidity		0 to 95% relative humidity, non-condensing
International Protection Code		IP20

Physical

The UPS is heavy. Follow all lifting guidelines.

Dimensions with package Height x Width x Depth	250 x 580 x 870 mm (9.84 x 22.83 x 34.25 in)
Dimensions without package Height x Width x Depth	130.6 x 438.0 x 689.4 mm (5.14 X 17.24X 27.14 in)
Weight with package (approx.)	35.9 kg
Weight without package (approx.)	29 kg

Electrical

Model	**Rating**	**Phases**		**Building Circuit Breaker (CB) Current Rating (D type)**
		Input	**Output**	
SRV15KUXI-IN	15 kVA	1	1	100 A
		3	1	50 A; 100 A*
		3	3	50 A
SRV20KUXI-IN	20 kVA	1	1	150 A
		3	1	50 A; 125 A*
		3	3	50 A

NOTE: * Circuit Breaker (CB) rating for Bypass line.

Input specifications

Nominal input voltage	230 VAC (Ph - N)
Input frequency	50/60 Hz nominal
Input voltage range (100% load) - Single Phase Power gets derated to 50%	176 to 275 VAC (Ph - N) 275 to 300 VAC (Ph - N)
Input voltage range (80% load)	150 to 300 VAC (Ph - N)
Input voltage range (50% load)	110 to 300 VAC (Ph - N)
Input power factor (100% resistive load at nominal voltage)	≥ 0.99
Input over current protection	Fuse

Note: The voltages in the above table are Single Phase (Ph - N) values. The corresponding Three Phase value will be √3 times the Single Phase value.

Output specifications

		SRV15KUXI-IN	SRV20KUXI-IN
UPS Capacity	**Battery Voltage = ±96 VDC**	15 kVA / 12 kW	20 kVA / 16 kW
	Battery Voltage = ±108 VDC	15 kVA / 13.5 kW	20 kVA / 18 kW
	Battery Voltage = ±120 VDC	15 kVA / 15 kW	20 kVA / 20 kW
Nominal output voltage		230/400 VAC	
Other programmable voltage		220/380 VAC, 240/415 VAC	
Efficiency at rated load		95%	
Output voltage regulation		±1% of initial value	
Output voltage distortion		• < 2% for full linear load • < 4% for full non linear load • < 15% for the last 60 seconds of the backup time	
Frequency - On battery		50/60 Hz ± 0.5%	
Frequency - AC mode		50/60 Hz ± 3 Hz	
Crest factor		3:1	
Waveform		Sinewave	
Output connection		Refer “Rear panel features” on page 10 for details	
Bypass		Internal	
Bypass range		185 - 250 VAC ± 1% (Ph-N) 320 - 433 VAC ± 1% (Ph-Ph)	

Battery bank

⚠ CAUTION

RISK OF HYDROGEN SULPHIDE GAS AND EXCESSIVE SMOKE

- Replace the battery at least every 5 years or at the end of its service life, whichever is earlier.
- Replace the battery immediately when the UPS indicates battery replacement is necessary.
- Replace batteries with the same number and type of batteries as originally connected to the UPS.
- Replace the battery immediately when the UPS indicates a battery over-temperature condition, or when there is evidence of electrolyte leakage. Power off the UPS, unplug it from the AC input, and disconnect the batteries. Do not operate the UPS until the batteries have been replaced.
- Replace all batteries which are older than one year, when installing additional batteries or replacing the batteries.

Failure to follow these instructions can result in minor or moderate injury and equipment damage.

Configuration	External battery
Type	• Sealed maintenance free valve regulated lead acid • Tubular type
Battery voltage	±96 VDC, ±108 VDC, ±120 VDC ±120 VDC Nominal
External battery pack model	SRV120RLBP2-9A

NOTE:

- It is recommended to use batteries having capacity of more than 26 Ah and less than 120 Ah.
- Use batteries which can withstand:
  - boost voltage of 15 V
  - float voltage of 13.8 V
- Maintenance of battery should be done at regular intervals.

Installation

Tower installation

⚠ CAUTION

RISK OF FALLING EQUIPMENT

- The UPS is heavy.
- Always practice safe lifting techniques adequate for the weight of the equipment.
- Do not lift the UPS by holding the front panel display.
- Be sure that the stabilizer brackets are installed along with the UPS in the tower orientation.

Failure to follow these instructions can result in minor or moderate injury and equipment damage.

Front panel display rotation

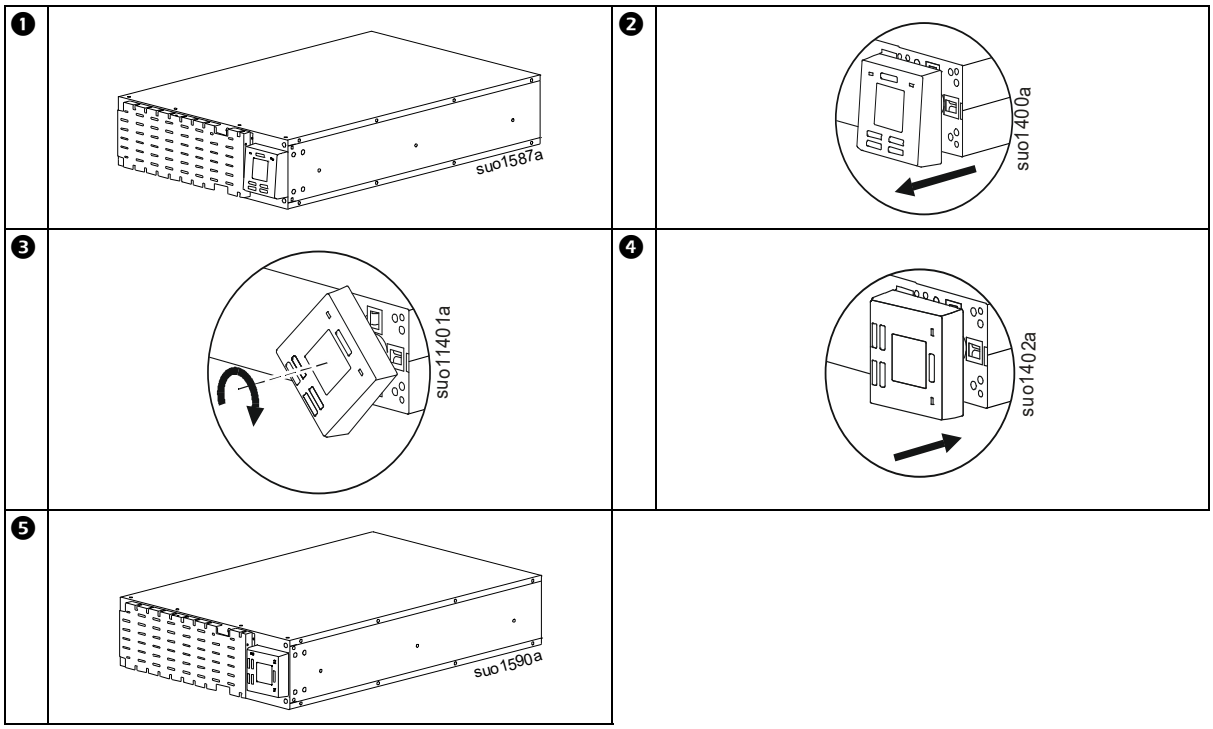

Installing stabilizer brackets

❶ Assemble the 1U extension pieces to the stabilizer brackets.

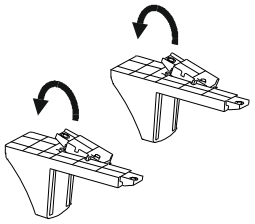

❷

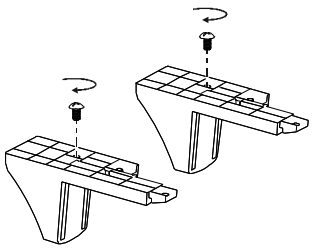

❸

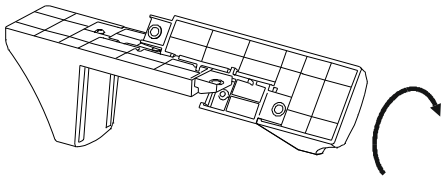

❹

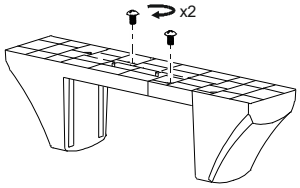

❺

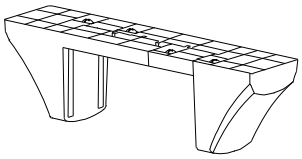

❻

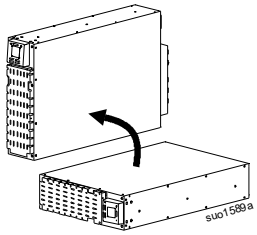

❼

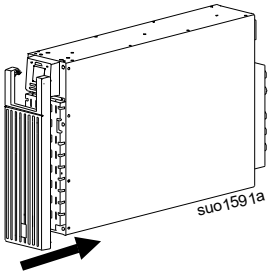

❽

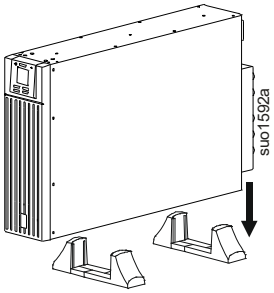

❾

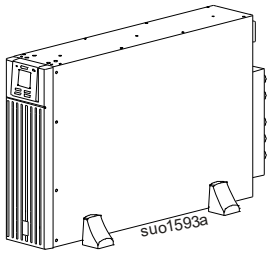

NOTE: Maintain approximately 70 mm distance from the edge of the unit, when installing the stabilizer brackets to the UPS.

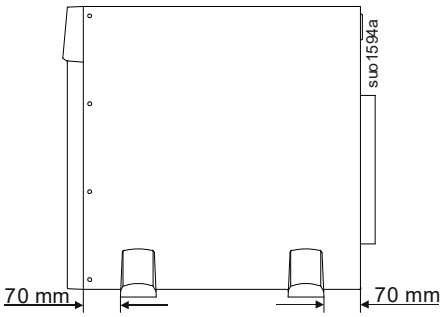

Rack-mounting

⚠ CAUTION

RISK OF FALLING EQUIPMENT

- The UPS is heavy.
- Always practice safe lifting techniques adequate for the weight of the equipment.
- Do not lift the UPS by holding the front panel display.
- Always install the UPS at the bottom of the rack.
- Always use the recommended number of screws to secure brackets to the UPS.
- Given the heavy weight, the use of rack-mount brackets is mandatory during rack installation (guide with L-shaped support).
- Secure the unit in the rack using all the screws supplied for the purpose.

Failure to follow these instructions can result in minor or moderate injury and equipment damage.

Optional Rail Kit accessories SRVRK2 to enable the installation of UPS in rack-mount configuration is available for purchase.

❶ Install the rack-mount brackets. 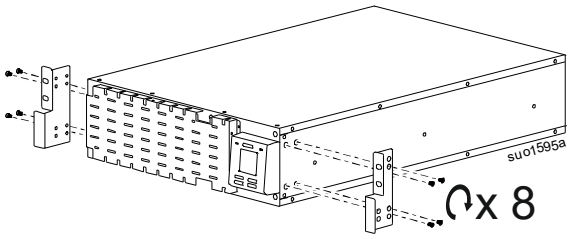	❷ Lift the UPS module and slide it into rack enclosure. 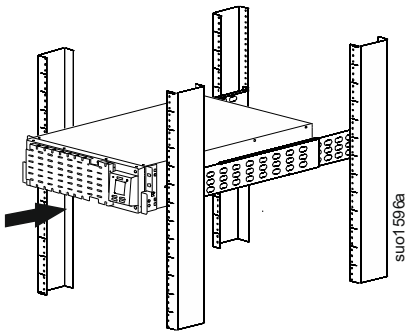
❸ Secure the UPS module to the rack with screws, nuts and washers (not supplied). 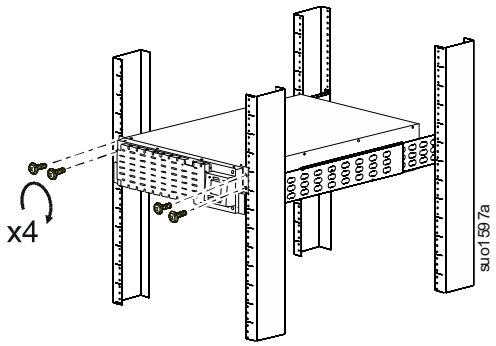	❹ Install the front bezel. 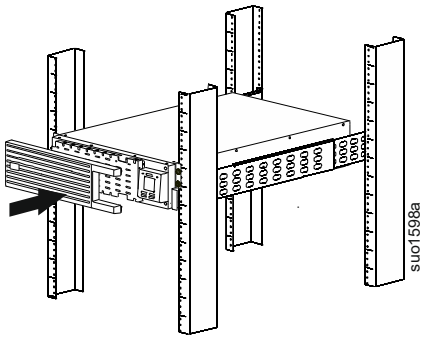

Rear panel features

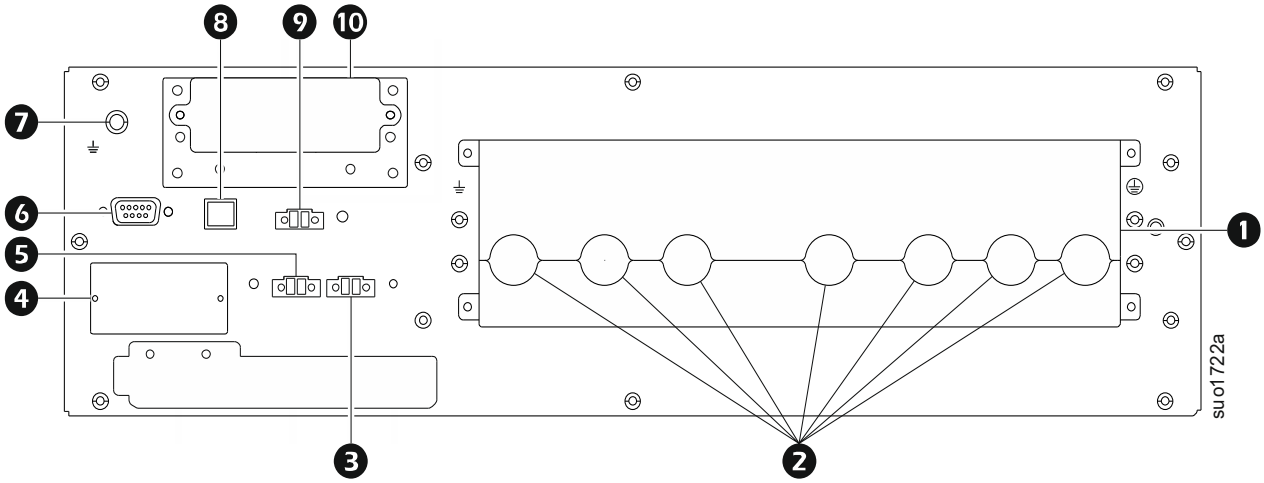

❶	Input and output terminal block. Refer “Connect battery bank to UPS” on page 11 for terminal block details.
❷	Closed grommet
❸	Backfeed signal connector (disabled)
❹	Intelligent slot for management accessories
❺	External maintenance bypass signal connector (disabled)
❻	Serial communication port
❼	Ground terminal
❽	USB communication port
❾	Emergency power off (EPO) connector
❿	Battery connector

Connect battery bank to UPS

⚠ CAUTION

RISK OF ELECTRIC SHOCK

- Adhere to all national and local electrical codes.
- All electrical work must be performed by a qualified electrician.
- Identify the polarities of the battery terminals before connecting the battery. Be sure grounding (green cable) is connected firmly.
- Do not short the battery terminals.
- Do not touch multiple terminals in the battery strings at the same time.
- Do not wear jewelry when working with electrical equipment.

Failure to follow these instructions can result in moderate injury.

NOTICE

RISK OF IMPROPER CONNECTION

Connect the battery according to the battery voltage indicated on the rear panel. If the connected battery voltage is incorrect, UPS may be damaged and cannot be repaired. Be sure to confirm that the battery voltage is in accordance with the UPS specification.

Failure to follow these instructions could result in equipment damage.

1. Crimp appropriate size lugs suitable for the battery terminals to the other end of the battery connection cable.
2. Connect the lugs of the positive (red color), negative (black color), and common (blue color) wires, to the positive, negative, and common terminals respectively, on the battery bank. Refer the illustration below.

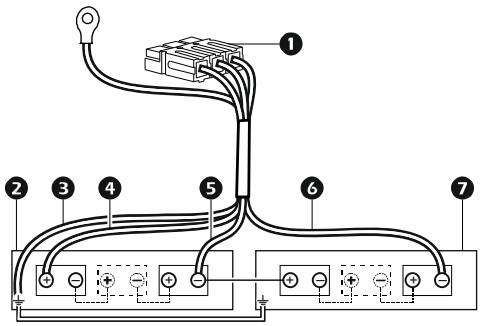

1	Battery connector
2	Positive battery bank
3	Ground wire
4	Red wire
5	Blue wire
6	Black wire
7	Negative battery bank

3. Locate the battery connector receptacle cover on rear panel of UPS.
4. Remove the screws securing the battery connector receptacle cover and remove the cover.
5. Connect one end of the ground wire of the battery connection cable to the metal frame housing the batteries and the other end to the ground terminal on the UPS (refer image under *step 8*).
   NOTE: If a metal frame is not used for housing the batteries, then be sure to properly insulate this ground wire at both ends.
6. Insert the clamp (supplied) to the battery cable connector.

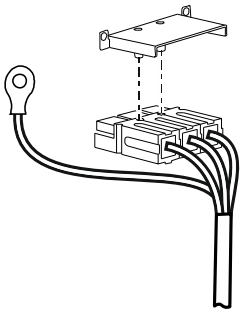

7. Plug the battery cable connector (with the clamp) into the battery connector receptacle on the UPS.
   NOTE: Be sure that the polarities are correct while plugging in the battery connector.
8. Insert and tighten the screws removed in *step 4* to secure the battery connector (with the clamp) receptacle to the battery connector of UPS.

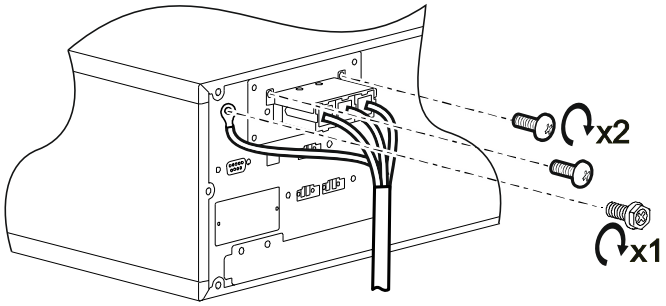

9. Secure the ground wire to the ground terminal on the UPS using the screw provided.
   NOTE: The tightening torque of 25 kgf cm to be applied for tightening the ground screw.

Change number of batteries connected / battery voltage

Contact APC by Schneider Electric Customer Support for the procedure to change the number of batteries connected or the battery voltage. The options available are ±96 V, ±108 V and ±120 V.
The factory setting is ± 120V

Set up the output phase configuration

❶	Press POWER ON/OFF button to turn on the UPS and wait till the main screen is displayed on the front panel display.	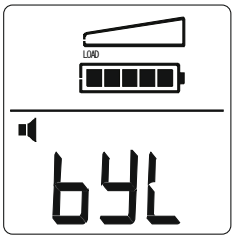	❷	Press ENTER button to go to the event log menu.	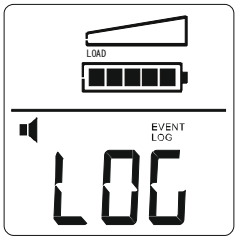
❸	Press the DOWN/ARROW button to go to the configuration menu.	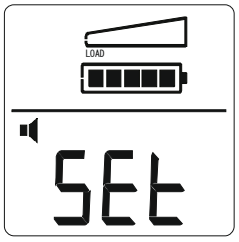	❹	Press the ENTER button to display the output voltage.	
❺	Press the UP ARROW button to go to the output line configuration menu.	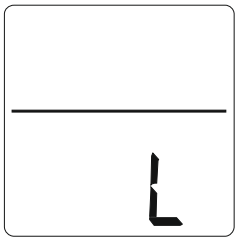	❻	Press the ENTER button to select the output phase configuration menu.	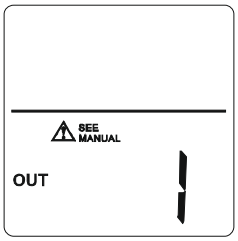

❼	Press ENTER button again. The number displayed will start flashing.	❽	Press UP/DOWN ARROW buttons to toggle through the displayed numbers and press ENTER button when the correct number is displayed (either “1” or “3”) to select the new setting. 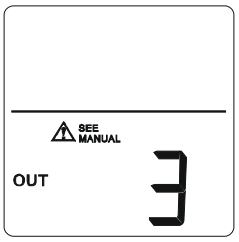 **NOTE:** The default output phase setting is “1”.
❾	Press the ESC button to quit the setting configuration.	❿	Press the ESC button again to return to the main screen. 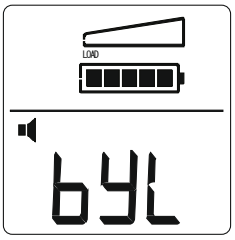

Hardwiring

⚠ CAUTION

RISK OF ELECTRIC SHOCK

- Adhere to all national and local electrical codes.
- All electrical work must be performed by a qualified electrician.
- Turn off all power to this equipment before working on the equipment.
- Switch the external circuit breaker off. Practice lockout/tagout procedures.
- Do not wear jewelry when working with electrical equipment.
- Select wire size and connectors according to national and local codes.
- Do not use this UPS for two (2) phase (Line to Line) input operation. The UPS needs a neutral connection to work properly. Operation without neutral connection may damage the unit or the connected load.

Failure to follow these instructions can result in moderate injury.

Backfeed protection

⚠ DANGER

RISK OF VOLTAGE BACKFEED

- In systems where Backfeed protection is not part of the standard design, an automatic isolation device (Backfeed protection option or other device meeting the requirements of IEC 62040-1 or IS 16242, (Part 1)) must be installed to prevent hazardous voltage or energy at the input terminals of the isolation device. The device must open within 15 seconds after the upstream power supply fails and must be rated according to the specifications.
- There is no standard Backfeed protection inside the UPS. Isolate UPS from AC supplies.
- Check for Hazardous Voltage between all terminals including the protective earth before working on the UPS.

Failure to follow these instruction will result in death or serious injury.

- Be sure to isolate the UPS before working on it.
- UPS does not have an inbuilt standard backfeed protection. During installation an additional external isolation device must be installed in UPS system.
- External backfeed protection device connections should be done as per the wiring diagram below.

Single phase input

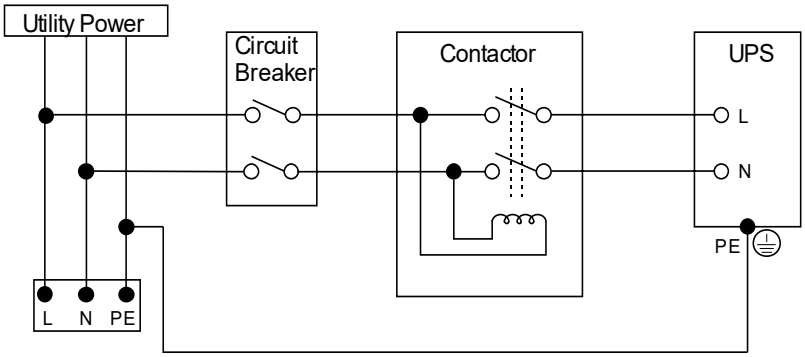

- Use external backfeed protection device as per the table below.

Single phase input	Rating	Coil voltage*	Contactor
	15 kVA	240 VAC	LC1D956M7
	20 kVA		
* The appropriate contactor should be sourced based upon the on-site voltage.			

- Use conductors for wiring as per the table below.

Rating	Wire function	Recommended wire size	Tightening torque
15 kVA	L, N, ⏚	AWG2 (25 mm^2)	12 N m (122.37 kgf cm)
20 kVA		AWG1 (35 mm^2)	

Three phase input

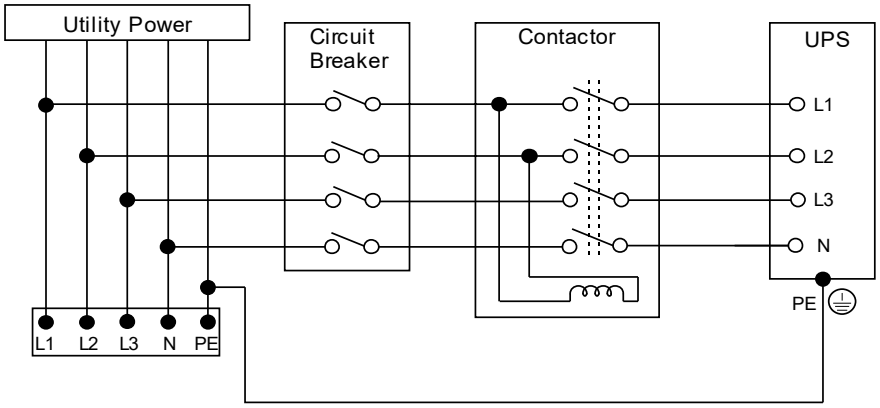

- Use external backfeed protection device as per the table below.

Three phase input	Coil voltage*	Rating	Contactor
	415 VAC	15 kVA	LC1D80004Q7
		20 kVA	
* The appropriate contactor should be sourced based upon the on-site voltage.			

- Use conductors for wiring as per the table below.

Wire function	Rating	Recommended wire size	Tightening torque
L1, L2, L3	15 kVA	AWG6 (10 mm^2)	12 N m (122.37 kgf cm)
	20 kVA	AWG6 (10 mm^2)	
N, ⏚	15 kVA	AWG2 (25 mm^2)	
	20 kVA	AWG1 (35 mm^2)	

Input/Output hardwiring

1. Locate the screws securing the terminal block cover on the rear panel of the UPS.
2. Remove the screws and remove the upper half of the terminal block cover.

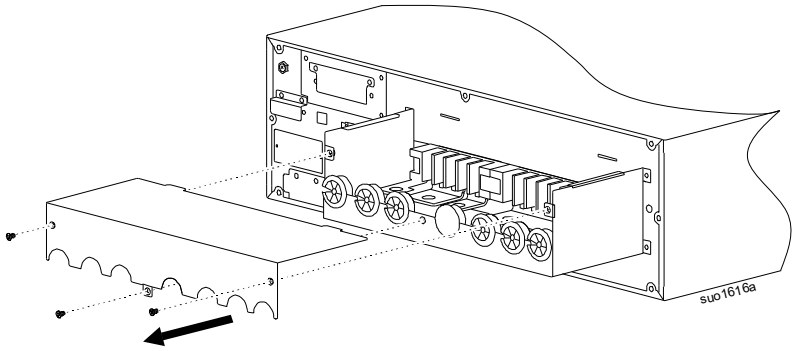

3. Connect the appropriate shorting jumpers for the required configuration. Refer to “Wiring configuration” on page 17 for details.
4. Replace the closed grommets with open grommets (supplied) where ever the wire enters the terminal block.
5. Route the wires through the grommet and connect the wires to the shorting jumpers and/or terminals as per the required configuration.
   NOTE: Connect the ground wire first before connecting any other wire.
6. Replace and secure the hardwire terminal block cover removed in step 2.

Wiring specifications

UPS Rating	Phases		Recommended wire size			
			Phase wire			Neutral and Ground wires
	Input	Output	Input	Output	Bypass	
15 kVA	1	1	AWG2 (25 mm^2)	AWG2 (25 mm^2)	Not applicable	AWG2 (25 mm^2)
	3	1	AWG6 (10 mm^2)	AWG2 (25 mm^2)	AWG2 (25 mm^2)	AWG2 (25 mm^2)
	3	3	AWG6 (10 mm^2)	AWG6 (10 mm^2)	Not applicable	AWG2 (25 mm^2)
20 kVA	1	1	AWG1 (35 mm^2)	AWG1 (35 mm^2)	Not applicable	AWG1 (35 mm^2)
	3	1	AWG6 (10 mm^2)	AWG1 (35 mm^2)	AWG1 (35 mm^2)	AWG1 (35 mm^2)
	3	3	AWG6 (10 mm^2)	AWG6 (10 mm^2)	Not applicable	AWG2 (25 mm^2)

Recommended lugs and tightening torque

Wire Size	Recommended Lug for connecting wires to shorting jumpers	Recommended Tightening Torque
AWG1	Use lug appropriate to wire size with diameter of hole Ø suitable for M6 screw. 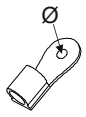	4.90 N m (50 kgf cm)
AWG2		
AWG4		
AWG6		

Hardwire terminal block

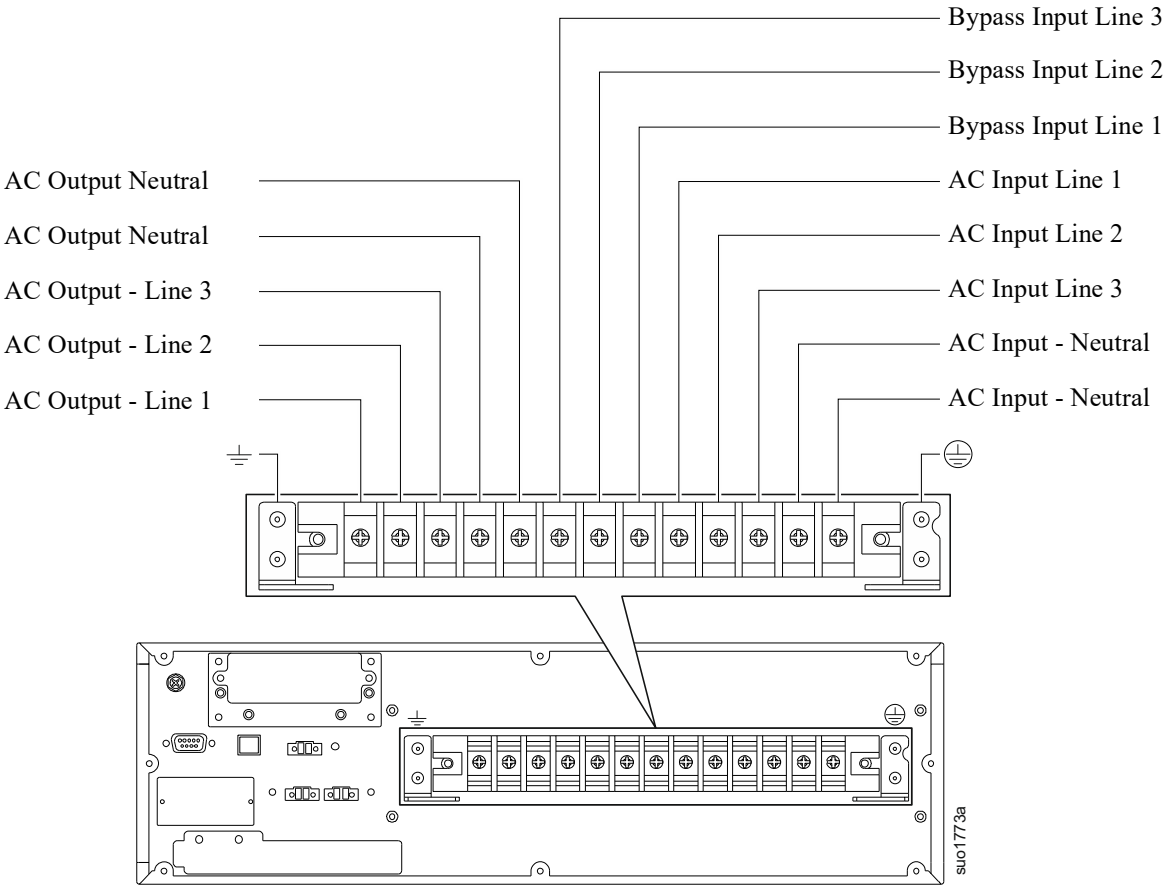

NOTE: This UPS has an option for

- Three phase input and single phase output (Default configuration)
- Three phase input and three phase output
- Single phase input and single phase output

Wiring configuration

Three phase input single phase output configuration (Default configuration)

NOTE: Replace the closed grommets with open grommets (supplied) and route the input and output wires through it.

1. Connect the protective earth wire to ⏚ terminal.
2. Connect the ground wire to ⏚ terminal.
3. Connect the Single phase AC output line wire to Output Line Shorting Jumper SJ1.
4. Connect the Single phase AC output neutral wire to Output Neutral Shorting Jumper SJ2.
5. Connect Three phase AC input to AC Input terminals L1, L2, L3.
   NOTE: Crimp the ring terminals (supplied) to the input wires L1, L2, L3 and connect the wires to the terminals.
6. Connect Input Neutral to Input Neutral Shorting Jumper SJ2.
7. Connect wire from L1 in the utility power source to Bypass Shorting jumper SJ1.

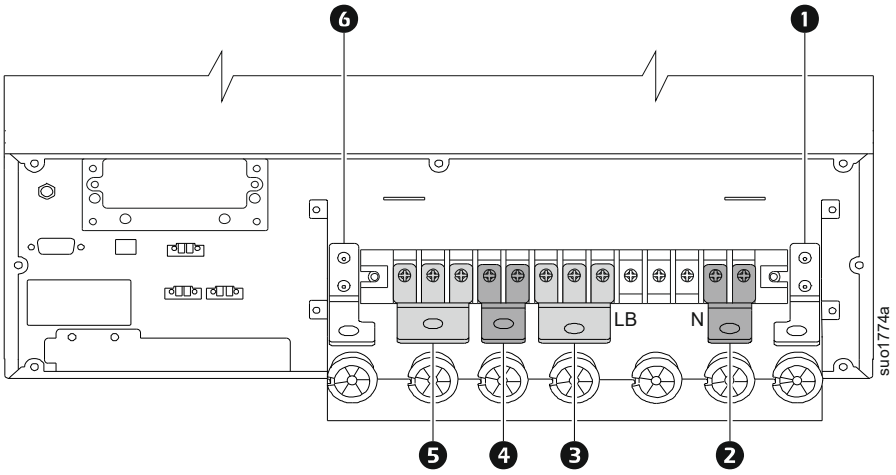

❶	⏚ Terminal
❷	Input Neutral Shorting Jumper SJ2
❸	Bypass Line Shorting Jumper SJ1
❹	Output Neutral Shorting Jumper SJ2
❺	Output Line Shorting Jumper SJ1
❻	⏚ Terminal

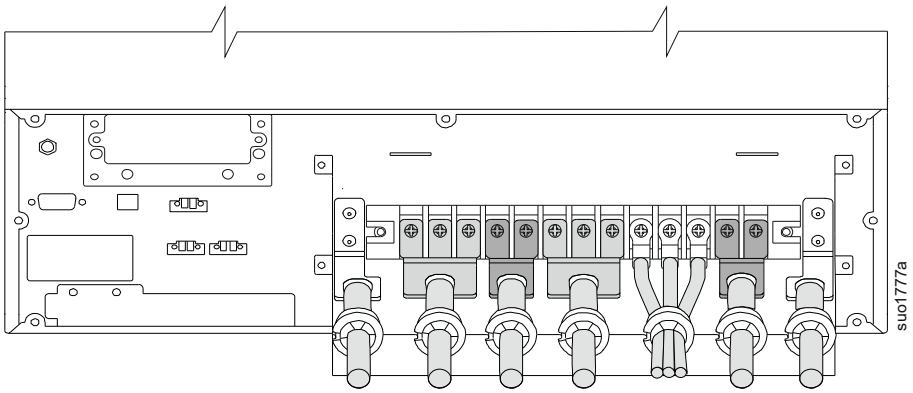

Three phase input three phase output configuration

NOTE: Replace the closed grommets with open grommets (supplied) and route the input and output wires through it.

1. Remove the output line shorting jumper SJ1 (factory installed).
2. Remove the bypass line shorting jumper SJ1 (factory installed).
3. Connect the protective earth wire to ⏚ terminal.
4. Connect the ground wire to ⏚ terminal.

   NOTE: Be sure that the output is set to three phase before installing the shorting jumpers. Refer "Set up the output phase configuration" section on page 12 for details.
5. Install shorting jumper SJ4 (supplied) between L1 terminal of Bypass AC input and L1 terminal of AC input.
6. Install shorting jumper SJ5 (supplied) between L2 terminal of Bypass AC input and L2 terminal of AC input.
7. Install shorting jumper SJ6 (supplied) between L3 terminal of Bypass AC input and L3 terminal of AC input.
8. Connect the Three phase AC output wires to Output AC terminals L1, L2, and L3.
   NOTE: Crimp the ring terminals (supplied) to the output wires and connect the wires to the terminals.
9. Connect the AC output neutral wire to Output Neutral Shorting Jumper SJ2
10. Connect Three phase AC input wires to AC Input terminals L1, L2, and L3.
    NOTE: Crimp the ring terminals (supplied) to the input wires and connect the wires to the terminals.
11. Connect Input Neutral to Input Neutral Shorting Jumper SJ2.

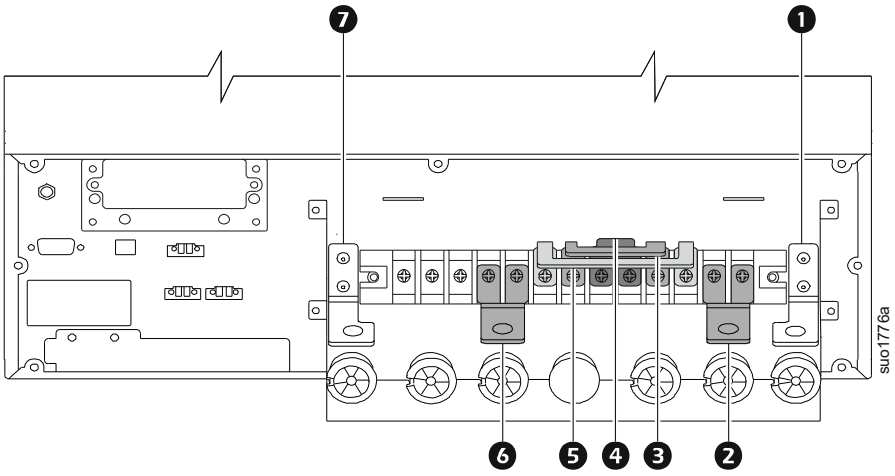

❶	⏚ Terminal
❷	Input Neutral Shorting Jumper SJ2
❸	Shorting jumper SJ5 between Bypass AC Input L2 and AC Input L2
❹	Shorting jumper SJ4 between Bypass AC Input L1 and AC Input L1
❺	Shorting jumper SJ6 between Bypass AC Input L3 and AC Input L3
❻	Output Neutral Shorting Jumper SJ2
❼	⏚ Terminal

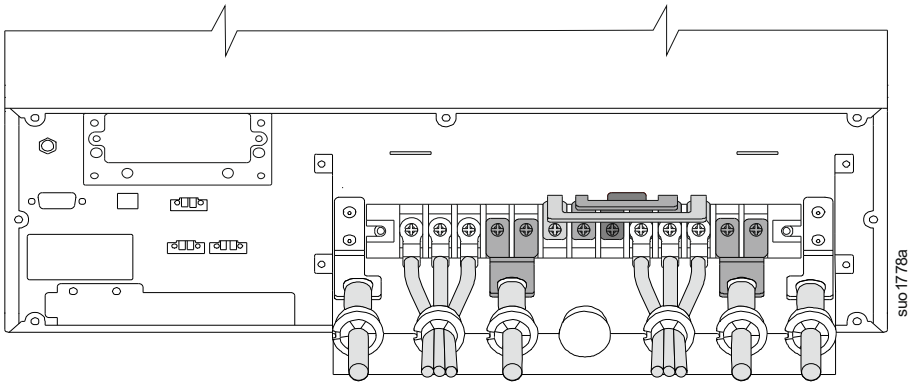

Single phase input single phase output configuration

NOTE: Replace the closed grommets with open grommets (supplied) and route the input and output wires through it.

1. Remove the bypass line shorting jumper SJ1 (factory installed).
2. Connect the protective earth wire to ⏚ terminal.
3. Connect the ground wire to ⏚ terminal.
4. Install shorting jumper SJ3 (supplied) between terminals L3, L2, L1 of Bypass AC input and terminals L3, L2, L1 of AC input as shown.
5. Connect the Single phase AC output line wire to Output Line Shorting Jumper SJ1.
6. Connect the Single phase AC output neutral wire to Output Neutral Shorting Jumper SJ2
7. Connect the Single phase AC input line wire to Input Line Shorting Jumper SJ3.
8. Connect the Single phase AC input neutral wire to Input Neutral Shorting jumper SJ2.

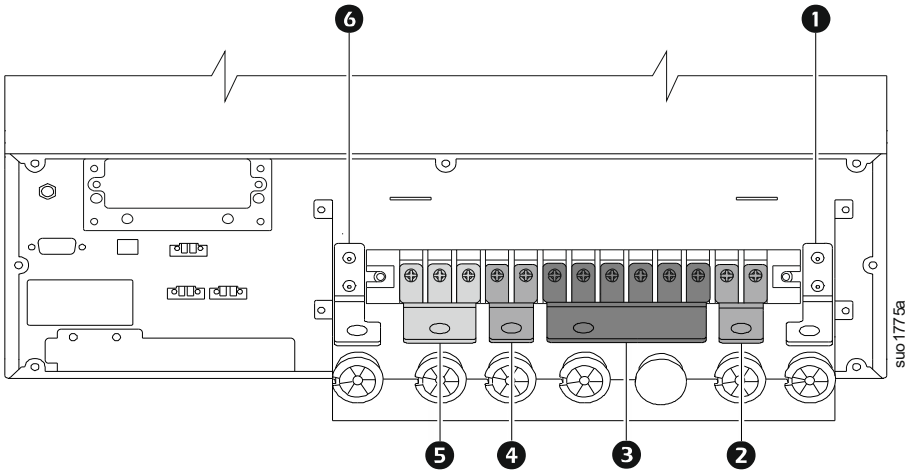

❶	⏚ Terminal
❷	Input Neutral Shorting Jumper SJ2
❸	Input Line Shorting Jumper SJ3
❹	Output Neutral Shorting Jumper SJ2
❺	Output Line Shorting Jumper SJ1
❻	⏚ Terminal

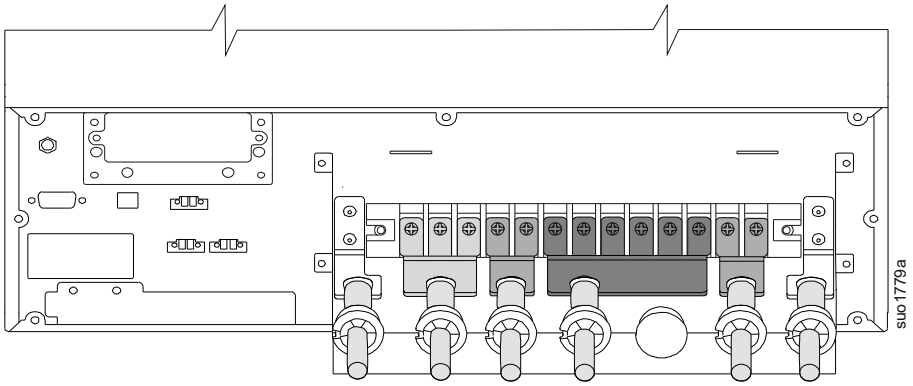

Start Up

⚠ CAUTION

RISK OF ELECTRIC SHOCK

- All electrical work must be performed by a qualified electrician.
- Turn off all power to this equipment before working on the equipment.
- Practice lockout/tagout procedures
- Do not wear jewelry when working with electrical equipment.

Failure to follow these instructions can result in moderate injury.

Connect equipment and input power to the UPS

1. Connect equipment to UPS. Refer “Input/Output hardwiring” on page 15 for details.
2. Connect input utility power to the UPS. Refer “Input/Output hardwiring” on page 15 for details.
3. Switch on the input utility power. The UPS display panel will illuminate.

Set up the battery charger current

Go to the display menu settings, select the correct battery charger current based on the Ah of the battery connected to the UPS. Refer “Charger current settings” on page 25 for details.

Start the UPS

Press and hold the POWER ON/OFF button located on the front panel of UPS until a beep is heard. The **Status** LED will illuminate green.

- Be sure to charge the battery to its full capacity initially.
- Do not expect full backup time during this initial charge period.

Cold start the UPS

Use cold start feature to supply power to connected equipment from the UPS batteries.

Press and hold the POWER ON/OFF button located on the front panel of UPS until a beep is heard. The display panel will illuminate.

Press the POWER ON/OFF button again to supply battery power to the connected equipment.

Turn off UPS output

To turn off the UPS output, press and hold the POWER ON/OFF button on the front display panel until a beep is heard.

Connect and install management software

UPS is provided with SchneiderUPS management software for unattended operating system shutdown, monitoring, control and energy reporting. The following diagram is a representation of a typical server installation.

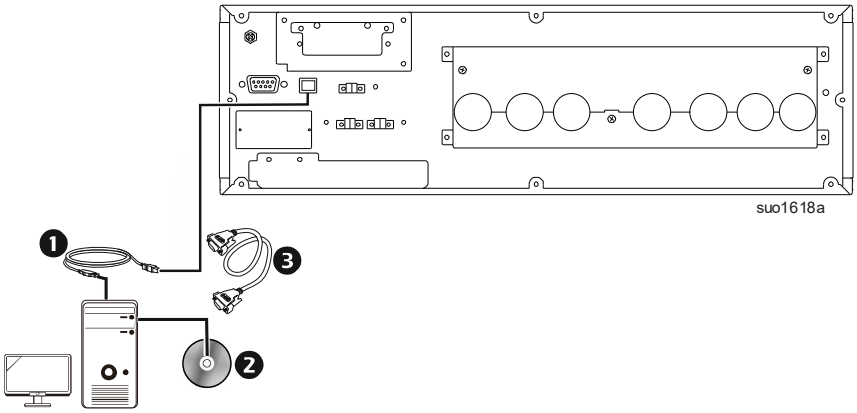

❶	Connect the USB cable from the rear of the UPS to the computer.
❷	Load the SchneiderUPS CD and follow the on-screen set-up instructions.
❸	A built-in serial port is also available for additional communication options with serial cable.

Additional communication options are available via the built-in intelligent slot. Refer to APC by Schneider Electric Web site, www.apc.com for more information.

Emergency Power Off

NOTICE

RISK OF EQUIPMENT DAMAGE

- Adhere to all national and local electrical codes.
- All electrical work must be performed by a qualified electrician.
- Do not connect the EPO interface to any circuit other than an unused circuit.

Failure to follow these instructions can result in equipment damage.

The Emergency Power Off (EPO) function is a feature that will immediately remove power to all connected equipment.

The EPO interface is a Safety Extra Low Voltage (SELV) circuit and should be connected only to other SELV circuits.

The EPO switch is internally powered by the UPS for use with non-powered switches or potential free normally closed (N/C) contacts.

Connecting normally closed (N/C) contacts

❶	Loosen the screws of terminals 1 and 2 in the EPO connector. 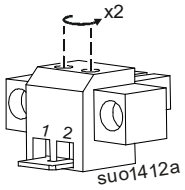	❷	Remove the metal link between pins 1 and 2. 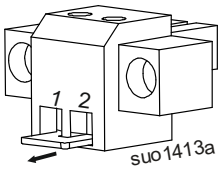
❸	Connect N/C contacts between pins 1 and 2 of the EPO terminal block. Use 0.5 to 1 mm^2 wire. 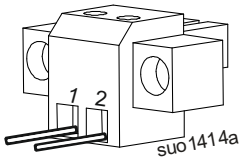	❹	Secure the EPO connector screws beneath pins 1 and 2. 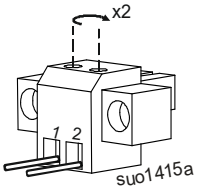

NOTE:

- If the N/C contact is open, the UPS output power will turn off.
- Use Class 2 cable (CL2) to connect the UPS to the EPO switch.

Operation

Front panel display features

UPS models are equipped with an intuitive and configurable LCD display. The display complements the software interface as they convey similar information and either may be used to configure the UPS settings.

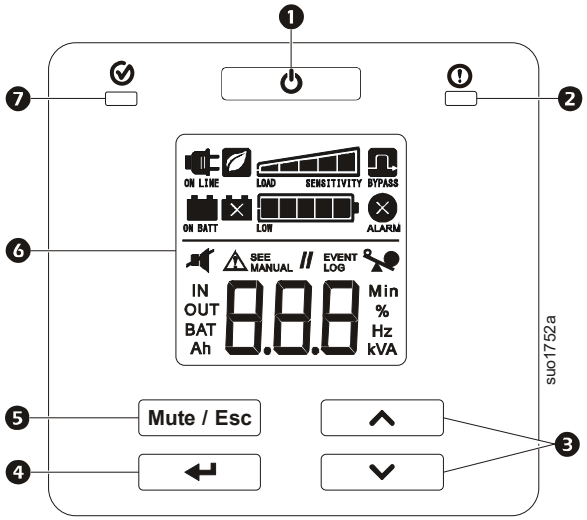

❶	POWER ON/OFF **button**	Press the POWER ON/OFF button to turn on the UPS. Press and hold the POWER ON/OFF button until a beep is heard to turn off the UPS. Press the POWER ON/OFF button to reset alerts.
❷	**Alert LED**	The **Alert** LED illuminates red when the UPS detects an internal error and blinks red for UPS notifications. Refer “Alerts and Notifications” on page 28 for details.
❸	UP/DOWN ARROW **button**	Press the UP/DOWN ARROW button to scroll through the main menu options and display screens.
❹	ENTER **button**	Press the ENTER button to enter the menu or to select a menu item/value during navigation.
❺	MUTE/ESC **button**	Press the MUTE/ESC button: • To acknowledge audible alerts and suppress them temporarily. • To exit a sub menu and return to the main menu.
❻	**LCD Display**	The display interface options are visible on this LCD screen. Press any button to activate LCD, if the display is not illuminated.
❼	**Status LED**	The **Status** LED illuminates green when the power is on. The LED indicates two different states of output power: • **Output off**: LED blinks on and off. Press POWER ON/OFF button to turn the output power on. • **Output on**: LED illuminates green continuously.

Display icons

	**On Line:** The UPS is drawing utility power and performing double conversion to supply power to the connected equipment.
	**On Battery:** The UPS is supplying battery backup power to the connected equipment.
	**Replace Battery:** The battery is not connected securely or the battery is nearing the end of its service life and should be replaced.

	**Bypass**: The UPS is in bypass mode, sending utility power directly to connected equipment. Bypass mode operation is the result of an internal UPS event, an overload condition, or an user initiated command either through the display interface or through an accessory. On battery operation is not available while the UPS is in bypass mode. Refer “Alerts and Notifications” on page 28 for details.
	**System Alerts:** The UPS has detected an internal error. Refer “Alerts and Notifications” on page 28 for more details.
	**Overload:** The equipment connected to the UPS is drawing more power than the rated power of the UPS.
	**Battery Charge:** The battery charge level is indicated by the number of bar sections illuminated. When all five blocks are illuminated, the battery is fully charged. Each bar represents approximately 20% of the battery charge capacity.
	**Load Level:** The load percentage is indicated by the number of load bar sections illuminated. Each bar represents approximately 20% of the load.
	**Mute:** An illuminated line through the icon indicates that the audible alert is disabled.
	**Green Mode**: An illuminated icon indicates that the unit is working in Green mode. The connected equipment is receiving the utility input directly as long as the input voltage and frequency are within the configured limits.
	**Alert or notification:** The UPS has detected an internal error or the UPS is in configuration mode. Refer “Alerts and Notifications” on page 28 for details.
	**Event:** The icon is illuminated when the user is viewing the event log.

Status indicators

Audible Alert	Condition
Continuous beeps, every half second	**Low Battery State** - The battery is nearing its discharge state. The UPS is about to shutdown.
	Overload condition - The equipment connected to the UPS is drawing more power than the rated power of the UPS.
4 beeps every 30 sec (first beep starts after 4 sec on battery)	**On Battery State** - The UPS is supplying battery backup power to the connected equipment.
Continuous beeps	**Alert State** - UPS has detected an internal error. Refer “Alerts and Notifications” on page 28 for details.
Short beep every 2.5 sec	Battery disconnected.
Continuous short beeps for every half second for 1 minute, repeats every 5 hours	Replace battery.
Two short beeps every 5 sec	**Event Bypass State** - UPS has detected an internal error. Connected equipment receives utility input power through the bypass relay.

UPS Display Parameters

Operational data displayed in the display panel is given in the table. Navigate using the UP/DOWN ARROW buttons.

Parameter	Units	Indicator Icons
Output voltage	VAC	OUT, V
Output frequency	Hz	OUT, Hz
Input voltage	VAC	IN, V
Input frequency	Hz	IN, Hz
State of battery charge	%	BAT, %
Battery voltage	VDC	BAT, V
Battery charging current	A DC	BAT, A
Ambient temperature	°C	NUMBER, C
Remaining On Battery runtime	Minutes	BAT, Min
Load level in percentage (Maximum of Watts or VA)	%	OUT, %
Load level in kVA	kVA	OUT, kVA
Total Ah capacity of connected battery	Ah	BAT, Ah

Configuration

Charger current settings

⚠ WARNING

RISK OF FIRE

Select the correct charger current for the batteries connected to the UPS.

Failure to follow these instructions could result in death or serious injury.

Select the correct battery charger current based on the Ah capacity of the battery connected to the UPS.

NOTE: It is recommended to use the battery having capacity of more than 26 Ah and less than 120 Ah.

Charging current	**3 A**	**6 A**	**9 A**	**13 A**
Battery capacity (Ah)	> 26 Ah and ≤ 42 Ah	> 42 Ah and ≤ 60 Ah	> 60 Ah and ≤ 100 Ah	>100 Ah

UPS settings

Configure UPS settings using the display interface. Refer “Configure UPS parameters” on page 28 to edit the parameters.

Function	Factory Default	User Selectable Options	Description
Output voltage	220 VAC	• 220 VAC • 230 VAC • 240 VAC	Allows the user to select output voltage while the UPS is in standby mode.
Audible alert	(Enable)	(Enable) (Disable)	Allows the user to mute the audible alerts of the UPS when set to disable or when the display panel buttons are pressed.
Green mode / high efficiency mode	(Disable)	(Enable) (Disable)	When this mode is enabled, connected equipment receives utility input power through the bypass relay as long as input voltage is within the range of ±5% of configured output voltage and the input frequency is within ±4 Hz of configured output frequency. Inverter is turned off during this mode. If utility power input goes out of range, inverter is turned on. The load is transferred to online mode or battery mode. The power to the connected equipment may be interrupted up to 10 milliseconds.
Battery Ah Capacity	26 Ah	26 to 200 Ah	Allows the user to set the Total Ah of the batteries connected to the UPS. **NOTE:** It is recommended to use the battery having capacity of more than 26 Ah and less than 120 Ah.
Charger current	3 A	• 3 A • 6 A • 9 A • 13 A	Allows the user to set up charging current of the charger.
Output voltage adjustment	220 VAC	• 220 ± 0~9 V • 230 ± 0~9 V • 240 ± 0~9 V	Allows the user to adjust the output voltage by using the UP/DOWN ARROW button. This parameter can be set either in line mode or battery mode.
Inverter voltage adjustment	Add 0	• Add 000 ~ 09.9 V • Sub 000 ~ 09.9 V	Allows the user to adjust the inverter voltage by choosing Add or Sub. The voltage range is from 0 V to 9.9 V. The default value is 0 V. This parameter can be set either in line mode or battery mode.

Advanced Display Navigation

The UPS display has five menu options in the main menu options. Press the enter button from the Home Screen to access these menu options. Use the UP/DOWN ARROW buttons to navigate between the menu options.

Menu option	Description
SEt	**Configure the UPS** Use this menu option to configure the UPS parameters. Press the ENTER button to see the configuration options. Refer "Configure UPS parameters" on page 28 for details. Press the MUTE/ESC button to return to the Home Screen.
LOG	**Show Event Log** Use this menu option to see the UPS event log. The UPS records the last 10 events and displays the codes in this log. Press the ENTER button to see the log. Use the UP/DOWN ARROW buttons to see the logged events. The DOWN ARROW button navigates towards old events and the UP ARROW button navigates to new events. Every log entry has a numeric and textual event code. At the end of the log, the word "End" will be displayed. Press the MUTE/ESC button to return to the Home Screen.
UPS	**Show UPS information** Use this menu option to see the UPS information. Press the ENTER button to see the rating of the UPS. Press the UP ARROW button to see the UPS firmware version. Press the MUTE/ESC button to return to the Home Screen.
byP	**User Command to bypass** Use this menu option to switch the UPS to bypass mode or bring the UPS to online mode from bypass mode. Press ENTER button: PUt **Put:** Use to switch the UPS to bypass mode of operation. **NOTE:** Power to the connected equipment will drop, if the mains voltage is not within the threshold limits. OUt **Out:** Bring the UPS out of bypass and restore clean power to the connected equipment. The UPS will start a count down on the display while switching to Bypass mode or coming out of Bypass mode.
tSt	**Execute Battery Self Test** Use this menu option to conduct a self test and determine the battery status. Press the ENTER button to initiate the test. If the test command is accepted, the UPS will initiate a self test and will start a count down on the display. Display messages are shown at the end of the test. rFd Test refused. The output is off or battery is not charged or battery is disconnected. FLd Test not passed. PAS Test passed. Press the MUTE/ESC button to return to the Home Screen.

Configure UPS parameters

Follow the steps to configure parameters in the UPS:

1. Press the ENTER button.
2. Press the UP/DOWN ARROW buttons to navigate to “Set”.
3. Press the ENTER button.
4. Navigate through the parameters using the UP/DOWN ARROW buttons.
5. Press the ENTER button to edit a parameter. Icons start flashing to indicate the editing.
6. Press the UP/DOWN ARROW buttons to navigate between the options available for the selected parameter.
7. Press the ENTER button to select the option or MUTE/ESC button to abort the editing of current parameter. Flashing of icons stops after this.
8. Press the UP/DOWN ARROW buttons to navigate between parameters.
9. Press the MUTE/ESC button to exit menu navigation.

Alerts and Notifications

UPS displays a text code and a numeric code on the display when it detects an internal error.

Alerts

Display code	Description	Solution
	UPS has experienced a short circuit at the output. Unit will try to auto-recover from this condition.	1. Turn off input circuit breaker. 2. Wait for 3 minutes. 3. Remove the short circuit. 4. Turn on input circuit breaker. 5. Press POWER ON/OFF button to turn on the UPS output.
	UPS is experiencing an overload condition.	Disconnect nonessential equipment from the UPS to eliminate the overload condition.
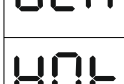	The UPS has detected a DC voltage error.	Press POWER ON/OFF button to reset the DC voltage error. If the UPS does not recover, contact APC by Schneider Electric customer support.
	Temperature of the unit is rising above the set limits.	Disconnect nonessential equipment from the UPS to reduce the load. Ensure that ambient temperature is within limits. Ensure that adequate clearance is maintained.
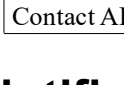	UPS has detected a charger error.	1. Turn off input circuit breaker. 2. Wait for 3 minutes. 3. Turn on input circuit breaker. 4. Press POWER ON/OFF button to turn on the UPS output.
Contact APC by Schneider Electric customer support for all other alert codes.		

Notifications

Display code	Description	Solution
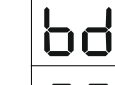	Battery is not connected.	Connect battery to the UPS. Refer “Start Up” on page 20 for details.
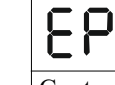	EPO enabled.	Set the circuit in closed position to disable EPO function.
Contact APC by Schneider Electric customer support for other notifications.		

Transport

1. Shut down and disconnect all connected equipment.
2. Disconnect the unit from mains power.
3. Disconnect external batteries.
4. Follow the shipping instructions outlined in the Service section of this manual.

Service

If the unit requires service, do not return it to the dealer. Follow these steps:

1. Review the *Troubleshooting* section of the manual to eliminate common problems.
2. If the problem persists, contact APC by Schneider Electric Customer Support.
    a. Note the model number and serial number and the date of purchase. The model and serial numbers are located on a label in the rear panel of the unit.
    b. Call APC by Schneider Electric Customer Support and a technician will attempt to solve the problem over the phone. If this is not possible, the technician will issue a Service Request Number.
    c. If the unit is under warranty, the repairs are free.

An Authorized Service Representative will visit your location and try to resolve the issue.

Troubleshooting

Use the table below to solve minor installation and operation problems. Refer to the APC by Schneider Electric Web site, www.apc.com for assistance with complex UPS problems.

Problem and/or Possible Cause	Solution
UPS will not turn on when utility input is available	
The UPS is not turned on.	Press the POWER button to turn on the output of the UPS.
The UPS is not connected to utility power supply.	Be sure that the power cable from the UPS to the utility power supply is securely connected at both ends.
Building circuit breaker is tripped.	Reset the building circuit breaker.
The UPS is operating on battery, while connected to the input utility power	
Input voltage and frequency are beyond specifications.	Connect the UPS to an outlet on a different circuit. Test the utility input power to be sure the unit is receiving input power. If display is on, navigate and check the input voltage and frequency.
UPS, when connected to battery, is not supplying power to the connected equipment	
The UPS is not turned on.	If the UPS has shutdown (the display is not on), follow the "Cold start the UPS" on page 20 procedure.
The battery is not connected.	Connect battery to the UPS. Refer "Start Up" on page 20 for details.
Low battery cut off. UPS may have discharged the battery due to utility power outage and turned the output off due to low battery condition.	Wait for the utility power to be restored and charge the battery.
UPS emits an audible beeping sound at long intervals	
The UPS is operating normally when running on battery.	Refer "Alerts and Notifications" on page 28 for details.
Alert LED is illuminated. The UPS displays an alert message and emits a constant beeping sound	
The UPS has detected an internal error.	Refer "Alerts and Notifications" on page 28 for details.
No audible sounds from UPS even when the Alert LED is illuminated	
Audible alert is disabled.	Change the UPS configuration to enable audible alerts.
UPS is not providing expected backup time	
Battery is not charged properly.	Be sure that the battery is charged to its full capacity.
The battery is near the end of its service life.	If the battery is near the end of its service life, consider replacing the battery, even if the replace battery indicator is not illuminated.
Charger taking more time to charge battery.	• Be sure that the correct charger current is set. Refer to "Set up the battery charger current" on page 20 for details. • Input voltage is low to charge the battery with full current.
UPS is not turning off	
Utility input power is available.	UPS logic power cannot be turned off if utility input power is available. To turn off the UPS, turn off utility input power and press POWER OFF button. Release when a beep is heard.
UPS is in Bypass mode and the LED is not illuminated red	
UPS is configured to stay in the bypass mode.	Change the configuration to exit bypass mode.
UPS is in Bypass mode and the LED is illuminated red	
UPS is in bypass mode even after over temperature alarm is cleared.	Wait for some time for the UPS to come back to online mode.
The UPS has experienced an overload condition and transferred to bypass.	Connected equipment exceeds the maximum load as defined in specifications. The alerts remain on until the overload condition is corrected. Disconnect nonessential equipment from the UPS to eliminate the overload condition. The UPS continues to supply power as long as it is in bypass mode and the circuit breaker does not trip. The UPS will not provide battery power in the event of a utility voltage interruption.
UPS detected an internal error and transferred to bypass.	Refer "Alerts and Notifications" section on page 28 for details.

Limited Factory Warranty

Schneider Electric IT Corporation (SEIT), warrants its products to be free from defects in materials and workmanship for a period of two (2) years from the date of purchase. The SEIT obligation under this warranty is limited to repairing or replacing, at its own sole option, any such defective products. Repair or replacement of a defective product or parts thereof does not extend the original warranty period.

This warranty applies only to the original purchaser who must have properly registered the product within 10 days of purchase. Products may be registered online at warranty.apc.com.

SEIT shall not be liable under the warranty if its testing and examination disclose that the alleged defect in the product does not exist or was caused by end user's or any third person's misuse, negligence, improper installation, testing, operation or use of the product contrary to SEIT's recommendations or specifications. Further, SEIT shall not be liable for defects resulting from: 1) unauthorized attempts to repair or modify the product, 2) incorrect or inadequate electrical voltage or connection, 3) inappropriate on site operation conditions, 4) Acts of God, 5) exposure to the elements, or 6) theft. In no event shall SEIT have any liability under this warranty for any product where the serial number has been altered, defaced, or removed.

EXCEPT AS SET FORTH ABOVE, THERE ARE NO WARRANTIES, EXPRESS OR IMPLIED, BY OPERATION OF LAW OR OTHERWISE, APPLICABLE TO PRODUCTS SOLD, SERVICED OR FURNISHED UNDER THIS AGREEMENT OR IN CONNECTION HEREWITH.

SEIT DISCLAIMS ALL IMPLIED WARRANTIES OF MERCHANTABILITY, SATISFACTION AND FITNESS FOR A PARTICULAR PURPOSE.

SEIT EXPRESS WARRANTIES WILL NOT BE ENLARGED, DIMINISHED, OR AFFECTED BY AND NO OBLIGATION OR LIABILITY WILL ARISE OUT OF, SEIT'S RENDERING OF TECHNICAL OR OTHER ADVICE OR SERVICE IN CONNECTION WITH THE PRODUCTS.

THE FOREGOING WARRANTIES AND REMEDIES ARE EXCLUSIVE AND IN LIEU OF ALL OTHER WARRANTIES AND REMEDIES. THE WARRANTIES SET FORTH ABOVE CONSTITUTE SEIT'S SOLE LIABILITY AND PURCHASER'S EXCLUSIVE REMEDY FOR ANY BREACH OF SUCH WARRANTIES. SEIT WARRANTIES EXTEND ONLY TO ORIGINAL PURCHASER AND ARE NOT EXTENDED TO ANY THIRD PARTIES.

IN NO EVENT SHALL SEIT, ITS OFFICERS, DIRECTORS, AFFILIATES OR EMPLOYEES BE LIABLE FOR ANY FORM OF INDIRECT, SPECIAL, CONSEQUENTIAL OR PUNITIVE DAMAGES, ARISING OUT OF THE USE, SERVICE OR INSTALLATION OF THE PRODUCTS, WHETHER SUCH DAMAGES ARISE IN CONTRACT OR TORT, IRRESPECTIVE OF FAULT, NEGLIGENCE OR STRICT LIABILITY OR WHETHER SEIT HAS BEEN ADVISED IN ADVANCE OF THE POSSIBILITY OF SUCH DAMAGES. SPECIFICALLY, SEIT IS NOT LIABLE FOR ANY COSTS, SUCH AS LOST PROFITS OR REVENUE, WHETHER DIRECT OR INDIRECT, LOSS OF EQUIPMENT, LOSS OF USE OF EQUIPMENT, LOSS OF SOFTWARE, LOSS OF DATA, COSTS OF SUBSTITUANTS, CLAIMS BY THIRD PARTIES, OR OTHERWISE.

NOTHING IN THIS LIMITED WARRANTY SHALL SEEK TO EXCLUDE OR LIMIT SEIT'S LIABILITY FOR DEATH OR PERSONAL INJURY RESULTING FROM ITS NEGLIGENCE OR ITS FRAUDULENT MISREPRESENTATION OF TO THE EXTENT THAT IT CANNOT BE EXCLUDED OR LIMITED BY APPLICABLE LAW.

To obtain service under warranty you must obtain a Returned Material Authorization (RMA) number from customer support. Customers with warranty claims issues may access the SEIT worldwide customer support network through the SEIT Web site: www.apc.com. Select your country from the country selection drop down menu. Open the Support tab at the top of the web page to obtain information for customer support in your region. Products must be returned with transportation charges prepaid and must be accompanied by a brief description of the problem encountered and proof of date and place of purchase.

APC by Schneider Electric Customer Support

Internet	http://www.apc.com/in
Toll Free	18001030011/18004194272
E-mail	indiainfo@se.com

© 2021 APC by Schneider Electric. APC, the APC logo are owned by Schneider Electric Industries S.A.S., or their affiliated companies. All other trademarks are property of their respective owners.

EN 990-91467A
07/2021