AKR 808 IX

12NC: 857880801000

GTIN (EAN) code: 8003437980473

SENSING THE DIFFERENCE



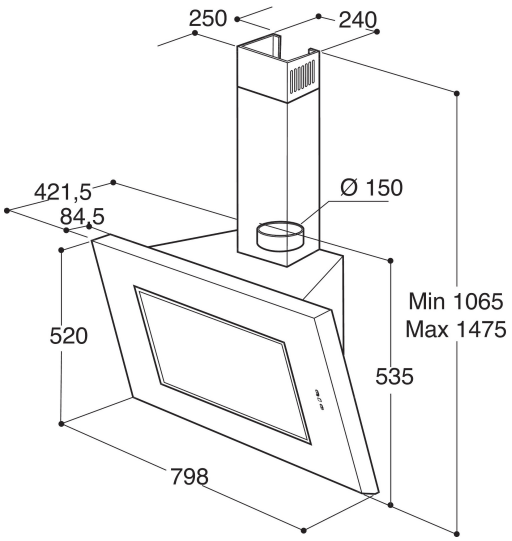

- Maximum noise level 67 dBA
- Noise Level (min. - max.): 45-68 dBA
- Air Flow (min. - max.): 256, 647 m3/h
- Maximum extraction rate: 647 (m3/h)
- Extraction / Recirculation Rate 650 / 553 m3/h
- 3 speed settings
- Odour Filter
- 2 Halogen, 40 W lamps
- 1 x 250 W motor
- Electronic Backlit soft buttons
- 1 Washable aluminium filter
- Backlit soft buttons
- Grease Filtering Efficiency Class: D
- Lighting Efficiency Class: F
- Fluid Dynamic Efficiency Class: D
- Operating Mode: Air extraction, Recirculating air
- Inox Finishing

Whirlpool wall mounted cooker hood - AKR 808 IX

This Whirlpool wall mounted Cooker Hood features: dishwasher-safe, washable aluminium grease filters. An outstanding cooker extractor fan, ensuring a fresh, grease-free cooking environment. Between 60cm and 90cm wide appliance. New design ensuring extra silent performance.

Electronic control
Effortless control. This Whirlpool Hood includes an intuitive electronic user interface, designed to provide you with the simplest, most satisfying user experience ever.

Carbon Filter Included
Enjoy fresh air in your kitchen, always. This Whirlpool Hood includes a carbon purifying air filter, that effectively protects your kitchen from odours and grease.

Flexible Installation
Flexible installation options. This Whirlpool Hood can be operated in either Ducted or Recirculated mode (filter needed), so you can enjoy complete freedom when designing your kitchen.

3 Speeds
Versatile performance. This Whirlpool Hood offers 3 speed options, giving you complete control over the extraction rate.

Attractive Design
Visitors and your family alike will love the attractive design of this hood, which you can match with other Whirlpool Built-In kitchen appliances.

Total annual energy consumption
Ideal performance, outstanding savings. Whirlpool Hoods are designed to provide exceptional results, while reducing energy costs.

Light Soft touch button
Light Soft Touch button. Your hood's options are only a fingertip away, thanks to the Light Soft touch button.

Halogen Lamps
Halogen lamps generate 3 times more light than normal lamps, so you can always see what's cooking.

Wall-mounted installation
Wall-mounted installation. This wall-mounted Whirlpool Hood is a breeze to install.

2 lights
Perfect lighting. This Whirlpool Hood features two integrated lights, providing ideal illumination, so you'll always be able to see what's cooking.

AKR 808 IX

12NC: 857880801000

GTIN (EAN) code: 8003437980473

Whirlpool
SENSING THE DIFFERENCE

MAIN FEATURES

Product group	Hood
Colour body	Inox
Material body	Stainless steel
Colour chimney	-
Material chimney	N/A
Typology	Wall-mounted
Installation type	Wall-mounted
Type of control	Electronic
Type of control settings	-
Decor panel options	N/A
Motor location	Integrated motor in hood body
Operating Mode	Convertible
Electrical connection rating (W)	290
Current (A)	1,2
Voltage (V)	220-240
Frequency (Hz)	50/60
Length of Electrical Supply Cord (cm)	150
Plug type	Schuko
Chimney height (mm)	0-0
Height of product, without chimney (mm)	520
Height of the product	568
Width of the product	798
Depth of the product	420
Minimum niche height	0
Minimum niche width	0
Niche depth	0
Net weight (kg)	14.1

TECHNICAL FEATURES

Type of manual control devices	Backlit soft buttons
Type of automatic control devices	-
Number of motors	1
Total power of the motors (W)	250
Number of speed settings: boost option availability	3
Boost presence	No
Maximum output air extraction (m³/h)	736
Boost position air extraction (m³/h)	0
Maximum output recirculating air (m³/h)	553
Boost position output recirculating (m³/h)	0
Light Control Type	On/Off
Number of lights	2
Type of lamps used	Halogen
Total power of the lamps (W)	40
Diameter of air outlet (mm)	150
No-return airflow flap	No
Grease filter material	Washable aluminium
Odour filter	Yes

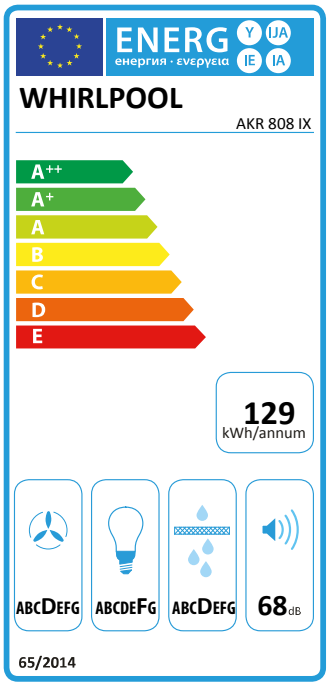

PERFORMANCES

Sound power at min. speed (2010/30/EU)	45
Sound power at max. speed (2010/30/EU)	68
Noise level with boost position (dB(A) re 1 pW)	0