Dishwasher

User manual

DW60B*8***** / DW60B*7***** Series



FULL_DW60BB890UAPET_DD68-00254C-00_EN.indd 1 2023-03-09 6:27:30

Preparation

Connecting SmartThings (Wi-Fi model only)

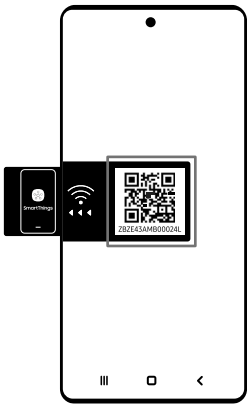

1. Launch a QR code reader app and scan the QR code image on the product.
2. Try connecting the SmartThings app to the product.

Registering the product / Reading the manual / Connecting to Services

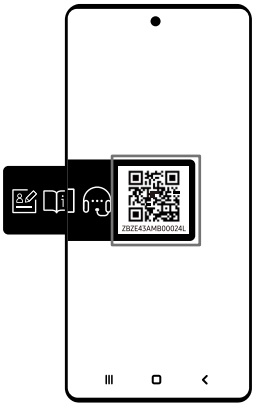

Launch a QR code reader app and scan the QR code image on the product.

NOTE

- We provide online manuals that can be accessed through your phone or our website to contribute in reducing the usage of manuals in paper format, as part of efforts to save the Earth.

FULL_DW60BB890UAPET_DD68-00254C-00_EN.indd 2 2023-03-09 6:27:30

Contents

Safety information 5

What you need to know about safety instructions 5
Important safety symbols 5
Instructions about the WEEE 6
Important safety precautions 7
Instructions when using your dishwasher 9
Instructions for protecting your children 10
Instructions for installing your dishwasher 10

Installation 13

What's included 13
Installation requirements 17
Built-in installation under the sink (For Free Standing model) 19
Step-by-step installation 20
Cut-out dimension 21
Skirting board 30
SmartThings (Applicable models only) 32
Open Source Announcement 35

Before you start 36

Dishwasher at a glance 36
Unsuitable items for the dishwasher 37
Basic use of racks 38
Detergent compartment 42
Rinse aid reservoir 44
Salt storage 45
Settings 46
Settings (Except DW60BB89* models) 49

Operations 52

Control panel (For DW60BB89* models) 52
Control panel (Except DW60BB89* models) 53
Cycle overview 54
Simple steps to start 56

Maintenance 57

Cleaning 57
Cleaning the drain pump 61
Long-term care 61

FULL_DW60BB890UAPET_DD68-00254C-00_EN.indd 3 2023-03-09 6:27:30

Contents

Troubleshooting 62

Checkpoints 62
Information codes 65

Cycle chart 66

Appendix 70

Transportation/relocation 70
Protection against frost 70
Disposing the dishwasher and helping the environment 70
Energy, water saving tip 71
EPREL information 71
Specifications 72

For standard test 73

FULL_DW60BB890UAPET_DD68-00254C-00_EN.indd 4 2023-03-09 6:27:30

Safety information

Congratulations on your new Samsung dishwasher. This manual contains important information on the installation, use and care of your appliance. Please take time to read this manual to take full advantage of your dishwasher's many benefits and features.

What you need to know about safety instructions

Please read this manual thoroughly to ensure that you know how to safely and efficiently operate the extensive features and functions of your new appliance and retain it at a safe place near the appliance for your future reference. Use this appliance only for its intended purpose as described in this user manual.

Warning and important safety instructions in this manual do not cover all possible conditions and situations that may occur. It is your responsibility to use common sense, caution, and care when installing, maintaining, and operating your dishwasher.

Because the following operating instructions cover various models, the characteristics of your dishwasher may differ slightly from those described in this manual and not all warning signs may be applicable. If you have any questions or concerns, contact your nearest service center or find help and information online at www.samsung.com.

Important safety symbols

What the icons and signs in this user manual mean:

⚠ WARNING

Hazards or unsafe practices that may result in **severe personal injury, death or property damage.**

⚠ CAUTION

Hazards or unsafe practices that may result in **personal injury or property damage.**

NOTE

Indicates that a risk of personal injury or material damage exists.

These warning symbols are here to prevent injury to you and others. Please follow them explicitly.

Keep these instructions in a safe place and ensure that new users are familiar with the content. Pass them on to any future owner.

FULL_DW60BB890UAPET_DD68-00254C-00_EN.indd 5 2023-03-09 6:27:30

Safety information

Instructions about the WEEE



Correct Disposal of This Product (Waste Electrical & Electronic Equipment)

(Applicable in countries with separate collection systems)

This marking on the product, accessories or literature indicates that the product and its electronic accessories (for example charger, headset, USB cable) should not be disposed of with other household waste at the end of their working life. To prevent possible harm to the environment or human health from uncontrolled waste disposal, please separate these items from other types of waste and recycle them responsibly to promote the sustainable reuse of material resources.

Household users should contact either the retailer where they purchased this product, or their local government office, for details of where and how they can take these items for environmentally safe recycling.

Business users should contact their supplier and check the terms and conditions of the purchase contract. This product and its electronic accessories should not be mixed with other commercial wastes for disposal.

For information on Samsung's environmental commitments and product specific regulatory obligations for example REACH, WEEE, Batteries, visit our sustainability page available through Samsung.com

FULL_DW60BB890UAPET_DD68-00254C-00_EN.indd 6 2023-03-09 6:27:30

Important safety precautions

To reduce the risk of fire, electric shock, or injury to persons when using your appliance, follow basic precautions, including the following:

1. This appliance is not to be used by persons (including children) with reduced physical, sensory or mental capabilities, or lack of experience and knowledge, unless they have been given supervision or instruction concerning use of the appliance by a person responsible for their safety.
2. This appliance can be used by children aged from 8 years and above and persons with reduced physical, sensory or mental capabilities or lack of experience and knowledge if they have been given supervision or instruction concerning use of the appliance in a safe way and understand the hazards involved. Children shall not play with the appliance. Cleaning and user maintenance shall not be made by children without supervision.
3. Children should be supervised to ensure that they do not play with the appliance.
4. If the supply cord is damaged, it must be replaced by the manufacturer, its service agent or similarly qualified persons in order to avoid a hazard.
5. The new hose-sets supplied with the appliance are to be used on installation and old hose-sets should not be reused.

FULL_DW60BB890UAPET_DD68-00254C-00_EN.indd 7 2023-03-09 6:27:30

Safety information

6. For appliances with ventilation openings in the base, a carpet must not obstruct the openings.
7. Children of less than 3 years should be kept away from appliance unless continuously supervised.
8. **CAUTION**: In order to avoid a hazard cuased by inadvertent resetting of the thermal cut-out, this appliance must not be supplied through an external switching device, such as a timer, or connected to a circuit that is regularly switched on and off by the utility.
9. **WARNING**: Knives and other utensils with sharp points must be loaded in the basket with their points down or placed in a horizontal position.

This appliance is solely intended to be used in household and similar applications such as:

- Staff kitchen areas in shops, offices and other working environments;
- Farm houses;
- Clients in hotels, motels and other residential type environments;
- Bed and breakfast type environments.

FULL_DW60BB890UAPET_DD68-00254C-00_EN.indd 8 2023-03-09 6:27:30

Instructions when using your dishwasher

This dishwasher is not designed for commercial use. It is intended for use in domestic households and in similar working and residential environments such as:

- Shops
- Offices and showrooms

and by residents in establishments such as:

- Hostels and guest houses.

It must only be used as an appliance as specified in this user manual, for cleaning domestic crockery and cutlery. Any other usage is not supported by the manufacturer and could be dangerous.

The manufacturer cannot be held liable for damage resulting from incorrect or improper use or operation.

Do not use solvents in the dishwasher. Danger of explosion.

Do not inhale or ingest dishwasher detergent. Dishwasher detergents contain irritant or corrosive ingredients which can cause burning in the nose, mouth and throat if swallowed, or inhibit breathing. Consult a doctor immediately if detergent has been swallowed or inhaled.

Avoid leaving the door open unnecessarily, as you could trip over it.

Do not sit or lean on the opened door. This could cause the dishwasher to tip and get damaged, and you could get injured.

Only use detergent and rinse aid formulated for domestic dishwashers. Do not use washing-up liquid.

Do not use any strong acid cleaning agent.

Do not fill the rinse aid reservoir with powder or liquid detergent. This will cause serious damage to the reservoir.

Inadvertently filling the salt reservoir with powder or liquid dishwasher detergent will damage the water softener. Make sure to use the correct packet of dishwasher salt when filling the salt reservoir.

Please only use special coarse grained dishwasher salt for reactivation, as other salts may contain insoluble additives which can impair the functioning of the softener.

In an appliance with a cutlery basket (depending on model), cutlery is cleaned and dried better if placed efficiently the basket with the handles downwards. However, to avoid the risk of injury, place knives and forks etc. with the handles upwards.

Plastic items which cannot withstand being washed in hot water, such as disposable plastic containers, or plastic cutlery and crockery should not be cleaned in the dishwasher. The high temperatures in the dishwasher may cause them to melt or lose shape.

On models with **Delay Start** function, make sure that the dispenser is dry before adding detergent. Wipe dry if necessary. Detergent will clog if poured into a damp dispenser and may not be thoroughly dispersed.

FULL_DW60BB890UAPET_DD68-00254C-00_EN.indd 9 2023-03-09 6:27:30

Safety information

Knives and other utensils with sharp points must be loaded in the basket with their points down or placed in a horizontal position.

Instructions for protecting your children

This appliance is not a toy! To avoid the risk of injury, keep children well away and do not allow them to play in or around the dishwasher or to use the controls. They will not understand the potential dangers posed by it. They should be supervised whenever you are working in the kitchen. There is also a danger that children playing might shut themselves in the dishwasher.

This appliance can be used by children aged from 8 years and above and persons with reduced physical, sensory or mental capabilities or lack of experience and knowledge if they have been given supervision or instruction concerning use of the appliance in a safe way and understand the hazards involved. Children shall not play with the appliance. Cleaning and user maintenance shall not be made by children without supervision.

Older children may only use the dishwasher when its operation has been clearly explained to them and they are able to use it safely, recognising the dangers of misuse.

KEEP CHILDREN AWAY FROM DETERGENTS!

Dishwasher detergents contain irritant and corrosive ingredients which can cause burning in the mouth, nose and throat if swallowed, or inhibit breathing.

Keep children away from the dishwasher when the door is open. There could still be detergent residues in the cabinet.

Consult a doctor immediately if your child has swallowed or inhaled detergent.

Instructions for installing your dishwasher

Before setting up the appliance, check it for any externally visible damage. Under no circumstances should you use a damaged appliance. A damaged appliance could be dangerous.

The dishwasher must only be plugged into the electricity supply through a suitable switched socket. The electrical socket must be easily accessible after the dishwasher is installed so that it can be disconnected from the electricity supply at any time. (Refer to the "Dishwasher at a glance" section on page 36.)

There must be no electrical sockets behind the dishwasher. Danger of overheating and fire risk if the dishwasher were to be pushed up against a plug.

The dishwasher must not be installed under a hob. The high radiant temperatures which are sometimes generated by a hob could damage the dishwasher. For the same reason it should not be installed next to open fires or other appliances which give off heat, such as heaters etc.

Do not connect the dishwasher to the mains supply until it has been fully installed and any adjustment has been made to the door springs.

FULL_DW60BB890UAPET_DD68-00254C-00_EN.indd 10 2023-03-09 6:27:30

Before connecting the appliance, check that the connection data on the data plate (voltage and connected load) match the mains electricity supply. If in any doubt, consult a qualified electrician.

The electrical safety of this appliance can only be guaranteed when continuity is complete between it and an effective grounding system. It is most important that this basic safety requirement is present and regularly tested and where there is any doubt the electrical system in the house should be checked by a qualified electrician.

The manufacturer cannot be held liable for the consequences of an inadequate grounding system (for example electric shock).

Do not connect the appliance to the mains electricity supply by a multi-socket unit or an extension lead. These do not guarantee the required safety of the appliance (for example danger of overheating).

This appliance may only be installed in mobile installations such as ships if a risk assessment of the installation has been carried out by a suitably qualified engineer.

The plastic housing of the water connection contains an electrical component. The housing must not be submerged in water.

There are electrical wires in the hose of Aqua-Stop. Never cut the water inlet hose, even if it is too long.

Installation, maintenance and repairs may only be carried out by a suitably qualified and competent person in strict accordance with current national and local safety regulations. Repairs and other work by unqualified persons can be dangerous. The manufacturer cannot be held liable for unauthorised work.

The integrated waterproof system offers protection from water damage, provided the following conditions are met:

- The dishwasher is correctly installed and plumbed in.
- The dishwasher is properly maintained and parts are replaced where it can be seen that this is necessary.
- The stopcock / supply valve has been turned off when the appliance is not used for a longer period of time (for example during holidays).
- The waterproof system will work even if the appliance is switched off. However, the appliance must remain connected to the electricity supply.

A damaged appliance can be dangerous. If the dishwasher gets damaged, switch it off at the mains and call your dealer or the service department.

Unauthorised repairs could result in unforeseen dangers for the user, for which the manufacturer cannot accept liability. Repairs should only be undertaken by an approved service technician.

Faulty components must only be replaced by original spare parts. Only when these parts are fitted can the safety of the appliance can be guaranteed.

Always disconnect the dishwasher from the electrical supply for maintenance work (switch off at the wall socket and remove the plug).

FULL_DW60BB890UAPET_DD68-00254C-00_EN.indd 11 2023-03-09 6:27:30

Safety information

If the connection cable is damaged it must be replaced with a special cable, available from the manufacturer. For safety reasons, this must only be fitted by the service department or an authorised service technician.

In countries where there are areas which may be subject to infestation by cockroaches or other vermin, pay particular attention to keeping the appliance and its surroundings in a clean condition at all times. Any damage which may be caused by cockroaches or other vermin will not be covered by the guarantee.

In the event of a fault or for cleaning purposes, the appliance is only completely isolated from the electricity supply when:

- it is switched off at the wall socket and the plug is withdrawn, or
- it is switched off at the mains, or
- the mains fuse is disconnected, or
- the screw-out fuse is removed (in countries where this is applicable).

Do not make any alterations to the appliance, unless authorised to do so by the manufacturer.

Never open the casing/housing of the appliance. Tempering with electrical connections or components and mechanical parts is highly dangerous and can cause operational faults or electric shock.

While the appliance is under guarantee, repairs should only be undertaken by a service technician authorised by the manufacturer. Otherwise the guarantee will be invalidated.

When installing the product, make sure there is space at the top, left, right and back of the product to ensure proper ventilation. If there is insufficient space between the product and the sink, it may damage the sink or allow mold to grow.

Make sure that your dishwasher's hardness level setting is correct as your area. (Refer to the "Salt storage" section on page 45.)

Please consult www.samsung.com/support for more information about materials and repair.

FULL_DW60BB890UAPET_DD68-00254C-00_EN.indd 12 2023-03-09 6:27:31

Installation

What's included

Make sure all the parts are included in the product package. If you have a question about the dishwasher or the parts, contact a local Samsung customer centre or your retailer. The actual appearance of the dishwasher may differ, depending on your model and country.

⚠ **CAUTION**

After unpacking the dishwasher, keep packaging materials out of children's reach to ensure their safety.

Installation kit (provided)

FBI (Fully Built-In, DW60B*8**B** / DW60B*7**B**) models



Top brackets (2 ea)



Custom panel fixers (2 ea)

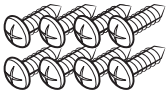

Ø4 X 12 screws (8 ea)



Ø4 X 16 screws (2 ea)



Ø4 X 43 screws (6 ea)

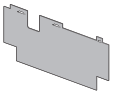

Rubber skirt



Protective sticker

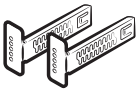

Kick plate brackets (2 ea)



Plastic caps (4 ea)



Check Valve (Applicable models only)

FULL_DW60BB890UAPET_DD68-00254C-00_EN.indd 13 2023-03-09 6:27:31

Installation

FBI (Sliding, DW60B*8**I**) models



Top brackets (2 ea)



Ø4 X 16 screws (12 ea)



Ø4 X 12 screws (8 ea)



Custom panel fixers-Top (2 ea)



Custom panel fixers-Bottom (2 ea)

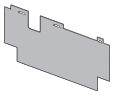

Rubber skirt



Protective sticker

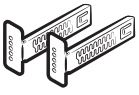

Kick plate brackets (2 ea)



Plastic caps (4 ea)

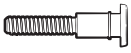

Sub foot



Check Valve (Applicable models only)

SBI (Semi Built-In, DW60B*7**S**) models



Top brackets (2 ea)



Custom panel fixers (2 ea)



Protective sticker

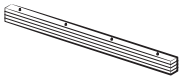

Wood spacers (4 ea)

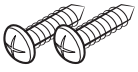

Ø4 X 16 screws (2 ea)



Ø4 X 43 screws (4 ea)

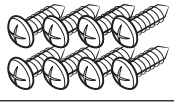

Ø4 X 12 screws (8 ea)

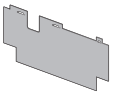

Rubber skirt (Applicable models only)



Plastic caps (4 ea)

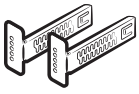

Kick plate brackets (2 ea)



Check Valve (Applicable models only)

FULL_DW60BB890UAPET_DD68-00254C-00_EN.indd 14 2023-03-09 6:27:31

BU (Built Under, DW60B*8**U** / DW60BG7**U**) models



Top brackets (2 ea)



Ø4 X 12 screws (8 ea)

Protective sticker

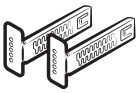

Kick plate brackets (2 ea)



Plastic caps (4 ea)



2 screws (for the bespoke door)

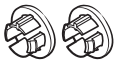

2 plastic caps (for the bespoke door)



Check Valve (Applicable models only)

Installation kit (not provided)



Hose clamp

FULL_DW60BB890UAPET_DD68-00254C-00_EN.indd 15 2023-03-09 6:27:32

Installation

Tools required (not provided)



Safety glasses



Gloves



Flashlight



Wrench (22 mm) for the front foot



Torx T20

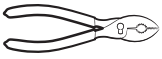

Pliers



Nipper

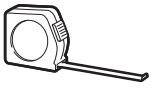

Tape measure



Pencil



Phillips screwdriver



Flat head screwdriver

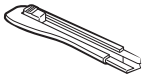

Cutting knife



Level



Hole saw (80-100 mm)

FULL_DW60BB890UAPET_DD68-00254C-00_EN.indd 16 2023-03-09 6:27:32

Installation requirements

To prevent a risk of fire, electric shock, or personal injury, all wiring and grounding must be done by a qualified technician.

Power supply

- An individual 220-240 V~, 50 Hz branch circuit that is dedicated to the dishwasher.
- Power outlet with a maximum allowable current of 16 A (maximum 11 A for the dishwasher)

⚠ **WARNING**

- Do not use an extension cord.
- Use only the power plug that comes with the dishwasher.
- After installation is complete, make sure the power plug is not bent or damaged.

Grounding

For permanent grounding, the dishwasher must be properly grounded to a grounded metal or permanent wiring system. The grounding conductor must be run with the circuit conductors and then connected to the grounding terminal or lead on the dishwasher.

⚠ **WARNING**

- Do not connect the ground wire to plastic plumbing, gas lines, or hot water pipes. Improperly connected grounding conductors may cause electric shock.
- Do not modify the power plug of the dishwasher. If the power plug does not fit the outlet, have a proper outlet installed by a qualified electrician.

Water supply

- The water supply line must support water pressures between 0.05 and 0.8 MPa.
- Water temperatures must be lower than 60 °C.
- The stopcock / supply valve with a 3/4" male thread must be installed for the water supply connection.

To reduce a risk of leaks:

- Make sure water taps are easily accessible.
- Turn the water supply valve off when the dishwasher is not in use.
- Check for any leaks at the water hose fittings on a regular basis.
- To stop any leak, seal the water line connections and joints using Teflon tape or sealing compound.

Aqua Stop

The Aqua Stop is an electrical component that is designed to prevent water leaks. The Aqua Stop is attached to the water hose and automatically cuts off the water flow in the event of damage to the hose.

⚠ **CAUTION**

- Handle the Aqua Stop with care.
- Do not kink or twist the water hose connected to the Aqua Stop. If the Aqua Stop is damaged, shut off the water taps and unplug the power plug immediately. Then, contact a local Samsung customer centre or a qualified technician.

FULL_DW60BB890UAPET_DD68-00254C-00_EN.indd 17 2023-03-09 6:27:33

Installation

Drain

If you are using a drain system dedicated to the dishwasher, connect the drain hose to a drain system that is between 30 cm and 70 cm off the ground. Connecting the drain hose to a drain system more than 80 cm off the ground can cause the drained water to flow backward.

Flooring

For safety, the dishwasher must be installed on a solidly constructed floor. Wooden floors may need to be reinforced to minimise vibrations. Avoid installing on carpet or soft tile. Carpeting and soft tile may cause vibrations and may cause your dishwasher to move slightly while operating.

⚠ **WARNING**

Do not install the dishwasher on a poorly supported structure.

- Make sure the dishwasher is level using the height adjustable feet.
- When leveling is complete, check if the door opens and closes properly.

Ambient temperature

Do not install the dishwasher in an area exposed to freezing temperatures. The dishwasher always retains some water in the water valve, pump, and hose. If the water freezes in the dishwasher or hoses, it may damage the dishwasher and its components.

Test run

After installing the dishwasher, run the Express cycle to make sure the dishwasher is installed correctly.

FULL_DW60BB890UAPET_DD68-00254C-00_EN.indd 18 2023-03-09 6:27:33

Built-in installation under the sink (For Free Standing model)

You can install the dishwasher under the sink. To do this, follow the instructions below.

⚠ **WARNING**

Samsung Electronics is not responsible for any product failure or damage that may arise from your installation of the free-standing model under the sink.

Preparation

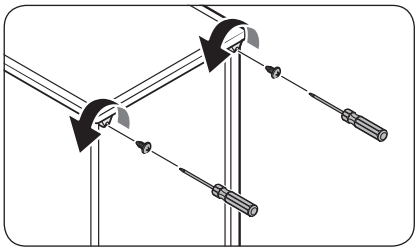

1. Remove the 2 screws from the top corners on the rear side of the dishwasher.

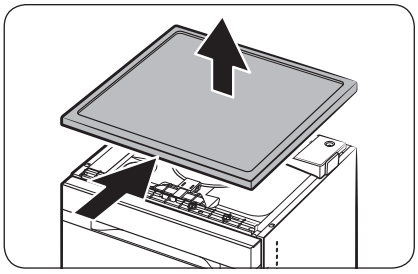

2. Slide the worktop of the dishwasher to the rear and lift up to remove it.
3. Refer to the next section and install the dishwasher under the sink.

FULL_DW60BB890UAPET_DD68-00254C-00_EN.indd 19 2023-03-09 6:27:33

Installation

Step-by-step installation

The installation procedure may differ depending on the model.

STEP 1 Select a location

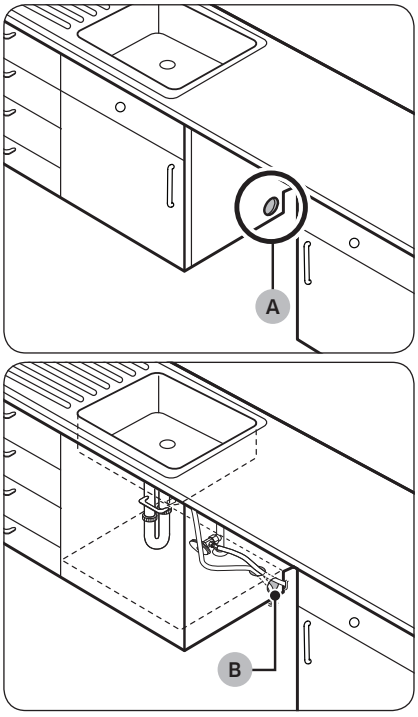

Select a location that meets the following conditions.

- The location must have a solid floor that can support the weight of the dishwasher.
- The location must be near a sink with easy access to the water supply, drain system, and electrical outlet.
- The location must let you load dishes into the dishwasher easily.
- The location must have sufficient space for the dishwasher door to open easily and provide enough space between the dishwasher and the cabinet sides.
- The rear wall must be free of obstructions.

Installation in a new location

If you install the dishwasher in a new location, follow these instructions before installing the dishwasher.

1. Using a hole saw, cut a hole into the side of the cabinet that holds the sink (A).
2. If the base inside the sink cabinet is raised above the kitchen floor and is higher than the connections on the dishwasher, make a hole in the base inside the cabinet and in the cabinet side (B).

NOTE

- If you are replacing an old dishwasher, check the existing connections for compatibility with the new dishwasher and replace the connections as needed.
- You may need to cut a hole in the opposite side of the cabinet according to the location of the electrical outlet.

FULL_DW60BB890UAPET_DD68-00254C-00_EN.indd 20 2023-03-09 6:27:34

Cut-out dimension

There may be a difference depending on the model.

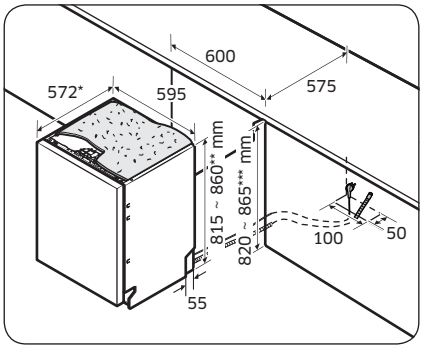

* 552 for Fully Built In model
** 895 for Sliding Door model
*** 900 for Sliding Door model

NOTE (For Free Standing model)

Check if the distance between the floor and the bottom of the worktop is more than 860 mm. If so, insert the sub foot included in the installation kit. For details, see the next section. If the distance is less than 860 mm, skip to STEP 2.

FULL_DW60BB890UAPET_DD68-00254C-00_EN.indd 21 2023-03-09 6:27:34

Installation

STEP 2 Check the water line

- The water line pressure must be between 0.05 and 0.8 MPa.
- Make sure that the water temperature does not exceed 60 °C. Hot water over 60 °C may cause the dishwasher to malfunction.
- Make sure that the water supply valve is turned off before connecting the water supply line to the dishwasher.

STEP 3 Arrange the hoses

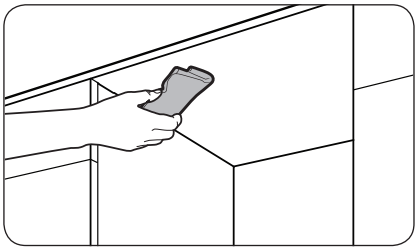

1. Clean the bottom of the countertop.

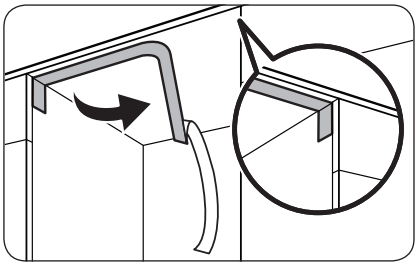

2. Attach the protective sticker as shown.

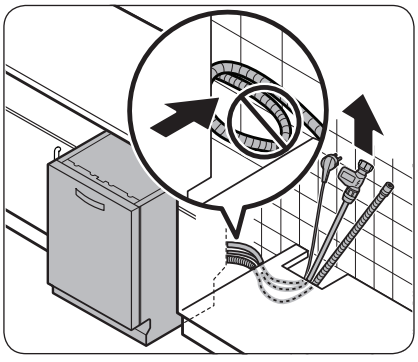

3. Pull the power plug, the water hose, and the drain hose through the sink hole.

⚠ **CAUTION**

- Use caution not to kink or step on the power plug or the hoses.
- Do not remove the brown paper on the back of the dishwasher. The paper is used to keep the rear side clean against the wall.

FULL_DW60BB890UAPET_DD68-00254C-00_EN.indd 22 2023-03-09 6:27:34

STEP 4 Install the custom panel

BU (Bespoke, DW60BB8*****) models

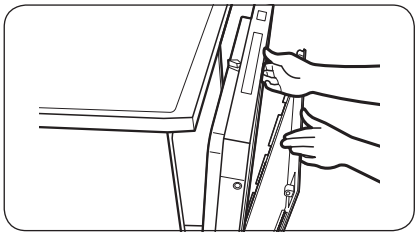

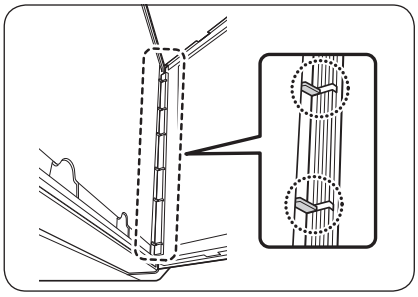

1. Open the door and fit the custom panel in the front bottom of the door.
   Make sure that the ribs of the panel fit into the corresponding holes (totaling 6) of the door.

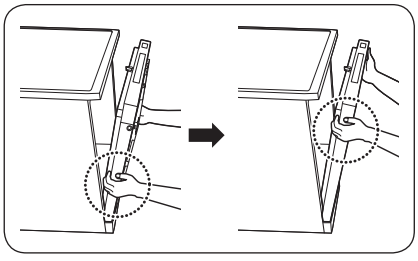

2. While holding the door and the custom panel with both hands, press the panel evenly from bottom to top to lock into the dishwasher.

FULL_DW60BB890UAPET_DD68-00254C-00_EN.indd 23 2023-03-09 6:27:34

Installation

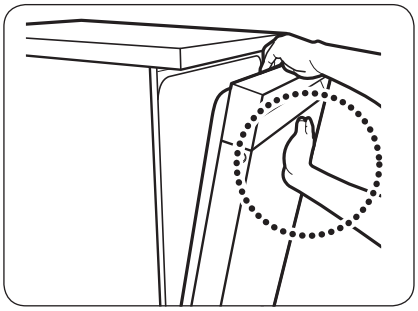

3. When both sides of the panel lock into place, press the top center of the custom panel to secure it to the top of the door.

NOTE

- Make sure that the custom panel fits in the dishwasher properly.
- If the gap between the dishwasher and the custom panel is below 2 mm, proper installation is done. For 2 mm or more, remove the custom panel and try again.

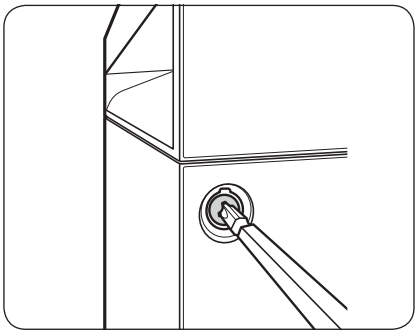

4. Unpack the caps and screws (two for each) included in the product package.
5. Tighten the screws on either side of the dishwasher.

NOTE

When tightening the screw on either side, make sure to check the gap between either side as the custom door may lean in either side.

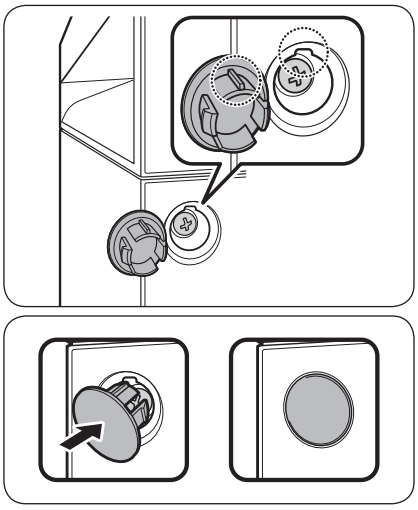

6. Insert the caps on either side. Make sure the rib of the cap fits in the hole of the dishwasher in the right direction.

FULL_DW60BB890UAPET_DD68-00254C-00_EN.indd 24 2023-03-09 6:27:35

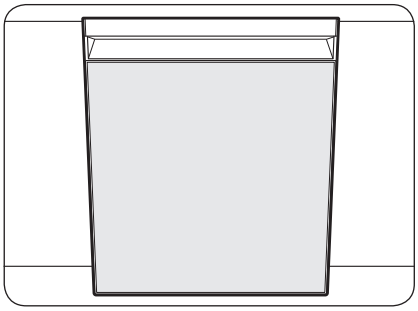

7. This is the completion of mounting the custom panel.

STEP 5 Level the dishwasher

For Built-In models

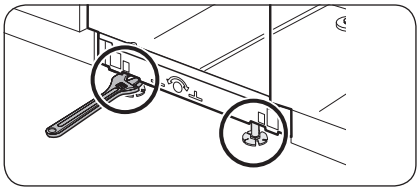

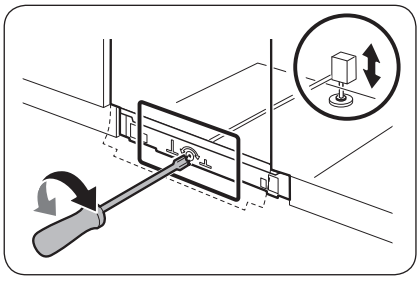

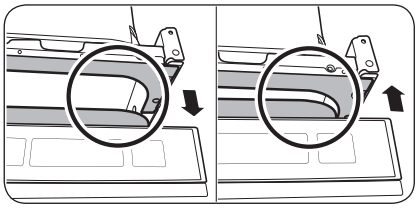

You can adjust the height of the dishwasher to level it. Note that in these steps, the dishwasher is currently inserted halfway.

1. Use the level to check if the dishwasher is level.
2. To adjust the front height, use a 22 mm wrench.
   - To lower the height, turn the foot counter clockwise.
   - To raise the height, turn the foot clockwise.
3. To adjust the rear height, insert the Torx T20 screwdriver in the bottom center of the dishwasher.
   - To lower the height, turn the screwdriver clockwise.
   - To raise the height, turn the screwdriver counter clockwise.
4. When levelling is complete, check if the door opens and closes properly.

FULL_DW60BB890UAPET_DD68-00254C-00_EN.indd 25 2023-03-09 6:27:35

Installation

For Free Standing models

You can adjust the height of the dishwasher up to 45 mm using the levelling legs.

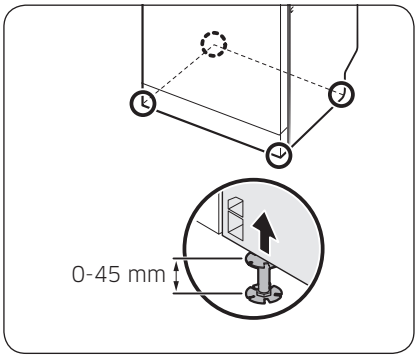

1. While slightly lifting the front or rear (or both in turns) of the dishwasher, turn the levelling legs to adjust the height.
2. When complete, use the leveler to make sure the dishwasher is level.
3. Insert the dishwasher under the sink and make sure to secure at least 4 mm space between the top of the dishwasher and the bottom of the sink plate.

⚠ **CAUTION**

Do not arrange the power cord of the dishwasher using a metallic cable tie.

FULL_DW60BB890UAPET_DD68-00254C-00_EN.indd 26 2023-03-09 6:27:35

STEP 6 Attach the trim

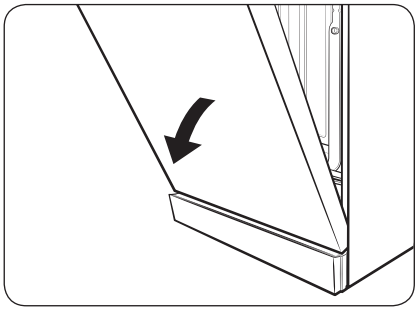

1. Open the door halfway down.

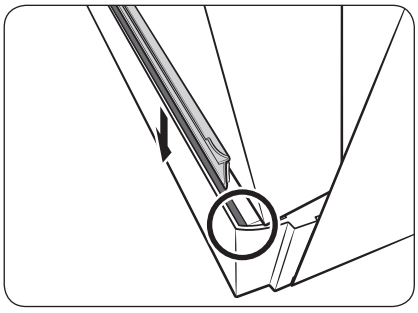

2. Remove the adhesive rear tape of the trim. Then, insert the trim in the lower groove of the dishwasher.

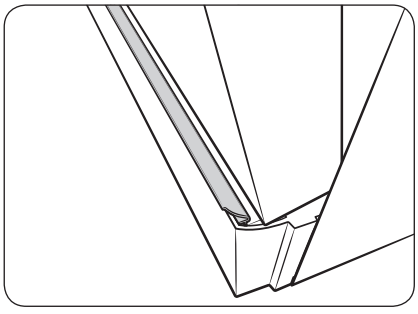

3. This is how the trim looks after attachment.

FULL_DW60BB890UAPET_DD68-00254C-00_EN.indd 27 2023-03-09 6:27:35

Installation

STEP 7 Secure the dishwasher

You can drill the side holes to secure the dishwasher to the cabinet sides.

To the sides

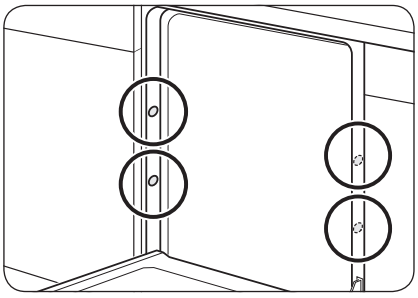

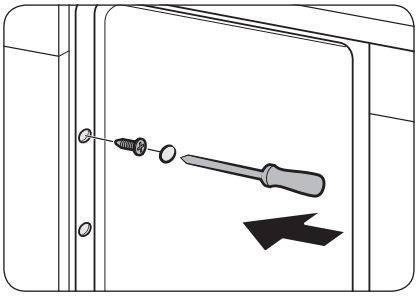

⚠ **CAUTION**

If the plastic cap is not assembled, water may leak and cause a fire or electric shock.

1. Tighten the 4 screws (Ø4 X 12) to the 4 places (marked on the illustration).
2. Insert the provided plastic caps to the 4 places where screws are fastened.
3. Connect the water hose, but do not open the water tap until installation is complete.

STEP 8 Connect the drain hose

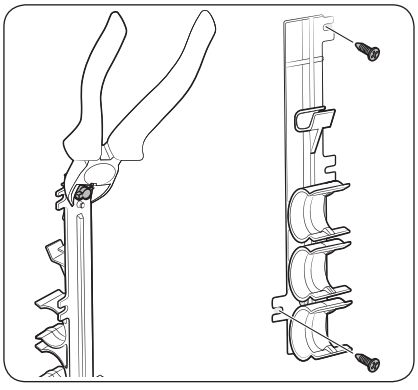

1. Detach the hose holder from the dishwasher, and then cut off the protruding part from the holder as shown.
2. Fix the holder to a wall by tightening the 2 screws (Ø4 X 12).

FULL_DW60BB890UAPET_DD68-00254C-00_EN.indd 28 2023-03-09 6:27:36

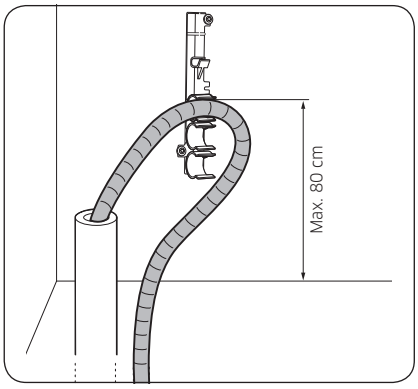

3. Insert the drain hose into the holder so that the drain hose is positioned 30 cm to 80 cm from the bottom.

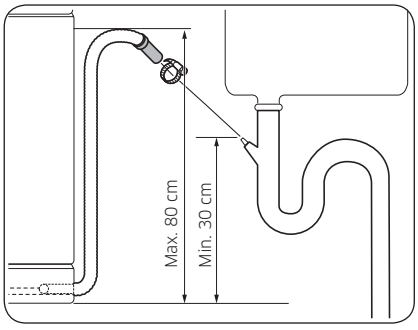

4. Connect the drain hose to the drain outlet.

⚠ **CAUTION**

- Install the drain system properly so that the drain hose does not come out of the drain outlet in the draining process.
- Make sure that the drain hose, supply hose, and power cord is not kinked or folded.

STEP 9 Final check

1. Remove all foam, paper packaging, and unnecessary parts from inside the dishwasher.
2. Turn the power circuit breaker on.
3. Open the water supply valve to supply water to the dishwasher.
4. Plug in and turn the dishwasher on. Then, select and run the Express cycle.
5. Check if the dishwasher turns on normally and if there are any water leaks while the dishwasher is operating. Make sure to check for water leaks on both ends of the water line and the drain hose connector.

FULL_DW60BB890UAPET_DD68-00254C-00_EN.indd 29 2023-03-09 6:27:36

Installation

Skirting board

You can attach the skirting board according to the model or installation conditions.

Skirting board

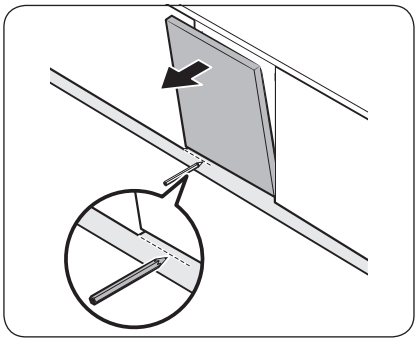

1. Put the skirting board on the bottom of the dishwasher.
2. Open the door of the dishwasher, and draw a baseline on the skirting board where it interferes with the door.

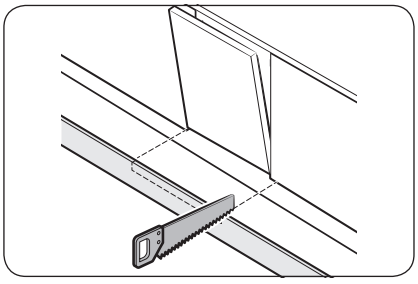

3. Follow the baseline and cut the skirting board using a saw.

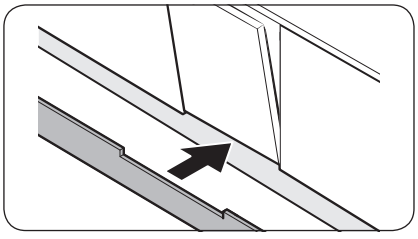

4. Attach the cut skirting board to the bottom of the dishwasher. Make sure the board does not interfere with the door of the dishwasher.

FULL_DW60BB890UAPET_DD68-00254C-00_EN.indd 30 2023-03-09 6:27:36

Pre-cut skirting board (Except Free Standing model)

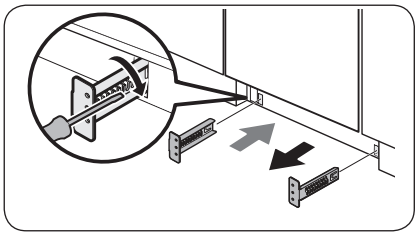

1. Insert the provided brackets to the bottom of the dishwasher. Turn them into position.
- See the figure on the left for the correct attaching sequence and place of the brackets.

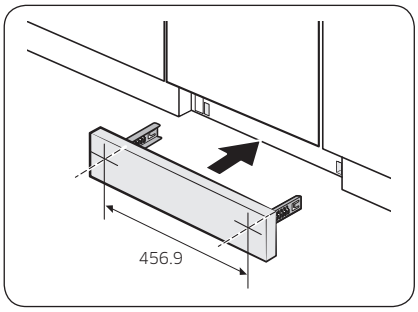

2. Insert the pre-cut skirting board into the brackets first, and then tighten the screws to fix the board. See the figure on the left and make sure the brackets are positioned in the correct place.

⚠ **CAUTION**

Make sure the skirting board does not interfere with the dishwasher's door opening and closing.

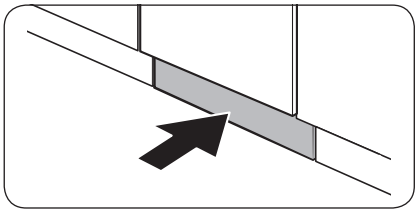

3. Push the skirting board with the brackets into the bottom of the dishwasher as shown.

FULL_DW60BB890UAPET_DD68-00254C-00_EN.indd 31 2023-03-09 6:27:36

Installation

SmartThings (Applicable models only)

Wi-Fi connection

On your phone, go to Settings and connect to your home Wi-Fi network.

Download

On an app market (Google Play Store, Apple App Store, Samsung Galaxy Apps), find the SmartThings app with a search term of “SmartThings”. Download and install the app on your device.

NOTE

- The SmartThings app is designed for Android 8.0 or later, IOS 13.0 or later.
- For improved performance, the SmartThings app is subject to change without notice, or discontinued support according to the manufacturer’s policy.

Log in

You must first log into SmartThings with your Samsung account. To create a new Samsung account, follow the instructions on the app. You don’t need a separate app to create your account.

NOTE

If you have a Samsung account, use the account to log in. A registered Samsung phone user automatically logs in.

To register your device to SmartThings

1. Make sure your phone is connected to a wireless network.
2. Run SmartThings on your phone. IPhone users are required to provide the login information each time they access the app.
3. When a message of “A new device is found.”, select Add.
4. If no message appears, select + and select your dishwasher in a list of devices available. If your dishwasher is not listed, select Device Type > Specific Device Model, and then add your dishwasher manually.
5. Follow the on screen instructions to complete the connection process for your dishwasher. Press and hold Smart Control for more than 5 seconds until the “AP” message appears on the display. Your dishwasher will be registered with the app.
6. When the process is complete, your dishwasher will appear in the list of devices on your SmartThings App.
7. Tap the dishwasher icon to open the dishwasher page.
8. When a network connection is established, the Wi-Fi icon lights up on your dishwasher.

FULL_DW60BB890UAPET_DD68-00254C-00_EN.indd 32 2023-03-09 6:27:37

Dishwasher app

Integrated control: You can monitor and control your dishwasher both at home and on the go.

- Select the dishwasher icon on SmartThings. The dishwasher page appears.
- Check the operation status or notifications related to your dishwasher, and change options or settings if necessary.

NOTE

- This device is designed for household use only (Class B), and can be used in all residential areas.
- This device may cause wireless interference, and neither the manufacturer or the installer of this device can provide a safety measure of any kind.
- Recommended encryption methods are WPA/TKIP and WPA2/AES. Newly developed Wi-Fi protocols or unapproved Wi-Fi protocols are not supported.
- The reception sensitivity of a wireless network may be affected by surrounding wireless environments.
- If your Internet provider has registered the MAC address of your PC or the modem module for permanent use, your Samsung dishwasher fails to connect to the Internet. If this is the case, contact your Internet provider.
- The Internet firewall may interrupt your Internet connection. If this happens, contact your Internet provider.
- If Internet failure continues after following the measurement of your Internet provider, contact a local Samsung retailer or service centre.
- For installing wired and wireless routers, refer to the user manual of the router you use.
- Samsung dishwasher supports the Wi-Fi 2.4 GHz protocols.
- Samsung dishwasher supports the IEEE802.11 b/g/n (2.4 GHz), Soft-AP protocols. (IEEE802.11n is recommended)
- An unapproved wired/wireless router may fail to connect to Samsung dishwasher.
- The SmartThings app is available on Android devices with OS 8.0 or higher and iOS devices with iOS 13 or higher. The app is optimised for Samsung phones (Galaxy S and Note series).
- Some functions of the app may operate differently on third-party devices.
- The app is subject to change without notice for improved performance.
- In addition, further updates on the app or the function in the app may stop caused by usability and security reasons, even if updates are currently supported on your OS.
- Your device uses non-harmonised frequency and is intended for use in all European countries. The WLAN can be operated in the EU without restriction indoors, but cannot be operated outdoors in France.
- You can easily install the SmartThings app or use the product with your phone by scanning the QR code on the attached label.
- Hereby, Samsung Electronics, declares that the radio equipment type appliance is in compliance with Directive 2014/53/EU. The full text of the EU declaration of conformity is available at the following internet address: The official Declaration of conformity may be found at http://www.samsung.com, go to Support > Search Product Support and enter the model name.

FULL_DW60BB890UAPET_DD68-00254C-00_EN.indd 33 2023-03-09 6:27:37

Installation

- The overall standby power consumption is 2.0 W in which all network ports stay in “on” condition.
  - Data determined according to standard EN 50564 and Regulation (EC) No 1275/2008

Wi-Fi	
Frequuency range	Transmitter power (Max)
2412 MHz - 2472 MHz	20 dBm

SmartThings

Category	Checkpoint	Description
Monitoring	Washing status	You can check the current cycle and its options, and the remaining cycle time.
	Smart Control	The Smart Control status is shown for the dishwasher.
	Energy monitoring	Use this to monitor the energy consumption status.
Control	Start/Pause/Cancel	Select a cycle and necessary options, and then select Start/Pause/Cancel to start an operation, to stop temporarily, or to cancel the current operation.
	My Favorite	Add frequently used cycles and options to My Favorite for later use.
	Delay Start	Set Delay Start to start the cycle at a scheduled time (up to 24 hours).
Notification	Cycle completed	Notifies you the current cycle is complete.
	Detergent	Notifies you if the dishwasher is out of salt or rinse aid.

FULL_DW60BB890UAPET_DD68-00254C-00_EN.indd 34 2023-03-09 6:27:37

Open Source Announcement

The software included in this product contains open source software.
The following URL http://opensource.samsung.com/opensource/SMART_TP1_0/seq/0 leads to open source license information as related to this product.

FULL_DW60BB890UAPET_DD68-00254C-00_EN.indd 35 2023-03-09 6:27:37

Before you start

Follow these instructions carefully to ensure proper installation of the dishwasher and to prevent accidents when washing dishes.

Dishwasher at a glance

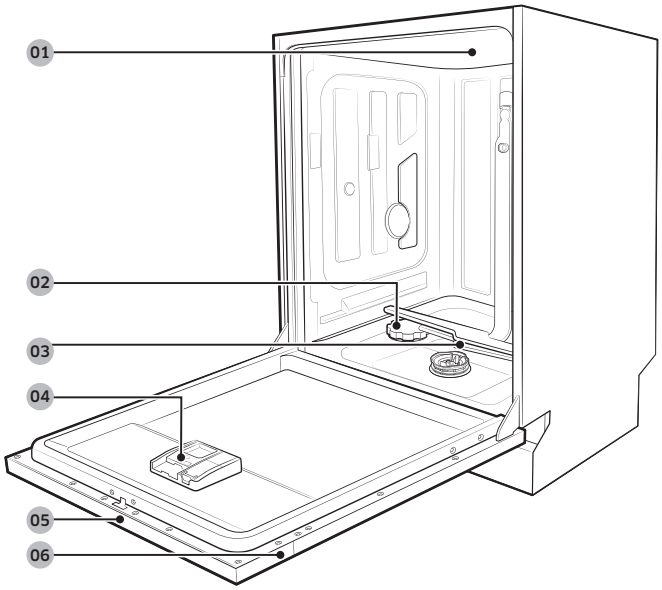

01 Top nozzle
02 Salt storage
03 Lower nozzle
04 Dispenser
05 Control panel
06 Door

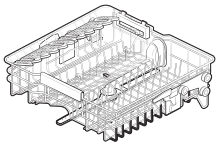

Upper rack

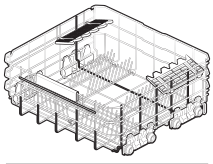

Lower rack

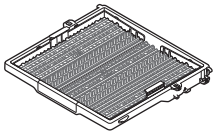

Cutlery rack (Applicable models only)



Cutlery basket (Applicable models only)

FULL_DW60BB890UAPET_DD68-00254C-00_EN.indd 36 2023-03-09 6:27:38

⚠ **CAUTION**

- Do not wash items that are covered with ash, sand, wax, lubricating grease, or paint. These materials will damage the dishwasher. Ash does not dissolve and will spread inside the dishwasher.
- Remove food remains such as bones, fruit seeds, etc. and waste such as toothpicks, paper napkins, etc. from your dishes. Food remains and waste can make noise, cause the dishwasher to malfunction, and damage your dishes and dishwasher.

Unsuitable items for the dishwasher

⚠ **WARNING**

Wash only items such as glass, porcelain, and cutlery which the manufacturer declares as dishwasher safe. Do not wash aluminium (for example grease filters). The dishwasher may damage aluminium, or in extreme cases, cause a severe chemical reaction.

Do not wash the following items in the dishwasher.

- Copper, brass, tin, ivory, and aluminium items or items with adhesive
- Non-heat resistant plastics
- Craft items, antiques, valuable vases, and decorative glassware
- Pottery or glazed-ceramic items
- Wooden cutlery and crockery or items with wooden parts
- Delicate glassware or glassware containing lead crystal. Clouding may occur on the glassware after frequent washing.

NOTE

Silverware that has contacted foods containing sulphur may become discoloured. Food with sulphuric content include egg yolks, onions, mayonnaise, mustard, fish, fish brine, and marinades.

FULL_DW60BB890UAPET_DD68-00254C-00_EN.indd 37 2023-03-09 6:27:38

Before you start

Basic use of racks

Height adjustment

You can adjust the height of the upper rack so that the lower rack can accommodate larger sized dishes. Depending on the height of the upper rack, the lower rack can accommodate plates up to 30 cm in diameter, and the upper rack can accommodate plates up to 18 cm (with Cutlery rack) or 25 cm (without Cutlery rack) in diameter.

⚠ **CAUTION**

- Adjust the height of the upper rack before loading dishes into the rack. Adjusting the rack after loading the dishes may damage the dishes.
- Make sure to hold both handles when adjusting, or the dishwasher door may not close properly.

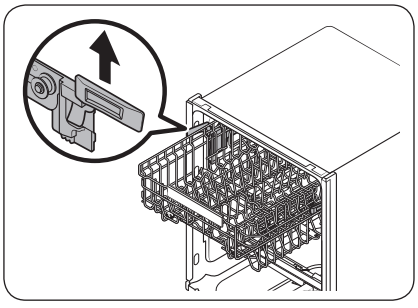

- To raise the upper rack, pull the upper rack upwards. The adjustable handle will latch, and the upper rack will raise.
- To lower the upper rack, hold both the adjustable handles located at the left and right sides of the upper rack, and then evenly press down.

Upper rack removal

⚠ **CAUTION**

- Do not operate the dishwasher without the upper rack. Otherwise, noises occur and the dishwasher does not operate properly.
- Because the upper rack is removable, insert the upper rack properly to ensure the dishwasher operates normally.

Pull the upper rack to the front until it is fully extended, and then lift it slightly to remove. See the following figures.

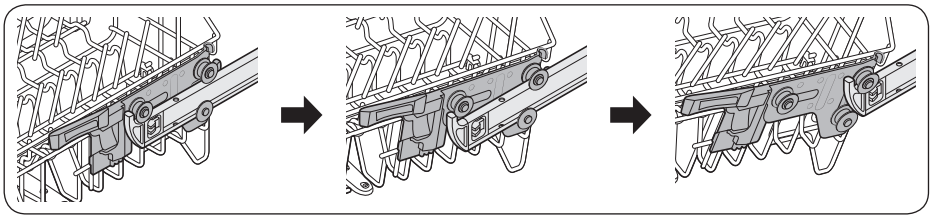

FULL_DW60BB890UAPET_DD68-00254C-00_EN.indd 38 2023-03-09 6:27:38

Loading dishes

Lower rack

Recommended that you place large items, that are difficult to clean (such as pots, pans, lids, serving dishes and bowls), in to the lower rack.

It is preferable to place serving dishes and lids on the side of the racks in order to avoid blocking the rotation of the upper nozzle. Pots, serving bowls, etc. must always be placed top down.

Deep pots should be slanted to allow water to flow out.

The lower rack features folding tines to easily load larger pots and pans.

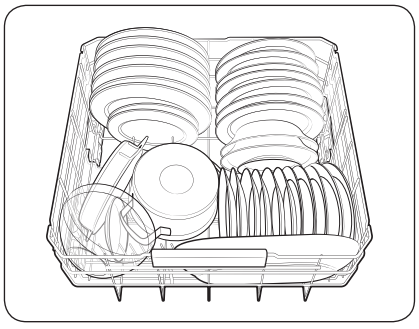

DW60B*8***** / DW60B*75**** models

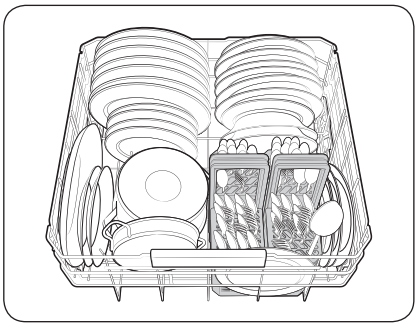

DW60B*73**** models

NOTE

Long items, serving cutlery, salad servers and big knives should be placed on the shelf so that they do not obstruct the rotation of the nozzles.

Using the folding tines

For better stacking of pots and pans, the tines can be folded down as show in the figure.

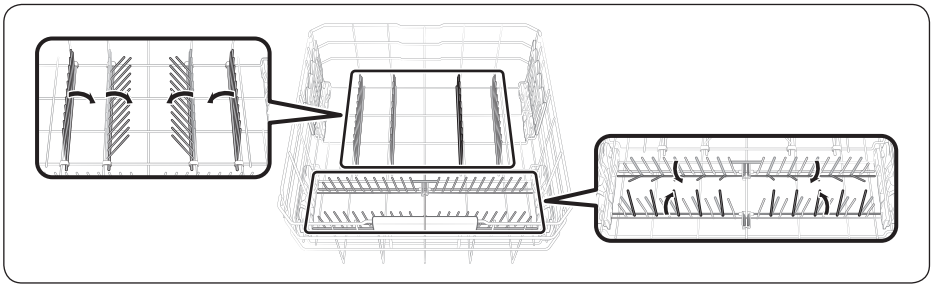

FULL_DW60BB890UAPET_DD68-00254C-00_EN.indd 39 2023-03-09 6:27:40

Before you start

Upper rack

The upper rack is designed to hold more delicate and lighter dishware such as glasses, coffee and tea cups and saucers, as well as plates, small bowls (as long as they are not too dirty). Position the dishes and cookware so that they will not get moved by the spray of water. Always place glasses, cups & bowls upside down.

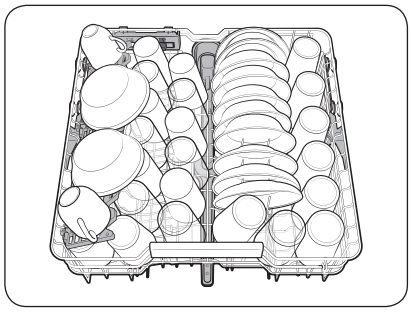

DW60B*8***** / DW60B*75**** models

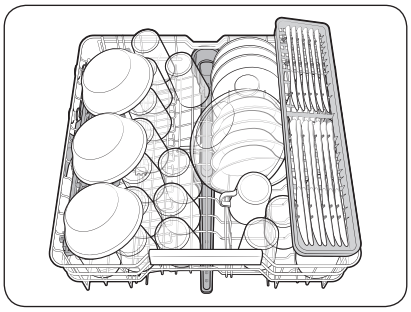

DW60B*73**** models

Guide Tines

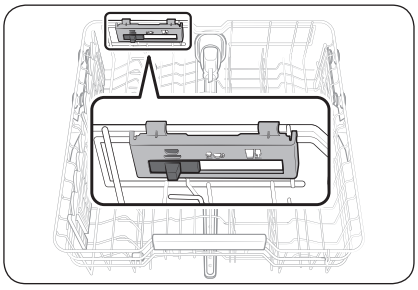

Upper rack

You can load dishes into the central rack in various ways by changing the guide tines. If the guide button is moved to the right, you can load standard wine glasses. If the guide button is in the middle, you can load shorter wine or brandy glasses. If the guide button is on the left, you can load bowls and plates.

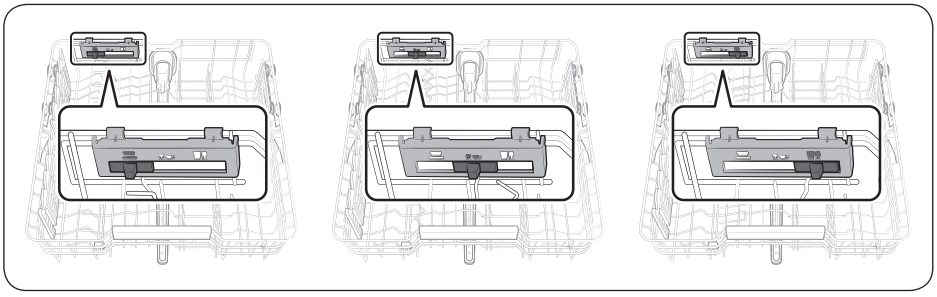

FULL_DW60BB890UAPET_DD68-00254C-00_EN.indd 40 2023-03-09 6:27:42

Cutlery rack (DW60B*8***** / DW60B*75**** models)

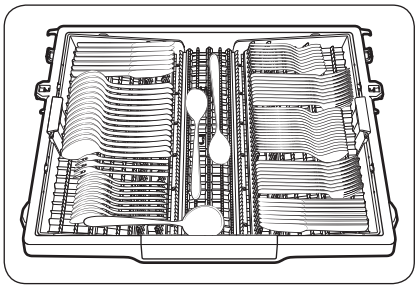

The cutlery rack is best for flatware and cooking or serving utensils. Use the cutlery rack to organize flatware or utensils.

NOTE

The cutlery rack can be removed if you need more space on the upper rack to clean larger items.

Cutlery Rack Tray (Only for DW60B*89**** / DW60B*85****)

You can easily move cutlery tray in the cutlery rack. The trays can move up and down.

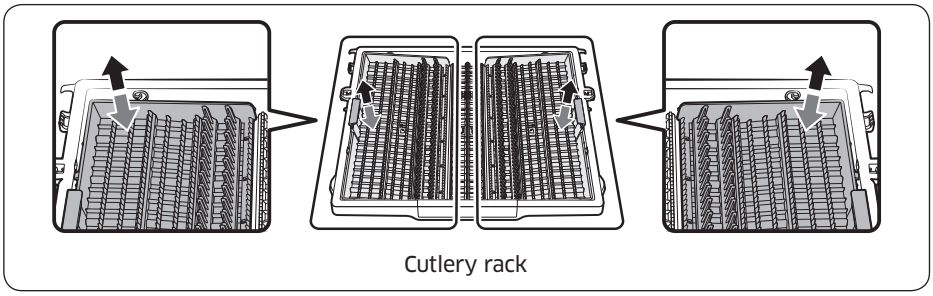

Cutlery rack

Using the glass support

The glass support is especially suited for wine glasses. Hang wine glasses onto the pegs of the glass support. Fold the glass support back when it is not being used.

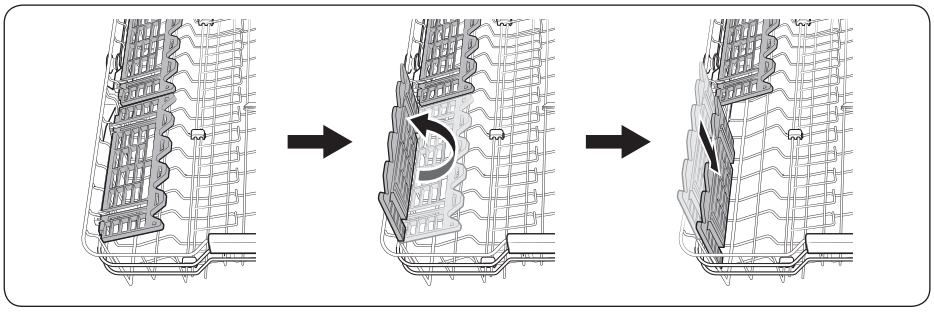

FULL_DW60BB890UAPET_DD68-00254C-00_EN.indd 41 2023-03-09 6:27:44

Before you start

Detergent compartment

Apply detergent as recommended for the selected cycle to ensure best performance.

⚠ **WARNING**

- Do not place dishwasher detergent in your mouth. Avoid breathing in detergent fumes. Dishwasher detergent contains irritants and caustic chemicals that can induce respiratory conditions. If you have consumed dishwasher detergent or inhaled detergent fumes, seek medical attention immediately.
- Keep dishwasher detergent out of children's reach.

⚠ **CAUTION**

Use dishwasher detergent only. Other types of detergent produce excessive foam, which may decrease the dishwasher's performance or cause it to malfunction.

Filling the detergent

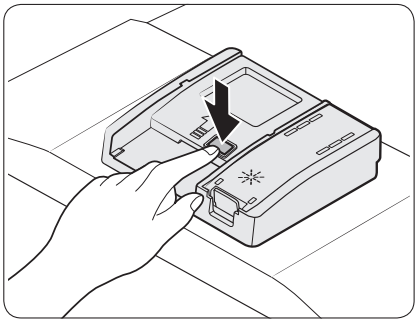

1. Open the detergent dispenser cap by pressing the detergent dispenser catch.

NOTE

The cap remains open at the end of a cycle.

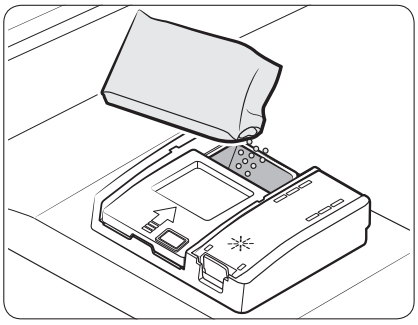

2. Add the recommended amount of detergent to the main wash detergent compartment.

NOTE

There is no separate button that is specific to using tablet detergents.

FULL_DW60BB890UAPET_DD68-00254C-00_EN.indd 42 2023-03-09 6:27:44

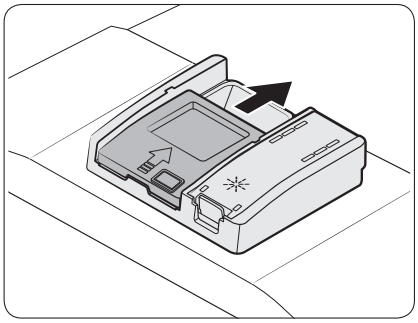

3. Close the lid by sliding it up.

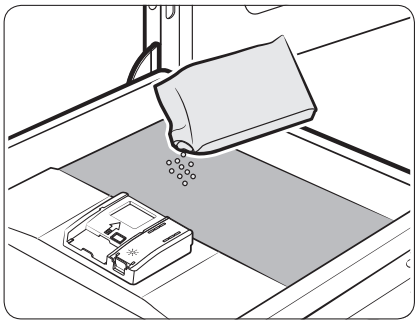

4. If the items are heavily soiled, pour a small amount of detergent onto the door for better cleaning results.

NOTE

The additional detergent will activate during the pre-wash process.

The cover opens automatically to dispense the detergent during the wash.

FULL_DW60BB890UAPET_DD68-00254C-00_EN.indd 43 2023-03-09 6:27:44

Before you start

Rinse aid reservoir

Rinse aid improves the drying performance of the dishwasher. When the Rinse Refill indicator lights up on the control panel, refill with rinse aid. Only use liquid rinse aid. Powdered rinse aid will clog the reservoir opening and cause the dishwasher to malfunction.

⚠ **CAUTION**

- Do not apply any type of detergent to the rinse aid reservoir.
- Do not excessively fill the reservoir. Excessive rinse aid may overflow during a cycle.

Filling the rinse aid

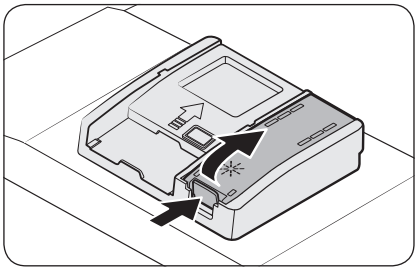

1. Open the rinse aid reservoir cap.

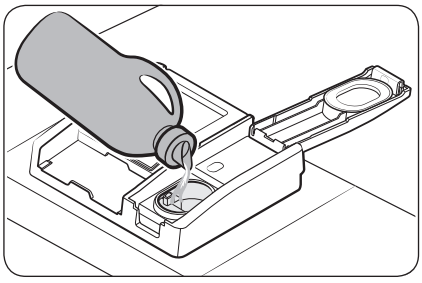

2. Fill the rinse aid reservoir with rinse aid.

⚠ **CAUTION**

Do not fill the reservoir above the full level indicator. Excess rinse aid can overflow during the wash cycle.

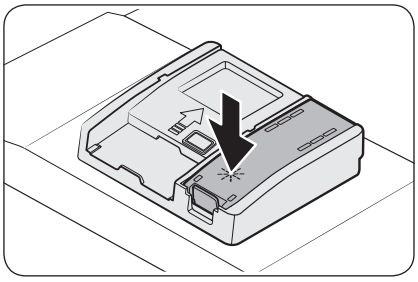

3. Close the rinse aid reservoir cap.

FULL_DW60BB890UAPET_DD68-00254C-00_EN.indd 44 2023-03-09 6:27:45

Salt storage

⚠ **CAUTION**

- Use dishwasher-specific salt only. Do not use any other type of salt or solvent. This may damage the salt storage and the water softening system.
- To prevent corrosion caused by an excessive amount of salt or salty water, always fill the salt storage before a washing cycle gets started.

Filling the salt storage

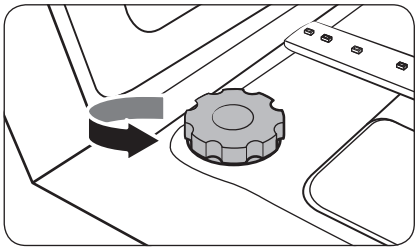

1. Open the door.
2. Turn the cap counterclockwise to open.

NOTE

When you open the softener lid, clean water stored for about one minute may run out. Add salt to stop the water from leaking out.

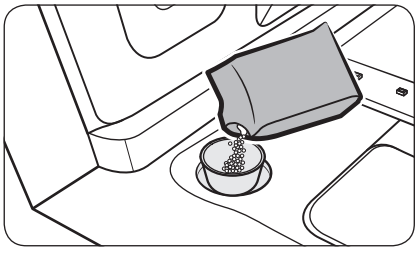

3. Fill the salt storage with water (only required when using the dishwasher for the first time).
4. Apply dishwasher salt.

⚠ **CAUTION**

- The maximum capacity is about 1 kg. Do not exceed the capacity.
- Exceeding the capacity may affect the dishwasher performance.

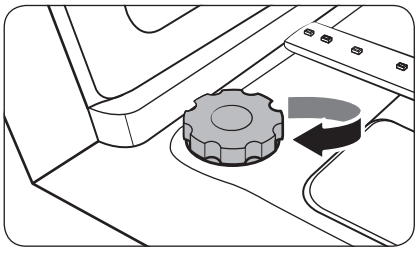

5. Turn the cap clockwise to close.

NOTE

- To clean excess salt or salt water from dishwasher, run the Express cycle.
- Depending on the size of the salt grains, it may take a while for the salt to dissolve and the indicator ( ) to turn off.

Salt indicator

The indicator ( ) turns on if there is not enough salt for the next several cycles.

FULL_DW60BB890UAPET_DD68-00254C-00_EN.indd 45 2023-03-09 6:27:45

Before you start

Settings

You can change your settings to your preference. To change the settings, press the **Option** button. Then you can navigate through sub menus on displayed by **Left/Right** buttons.

Delay Start 1h-24h > Dose per Rinse Off – Extra High > Water Hardness Level 0 - Level 5 > My Cycles >

Auto Release Dry On/Off > Child Lock On/Off > AI Pattern On/Off > Sound On/Off >

Language > Wi-Fi On/Off > Factory Reset >

Delay Start

- Find the **Delay Start** option with the **Left/Right** buttons and select it by using **START** button.
- Press **Left/Right** buttons to change the time in 1-hour.
- Press **START**, and then close the door.

Dose per Rinse

- Find the **Dose per Rinse** option.
- Select a Dose per Rinse from Extra Low to Extra High (default: Medium)

AI Pattern

Conveniently use the cycles that you use frequently. You can set your dishwasher to remember the frequently used cycles and settings and display them in frequently used order.

- In the **Settings** mode, press the **Left/Right** buttons to select the **AI Pattern** option.
- Select **On** or **Off**, and then press the **START** button to finish the setting.
  - The default setting is **On**.
  - Set this function to **Off** if you do not want to use this function.
- When you turn off the function, all the saved data resets.

FULL_DW60BB890UAPET_DD68-00254C-00_EN.indd 46 2023-03-09 6:27:45

Water Hardness

- Find the **Water Hardness** option.
- Select a water hardness level from Level 0 to Level 5 (default: Level 4)

NOTE

If the water hardness level in your area is 0, you do not need to use dishwasher-specific salt. However, you must set the water hardness setting for the dishwasher to 0.

Water hardness level

Level	Water hardness				Regeneration softening/washing cycle (ECO program)	Salt injection
	°dH	°TH	mmol/L	Range		
0	<6	<10	<1.0	No recycle	No	No
1	6-14	10-25	1-2.5	1/8	Yes	Yes
2	14-23	25-40	2.5-4.0	1/5	Yes	Yes
3	23-31	40-55	4.0-5.5	1/3	Yes	Yes
4	31-40	55-70	5.5-7.0	1/2	Yes	Yes
5	>40	>70	>7.0	1/1	Yes	Yes

Recommended using soft water for better results. Hard water contains impurities that can reduce the washing performance. You will need to soften the water if the supplied water is harder than 1.0 mmol/L (6 °d – German scale).

- To soften the water, you need dishwasher-specific salt and configuration of the water hardness level according to your area. For more information about the water hardness level in your area, contact your local water department.
- If the hardness level of the supplied water supply is unsteady, set the dishwasher to the highest measurement. For example, if the water hardness reading ranges from 6.7 mmol/L to 9.0 mmol/L, set the dishwasher to 9.0 mmol/L.
- The dishwasher's default water hardness level is 4 (5.5-7.0 mmol/L). If this setting matches the water hardness level in your area, you do not need to change it.
- Regeneration will be operated in dry phase with an additional 2.3-2.7 L of water being used and 22-27 minutes taken for the cycle. The energy used may be increase however this should be by an insignificant amount.

FULL_DW60BB890UAPET_DD68-00254C-00_EN.indd 47 2023-03-09 6:27:45

Before you start

Auto Release Dry

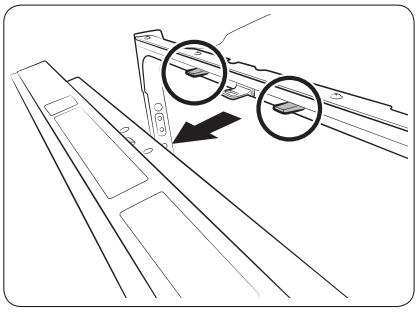

To improve drying performance, the door opens automatically in the drying process. '0' will be displayed when the current cycle is complete.

Find **Auto Release Dry** option. Then you can select **On** or **Off** the **Auto Release Dry** function.

NOTE

- Once the door opens in Auto Release Dry mode, the door cannot be closed manually for the next 2 minutes.
- Disabling Auto Release Dry mode can affect the drying results. Enable Auto Release Dry for better results.

Child Lock

To prevent children from playing with the dishwasher, **Child Lock** locks all button controls except for Power.

- Find **Child Lock** function.
- You can select **On** of **Off** the **Child Lock** function.
- Child Lock remains active after the dishwasher restart. To cancel Child Lock, you must off it first.

Sound

Find **Sound** function. Then you can **On** or **Off** the **Sound** function.

Wi-Fi

Find **Wi-Fi** function. Then you can **On** or **Off** the **Wi-Fi** function.

Factory Reset

All the changed options can be initialized by using **Factory Reset** option.

- Find **Factory Reset** function. Then you can choose whether to reset all options.

FULL_DW60BB890UAPET_DD68-00254C-00_EN.indd 48 2023-03-09 6:27:45

Settings (Except DW60BB89* models)

You can change the Sound, Brightness, Dose per Rinse, Water softener and Auto Door to your preference. To change the settings, press the **Hygiene Plus** and **Delay Start** buttons simultaneously for 3 seconds.

Press **Hygiene Plus** to navigate through sub menus, and press **Delay Start** to confirm your changes.

Sound U1/U0 > Brightness* b0-b5 > Dose per Rinse F0-F6 >

Water softener L0-L5 > Auto Release Dry A1/A0

* applicable models only

After setting is finished, press **Power** button or **Hygiene Plus** and **Delay Start** button.

Sound

Press **Hygiene Plus** until '**U1**' or '**U0**' is displayed. To mute the dishwasher, select '**U0**', and then press **Delay Start**. To unmute, select '**U1**', and then press **Delay Start**.

Brightness (Applicable models only)

Press **Hygiene Plus** until '**b0** - **b5**' is displayed. The higher the number, the brighter the display. Select a number, and then press **Delay Start**.

Dose per Rinse

Press **Hygiene Plus** until '**F0** - **F6**' is displayed. Select a rinse aid level from Level 0 to Level 6 (default: F4), and then press **Delay Start**.

FULL_DW60BB890UAPET_DD68-00254C-00_EN.indd 49 2023-03-09 6:27:45

Before you start

Water softener (Applicable models only)

Press **Hygiene Plus** until '**L0** - **L5**' is displayed. Select a water hardness level from Level 0 to Level 5 (default: L4), and then press **Delay Start**.

NOTE

If the water hardness level in your area is 0, you do not need to use dishwasher-specific salt. However, you must set the water hardness setting for the dishwasher to 0.

Water hardness level

Level	Water hardness				Regeneration softening/washing cycle (ECO program)	Salt injection
	°dH	°TH	mmol/L	Range		
0	<6	<10	<1.0	No recycle	No	No
1	6-14	10-25	1-2.5	1/8	Yes	Yes
2	14-23	25-40	2.5-4.0	1/5	Yes	Yes
3	23-31	40-55	4.0-5.5	1/3	Yes	Yes
4	31-40	55-70	5.5-7.0	1/2	Yes	Yes
5	>40	>70	>7.0	1/1	Yes	Yes

Recommended using soft water for better results. Hard water contains impurities that can reduce the washing performance. You will need to soften the water if the supplied water is harder than 1.0 mmol/L (6 °d – German scale).

- To soften the water, you need dishwasher-specific salt and configuration of the water hardness level according to your area. For more information about the water hardness level in your area, contact your local water department.
- If the hardness level of the supplied water supply is unsteady, set the dishwasher to the highest measurement. For example, if the water hardness reading ranges from 6.7 mmol/L to 9.0 mmol/L, set the dishwasher to 9.0 mmol/L.
- The dishwasher's default water hardness level is 4 (5.5-7.0 mmol/L). If this setting matches the water hardness level in your area, you do not need to change it.
- Regeneration will be operated in dry phase with an additional 2.3-2.7 L of water being used and 22-27 minutes taken for the cycle. The energy used my be increase however this should be by an insignificant amount.

FULL_DW60BB890UAPET_DD68-00254C-00_EN.indd 50 2023-03-09 6:27:45

Auto Release Dry

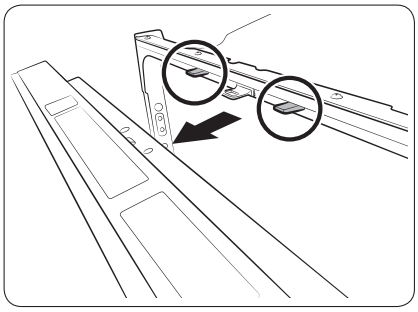

To improve drying performance, the door opens automatically in the drying process. '0' will be displayed when the current cycle is complete.

Press **Hygiene Plus** until '**A1**' or '**A0**' is displayed to enter Auto Release Dry mode. Then, press **Delay Start** to enable (A1) or disable (A0) the Auto Release Dry function.

NOTE

- Once the door opens in Auto Release Dry mode, the door cannot be closed manually for the next 2 minutes.
- Disabling Auto Release Dry mode can affect the drying results. Enable Auto Release Dry for better results.

To cancel your changes

To cancel any of the settings during the process, press **Power** to turn the dishwasher off. Then, try again.

FULL_DW60BB890UAPET_DD68-00254C-00_EN.indd 51 2023-03-09 6:27:45

Operations

Control panel (For DW60BB89* models)

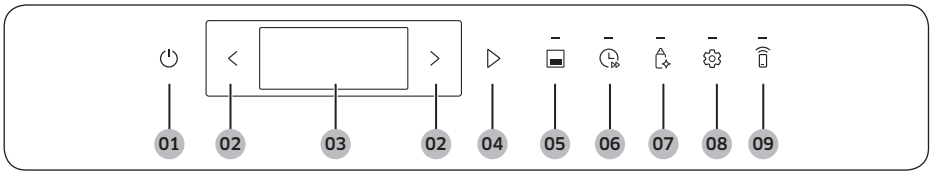

01 Power	Press to turn the dishwasher on or off.
02 Left/Right	You can search program or options by using this button.
03 Display	You can check information. • Course and option • Remained time, Delay Start, Check message
04 START	Press **START** to start operation. Make sure the door is closed. **Cancel & Drain**: To cancel the current cycle and drain the dishwasher, press and hold **START** for 3 seconds.
05 Half Load	Press to wash items using only the lower rack. This is not available with Machine Care, Baby Care and Pre wash cycles.
06 Speed Booster	Select this option to reduce the cycle time. This is available only with the Auto, ECO, Intensive, Extra silence, Pots and pans and Delicate cycles.
07 Hygiene Plus	Press to increase the water temperature up to 75 °C in the final rinse process for high temperature sanitization. This option is not available with Delicate, Express, Machine Care, Plastic, Baby Care and Pre wash.
08 Option	You can set options by using this button. • Delay Start, Dose per Rinse, Water Hardness, My Cycles, Auto Release Dry, Child Lock, AI Pattern, Sound, Language, Wi-Fi and Factory Reset.
09 Smart Control	You can check product operation remotely by using **Smart Control**.

FULL_DW60BB890UAPET_DD68-00254C-00_EN.indd 52 2023-03-09 6:27:46

Control panel (Except DW60BB89* models)

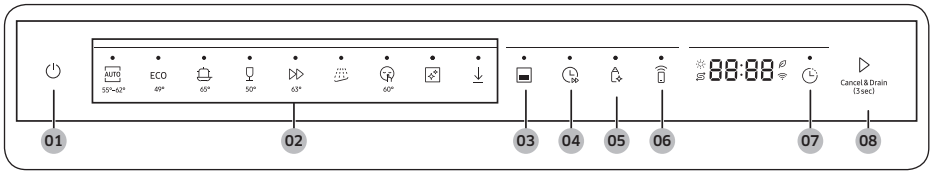

01 Power	Press to turn the dishwasher on or off.
02 Cycle	Press to select a desired wash cycle. For more information, see the "**Cycle overview**" section on page **54**.
03 Half Load	Press to wash items using only the lower rack. This is not available with Machine Care, Baby Care and Pre wash cycles.
04 Speed Booster	Select this option to reduce the cycle time. This is available only with the AUTO, ECO, Intensive, Extra Silence, Pots and Pans and Delicate cycles.
05 Hygiene Plus	Press to increase the water temperature up to 75 °C in the final rinse process for high temperature sanitization. This option is not available with Delicate, Express, Machine Care, Plastic, Baby Care and Pre wash.
06 Smart Control	You can check product operation remotely by using Smart Control.
07 Delay Start	You can delay the cycle starting time up to 24 hours. For more information, see the "**Delay Start**" section on page **46**.
08 START (Cancel & Drain)	Press **START** to start operation. Make sure the door is closed. **Cancel & Drain**: To cancel the current cycle and drain the dishwasher, press and hold **START** for 3 seconds.

FULL_DW60BB890UAPET_DD68-00254C-00_EN.indd 53 2023-03-09 6:27:46

Operations

Indicators

Rinse Refill indicator		Lights up when the dishwasher runs out of rinse aid.
Salt refill indicator		Lights up if Salt refill is activated.
AI Energy mode indicator		• AI Energy mode becomes active when the SmartThings app allows it to be enabled. • With the AI Energy mode enabled, the indicator turns on if an AI Energy mode compatible cycle is selected. • Not all cycles are available with this mode. The indicator turns off if an AI Energy mode incompatible cycle is selected. • AI Energy mode helps reduce power consumption. However, it takes a longer cycle time. * AI Energy mode will be supported on different schedule for each country from Jan 2023.
Wi-Fi indicator		Lights up if Wi-Fi is activated.

Cycle overview

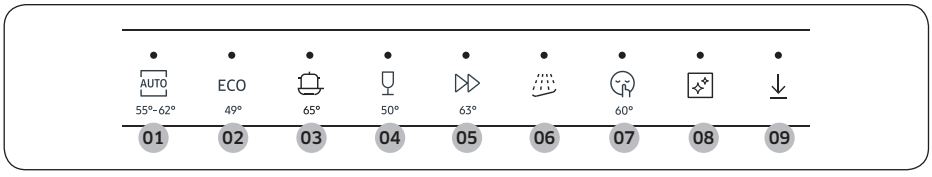

* The temperature under the buttons indicates the highest water temperature during the cycle. The highest water temperature during the cycle may differ depending on the model.

01 AUTO	This cycle detects the level of soil and automatically initiates the optimal cycle, which is appropriate for all levels of soiled items.
02 ECO*	This cycle reduces power and water consumption, which is appropriate for normally soiled items.
03 Intensive	Select this cycle for heavily soiled items.
04 Delicate	Select this cycle for lightly soiled, fragile items such as glasses. Hygiene Plus option is not available in this cycle.
05 Express	Normally soiled daily using items, with short cycle time.

FULL_DW60BB890UAPET_DD68-00254C-00_EN.indd 54 2023-03-09 6:27:46

06 Pre Wash	Cold water rinse for removing dirt before running another program.
07 Extra Silence	Select this cycle for more smooth and quiet washing. This cycle washes a little bit slower, but creates 2 decibels less noise than the ECO program.
08 Machine Care	Select this cycle to clean the inside of the dishwasher. Make sure the dishwasher is empty.
09 Download Course (Applicable models only)	Based on the Plastic course, you can download the following additional courses: • Plastic, Baby Care, and Pots and Pans courses

* The values for the ECO program have been obtained following the test standard EN 60436:2020. The values given for the other programs are indicative only.

Download Course (Applicable models only)

You can download and use courses other than those provided by default through your phone. Some models have already courses built in by default. No additional download is necessary.

1. Press the **Power** button.
2. Select **Download Course**.
3. Select the downloadable course you want to use in your phone app.
   Pots and Pans, Plastic, and Baby Care courses are available.
   - When you download using the phone app, you can keep using your saved courses.
4. Press the **START** button and close the dishwasher door.

Pots and Pans	Choose to wash pots and pans. This course uses hotter water and higher pressure than a standard course for focused cleaning of pot and pans.
Plastic	This course is used when washing plastic dishes. It washes plastic at a safer temperature (60 °C) and dries them better.
Baby Care	Suitable for rinsing/drying dishes at a high temperature of 75 °C. This cycle is not designed for detergent or rinse. Do not use any of them.

FULL_DW60BB890UAPET_DD68-00254C-00_EN.indd 55 2023-03-09 6:27:46

Operations

Simple steps to start

1. Open the door, and then load the dishwasher. Make sure to remove food remains and waste on the dishes.
2. Apply detergent to the detergent dispenser. For better results, add rinse aids.
3. Press **Power**, and then select a cycle with necessary options (**Half Load**, **Speed Booster**, **Hygiene Plus**, and **Delay Start**). Some options may not be available depends on the cycle.
4. Press **START**, and then close the door. The dishwasher starts the cycle after draining for a few seconds.

NOTE

- To change the cycle after it has started, press and hold **START** for 3 seconds to cancel the cycle. Then, select a new cycle.
- The default cycle is ECO.
- To resume after you have opened the door to stop the dishwasher while operating, simply close the door.

FULL_DW60BB890UAPET_DD68-00254C-00_EN.indd 56 2023-03-09 6:27:47

Maintenance

Cleaning

Keep the dishwasher clean to improve performance, reduce unnecessary repairs, and lengthen the lifecycle.

Exterior

Clean spills on the surface of the dishwasher immediately. Use a soft, damp cloth on the control panel to gently wipe away spills and dust.

⚠ **CAUTION**

- Do not use benzene, wax, thinner, chlorine bleach, alcohol, or other chemical substances. These materials may discolour the surface of the dishwasher and cause stains.
- The dishwasher has electric parts inside. Do not spray water directly onto the dishwasher. Protect electrical components from water.
- For a stainless-steel door panel, use a stainless steel cleaner for home appliances and a clean, soft cloth.

Interior

Clean the interior of the dishwasher on a regular basis to remove any dirt or food particles. Wipe inside the dishwasher and inside the door with a wet dishcloth.

⚠ **CAUTION**

- Do not remove the front seal (the long rubber seal enclosing the opening of the dishwasher). The seal keeps the inner side of the dishwasher sealed.
- Use a damp cloth to remove lime scale or grease deposits inside the dishwasher. Alternatively, apply some detergent, and then run an empty cycle using the highest rinse temperature.

Nozzles

To prevent the nozzles from being clogged or if the nozzles are clogged, remove and clean each nozzle. Use caution when removing the nozzles as they may break.

Top nozzle

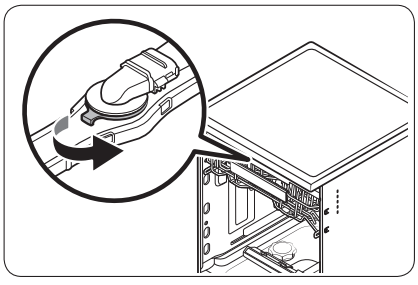

1. Open the door, and then pull out the upper rack. The top nozzle is visible on the top.
2. Turn counter clockwise and remove the nozzle cap, and then remove the nozzle.
3. Unclog and clean the nozzle.
4. Reinsert the nozzle, and then tighten the cap clockwise.
5. Rotate the nozzle by hand to make sure the nozzle is engaged correctly.

FULL_DW60BB890UAPET_DD68-00254C-00_EN.indd 57 2023-03-09 6:27:47

Maintenance

Upper nozzle

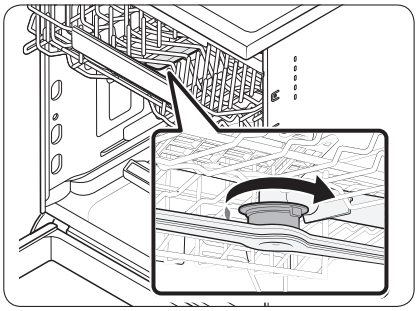

1. Open the door, and then pull out the upper rack to reveal the upper nozzle.
2. Loosen and remove the nut, and then remove the nozzle.
3. Unclog and clean the nozzle.
4. Reinsert the nozzle, and then tighten the nut by hand.
5. Rotate the nozzle by hand to make sure the nozzle is engaged correctly.

Lower nozzle

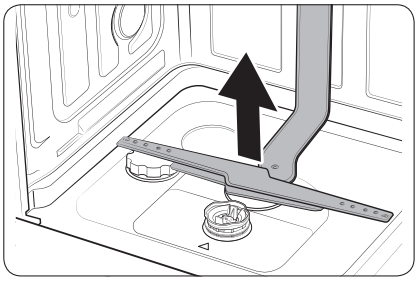

1. Open the door, and then pull out the lower rack. The lower nozzle is visible on the bottom.
2. Unclog and clean the nozzle.
3. Reinsert the nozzle.
4. Rotate the nozzle by hand to make sure the nozzle is engaged correctly.

Internal Cleaning

Recommended internal cleaning every month. You can use the Machine Care cycle or the Intensive cycle without putting in dishes.

If your tap water is hard, you can prevent limescale inside the dishwasher by adding citric acid to the detergent when operating the dishwasher.

FULL_DW60BB890UAPET_DD68-00254C-00_EN.indd 58 2023-03-09 6:27:47

Filter

Recommended cleaning the filter every month.

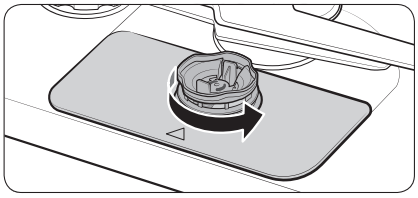

1. Open the door, and then remove the lower rack first.
2. Turn the filter handle counterclockwise to unlock the Coarse filter.

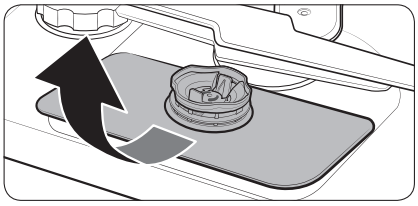

3. Remove the Coarse filter, and then the cylindrical micro filter underneath.

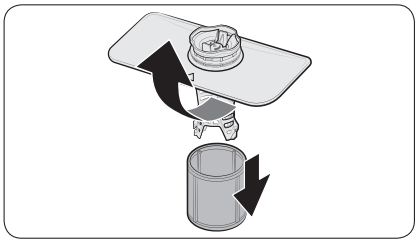

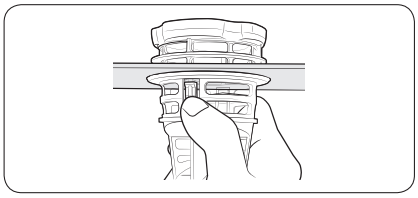

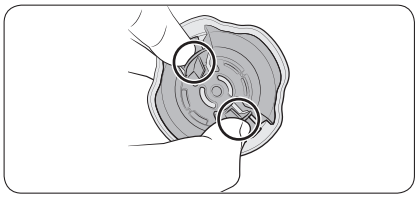

FULL_DW60BB890UAPET_DD68-00254C-00_EN.indd 59 2023-03-09 6:27:48

Maintenance

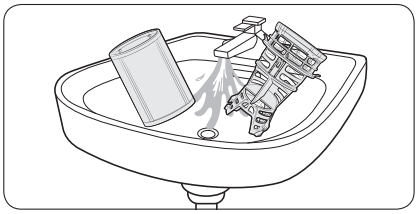

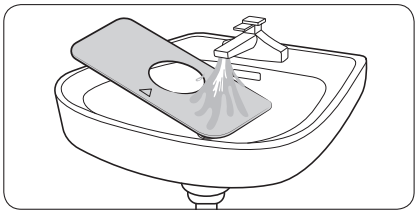

4. Remove any dirt and impurities from the micro filter and the Coarse filter.
5. Rinse both filters with running water, and then dry well.

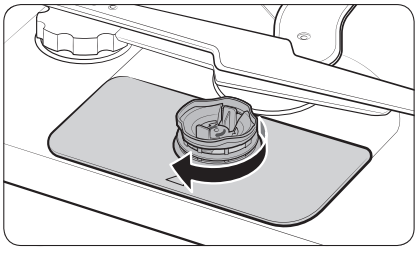

6. Reinsert the filter, and then the Coarse filter.
7. Turn the filter handle clockwise to lock.

⚠ CAUTION

Make sure the Coarse filter is closed properly. A loose cover can reduce the filtering performance.

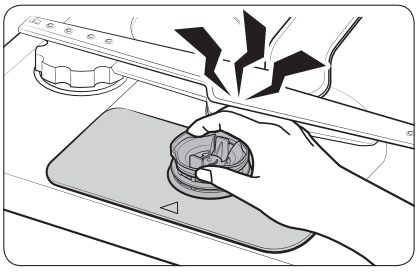

⚠ CAUTION

When removing the filter, the hand can caught between the rotor and filter.

FULL_DW60BB890UAPET_DD68-00254C-00_EN.indd 60 2023-03-09 6:27:48

Cleaning the drain pump

If the dishwasher fails to drain (5C is displayed) because the drain pump is clogged with a foreign matter or there is an abnormal noise coming from the drain pump, you must unclog and clean the drain pump as instructed below.

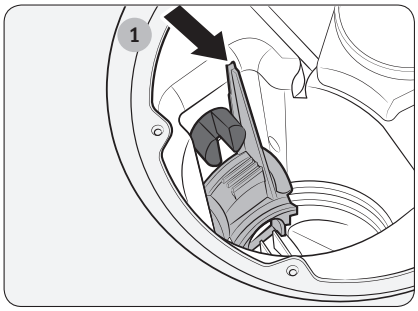

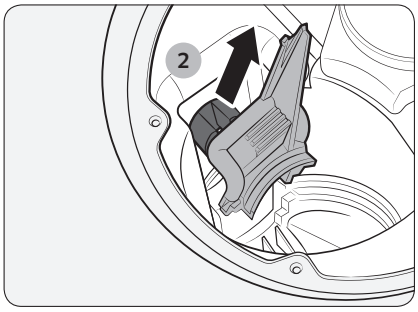

1. Remove the lower rack.
2. See the "Filter" section to remove the cylindrical micro filter.
3. Remove any moisture from the filter using a sponge.
4. Remove the drain-pump cover by pushing its handle in the direction of the arrow (1), and then pulling up (2).
5. Check the impeller to see if it's in good condition. Then, remove any foreign matter from the pump.
6. Reinsert the drain-pump cover and then press down until you hear a click.

Long-term care

If you will not use the dishwasher for an extended period of time, first drain the unit completely, and then disconnect the water hose. Shut off the water supply valve and the circuit breaker. Water remaining in the hoses or the internal components can damage the dishwasher.

FULL_DW60BB890UAPET_DD68-00254C-00_EN.indd 61 2023-03-09 6:27:48

Troubleshooting

Checkpoints

If you encounter an issue with the dishwasher, first check the table below and try the suggestions.

Following the repair by a non-authorized service provider, self-repair or non-professional repair of the product, Samsung is not liable for any damage to the product, any injury or any other product safety issue caused by any attempt to repair the product which does not carefully follow these repair and maintenance instructions. Any damage to the product caused by an attempt to repair the product by any person other than a Samsung certified service provider will not be covered by the warranty.

Symptom	Possible cause	Action
The dishwasher does not start.	The door is not completely closed.	• Make sure the door is latched and completely closed. • Make sure the upper rack is properly joined with the nozzle. • Make sure the upper rack is properly assembled.
	The power cord is not connected.	• Connect the power cord.
	Water is not being supplied.	• Make sure the water supply valve is open.
	The control panel is locked.	• Deactivate the Child Lock.
The dishwasher has bad odours.	Water remains from the previous cycle.	• With the dishwasher empty, add detergent, and then run the Express cycle. This is available only on applicable models.
Water remains in the dishwasher after a cycle has finished.	The drain hose is folded or clogged.	• Straighten and unclog the hose.

FULL_DW60BB890UAPET_DD68-00254C-00_EN.indd 62 2023-03-09 6:27:48

Symptom	Possible cause	Action
Food remains on dishes.	An incorrect cycle was selected.	• Select a cycle according to the soil level of the dishes as instructed in this manual.
	The filters are clogged or not correctly fastened.	• Clean the filters. • Make sure the filters are correctly fastened.
	An insufficient amount of detergent was used.	• Use the correct amount of detergent for each load.
	The water pressure is low.	• Make sure the pressure is between 0.05-0.8 Mpa.
	The nozzles are clogged.	• Clean and unclog the nozzles.
	Dishes improperly loaded or overloaded.	• Arrange the dishes so they do not interfere with the nozzles or the detergent dispenser.
	The water is too hard.	• Check the salt refill indicator, and refill with dishwasher salt.
Dishes are not dried well.	There is no rinse aid in the dispenser, or not enough rinse aid was used.	• Add rinse aid. • Check the Dose per Rinse settings.
	Too many dishes are loaded.	• Overloading may reduce the drying performance. Load your dishes as recommended.
	Glasses and cups spilled water onto other dishes while being unloaded.	• Empty the lower rack first, and then the upper rack. This will avoid water dripping from the upper rack onto the dishes in the lower rack.
	Multiple detergent tablets were used without selecting the Hygiene Plus option.	• Select the Hygiene Plus option or use rinse aid.

FULL_DW60BB890UAPET_DD68-00254C-00_EN.indd 63 2023-03-09 6:27:48

Troubleshooting

Symptom	Possible cause	Action
The dishwasher is too noisy.	The dishwasher makes a sound when the dispenser cover is open and the drain pump is operating.	• This is normal.
	The dishwasher is not level.	• Make sure the dishwasher is level.
	The nozzle bumps against the dishes, creating a chopping sound.	• Rearrange the dishes.
Yellow or brown film remains on dishes.	Coffee and tea soils.	• Use a cycle with a higher temperature.
Indicators do not light up.	The power cord is not connected.	• Check power supply is present.
The nozzles do not rotate smoothly.	The nozzles are clogged with food particles.	• Clean the nozzles.
A white coating remains on dishes.	The water is too hard.	• Make sure the salt fill indicator and softener settings are correct according to the water hardness of your area. • Make sure the salt storage cap is correctly fastened.
Air bubbles and scratch marks are on the control panel.	Air gets into the protective film, causing EPS marks to remain.	• Remove the protective film from the control panel.
The dishwasher bubbles up and the foam remains too much on the front.	This may occur: • If using generic kitchen detergent. • If loading a dish that generic kitchen detergent has been applied to. • If inputting more than required water.	• Turn the dishwasher off and remove the bubbles. • If the dishwasher bubbles up severely, wait until the foam subsides. Then, run the **Cancel & Drain** cycle followed by the prewash process 2-3 times.

FULL_DW60BB890UAPET_DD68-00254C-00_EN.indd 64 2023-03-09 6:27:48

Information codes

If the dishwasher fails to operate, you may see an information code on the display. Check the table below and try the suggestions.

Code	Action
LC	Leakage check • Close the water supply valve. Go to your home's circuit breaker panel, and set the dishwasher's circuit breaker switch to off. Contact the installer to repair. If the issue continues, contact a local Samsung service center.
4C	Water supply check • Check if the water supply valve is closed, if the water supply is suspended, or if the water inlet valve or line is frozen or clogged by foreign particles. If the issue continues, contact a local Samsung service center.
AC	PCB communication check • Abnormal communication between the main PCB and the sub PCB. • If the problem continues, contact an authorised Samsung service center.
HC	High temperature heating check • Functional check. With the dishwasher empty, add detergent, and then run a cycle. If the issue continues, go to your home's circuit breaker panel, and set the dishwasher's circuit breaker switch to off. Contact a Samsung service center.
3C	Washing pump check • Abnormal working with washing pump. If the issue continues, contact a local Samsung service center.
1C	Low-water level check • Check if the filter is clogged. • Make sure to use dishwasher detergent. • Make sure that the dishes are loaded evenly. • Turn the dishwasher off and turn it on again. Then, try again. • If the problem continues, contact a local Samsung service center.
5C	Drain pump check • Check drain pump and drain pipe. If it is jammed, clean it. If the issue continues, contact a local Samsung service center.

If any information code keeps appearing on the screen, contact a local Samsung service centre.

Spare parts* for end-users are available for a minimum of 10 years**.

* Applicable parts : door hinge and seals, other seals, spray arms, drain filters, interior racks and plastic peripherals such as baskets and lids.

** This means a minimum of 10 years after Samsung places the last unit of the model on the market.

FULL_DW60BB890UAPET_DD68-00254C-00_EN.indd 65 2023-03-09 6:27:48

Cycle chart

DW60B*8***** model

Cycle	AUTO	AUTO (DW60*G850U**)	ECO
Cycle sequence	Pre wash (45 ℃) ▶ Main wash (55-60 ℃) ▶ Rinse ▶ Hot Rinse (53-58 ℃) ▶ Dry ▶ End	Pre wash ▶ Main wash (50-62 ℃) ▶ Rinse ▶ Hot Rinse (58-61 ℃) ▶ Dry ▶ End	Main wash (49 ℃) ▶ Rinse ▶ Hot Rinse (43 ℃) ▶ Dry ▶ End
Water consumption (L)	10.9-13.6	8.2-9.9	8
Energy consumption (kWh)	0.85-1.25	0.80-1.15	0.644
Cycle time (min.)	108-155	84-150	235

Cycle	Intensive	Delicate	Express
Cycle sequence	Pre wash (45 ℃) ▶ Main wash (65 ℃) ▶ Rinse ▶ Hot Rinse (63 ℃) ▶ Dry ▶ End	Pre wash (40 ℃) ▶ Main wash (50 ℃) ▶ Rinse ▶ Hot Rinse (50 ℃) ▶ Dry ▶ End	Main wash (63 ℃) ▶ Rinse ▶ Hot Rinse (57 ℃) ▶ Dry ▶ End
Water consumption (L)	14.15	10.35	9.8
Energy consumption (kWh)	1.45	0.8	1.05
Cycle time (min.)	180	117	78

Cycle	Pre Wash	Machine Care	Extra Silence
Cycle sequence	Pre wash ▶ End	Pre wash ▶ Main wash (70 ℃) ▶ Rinse ▶ Hot Rinse (70 ℃) ▶ Dry ▶ End	Pre wash ▶ Main wash (60 ℃) ▶ Rinse ▶ Hot Rinse (55 ℃) ▶ Dry ▶ End
Water consumption (L)	4	12.9	12
Energy consumption (kWh)	0.05	1.4	1.1
Cycle time (min.)	24	136	263

FULL_DW60BB890UAPET_DD68-00254C-00_EN.indd 66 2023-03-09 6:27:49

DW60B*7***** model

Cycle	AUTO	AUTO (DW60*G750S**) (DW60*G750U**)	ECO
Cycle sequence	Pre wash (45 °C) ▶ Main wash (55-60 °C) ▶ Rinse ▶ Hot Rinse (53-58 °C) ▶ Dry ▶ End	Pre wash ▶ Main wash (50-62 °C) ▶ Rinse ▶ Hot Rinse (58-61 °C) ▶ Dry ▶ End	Main wash (49 °C) ▶ Rinse ▶ Hot Rinse (47 °C) ▶ Dry ▶ End
Water consumption (L)	12.5-15.2	9.8-11.5	9.2
Energy consumption (kWh)	0.88–1.28	0.83-1.18	0.746 (14 place setting) 0.735 (13 place setting)
Cycle time (min.)	104-151	77-143	255

Cycle	Intensive	Delicate	Express
Cycle sequence	Pre wash (45 °C) ▶ Main wash (65 °C) ▶ Rinse ▶ Hot Rinse (63 °C) ▶ Dry ▶ End	Pre wash (40 °C) ▶ Main wash (50 °C) ▶ Rinse ▶ Hot Rinse (50 °C) ▶ Dry ▶ End	Main wash (63 °C) ▶ Rinse ▶ Hot Rinse (57 °C) ▶ Dry ▶ End
Water consumption (L)	15.75	11.95	9.8
Energy consumption (kWh)	1.48	0.83	1.05
Cycle time (min.)	176	113	78

FULL_DW60BB890UAPET_DD68-00254C-00_EN.indd 67 2023-03-09 6:27:49

Cycle chart

Cycle	Pre Wash	Machine Care	Extra Silence
Cycle sequence	Pre wash ▶ End	Pre wash ▶ Main wash (70 ˚C) ▶ Rinse ▶ Hot Rinse (70 ˚C) ▶ Dry ▶ End	Pre wash ▶ Main wash (60 ˚C) ▶ Rinse ▶ Hot Rinse (55 ˚C) ▶ Dry ▶ End
Water consumption (L)	4	12.9	13.6
Energy consumption (kWh)	0.05	1.4	1.13
Cycle time (min.)	24	136	259

DW60B*8***** model

Cycle	Download Cycle		
	Plastic	Baby Care	Pots and Pans
Cycle sequence	Main wash (60 ˚C) ▶ Rinse ▶ Hot Rinse (60 ˚C) ▶ Dry ▶ End	Hot Rinse (75 ˚C) ▶ Dry ▶ End	Pre wash ▶ Main wash (68 ˚C) ▶ Rinse ▶ Hot Rinse (68 ˚C) ▶ Dry ▶ End
Water consumption (L)	11.3	4.5	13.9
Energy consumption (kWh)	1.1	1	1.5
Cycle time (min.)	97	68	151

FULL_DW60BB890UAPET_DD68-00254C-00_EN.indd 68 2023-03-09 6:27:49

DW60B*7***** model

Cycle	Download Cycle		
	Plastic	Baby Care	Pots and Pans
Cycle sequence	Main wash (60 °C) ▶ Rinse ▶ Hot Rinse (60 °C) ▶ Dry ▶ End	Hot Rinse (75 °C) ▶ Dry ▶ End	Pre wash ▶ Main wash (68 °C) ▶ Rinse ▶ Hot Rinse (68 °C) ▶ Dry ▶ End
Water consumption (L)	12.9	4.5	15.5
Energy consumption (kWh)	1.13	1	1.53
Cycle time (min.)	93	68	147

* Pre Wash: This cycle does not activate the Auto Release Dry function nor the drying process.
Continuous use of the Pre Wash cycle for an extended time is not recommended. This may reduce the performance of the water softener.

NOTE

- The cycle time depends on the options you have added, and the pressure and temperature of the supplied water.
- The dishwasher drains the remaining water inside automatically if it has not been used for the last 5 days.
- The power consumption depends on the water temperature or load.
- Energy values for courses were calculated under standardized testing conditions.

FULL_DW60BB890UAPET_DD68-00254C-00_EN.indd 69 2023-03-09 6:27:49

Appendix

Transportation/relocation

Make sure the dishwasher is empty with no loose parts. First, drain the dishwasher as follows.

1. Open the door, and then turn the dishwasher on.
2. Select and run the **ECO** cycle.
3. Press **START**, and then close the door.
4. When the cycle is finished, open the door after 5 seconds.
5. Press and hold **START** for 3 seconds to drain water.
6. Close the door.
7. When the draining process is complete, open the door.
8. Turn the dishwasher off, and then shut the water valve off.
9. Disconnect the both the water hose and the drain hose.

⚠ **CAUTION**

Do not shake or sway the dishwasher while moving it. Residual water may drip from the dishwasher.

Protection against frost

If you leave the dishwasher in a place with a risk of frost for an extended time, make sure to empty the dishwasher. For details, see the "**Transportation/relocation**" section.

Disposing the dishwasher and helping the environment

Your dishwasher is manufactured from recyclable materials. If you decide to dispose of it, please observe your local waste disposal regulations. Cut off the power cord so that the appliance cannot be connected to a power source.

Remove the door so that animals and children cannot get trapped inside the appliance.

FULL_DW60BB890UAPET_DD68-00254C-00_EN.indd 70 2023-03-09 6:27:49

Energy, water saving tip

- ECO programme is suitable to clean normally soiled tableware, that for this use, it is the most efficient programme in terms of its combined energy and water consumption, and that it is used to assess compliance with the EU ecodesign legislation (COMMISSION REGULATION (EU) 2019/2022).
- Manual pre-rinsing of tableware items leads to increased water and energy consumption and is not recommended.
  Use a knife, etc. to remove only large bits of food before loading.
- Water supplied can be up to 60 °C, and less power is consumed when hot water is connected.
- It's better to fill the basket if possible but without overloading.
- Load the tableware to the baskets properly to prevent damages and poor performance.
  - Overloading and overlapping tableware may reduce the cleaning and drying performance.
    Load your tableware as recommended.
  - Load the tableware with concave bottom at an angle so that water can run off.
  - Arrange the tableware so they do not interfere with the nozzles and the detergent dispenser.
    It can make the cleaning and drying performance better, and prevent the noise of nozzle bumping the tableware.
  - To prevent injury from the knives and other utensils with sharp points, it must be loaded in the basket with their points down or placed in a horizontal position.
- To save water and energy, use the **ECO** cycle. **ECO** is the most efficient program when washing normally soiled items.
- Use an appropriate amount of detergent and rinse according to the manufacturer's guidelines.
- Dishwasher use saves water compared to ordinary washing by hand.
- Ecodesign information can be found by going to www.samsung.com/support.

EPREL information

To access energy labelling information about this product on the European Product Registry for Energy Labelling (EPREL), go to https://eprel.ec.europa.eu/qr/****** where ****** is the product's EPREL registration number. You can find the registration number on the rating label of your product.

FULL_DW60BB890UAPET_DD68-00254C-00_EN.indd 71 2023-03-09 6:27:49

Appendix

Specifications

MODEL		DW60BG850B** DW60BG750B** DW60BG730B**	DW60BG850I** DW60BG830I**	DW60BG750S**
Type		Fully Built-in	Fully Built-in (Sliding)	Semi Built-in
Power		220-240 V~, 50 Hz		
Water pressure		0.05-0.8 MPa		
Wash capacity	DW60BB890**	14 Place settings		
	DW60BG850**	14 Place settings		
	DW60BG830**	14 Place settings		
	DW60BG750**	14 Place settings		
	DW60BG730**	13 Place settings		
Rated power		2000-2300 W		
Dimension (Width x Depth x Height)		595x552x815 mm	595x552x815 mm	595x572x815 mm
Weight (Unpacked)		42.0 kg (DW60BG8*****) 40.5 kg (DW60BG7*****)	42.0 kg	42.0 kg
Weight (Packed)		45.5 kg (DW60BG8*****) 44.0 kg (DW60BG7*****)	47.0 kg	45.0 kg

MODEL		DW60BG850U** DW60BG830U** DW60BG750U**	DW60BB890U**	DW60BG850F** DW60BG830F** DW60BG750F** DW60BG730F**
Type		Built Under	Built Under (Bespoke)	Free Standing
Power		220-240 V~, 50 Hz		
Water pressure		0.05-0.8 MPa		
Wash capacity	DW60BB890**	14 Place settings		
	DW60BG850**	14 Place settings		
	DW60BG830**	14 Place settings		
	DW60BG750**	14 Place settings		
	DW60BG730**	13 Place settings		
Rated power		2000-2300 W		
Dimension (Width x Depth x Height)		595x572x815 mm	595x572x815 mm	598x600x845 mm
Weight (Unpacked)		42.5 kg (DW60BG8*****) 41.0 kg (DW60BG7*****)	42.5 kg	56.0 kg (DW60BG8*****) 54.5 kg (DW60BG7*****)
Weight (Packed)		46.0 kg (DW60BG8*****) 44.5 kg (DW60BG7*****)	46.0 kg	60.0 kg (DW60BG8*****) 58.5 kg (DW60BG7*****)

FULL_DW60BB890UAPET_DD68-00254C-00_EN.indd 72 2023-03-09 6:27:49

For standard test

NOTE

The information for comparability test as follows.

DW60B*8***** / DW60B*75**** models

- Washing capacity: 14 place settings
- Test standard: EN 60436
- Position of upper rack: lower position
- Position of cutlery rack : lower position (Applicable models only)
- Wash cycle: ECO
- Additional options: None
- Rinse aid level setting: F6
- Water hardness level setting: L2
- Dosage of the standard detergent: main-wash 22 g
- For the arrangement of the items, refer to the below figures

Upper rack

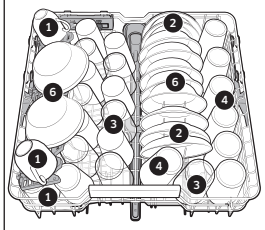

Lower rack

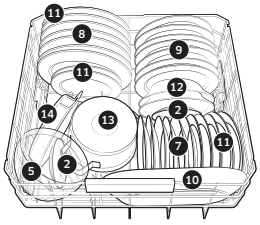

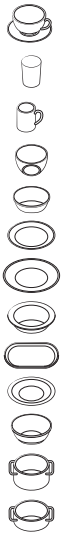

1. Cups
2. Saucers
3. Glasses
4. Mug cups
5. Glass bowls
6. Dessert bowls
7. Dessert plates
8. Dinner plates
9. Soup plates
10. Oval platter
11. Melamine dessert
12. Melamine bowl
13. Small pot
14. Oven pot

Cutlery rack

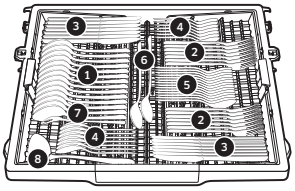

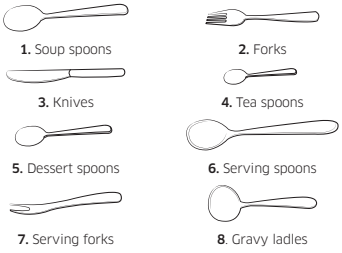

1. Soup spoons
2. Forks
3. Knives
4. Tea spoons
5. Dessert spoons
6. Serving spoons
7. Serving forks
8. Gravy ladles

FULL_DW60BB890UAPET_DD68-00254C-00_EN.indd 73 2023-03-09 6:27:51

For standard test

DW60B*73** models**

- Washing capacity: 13 place settings
- Test standard: EN 60436
- Position of upper rack: upper position
- Wash cycle: ECO
- Additional options: None
- Rinse aid level setting: F6
- Water hardness level setting: L2
- Dosage of the standard detergent: main-wash 21 g
- For the arrangement of the items, refer below figures

Upper rack

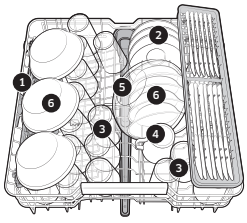

Lower rack

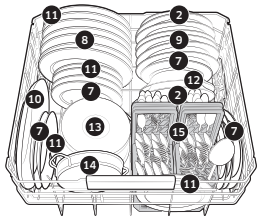

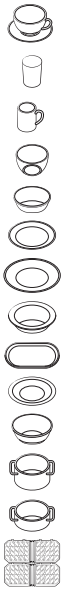

1. Cups
2. Saucers
3. Glasses
4. Mug cups
5. Glass bowls
6. Dessert bowls
7. Dessert plates
8. Dinner plates
9. Soup plates
10. Oval platter
11. Melamine dessert
12. Melamine bowl
13. Small pot
14. Oven pot
15. Cutlery basket

Cutlery rack

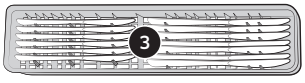

Cutlery basket

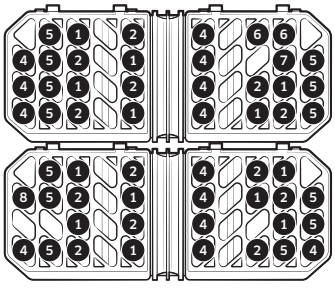

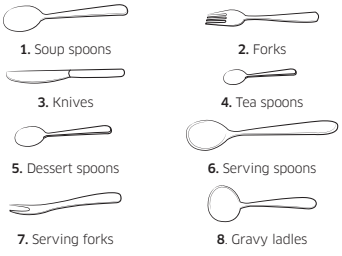

1. Soup spoons
2. Forks
3. Knives
4. Tea spoons
5. Dessert spoons
6. Serving spoons
7. Serving forks
8. Gravy ladles

FULL_DW60BB890UAPET_DD68-00254C-00_EN.indd 74 2023-03-09 6:27:53

Memo

SAMSUNG

QUESTIONS OR COMMENTS?

COUNTRY	CALL	OR VISIT US ONLINE AT
AUSTRIA	0800 72 67 864 (0800-SAMSUNG)	www.samsung.com/at/support
BELGIUM	02-201-24-18	www.samsung.com/be/support (Dutch) www.samsung.com/be_fr/support (French)
DENMARK	707 019 70	www.samsung.com/dk/support
FINLAND	030-6227 515	www.samsung.com/fi/support
FRANCE	01 48 63 00 00	www.samsung.com/fr/support
GERMANY	06196 77 555 77	www.samsung.com/de/support
ITALIA	800-SAMSUNG (800.7267864)	www.samsung.com/it/support
CYPRUS	8009 4000 only from landline, toll free	www.samsung.com/gr/support
GREECE	80111-SAMSUNG (80111 726 7864) only from land line (+30) 210 6897691 from mobile and land line	www.samsung.com/gr/support
LUXEMBURG	261 03 710	www.samsung.com/be_fr/support
NETHERLANDS	088 90 90 100	www.samsung.com/nl/support
NORWAY	21629099	www.samsung.com/no/support
PORTUGAL	210 608 098 Chamada para a rede fixa nacional Dias úteis das 9h às 20h	www.samsung.com/pt/support
SPAIN	91 175 00 15	www.samsung.com/es/support
SWEDEN	0771-400 300	www.samsung.com/se/support
SWITZERLAND	0800 726 786	www.samsung.com/ch/support (German) www.samsung.com/ch_fr/support (French)
UK	0333 000 0333	www.samsung.com/uk/support
IRELAND (EIRE)	0818 717100	www.samsung.com/ie/support
POLAND	801-172-678* * (opłata według taryfy operatora)	http://www.samsung.com/pl/support/





DD68-00254C-00