Electrolux

electrolux.com/register

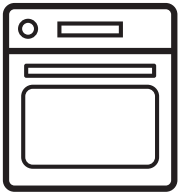

**EN** User Manual | **Oven**

**EOF5H40BX**

# INSTALLATION

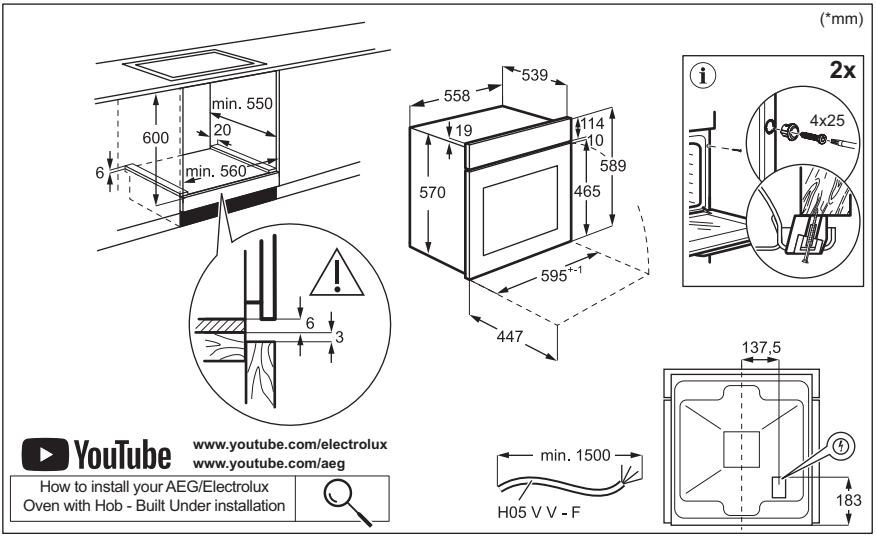


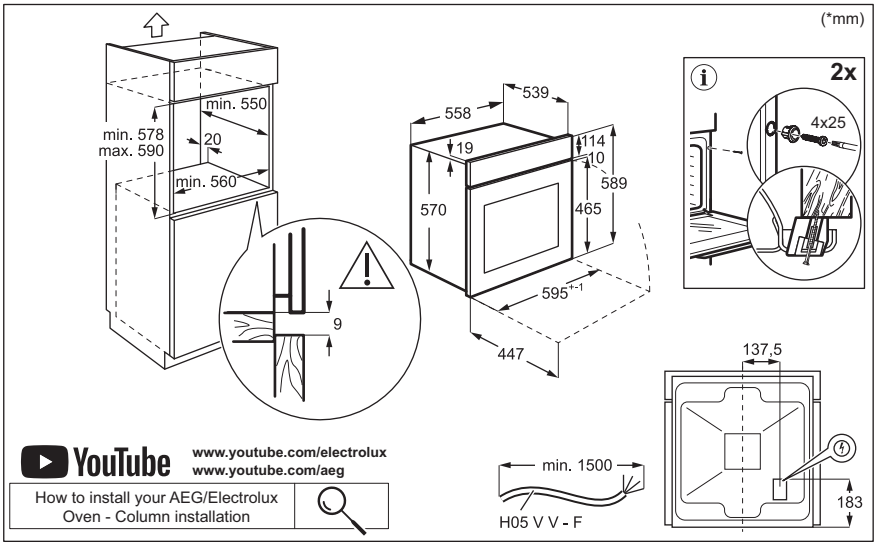

**Welcome to Electrolux! Thank you for choosing our appliance.**

Get usage advice, brochures, troubleshooting, service and repair information:
**www.electrolux.com/support**

Subject to change without notice.

## CONTENTS


**1.** SAFETY INFORMATION....3
**2.** SAFETY INSTRUCTIONS....5
**3.** PRODUCT DESCRIPTION....7
**4.** CONTROL PANEL....7
**5.** BEFORE FIRST USE....8
**6.** DAILY USE....8
**7.** ADDITIONAL FUNCTIONS....9
**8.** CLOCK FUNCTIONS....9
**9.** USING THE ACCESSORIES....10
**10.** HINTS AND TIPS....10
**11.** CARE AND CLEANING....12
**12.** TROUBLESHOOTING....14
**13.** ENERGY EFFICIENCY....15
**14.** ENVIRONMENTAL CONCERNS....16


# 1. ⚠ SAFETY INFORMATION

Before the installation and use of the appliance, carefully read the supplied instructions. The manufacturer is not responsible for any injuries or damage that are the result of incorrect installation or usage. Always keep the instructions in a safe and accessible location for future reference.

## 1.1 Children and vulnerable people safety

- This appliance can be used by children aged from 8 years and above and persons with reduced physical, sensory or mental capabilities or lack of experience and knowledge if they have been given supervision or instruction concerning the use of the appliance in a safe way and understand the hazards involved. Children of less than 8 years of age and persons with very extensive and complex disabilities shall be kept away from the appliance unless continuously supervised.

- Children should be supervised to ensure that they do not play with the appliance.
- Keep all packaging away from children and dispose of it appropriately.
- WARNING: The appliance and its accessible parts become hot during use. Keep children and pets away from the appliance when in use and when cooling down.
- If the appliance has a child safety device, it should be activated.
- Children shall not carry out cleaning and user maintenance of the appliance without supervision.

## 1.2 General Safety

- This appliance is for cooking purposes only.
- This appliance is designed for single household domestic use in an indoor environment.
- This appliance may be used in offices, hotel guest rooms, bed & breakfast guest rooms, farm guest houses and other similar accommodation where such use does not exceed (average) domestic usage levels.
- Only a qualified person must install this appliance and replace the cable.
- Do not use the appliance before installing it in the built-in structure.
- Disconnect the appliance from the power supply before carrying out any maintenance.
- If the supply cord is damaged, it must be replaced by the manufacturer, its Authorised Service Centre or similarly qualified persons to avoid an electrical hazard.
- WARNING: Ensure that the appliance is switched off before replacing the lamp to avoid the possibility of electric shock.
- WARNING: The appliance and its accessible parts become hot during use. Care should be taken to avoid touching heating elements or the surface of the appliance cavity.
- Always use oven gloves to remove or insert accessories or ovenware.

- To remove the shelf supports first pull the front of the shelf support and then the rear end away from the side walls. Install the shelf supports in the opposite sequence.
- Do not use a steam cleaner to clean the appliance.
- Do not use harsh abrasive cleaners or sharp metal scrapers to clean the glass door since they can scratch the surface, which may result in shattering of the glass.

## **2.** SAFETY INSTRUCTIONS

### 2.1 Installation

**⚠ WARNING!**

Only a qualified person must install this appliance.

- Remove all the packaging.
- Do not install or use a damaged appliance.
- Follow the installation instructions available on our website.
- Always take care when moving the appliance as it is heavy. Always use safety gloves and enclosed footwear.
- Do not pull the appliance by the handle.
- Install the appliance in a safe and suitable place that meets installation requirements.
- Keep the minimum distance from other appliances and units.
- Before mounting the appliance, check if the appliance door opens without restraint.
- The appliance is equipped with an electric cooling system. It must be operated with the electric power supply.

### 2.2 Electrical connection

**⚠ WARNING!**

Risk of fire and electric shock.

- All electrical connections should be made by a qualified electrician.
- The appliance must be earthed.
- Make sure that the parameters on the rating plate are compatible with the electrical ratings of the mains power supply.
- Always use a correctly installed shockproof socket.
- Do not use multi-plug adapters and extension cables.
- Make sure not to cause damage to the mains plug and to the mains cable. Should the mains cable need to be replaced, this must be carried out by our Authorised Service Centre.
- Do not let mains cables touch or come near the appliance door or the niche below the appliance, especially when it operates or the door is hot.
- The shock protection of live and insulated parts must be fastened in such a way that it cannot be removed without tools.
- Connect the mains plug to the mains socket only at the end of the installation. Make sure that there is access to the mains plug after the installation.
- If the mains socket is loose, do not connect the mains plug.
- Do not pull the mains cable to disconnect the appliance. Always pull the mains plug.
- Use only correct isolation devices: line protecting cut-outs, fuses (screw type fuses removed from the holder), earth leakage trips and contactors.
- The electrical installation must have an isolation device which lets you disconnect the appliance from the mains at all poles. The isolation device must have a contact opening width of minimum 3 mm.
- This appliance is supplied with a main plug and a main cable.

| **Cable types applicable for installation or replacement for Europe:** |
|---|
| H07 RN-F, H05 RN-F, H05 RRF, H05 VV-F, H05 V2V2-F (T90), H05 BB-F |

For the section of the cable refer to the total power on the rating plate. You can also refer to the table:

| Total power (W) | Section of the cable (mm²) |
|---|---|
| maximum 1380 | 3x0.75 |
| maximum 2300 | 3x1 |
| maximum 3680 | 3x1.5 |

The earth cord (green / yellow cable) must be 2 cm longer than the brown phase and blue neutral cables.

## 2.3 Use

**⚠ WARNING!**

Risk of injury, burns and electric shock or explosion.

- Do not change the specification of this appliance.
- Make sure that the ventilation openings are not blocked.
- Do not let the appliance stay unattended during operation.
- Deactivate the appliance after each use.
- Be careful when you open the appliance door while the appliance is in operation. Hot air can release.
- Do not operate the appliance with wet hands or when it has contact with water.
- Do not apply pressure on the open door.
- Do not use the appliance as a work surface or as a storage surface.
- Open the appliance door carefully. The use of ingredients with alcohol can cause a mixture of alcohol and air.
- Do not let sparks or open flames to come in contact with the appliance when you open the door.
- Always use glass and jars approved for preserving purposes.
- Do not put flammable products or items that are wet with flammable products in, near or on the appliance.

**⚠ WARNING!**

Risk of damage to the appliance.

- To prevent damage or discoloration to the enamel:
  - do not put ovenware or other objects in the appliance directly on the bottom.
  - do not put aluminium foil directly on the bottom of cavity of the appliance.
  - do not put water directly into the hot appliance.
  - do not keep moist dishes and food in the appliance after you finish the cooking.
  - be careful when you remove or install the accessories.
- Discoloration of the enamel or stainless steel has no effect on the performance of the appliance.
- Use a deep pan for moist cakes. Fruit juices cause stains that can be permanent.
- Always cook with the appliance door closed.
- If the appliance is installed behind a furniture panel (e.g. a door) make sure the door is never closed when the appliance operates. Heat and moisture can build up behind a closed furniture panel and cause subsequent damage to the appliance, the housing unit or the floor. Do not close the furniture panel until the appliance has cooled down completely after use.

## 2.4 Care and cleaning

**⚠ WARNING!**

Risk of injury, fire, or damage to the appliance.

- Before maintenance, deactivate the appliance and disconnect the mains plug from the mains socket.
- Make sure the appliance is cold. There is the risk that the glass panels can break.
- Replace immediately the door glass panels when they are damaged. Contact the Authorised Service Centre.
- Be careful when you remove the door from the appliance. The door is heavy!
- Clean regularly the appliance to prevent the deterioration of the surface material.
- Clean the appliance with a moist soft cloth. Use only neutral detergents. Do not use abrasive products, abrasive cleaning pads, solvents or metal objects.
- If you use an oven spray, follow the safety instructions on its packaging.

### 2.5 Internal lighting

**⚠ WARNING!**

Risk of electric shock.

- Concerning the lamp(s) inside this product and spare part lamps sold separately: These lamps are intended to withstand extreme physical conditions in household appliances, such as temperature, vibration, humidity, or are intended to signal information about the operational status of the appliance. They are not intended to be used in other applications and are not suitable for household room illumination.
- This product contains a light source of energy efficiency class G.
- Use only lamps with the same specifications.

### 2.6 Service

- To repair the appliance contact the Authorised Service Centre.
- Use original spare parts only.

### 2.7 Disposal

**⚠ WARNING!**

Risk of injury or suffocation.

- Contact your municipal authority for information on how to dispose of the appliance.
- Disconnect the appliance from the mains supply.
- Cut off the mains electrical cable close to the appliance and dispose of it.

## 3. PRODUCT DESCRIPTION

### 3.1 General overview

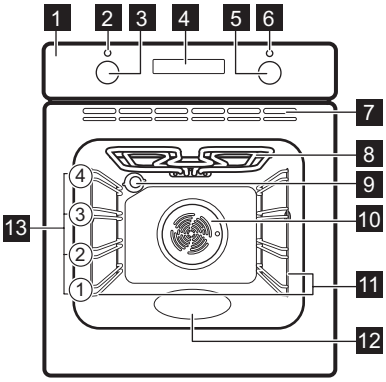


1 Control panel
2 Power lamp / symbol
3 Knob for the heating functions
4 Display
5 Control knob (for the temperature)
6 Temperature indicator / symbol
7 Air vents for the cooling fan
8 Heating element
9 Lamp
10 Fan
11 Shelf support, removable
12 Cavity embossment - Aqua cleaning container
13 Shelf positions

### 3.2 Accessories

- **Wire shelf**
  For cake tins, ovenproof dishes, roast dishes, cookware / dishes.
- **Grill- / Roasting pan**
  To bake and roast or as pan to collect fat.

## 4. CONTROL PANEL

### 4.1 Turning the appliance on and off

To turn on the appliance:

1. Press the knobs. The knobs come out.
2. Turn the knob for the heating functions to select a function.
3. Turn the control knob to adjust settings.

To turn off the appliance: turn the knob for the heating functions to the off position 0.

### 4.2 Sensor fields / Buttons

| | |
|---|---|
| — | To set the time. |
| ⏲ | To set a clock function. |
| + | To set the time. |

### 4.3 Display

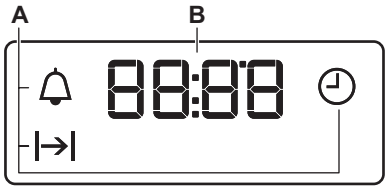


**A.** Clock functions
**B.** Timer

## 5. BEFORE FIRST USE

> ⚠ **WARNING!**
> Refer to Safety chapters.

### 5.1 Setting the time

After the first connection to the mains, wait until the display shows: **"12:00"**.

1. +, — - press to set the time.
2. ⏲ - press to confirm it or the set time of day will be saved automatically after 5 seconds.

### 5.2 Initial preheating and cleaning

Preheat the empty appliance before the first use and contact with food. The appliance can emit unpleasant smell and smoke. Ventilate the room during preheating.

1. Remove all accessories and removable shelf supports from the appliance.
2. Set the function ▭. Set the maximum temperature. Let the appliance operate for 1 h.
3. Set the function ▭. Set the maximum temperature. Let the appliance operate for 15 min.
4. Set the function ◉. Set the maximum temperature. Let the appliance operate for 15 min.
5. Turn off the appliance and wait until it is cold.
6. Clean the appliance and the accessories only with a microfibre cloth, warm water and a mild detergent.
7. Put the accessories and removable shelf supports back to their initial position.

## 6. DAILY USE

> ⚠ **WARNING!**
> Refer to Safety chapters.

### 6.1 Heating functions

| | |
|---|---|
| ☼ | **Light**<br>To turn on the lamp. |
| ▭ | **Fan Cooking**<br>To roast or roast and bake food with the same cooking temperature on more than one shelf position, without flavour transference. |
| ▭ | **Moist Fan Baking**<br>This function is designed to save energy during cooking. When you use this function, the temperature inside the appliance may differ from the set temperature. The heating power may be reduced. For more information refer to "Daily Use" chapter, Notes on: Moist Fan Baking. |

| | |
|---|---|
| | **Conventional Cooking / Aqua Clean**<br>To bake and roast food on one shelf position.<br>Refer to "Care and cleaning" chapter for more information about: Aqua Clean. |
| | **Bottom Heat**<br>To bake cakes with crispy bottom and to preserve food. |
| | **True Fan Cooking**<br>To roast meat and bake cakes. Set a lower temperature than for Conventional Cooking as the fan distributes heat evenly in the oven interior. |
| | **Grill**<br>To grill thin pieces of food and to toast bread. |
| | **Turbo Grilling**<br>To roast large meat joints or poultry with bones on one shelf position. To bake gratins and to brown. |
| | **Defrost**<br>To defrost food (vegetables and fruit). The defrosting time depends on the amount and size of the frozen food. |

### 6.2 Notes on: Moist Fan Baking

This function was used to comply with the energy efficiency class and ecodesign requirements (according to EU 65/2014 and EU 66/2014). Tests according to: IEC/EN 60350-1.

The oven door should be closed during cooking so that the function is not interrupted and the oven operates with the highest energy efficiency possible.

For the cooking instructions refer to "Hints and tips" chapter, Moist Fan Baking. For general energy saving recommendations refer to "Energy Efficiency" chapter, Energy saving tips.

### 6.3 Setting a heating function

1. Turn the knob for the heating functions to select a heating function.
2. Turn the control knob to select the temperature.
3. When the cooking ends, turn the knobs to the off position to turn off the appliance.

## 7. ADDITIONAL FUNCTIONS

### 7.1 Cooling fan

When the appliance operates, the cooling fan turns on automatically to keep the surfaces of the appliance cool. If you turn off the appliance, the cooling fan can continue to operate until the appliance cools down.

### 7.2 Safety thermostat

Incorrect operation of the oven or defective components can cause dangerous overheating. To prevent this, the oven has a safety thermostat which interrupts the power supply. The oven turns on again automatically when the temperature drops.

## 8. CLOCK FUNCTIONS

### 8.1 Clock functions table

| | |
|---|---|
| | **Time of Day**<br>To set, change or check the time of day. |
| \|→\| | **Duration**<br>To set how long the appliance works. |
| | **Minute Minder**<br>To set a countdown. This function has no effect on the operation of the appliance. You can set this function at any time, also when the appliance is off. |

### 8.2 Setting: Time of Day

1. - press repeatedly to change the time of day. - flashes.
2. +, − - press to set the time.

After approximately 5 sec, the flashing stops and the display shows the time.

- flashes when you connect the appliance to the electrical supply, when there was a power cut or when the timer is not set. +, − - press to set the time.

### 8.3 Setting: Duration

1. Set a heating function and the temperature.
2. ⏲ - press repeatedly. |→| - flashes.
3. +, — - press to set the: Duration.

The display shows |→|. |→| - flashes when the set time ends. The signal sounds and the appliance turns off.

4. Press any button to stop the signal.
5. Turn the knobs to the off position.

### 8.4 Setting: Minute Minder

1. ⏲ - press repeatedly. 🔔 - flashes.
2. +, — - press to set the time.

The function starts automatically after 5 sec. When the set time ends, the signal sounds.

3. Press any button to stop the signal.
4. Turn the knobs to the off position.

### 8.5 Cancelling: Clock functions

1. ⏲ - press repeatedly until the clock function symbol starts to flash.
2. Press and hold —.

The clock function turns off after few seconds.

## 9. USING THE ACCESSORIES

⚠ **WARNING!**

Refer to Safety chapters.

### 9.1 Inserting accessories

A small indentation at the top increases safety and provides tilt protection. The indentations are also anti-tip devices. The rim around the shelf prevents cookware from slipping off the shelf.

**Wire shelf**

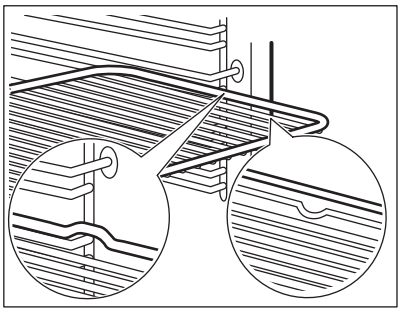

Insert the shelf between the guide bars of the shelf support and make sure that the feet point down. Make sure that the shelf touches the back of the oven interior.

**Deep pan**

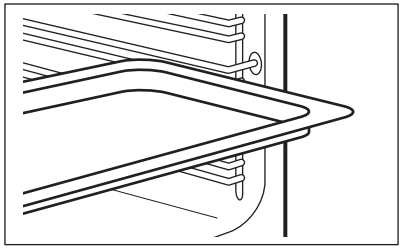

Push the tray between the guide bars of the shelf support.

## 10. HINTS AND TIPS

### 10.1 Cooking recommendations

The temperature and cooking times in the tables are for guidance only. They depend on the recipes, quality and quantity of the ingredients used.

Your appliance may bake or roast differently than your previous appliance. The hints below show recommended settings for temperature, cooking time and shelf position for specific types of the food.

Count the shelf positions from the bottom of the oven floor.

If you cannot find the settings for a specific recipe, look for a similar one.

For energy saving tips refer to "Energy efficiency" chapter.

**Symbols used in the tables:**

| | |
|---|---|
| | Food type |
| | Heating function |
| °C | Temperature |
| | Accessory |
| | Shelf position |
| | Cooking time (min) |

## 10.2 Moist Fan Baking - recommended accessories

Use dark and non-reflective tins and containers. They have better heat absorption than light colour and reflective dishes.

- **Pizza pan** - dark, non-reflective, diameter 28cm
- **Baking dish** - dark, non-reflective, diameter 26cm
- **Ramekins** - ceramic, diameter 8cm, height 5 cm
- **Flan base tin** - dark, non-reflective, diameter 28cm

## 10.3 Moist Fan Baking

For the best results follow suggestions listed in the table below.

| | | °C | | |
|---|---|---|---|---|
| Sweet rolls, 12 pieces | baking tray or dripping pan | 180 | 2 | 35 - 40 |
| Rolls, 9 pieces | baking tray or dripping pan | 180 | 2 | 35 - 40 |
| Pizza, frozen, 0.35 kg | wire shelf | 220 | 2 | 35 - 40 |
| Swiss roll | baking tray or dripping pan | 170 | 2 | 30 - 40 |
| Brownie | baking tray or dripping pan | 180 | 2 | 30 - 40 |
| Soufflè, 6 pieces | ceramic ramekins on wire shelf | 200 | 3 | 30 - 40 |
| Sponge flan base | flan base tin on wire shelf | 170 | 2 | 20 - 30 |
| Victoria sandwich | baking dish on wire shelf | 170 | 2 | 35 - 45 |
| Poached fish, 0.3 kg | baking tray or dripping pan | 180 | 3 | 35 - 45 |
| Whole fish, 0.2 kg | baking tray or dripping pan | 180 | 3 | 35 - 45 |
| Fish fillet, 0.3 kg | pizza pan on wire shelf | 180 | 3 | 35 - 45 |
| Poached meat, 0.25 kg | baking tray or dripping pan | 200 | 3 | 40 - 50 |
| Shashlik, 0.5 kg | baking tray or dripping pan | 200 | 3 | 25 - 35 |
| Cookies, 16 pieces | baking tray or dripping pan | 180 | 2 | 20 - 30 |
| Macaroons, 20 pieces | baking tray or dripping pan | 180 | 2 | 40 - 45 |
| Muffins, 12 pieces | baking tray or dripping pan | 170 | 2 | 30 - 40 |

| | | °C | | |
|---|---|---|---|---|
| Savory pastry, 16 pieces | baking tray or dripping pan | 170 | 2 | 35 - 45 |
| Short crust biscuits, 20 pieces | baking tray or dripping pan | 150 | 2 | 40 - 50 |
| Tartlets, 8 pieces | baking tray or dripping pan | 170 | 2 | 20 - 30 |
| Vegetables, poached, 0.4 kg | baking tray or dripping pan | 180 | 3 | 35 - 40 |
| Vegetarian omelette | pizza pan on wire shelf | 200 | 3 | 30 - 45 |
| Mediterranean vegetables, 0.7 kg | baking tray or dripping pan | 180 | 4 | 35 - 40 |

### 10.4 Information for test institutes

Tests according to IEC 60350-1.

| | | | | °C | |
|---|---|---|---|---|---|
| Small cakes, 16 per tray | Conventional Cooking | Baking tray | 3 | 170 | 20 - 35 |
| Small cakes, 16 per tray | True Fan Cooking | Baking tray | 3 | 160 | 20 - 35 |
| Small cakes, 16 per tray | True Fan Cooking | Baking tray | 1 and 3 | 160 | 20 - 35 |
| Apple pie, 2 tins Ø20 cm | Conventional Cooking | Wire shelf | 1 | 170 | 70 - 90 |
| Apple pie, 2 tins Ø20 cm | True Fan Cooking | Wire shelf | 2 | 160 | 70 - 90 |
| Sponge cake, cake mould Ø26 cm | Conventional Cooking | Wire shelf | 2 | 170 | 35 - 45 |
| Sponge cake, cake mould Ø26 cm | True Fan Cooking | Wire shelf | 2 | 160 | 35 - 45 |
| Short bread **1)** | Conventional Cooking | Baking tray | 3 | 150 | 20 - 35 |
| Short bread **1)** | True Fan Cooking | Baking tray | 3 | 150 | 20 - 35 |
| Toast **1)** | Grill | Wire shelf | 3 | max. | 1 - 5 |

**1)** Preheat the appliance for 10 minutes.

## 11. CARE AND CLEANING

⚠ **WARNING!**
Refer to Safety chapters.

### 11.1 Notes on cleaning

**Cleaning Agents**

- Clean the front of the appliance only with a microfibre cloth with warm water and a mild detergent. Clean and check the door gasket around the frame of the cavity.
- Use a cleaning solution to clean metal surfaces.
- Clean stains with a mild detergent.

**Everyday Use**

- Clean the interior of the appliance after each use. Fat accumulation or other residue may cause fire.
- Moisture can condense in the appliance or on the door glass panels. To decrease the condensation, let the appliance work for 10 minutes before cooking. Do not store food in the appliance for longer than 20 minutes. Dry the interior of the appliance only with a microfibre cloth after each use.

**Accessories**

- Clean all accessories after each use and let them dry. Use only a microfibre cloth with warm water and a mild detergent. Do not clean the accessories in a dishwasher.
- Do not clean the non-stick accessories using abrasive cleaner or sharp-edged objects.

## 11.2 Removing the shelf supports

Remove the shelf supports to clean the appliance.

1. Turn off the appliance and wait until it is cold.
2. Pull the front of the shelf support away from the side wall.
3. Pull the rear end of the shelf support away from the side wall and remove it.

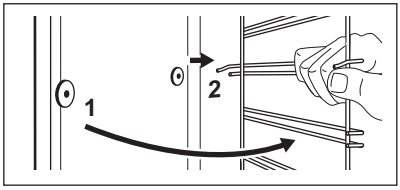


4. Install the shelf supports in the opposite sequence.

## 11.3 Aqua Clean

This cleaning procedure uses humidity to remove remaining fat and food particles from the appliance.

1. Pour water into the cavity embossment: 150 ml.
2. Set the function .
3. Set the temperature to 90 °C.
4. Let the appliance work for 30 min.
5. Turn off the appliance.
6. Wait until the appliance is cold. Dry the cavity with a soft cloth.

## 11.4 Removing and installing door

The oven door has two glass panels. You can remove the oven door and the internal glass panel to clean it. Read the whole "Removing and installing door" instruction before you remove the glass panels.

**⚠ CAUTION!**

Do not use the appliance without the glass panels.

1. Open the door fully and hold both hinges.

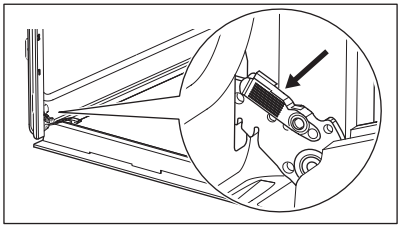

2. Lift and pull the latches until they click.

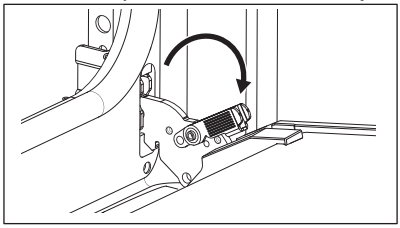

3. Close the oven door halfway to the first opening position. Then lift and pull to remove the door from its seat.

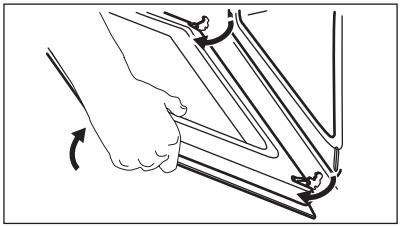

4. Put the door on a soft cloth on a stable surface and release the locking system to remove the internal glass panel.

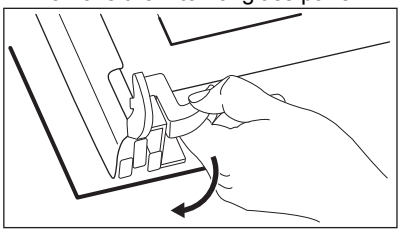

5. Turn the fasteners by 90° and remove them from their seats.

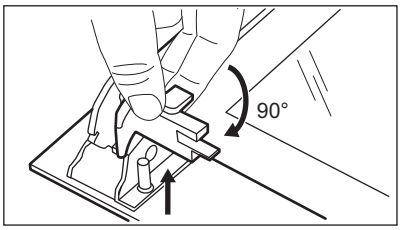


6. First lift carefully and then remove the glass panel.

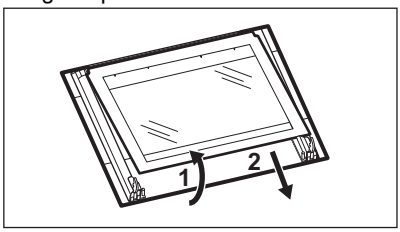


7. Clean the glass panels with water and soap. Dry the glass panels carefully. Do not clean the glass panels in the dishwasher.
8. After cleaning, install the glass panel and the oven door.

If the door is installed correctly, you will hear a click when closing the latches.
When installed correctly, the door trim clicks.

Make sure that you install the internal glass panel **A** in the seats correctly.

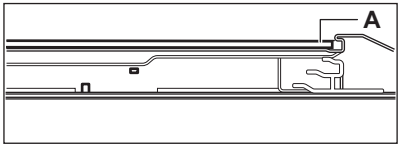


### 11.5 Replacing the lamp

> ⚠ **WARNING!**
> Risk of electric shock.
> The lamp can be hot.

1. Turn off the appliance and wait until it is cold.
2. Disconnect the appliance from the mains.
3. Place the cloth on the oven floor.

#### Back lamp

1. Turn the glass cover to remove it.
2. Clean the glass cover.
3. Replace the lamp with a suitable 300 °C heat-resistant lamp.
4. Install the glass cover.

## 12. TROUBLESHOOTING

> ⚠ **WARNING!**
> Refer to Safety chapters.

### 12.1 What to do if...

In any cases not included in this table please contact an Authorised Service Centre.

| Problem | Cause and remedy |
|---|---|
| The appliance does not heat up. | The fuse is blown. Make sure that the fuse is the cause of the malfunction. If the problem persists, contact a qualified electrician. |
| The door gasket is damaged. | Do not use the appliance. Contact an Authorised Service Centre. |
| The display shows "12.00". | There was a power cut. Set the time of day. |

| Problem | Cause and remedy |
|---|---|
| The lamp does not work. | The lamp is burnt out. Replace the lamp. Refer to "Care and cleaning", Replacing the lamp. |

### 12.2 Service data

If you cannot find a solution to the problem yourself, contact your dealer or an Authorised Service Centre.

The necessary data for the service centre is on the rating plate. The rating plate is located on the front frame of the appliance. It is visible when you open the door. Do not remove the rating plate from the appliance.

**We recommend that you write the data here:**

| |
|---|
| Model (MOD.) : |
| Product number (PNC): |
| Serial number (S.N.): |

## 13. ENERGY EFFICIENCY

### 13.1 Product Information Sheet and Product Information according to EU Energy Labelling and Ecodesign Regulations

| | |
|---|---|
| Supplier's name | Electrolux |
| Model identification | EOF5H40BX 944068240 |
| Energy Efficiency Index | 95.1 |
| Energy efficiency class | A |
| Energy consumption with a standard load, conventional mode | 0.89 kWh/cycle |
| Energy consumption with a standard load, fan-forced mode | 0.78 kWh/cycle |
| Number of cavities | 1 |
| Heat source | Electricity |
| Volume | 65 l |
| Type of oven | Built-In Oven |
| Mass | 29.3 kg |

IEC/EN 60350-1 - Household electric cooking appliances - Part 1: Ranges, ovens, steam ovens and grills - Methods for measuring performance.

### 13.2 Product Information for power consumption and maximum time to reach applicable low power mode

| | |
|---|---|
| Power consumption in standby | 0.8 W |
| Maximum time needed for the equipment to automatically reach the applicable low power mode | 20 min |

### 13.3 Energy saving tips

Following tips below will help you save energy when using your appliance.

Make sure that the appliance door is closed when the appliance operates. Do not open the appliance door too often during cooking.

Keep the door gasket clean and make sure it is well fixed in its position.

Use metal cookware and dark, non-reflective tins and containers to improve energy saving.

Do not preheat the appliance before cooking unless specifically recommended.

Keep breaks between baking as short as possible when you prepare a few dishes at one time.

**Cooking with fan**
When possible, use the cooking functions with fan to save energy.

**Residual heat**
When the cooking duration is longer than 30 min, reduce the appliance temperature to minimum 3 - 10 min before the end of cooking. The residual heat inside the appliance will continue to cook.

Use the residual heat to keep the food warm or warm up other dishes.

**Keep food warm**
Choose the lowest possible temperature setting to use residual heat and keep the food warm.

**Moist Fan Baking**
Function designed to save energy during cooking.

## **14.** ENVIRONMENTAL CONCERNS

Recycle materials with the symbol ♺. Put the packaging in relevant containers to recycle it. Help protect the environment and human health by recycling waste of electrical and electronic appliances. Do not dispose of appliances marked with the symbol  with the household waste. Return the product to your local recycling facility or contact your municipal office.

electrolux.com

867368998-C-212024

