AKR 355/IX

12NC: 857835538700

GTIN (EAN) code: 8003437933417



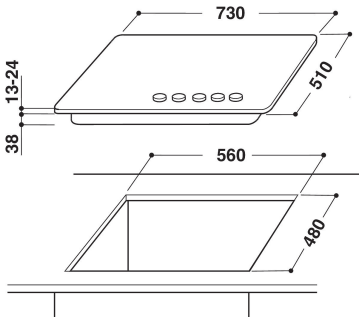

MAIN FEATURES

Product group	Hob
Construction type	Built-in
Type of control	Mechanical
Type of control settings	N/A
Number of gas burners	5
Number of electric cooking zones	0
Number of electric plates	0
Number of radiant plates	0
Number of halogen plates	0
Number of induction plates	0
Number of electric warming zones	0
Location of control panel	Front
Basic surface material	Inox
Main colour of product	Inox
Electrical connection rating (W)	0
Gas connection rating (W)	10500
Current (A)	0,6
Voltage (V)	230
Frequency (Hz)	50
Length of Electrical Supply Cord (cm)	85
Plug type	No
Gas connection	Cilindric
Width of the product	730
Height of the product	40
Depth of the product	510
Minimum niche height	20
Minimum niche width	560
Niche depth	480
Net weight (kg)	9.8
Automatic programmes	No

TECHNICAL FEATURES

Power on indicator	No
Number of indicators	0
Type of regulation	Rapid
Type of lid	Glass
Residual heat indicator	Without
Main on/off switch	No
Safety device	Yes
Timer	No

PERFORMANCES

Energy input	Gas